Hurricane and Storm Damage Risk Reduction System Design Guidelines

INTERIM

New Orleans District Engineering Division
With Revisions through June 2012



US Army Corps of Engineers®

UPDATED 04 JUN 12

CONTENTS

INTRODUCTION xi

PART A: DESIGN GUIDELINES

1.0 HYDRAULICS
1.1 Design Philosophy for Preliminary Design of Hurricane and Storm Damage Reduction System 1-1
1.2 In put Data and Methods for Design Approach 1-3
1.2.1 JPM-OS Process 1-3
1.2.2 Modeling Process 1-4
1.2.3 Frequency Analysis 1-5
1.2.4 Wave Overtopping 1-9
1.2.5 Wave Forces 1-10
1.3 Step-wise Design Approach 1-11
1.3.1 Use of 1% Values for Surge Elevation and Waves 1-11
1.3.2 Simultaneous Occurrence of Maxima 1-11
1.3.3 Breaker Parameter 1-13
1.3.4 Overtopping Criteria 1-13
1.3.5 Dealing with Uncertainties 1-14
1.3.6 Step-wise Approach 1-19
1.4 Design Conditions 1-20
1.4.1 Existing Conditions 1-21
1.4.2 Future Conditions 1-21
1.5 Design Elevations and Loads 1-23
1.6 Armoring 1-23
1.6.1 Introduction 1-23
1.6.2 Levee Armoring 1-24
1.6.2.1 Turf Design 1-26
1.6.2.2 Turf Reinforcement 1-27
1.6.3 Walls and Levee Transitions 1-27
1.6.4 On-going Studies 1-28

2.0 RELOCATIONS

2.1 Facility Relocations 2-1
2.2 Deliverables And Project Schedule 2-2
2.3 Utility Relocations Questionnaires 2-2

3.0 GEOTECHNICAL

3.1 Design Procedure for Earthen Embankments 3-1
3.1.1 Sampling of References 3-1
3.1.1.1 Strengthlines 3-3
3.1.1.2 Slope Stability Design Criteria 3-4
3.1.1.3 Reserved 3-7
3.1.2 Levee Embankment Design 3-7
3.1.3 Seepage Analysis 3-9
3.1.3.1 Definitions 3-9
3.1.3.2 Design Assumptions and Considerations 3-10
3.1.3.3 Calculation of Underseepage Factors of Safety 3-11
3.2 I-Wall Design Criteria 3-14
3.2.1 General Design Guidance 3-14
3.2.1.1 Global Stability Analysis 3-15
3.2.1.2 I-Wall Sheet Piling Tip Penetration 3-16
3.2.1.3 Piping and Seepage Analysis 3-18
3.2.1.4 Heave Analysis 3-20
3.2.1.5 Deflections 3-20
3.3 Axial Pile Capacity 3-21
3.3.1 Lateral Pile Capacity 3-24
3.3.1.1 Monotonic Lateral Load Testing 3-24
3.3.1.2 Cyclic Lateral Load Testing 3-26
3.3.2 Effects of Settlement on Piles 3-26
3.3.2.1 Downdrag and Drag Load Guidance for Pile Founded Structures 3-26
3.3.2.2 Settlement Induced Bending 3-32
3.3.3 Pile Drivability 3-33
3.3.4 Pile Tests 3-33
3.3.5 Interpretation of the Results of a Pile Load Test 3-34
3.3.6 Pile Group Capacity 3-35
3.4 T-Wall and L-Wall/Kicker Pile Wall Design Criteria 3-36
3.4.1 Sampling of References 3-36
3.4.2 Geotechnical Design Guidance 3-37
3.4.2.1 Global Stability Analysis 3-37
3.4.2.2 T-Wall Sheet Piling Cut-off Tip Penetration 3-38
3.4.2.3 L-Wall Sheet Piling Tip Penetration 3-38
3.4.2.4 T-Wall and L-Wall Pile Foundation Tip Penetration 3-39
3.4.2.5 Piping and Seepage Analysis 3-39
3.4.2.6 Heave Analysis 3-40
3.4.3 T-Wall Design Procedure 3-40
3.4.3.1 Description 3-40
3.4.3.2 Sector Gate and Drainage Structure Foundation Analysis 3-43

3.4.3.3 Fronting T-walls with Trailing Structures 3-43
3.4.3.4 Design Examples 3-45
3.5 Levee Tie-ins and Overtopping Scour Protection 3-57
3.6 Utility Crossing 3-57
3.6.1 Directional Drilling 3-57
3.6.1.1 Layout 3-58
3.6.1.2 Design Criteria 3-58
3.6.1.3 Guidelines for Permit Review 3-59
3.6.1.4 Drilling Operations 3-59
3.6.1.5 Construction Schedule 3-60
3.6.1.6 Monitoring and Liability for Damages 3-60
3.6.2 Structural Elevated Support 3-62
3.6.3 T-Wall Construction 3-62
3.6.4 Direct Contact Method 3-62
3.7 Borrow Specifications 3-64
3.7.1 Material 3-64
3.7.2 Quality Control 3-64
3.7.3 Construction 3-67

4.0 LEVEES
4.1 Sampling of References 4-1
4.2 Preliminary Work 4-1
4.2.1 Develop Project Delivery Schedule 4-1
4.2.2 Initial Project Site Visit 4-1
4.2.3 Preliminary Requests to PDT 4-1
4.3 Project Delivery Work 4-1
4.3.1 Request for Initial Engineering Input from PDT 4-1
4.3.2 Construction Solicitation Documents Preparation 4-2
4.3.2.1 Initiate Final Requests for Engineering Input into Construction Solicitation Documents 4-2
4.3.2.2 Right of Entry for Construction 4-2
4.3.2.3 Construction Solicitation Documents 4-3
4.4 Engineering Input for NEPA 4-4
4.4.1 Description of Work 4-4
4.4.2 Maps and Drawings 4-4
4.4.3 Borrow Material 4-5

5.0 STRUCTURES

5.1 In General 5-1
5.1.1 Sampling of References 5-1
5.1.2 Survey Criteria 5-2
5.1.3 General Design Criteria 5-2
5.2 T-wall & L-wall Design Criteria 5-4
5.2.1 Loading Conditions 5-5
5.2.2 Pile Foundations – Precast-Prestressed Concrete, Steel (H and Pipe) and Timber 5-8
5.2.2.1 Pile Design 5-8
5.2.2.2 Pile Tension Connectors 5-13
5.2.2.3 Pile Splices 5-15
5.2.2.4 Pile Handling 5-17
5.2.3 T-Wall Sheet Piling Section 5-18
5.2.4 L-Wall Sheet Piling Section 5-18
5.2.5 Sheet Piling Tip Penetration 5-18
5.3 I-wall Design Criteria 5-18
5.3.1 Loading Conditions 5-18
5.3.2 I-wall Sheet Piling Section 5-19
5.3.3 I-wall Sheet Piling Tip Penetration 5-20
5.3.4 Reinforced Concrete Section 5-20
5.4 Temporary Retaining Structure (TRS) Design Criteria 5-20
5.4.1 General Notes (Flood Protection) 5-20
5.4.2 Sheet Piling Section (for Non-Flood Protection) 5-21
5.4.3 General Notes (for Non-Flood Protection) 5-21
5.4.4 References 5-21
5.5 Reinforced Concrete Design Criteria 5-22
5.5.1 Structural Concrete 5-22
5.5.2 Steel Reinforcing 5-22
5.5.3 Load Factors 5-22
5.5.4 Steel Requirements 5-23
5.5.5 Concrete Requirements 5-23
5.5.6 Lap Splices 5-24
5.5.7 Prestress Concrete 5-24
5.5.8 General Notes 5-25
5.6 Miscellaneous 5-25
5.6.1 Material Unit Weights 5-25
5.6.2 Loading Considerations 5-25
5.6.3 Structural Steel Design 5-27
5.6.4 Steel Sheet Pile Design 5-28
5.6.5 Gate Design 5-28
5.6.5.1 Concrete Monolith 5-28
5.6.5.2 Steel Gates 5-28
5.6.6 General Design Considerations 5-30
5.6.7 Utility Crossings 5-30
5.6.8 Corrosion Protection 5-30

5.6.9 Levee Tie-ins, Transitions and Scour Protection 5-33
5.6.10 Expansion Joints 5-34
5.6.11 Waterstops 5-34
5.7 Basic Load Case Tables 5-34
5.8 Impact Barriers 5-38
5.9 Loading Tables & Impact Maps 5-39

6.0 MECHANICAL & ELECTRICAL
6.1 Sampling of References 6-1
6.2 Mechanical 6-1
6.3 Electrical 6-2

PART B: STANDARDS

7.0 UTILITY RELOCATIONS QUESTIONNAIRES

7.1 Company Information 7-1
7.2 Communication Lines 7-3
7.3 Highway Bridges 7-4
7.4 Navigation Lights 7-4
7.5 Conveyor Shafts 7-5
7.6 Pipelines 7-6
7.7 Powerlines 7-7
7.8 Railroad Bridges 7-8

8.0 GEOTECHNICAL INVESTIGATIONS

8.1 Contractor Requirements 8-1
8.1.1 Field Assignments 8-1
8.1.2 Office and Laboratory Assignments 8-1
8.1.3 Quality Assurance 8-1
8.1.4 Government Furnished Materials 8-2
8.2 Subsurface Investigations 8-2
8.2.1 Locating and Setting-Up for Borings 8-2
8.2.2 Sampling of Borings 8-2
8.2.2.1 Shelby Tube Sampling 8-3
8.2.2.2 Sample Storage, Extrusion and Shipment …..... 8-3
8.2.2.3 Backfilling of Borehole 8-3
8.3 Laboratory Soil Testing 8-4
8.3.1 Laboratory Facilities 8-4
8.3.2 Soil Classification 8-4
8.3.3 General Soils Testing 8-5
8.3.4 Compressive Strength Tests 8-5
8.3.4.1 Unconfined Compression Tests 8-5
8.3.4.2 Triaxial Shear Tests 8-5
8.3.5 Consolidation Testing 8-6
8.3.6 Logging and Reporting 8-6

9.0 SURVEYS

9.1 Survey Standards Manual 9-1
9.1.1 Purpose 9-1
9.1.2 Applicability 9-1
9.1.3 Use of Manual 9-1
9.2 Quality Assurance 9-1
9.2.1 Survey Plan 9-1
9.2.2 Survey Report 9-2
9.2.3 Submittal Format 9-2
9.3 Adherence to IPET Report Lessons Learned 9-3
9.3.1 Metadata Embedded Dataset Specification 9-3
9.3.2 Dual Elevations on Flood Control and Hurricane Protection Structures ... 9-3

9.3.3 Geospatial Data Source Feature or Metadata Records 9-3
9.3.4 Epoch Designations of Published Topographic Elevations 9-3
9.3.5 Definitions of NGVD29, NAVD88, Mean Sea Level, and Local Mean Sea Level 9-4
9.3.6 Coordination of Topographic Survey Data Collection, Processing, and Management 9-4
9.3.7 Vertical Control Monumentation Requirements and Stakeout Procedures on Flood Control Construction Projects 9-4
9.3.8 LIDAR and Photogrammetric Mapping Calibration and Testing 9-4
9.4 Typical Scope of Services for Structural Design Projects 9-5
9.4.1 Vertical and Horizontal Control 9-5
9.4.2 Boundary Surveys 9-5
9.4.3 Topographic Surveys 9-5
9.4.4 Cross-Sections and Profiles 9-5
9.4.4.1 Major Structure Site 9-5
9.4.4.2 Levee and Floodwall Sites 9-6

10.0 CADD STANDARDS
10.1 General 10-1
10.2 Applicability 10-1
10.3 CADD Standards 10-1
10.4 File Names and Drawing Numbers 10-1
10.5 Platforms 10-2
10.6 Deliverables 10-2
10.7 Drawing Development Documentation 10-3
10.8 Ownership 10-4

11.0 SIGNATURES 11-1

12.0 TYPICAL DRAWINGS AND DETAILS
General Notes 12-1
Miscellaneous Details 12-2
Compression Pile Test 12-3
Tension Pile Test 12-4
Concrete Pile Details Low-Relaxation Strands 12-5
Concrete Pile Details Stress-Relieved Strands 12-6
Sheet Pile Details 12-7
Utilities – A 12-8
Utilities – B 12-9
Utilities – C 12-10
Utilities Gas and Petroleum Option 1 12-11
Utilities Gas and Petroleum Option 2 12-12
Typical Wall Joints 12-13
Typical Wall Joints Alternate – Masonry 12-14
Typical Wall Joints Alternate – Reinforcement 12-15
Typical Wall Joints 12-16

Typical Joint Details 12-17
Swing Gate Hinge Details 12-18
Swing Gate Seal Details 12-19
Swing Gate 12-20
Swing Gate Monolith 12-21
Bottom Roller Gate Sections 12-22
Bottom Roller Gate 12-23
Bottom Roller Gate Monolith Sections 12-24
Bottom Roller Gate Seal Details 12-25
Bottom Roller Gate Latching Details 12-26
Bottom Roller Gate Details, Swing Gate Corner Details …..... 12-27
Clearance Requirements for Utilities and Pile-Founded Structures
Built Within Perpetual Floodwall Servitude 12-28

13.0 SPECIFICATIONS
13.1 Sampling of References 13-1
13.2 In General 13-1

APPENDIXES
A. LIST OF ACRONYMS
B. LINKS TO REFERENCES
C. SAMPLE SCOUR PROTECTION DETAILS
D. EXTRACT FROM DRAFT SCOUR STUDY
E. T-WALL DESIGN EXAMPLES
F. INTERIM GUIDANCE, REVISED "LPILE METHOD" TO CALCULATE BENDING MOMENTS IN BATTER PILES FOR T-WALLS SUBJECT TO DOWNDRAG

LIST OF FIGURES

Figure 1.1 Map of existing projects and studies 1-2
Figure 1.2 Different components and their interaction in the JPM-OS Process 1-3
Figure 1.3 Numerical results at Lake Pontchartrain and MRGO from ADCIRC and STWAVE 1-7
Figure 1.4 Frequency curves of the wave height and wave period at Lake Pontchartrain based on the STWAVE results and the JPM-OS method 1-8
Figure 1.5 Definition sketch of wave force calculations 1-10
Figure 1.6 Time histories of surge elevation and wave characteristics during storm 27 at Lake Pontchartrain and at Lake Borgne 1-12
Figure 1.7 The 50% and 90% confidence limit value of the overtopping rate as a function of the number of simulations during the Monte Carlo Analysis 1-18
Figure 1.8 Result of Monte Carlo Analysis for Jefferson Lakefront levee 1-19
Figure 1.9 Estimated relative sea level rise during 100 year 1-21
Figure 3.1 Boring spacing 3-1
Figure 3.2 Minimum distance between active and passive wedges (embankments) 3-6
Figure 3.3 Minimum tip penetration depth 3-13
Figure 3.4 Computed crack depth near aquifer 3-14
Figure 3.5 Computed heave factor of safety 3-12
Figure 3.6 Values of adhesion factor (α) vs. undrained shear strength 3-23
Figure 3.7 Typical failure plane beneath a T-wall 3-12
Figure 3.8 Determination of unbalanced load 3-12
Figure 3.9 Example of computation of ultimate shear load in the pile from a load vs. deflection curve developed using LPILE 3-23
Figure 3.10 Unbalanced Forces 3-12
Figure 3.11 Spacing between piles 3-27
Figure 3.12 Area for soil flow-through shear check 3-12
Figure 3.13 Ultimate lateral load capacity of short and long piles in cohesionless soils (Broms, 1964) 3-12
Figure 3.14 Sample detail of repair of directional drilling damage to levee 3-35
Figure 4.1 Sample Survey Request Form 4-6
Figure 5.1 Typical T-Wall and L-Wall configuration 5-4
Figure 5.2 Depth of pile embedment 5-6
Figure 5.3 Typical I-Wall configuration 5-8
Figure 5.4 Impervious Sheet Pile Cut-off 5-21
Figure 5.5 Pervious Sheet Pile Cut-off 5-21
Figure 5.6 Boat/Barge Impact Map (St. Charles – Jefferson) 5-24
Figure 5.7 Boat/Barge Impact Map (New Orleans) 5-25
Figure 5.8 Boat/Barge Impact Map (Westbank) 5-26
Figure 5.9 Boat/Barge Impact Map (Plaquemines Parish) 5-27
Figure 8.1 LMN Form 721 8-7

Figure 8.2 ENG Forms 1742 & 1743 8-8
Figure 8.3 WES Form 819 8-9
Figure 8.4 Unified Soil Classification System 8-10
Figure 8.5 Unified Soil Classification System Modified for
New Orleans Soils 8-11

LIST OF TABLES

Table 1.1 Input for Monte Carlo Analysis 1-17
Table 1.2 Future conditions for surge level and wave characteristics 1-22
Table 3.1 Slope stability design factors of safety 3-3
Table 3.2 Typical values for embankment fill 3-12
Table 3.3 Typical values for silts, sands, and riprap 3-7
Table 3.4 Criteria for safety against erosion and piping at toe of levee 3-34
Table 3.5 Criteria of safety against erosion and piping at the toes of seepage berms for all riverine and coastal levees 3-33
Table 3.6 Reserved .....
Table 3.7 Recommended minimum factor of safety axial pile capacity 3-33
Table 3.8 Q-case soil dependent pile design coefficients 3-16
Table 3.9 S-case Soil Dependent Pile Design Coefficients 3-16
Table 3.10 Lateral Earth Pressure Coefficients for Pile Design 3-34
Table 3.11 Angles of Friction Between Soil and Pile (δ) 3-12
Table 5.1 General Load Cases 5-18
Table 5.2 Basic Load Case Combinations & Design Checks 5-23

INTRODUCTION

Hurricanes Katrina and Rita caused tremendous loss of life and destruction of property when they struck coastal Louisiana in 2005. The US Army Corps of Engineers and the New Orleans District continue to investigate the shortcomings of the hurricane and storm damage reduction system. Engineers are working to learn what happened and to make appropriate and effective changes and improvements in the planning, design, construction, operation and maintenance of hurricane protections to prevent future disasters to the greatest extent possible.

Several efforts to restore, repair and improve the hurricane and storm damage reduction system in coastal Louisiana have been completed or are currently underway. The Chief of Engineering Division, New Orleans District, directed the preparation of this compilation of design guidelines to provide a comprehensive collection of best practices for those engaged in these projects.

This guide is presented in two parts. The first part, "Design Guidelines," presents methods and criteria that shall be used by engineers in the design of hurricane system components. The design methods and criteria presented in this report should not be considered final. As new information is continuously discovered and design techniques always evolve, updates will be issued. Engineers are encouraged to consult with appropriate subject matter experts for updates and improvements to the procedures and criteria presented herein.

The second part of this guide is a compilation of "Standards" used by the New Orleans District. This includes requirements for surveys and typical details for common construction elements. While exceptions and variations for specific projects are likely to arise, engineers working on projects for the District should follow the standards as presented as much as possible.

A list of acronyms and links to referenced and other common publications is provided to assist engineers in their work.

Questions, corrections or suggestions should be submitted in writing for review and action. The Engineering Division Point of Contact is Timothy M. Ruppert, P.E. at Timothy.M.Ruppert@usace.army.mil.

UPDATED 04 OCT 07

PART A:
DESIGN GUIDELINES

1.0 HYDRAULICS

1.1 Design Philosophy for Preliminary Design of Hurricane Protection System

This chapter presents the hydraulic design approach to determine protection system design elevations sufficient to provide protection from a hurricane event that would produce a 1% exceedence surge elevation and associated waves. This surge elevation has a one-percent chance of being equaled or exceeded during any year. The protection system design elevations, referenced in this document as the 1% exceedence design elevations, have been developed for two authorized hurricane protection projects in the New Orleans area: Lake Pontchartrain, LA & Vicinity; and West Bank & Vicinity (see Figure 1.1).

An extensive USACE/FEMA internal review and ASCE external review has been conducted on the approach during the period March through August 2007. The review documents can be found in USACE/FEMA South East Louisiana Joint Surge Study Independent Technical Review (Draft report 15 August 2007) and ASCE One percent Review Team (OPRT), Report Number 1 (31 May 2007) and 2 (30 July 2007).

Initial design elevations for Lake Pontchartrain, LA & Vicinity; and West Bank & Vicinity projects can be found in the report, "Elevations for Design of Hurricane Protection Levees and Structures," dated September 2007. Hydraulic design and analysis associated with upcoming investigations will be documented in engineering analysis reports and also in addenda to the report. All hydraulic analyses associated with the two protection systems can be found in one comprehensive document.

To assure continuity of design methodology and provide close quality management, final design elevations utilized throughout the New Orleans area will be reviewed by the New Orleans District Engineering Division Chief of Hydraulics and Hydrologic Branch.

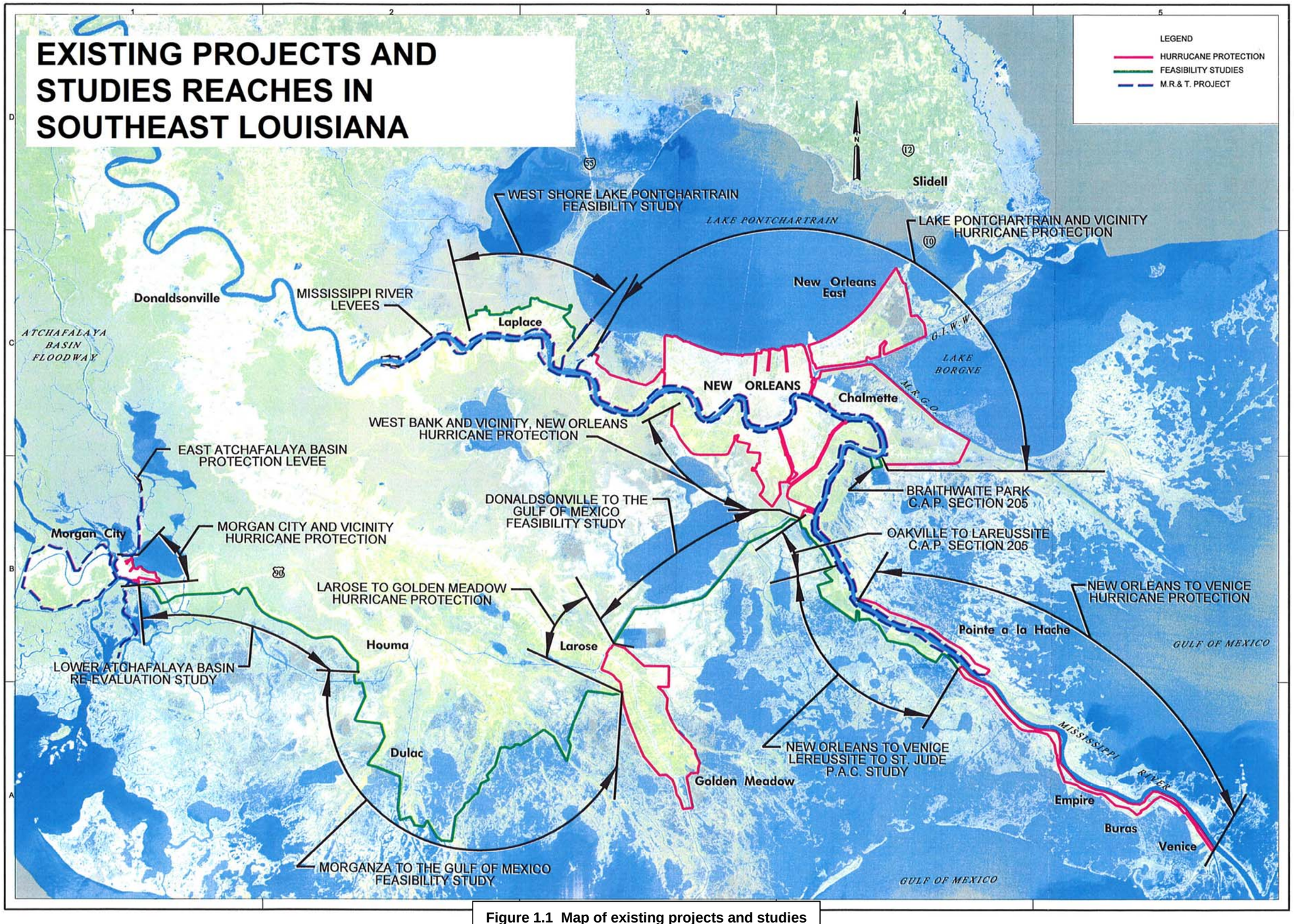

Figure 1.1 Map of existing projects and studies

1.2 Input Data and Methods for Design Approach

1.2.1 JPM-OS process

In 2006 and 2007, a team of Corps of Engineers, FEMA, NOAA, private sector, and academia developed a new process for estimating hurricane inundation probabilities, the Joint Probability Method with Optimal Sampling process (JPM-OS), see Resio (2007). This work was initiated for the Louisiana Coastal Protection and Restoration study (LACPR), but now is being applied to Corps work under the 4th supplemental appropriation, Interagency Performance Evaluation Team (IPET) risk analysis, and FEMA Base Flood Elevations for production of DFIRMs for coastal Louisiana and Texas. The Corps and FEMA work use the same model grids, the same model software, the same model input, such as wind fields, and the same method for estimating hurricane inundation probabilities. The JPM-OS process is shown in Figure 1.2. A more detailed description of the process and the modeling can be found in the White Paper, "Estimating Hurricane Inundation Probabilities" and documents prepared for FEMA for the coastal base flood elevation work.

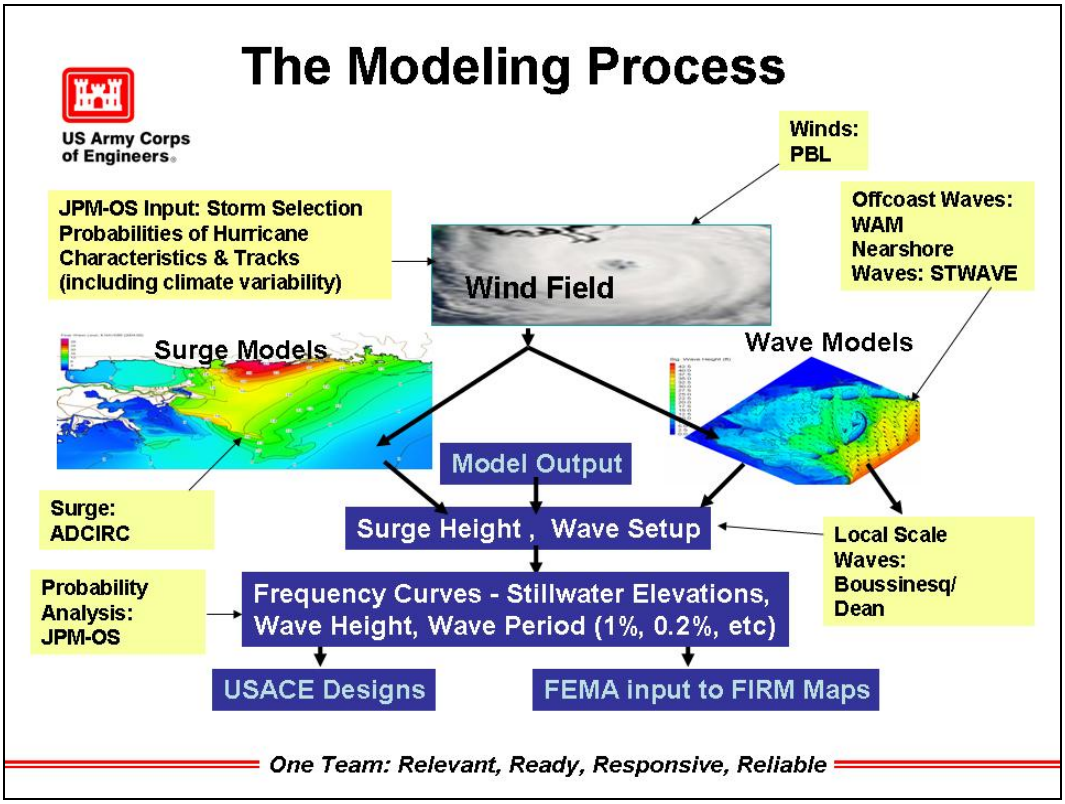

Figure 1.2 – The different components and their interaction in the JPM-OS Process

1.2.2 Modeling process

The following models are used in the JPM-OS process:

PBL – Planetary Boundary Layer Model. A marine planetary boundary layer model which links marine wind profiles to large scale pressure gradients and thermal properties has been developed by Oceanweather, Inc. Oceanweather, Inc is an internationally known company serving the international shipping, offshore industry and coastal engineering communities.

ADCIRC – Advanced Circulation Model. The ADCIRC model is used for the surge modeling. ADCIRC was developed by the ADCIRC Development Group which includes representatives from the University of North Carolina, the University of Oklahoma, the University of Notre Dame, and the University of Texas. The New Orleans District (MVN) is a development partner with the ADCIRC Development Group. The ADCIRC Model is a state-of-the-art model that solves the generalized wave-continuity equation on linear triangular elements. For the coastal Louisiana modeling, the finite element grid contains approximately 2.1 million horizontal nodes and 4.2 million elements.

WAM - The global ocean WAve prediction Model called WAM is a third generation wave model developed by the Corps of Engineers Coastal and Hydraulics Laboratory (CHL). WAM is used for offshore waves and boundary conditions for the nearshore wave modeling. WAM predicts directional spectra as well as wave properties such as significant wave height, mean wave direction and frequency, swell wave height and mean direction, and wind stress fields corrected by including the wave induced stress and the drag coefficient at each grid point at chosen output times.

STWAVE – Steady State Spectral Wave Model. STWAVE is a nearshore wave model developed by CHL. For the JPM-OS effort, STWAVE is used to generate the nearshore wave heights and wave periods using boundary conditions from the WAM modeling. The WAM-to-STWAVE procedure is applied for each storm. For the analyses completed to date, the STWAVE model did not include frictional effects.

The JPM-OS modeling process is as follows (see also Figure 1.2). The PBL model is used to generate the wind fields required in the JPM-OS process. For each storm, the PBL model is used to construct 15-minute snapshots of wind and pressure fields for driving the surge and wave models. ADCIRC, WAM, and STWAVE model runs are performed on high speed computers at the Corps of Engineers Engineering Research and Development Center (ERDC) in Vicksburg, MS, the Lonestar computer at University of Texas, and similar computers. With all major rivers already “spun up”, the surge model ADCIRC is initiated assuming zero tide. The spectral deep water wave model WAM is run, in parallel with the initial ADCIRC run, to establish the directional wave spectra that serve as the

boundary conditions for the near-coast wave model, STWAVE. The STWAVE model is used to produce the wave fields and estimated radiation stress fields. These stress fields, added to the PBL estimated wind stresses, are used in the ADCIRC model for the time period during which the radiation stress makes a significant contribution to the water levels.

Two conditions of the hurricane protection system have been modeled with ADCIRC/STWAVE for design purposes: 2007 condition and 2010 condition. The **2007 condition** considers the interim gates and closures at the three outfall canals and levees and floodwalls constructed to pre-Katrina authorized elevations. The **2010 condition** considers the permanent gates and closures at the three outfall canals, the gate on the GIWW/MRGO, and levees and floodwalls constructed to elevations at or greater than the preliminary 1% design elevations. For the 2010 runs, no gate is present at Seabrook.

For most Joint Probability Methods, several thousand events are evaluated. With the JPM-OS method, optimal sampling allows for a smaller number of events to be used. Based on optimized sampling, 152 hurricane events were modeled for the 2007 condition, and 56 hurricane events have been modeled for the 2010 condition. For the 2010 condition, the output from the 56 storms have been used with 96 storms from the 2007 condition to create a dataset of 152 storms required for the frequency analysis. A relationship has been determined from the two sets of conditions and applied to achieve a consistent dataset.

The 2007 results from ADCIRC and STWAVE have been used for Lake Pontchartrain Lakefront area and the West Bank. This area is not affected by the gates at GIWW/MRGO. The 2010 model results have been used for the analysis of the GIWW/MRGO gate were applied to the levee/floodwall sections starting from South Point to GIWW, the GIWW sections outside the gate and the St Bernard levee sections. In addition to that, the levee/floodwall sections of the GIWW and IHNC inside the gate with no Seabrook Gate have utilized the ADCIRC results.

1.2.3 Frequency Analysis

The output from the ADCIRC and STWAVE models used in the frequency analysis are the maximum surge elevation and maximum wave characteristics (significant wave height, peak period, and wave direction) at approximately 600 feet in front of the levee or floodwall. Typical parameters which are to be computed based on the surge level and the wave characteristics are the wave run-up and the overtopping rate. These parameters depend also on the levee geometry (i.e. levee height and levee slope). The determination of the wave overtopping will be discussed in Section 1.2.4.

An example of the model output at two locations within the hurricane protection system is shown in Figure 1.3. The wave characteristics along Lake Pontchartrain

are typically wind-generated and depth-limited waves. There is a high correlation between the wave height and the wave period and between the surge level and wave height for this area. In contrast, the results at the MRGO are much more scattered. The relationship between the surge level and the wave height is less evident, and the wave period strongly varies as a function of the wave height. Long wave periods are observed for a few storm conditions. The long wave periods are related to swell waves from the ocean.

A probabilistic model is used to derive the surge elevation, wave height, and wave period frequency curves at specific points along the hurricane protection system using output from ADCIRC and STWAVE. This probabilistic model takes into account the joint probability of forward speed, size, central pressure, angle of approach and geographic distribution of the hurricanes. For more information, the reader is referred to Resio (2007).

Surge frequency curves are estimated from the ADCIRC output of the 152 storms for 2007 and 2010 conditions. There may be instances where there is no output from the 152 storms. In this case, estimates are to be made of the surge elevation for the missing output so that the frequency analysis continued to be based on 152 values. The resulting 1% surge levels are considered to be “best estimate” values. In addition to the best estimates, the probabilistic model also provides an error estimate of the 1% surge levels. Errors are generally in the order of 1 – 2 ft for the 1% surge levels.

The same methodology is also used to develop frequency curves for wave height and wave period. Examples of frequency curves can be found in Figure 1.4. The errors in the 1% wave height and wave period have been based on expert judgment (Smith, pers. comm.). The standard deviations of the 1% wave height and wave period are assumed to be 10% and 20% of the best estimate value, respectively.

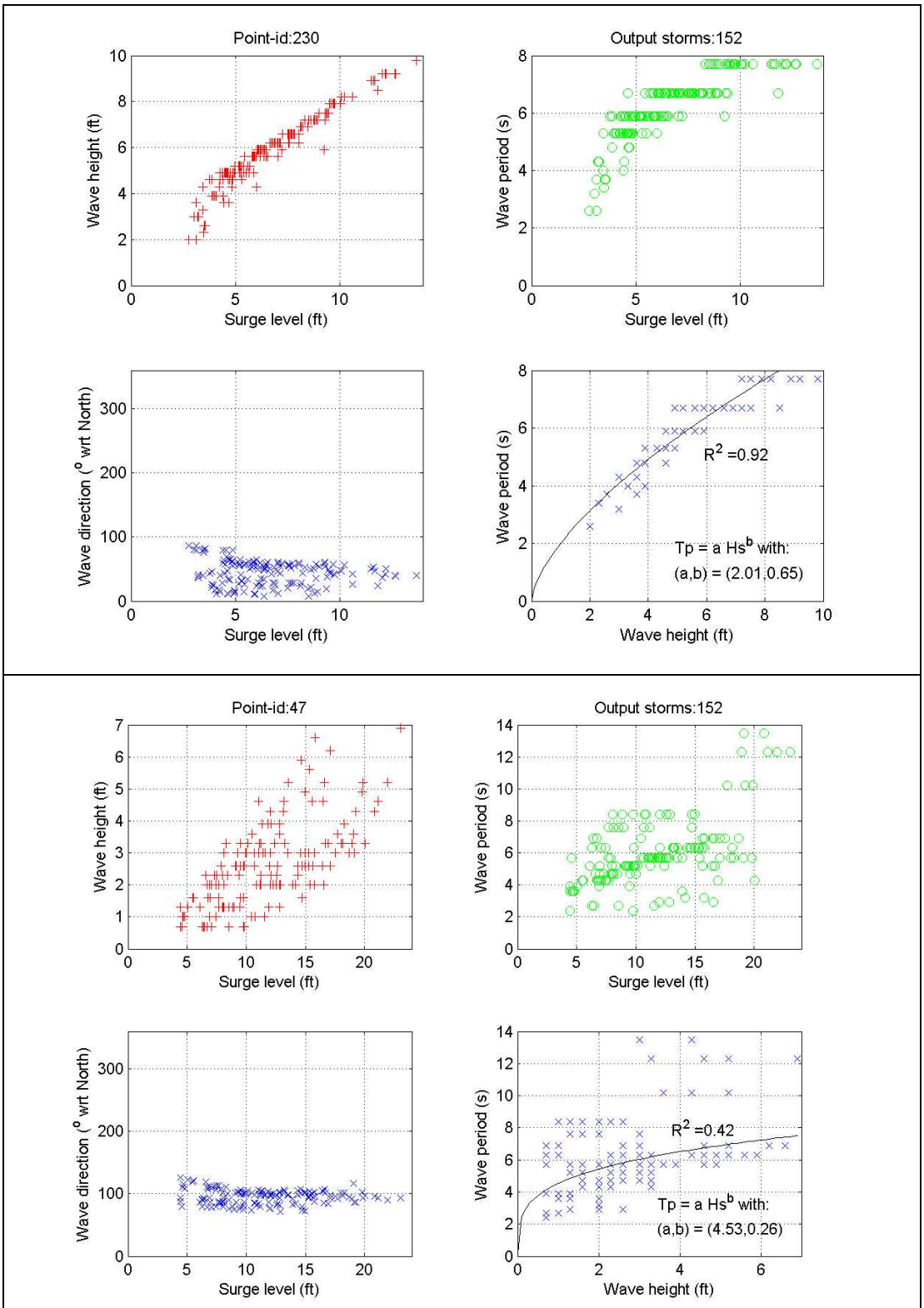

Figure 1.3 – Numerical results at Lake Pontchartrain (upper panel) and MRGO (lower panel) from ADCIRC and STWAVE.

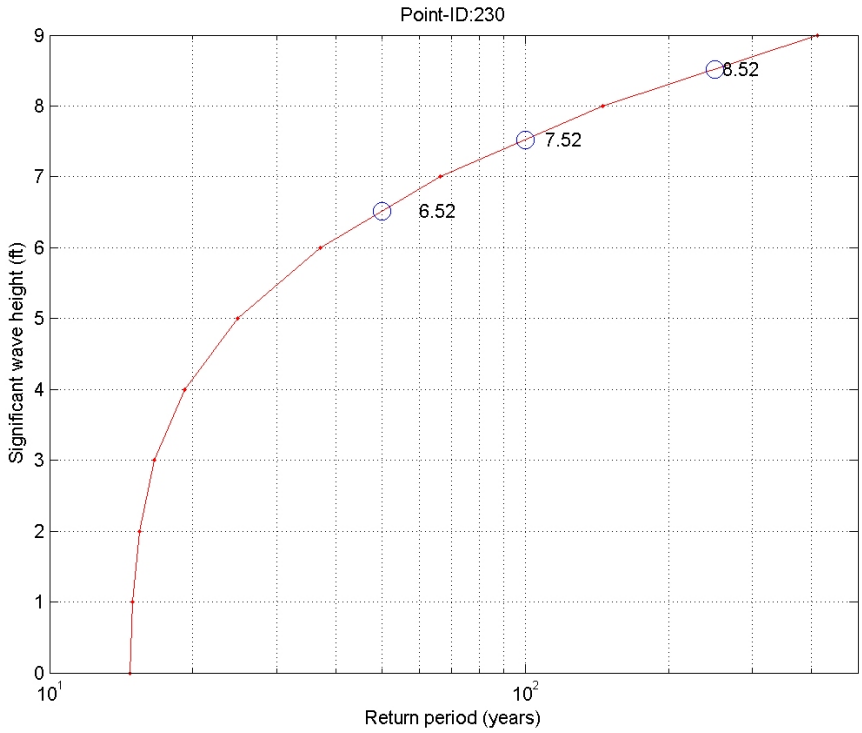



Figure 1.4 – Frequency curves of the wave height and wave period at Lake Pontchartrain (point 230) based on the STWAVE results and the JPM-OS method.

From the JPM-OS frequency analysis, 1% surge elevations, 1% wave heights, and 1% wave characteristics for existing conditions are applied in the wave run-up and overtopping calculations. These values do not consider any future changes due to factors such as subsidence and sea level rise. An additional analysis is performed representing conditions that may occur 50 years in the future and is discussed in Section 0. This future condition (year 2057) does consider changes in the surge levels and wave characteristics due to subsidence and sea level rise.

1.2.4 Wave Overtopping

Several methods are presently available for computing the wave overtopping rates. These methods can be divided into empirical methods (e.g. Van der Meer and Jansen, 1995 and Franco, 1999) and process-based methods (e.g. Lynett, 2002, 2004). Both methods are described briefly below:

Empirical methods: Several empirical relationships are derived between the offshore hydraulic conditions (wave height, period and water level) and the levee geometry (levee height, slope) and the wave run-up and overtopping rate. These formulations are generally fitted against extensive sets of laboratory data. For levees, there are well-known relationships are formulated by Van der Meer and Jansen (1995) for wave run-up and overtopping. These relationships include the effect of berms, roughness, and wave incidence. These formulations have been incorporated in a software program (PC-Overslag) which is available on the internet at no cost (TAW, 2007)[1]. A second set of formulas developed by Franco&Franco (1999) were used to compute wave overtopping at a vertical wall. The equations were placed in an Excel spreadsheet.

Process-based methods: In a process-based approach the run-up and overtopping rates are computed using the fundamental balance equations for mass and momentum of fluid motion. A Boussinesq model is presently the most appropriate model to compute these parameters within a reasonable time frame. The Boussinesq COULWAVE model from Texas AM was used for this report (e.g. Lynett, 2002, 2004).

Both methods have their advantages and disadvantages. The empirical methods are based on fitted curves through laboratory data, and their use is fairly straightforward. However, the disadvantage of the empirical methods is that these formulations cannot cope with very complex geometries. The basis of Boussinesq models is the governing equations of mass and momentum, and these models are able to handle more complex geometries. A drawback of these models is that they are still in an early stage of development, and the application is time-consuming. In addition, the Boussinesq model does not compute run-up and overtopping at vertical walls. As a design tool, the Boussinesq model lacks the capability to

[1] The reader is referred to the website: http://www.waterkeren.nl/download/pcoverslag.htm

execute in a production mode. Compound levee cross-sections cannot be modified iteratively in a straightforward and timely process.

It is concluded that both approaches give results within a factor of 2 - 3 if overtopping rates of 0.01 – 0.1 cfs/ft are considered. In terms of levee/flood wall heights, the differences in design elevations will be small (< 1ft).

1.2.5 Wave Forces

For floodwalls, pump station fronting protection, tie-in walls, and other vertical "hard" structures, the Goda formulation for computing wave forces is used (see e.g. USACE, 2001; part VI). A definition sketch is shown in Figure 1.5. Hydraulic inputs for these computations are the incoming wave height, wave period and the surge level. Moreover, the geometrical parameters of the structure (bottom elevation, top of wall, etc.) are inputs for this computation.

For submerged structures such as submerged breakwaters, ERDC has developed equations from measurements on a vertical wall in a straight flume physical model. There is the possibility of reflected waves in a confined basin, since his flumes tests did not consider wave amplification due to waves reflected from other vertical surfaces. Although refection would be possible under some conditions, the possibility of wave reflection was unlikely during a hurricane event when the seas were extremely disturbed. The reflected waves would need to be considered if forces during normal conditions are required.

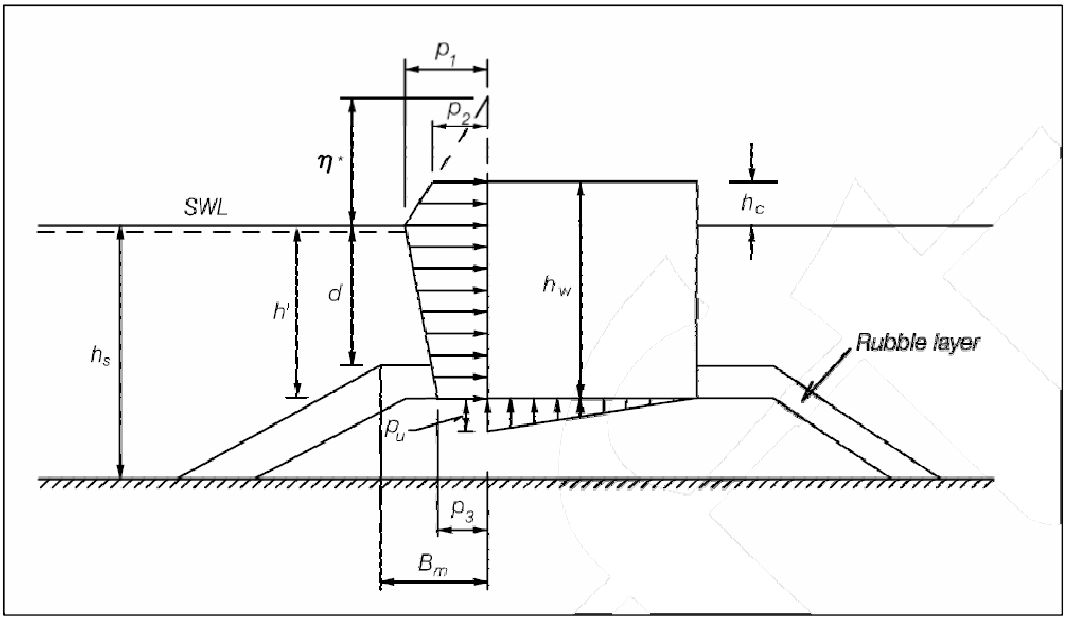

Figure 1.5 – Definition sketch of wave force calculations (source: Coastal Engineering Manual, 2001)

1.3 Step-wise Design Approach

The approach below gives a step-wise approach for determining design elevations and minimum cross sections of levees and design elevations for floodwalls. The step-wise approach is intended to be used for each section that is more or less uniform in terms of hydraulic boundary conditions (water levels, and wave characteristics) and geometry (levee, floodwall, structure). The hurricane protection reaches should be divided into segments with similar hydraulic boundary conditions, based on the JPM-OS frequency results for the water levels and wave characteristics.

Before giving an overview of the step-wise approach, several choices and assumptions in the design approach are discussed in detail. These items are:

- Use of 1% values for surge levels and waves
- Simultaneous occurrence of maxima
- Breaker parameter
- Overtopping criteria
- Dealing with uncertainties

1.3.1 Use of 1% Values for Surge Elevations and Waves

The step-wise design approach below is probabilistic in the sense that it makes use of the derived 1% water elevations and 1% wave characteristics based on the JPM-OS method (see Resio et al., 2006). The procedure also includes an uncertainty analysis that accounts for uncertainties in the hydraulic parameters and the overtopping coefficients. However, the approach is not fully probabilistic because the correlation between the water elevation and the wave characteristics is not taken into account. This assumption is an important restriction of this approach. Because of this assumption the presented approach is conservative. The impact of this assumption may vary from location to location.

1.3.2 Simultaneous Occurrence of Maxima

Another assumption in the design approach is that the maximum water elevation and the maximum wave height occur simultaneously. Figure 1.6 shows time series of surge elevation and wave characteristics at two locations: Lake Pontchartrain and Lake Borgne. The plots show that the time lag between the peak of the surge elevation and the wave characteristics at both sites is small (< 1 hour). It should be noted that there are cases in which the time lag between surge and waves is a bit larger (say 1 – 2 hours). Although this assumption might be conservative for some locations, we feel that assuming a coincidence of maximum surge and maximum waves is reasonable for most of the levee and floodwall sections in our design approach.

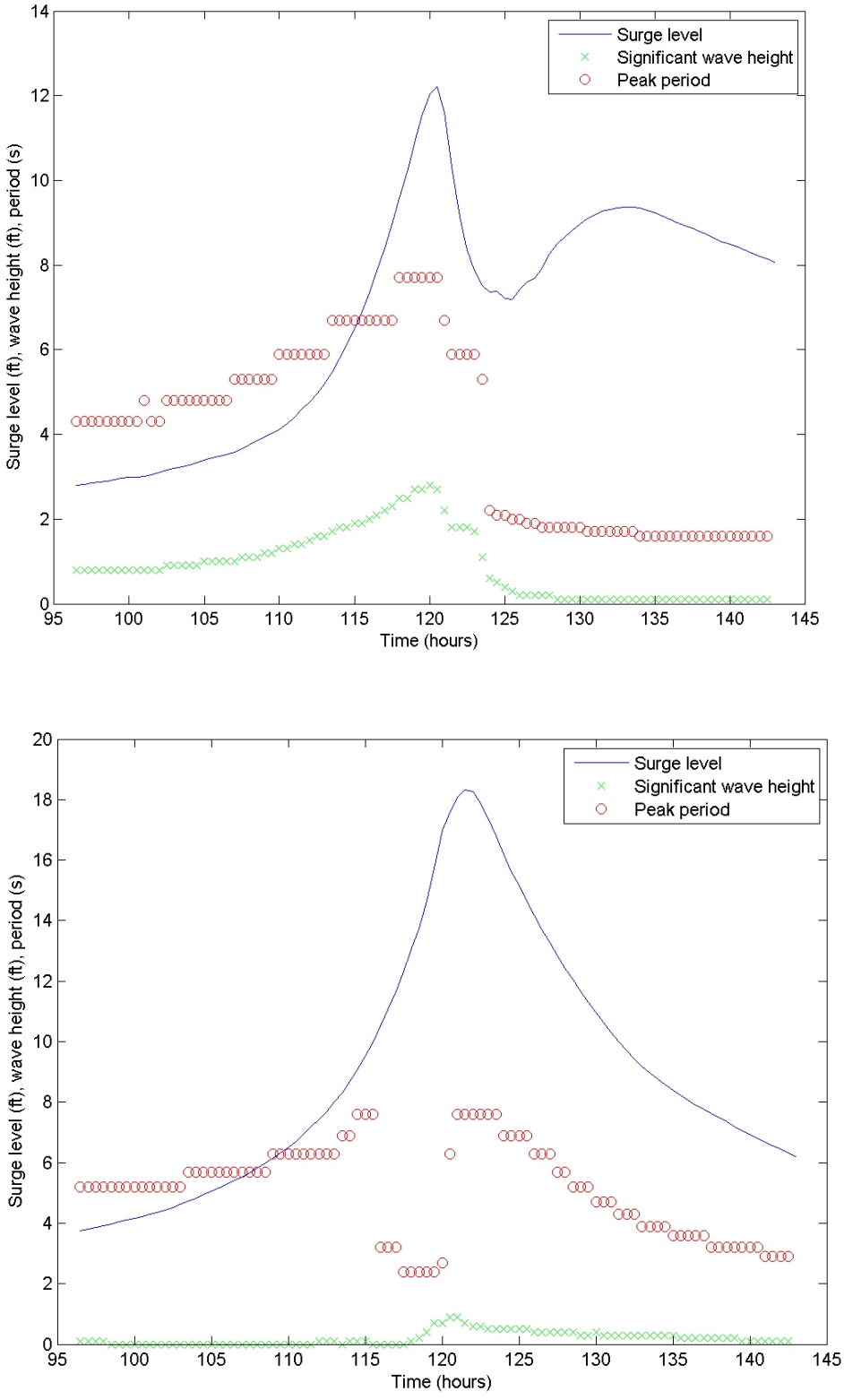

Figure 1.6 – Time histories of surge elevation and wave characteristics during storm 27 at Lake Pontchartrain (upper panel) and at Lake Borgne (lower panel).

1.3.3 Breaker Parameter

In the design approach, overtopping rates are computed using empirical formulations. One input is the wave height at the toe of the structure. This value must be estimated from the wave results from the STWAVE modeling at 600ft before the protection levee or structure. Because the foreshore is generally very shallow (same order as the wave height), wave breaking plays an important role in that 600ft. Hence, it is not likely that the wave height at 600ft in front of the levee or structure will be equal to the wave height at the toe of the levee or structure, but will be lower.

To account for breaking in front of the levee or structure, the wave height from STWAVE is reduced using a breaker parameter. The breaker parameter is the ratio between the significant wave height and the local water depth. In the literature, the breaker parameter is often a constant or it is expressed as a function of bottom slope or incident wave. A typical range for this parameter is between 0.5 – 0.78 in engineering purposes. These values are generally obtained for situations with a mild sloping bed.

Laboratory experiments (Resio, pers. comm.) and Boussinesq runs (Lynett, pers. comm.) suggest that the breaker parameter of 0.4 is a realistic choice for a relatively long shallow foreshore as it is the case for the levees and structures within the project area. Based on recommendations from ERDC, this value has been used in the entire design approach to translate the significant wave heights based on STWAVE model results in the significant wave height at the toe of the levee or structure. The peak period from STWAVE has been used without modification.

1.3.4 Overtopping Criteria

A literature survey has been carried out to underpin the value for the overtopping criterion for levees that must be used in this design approach. The survey shows that various numbers have been proposed. Experimental validation of these numbers is very limited. Typical values according to the Dutch guidelines are (see also TAW, 2002):

- 0.001 cfs/linear ft (cfs/ft) for sandy soil with a poor grass cover;
- 0.01 cfs/ft for clayey soil with a reasonably good grass cover;
- 0.1 cfs/ft for a clay covering and a grass cover according to the requirements for the outer slope or for an armored inner slope.

The literature review suggests that a 0.1 cfs/ft is an appropriate range for maximum allowable overtopping rates based on Dutch and Japanese research.

However, it is difficult to assess the adequacy of applying criteria for the New Orleans area without a good understanding of the overall quality of the levees following many different periods of construction and the effects of stresses of past

hurricanes. The actual field evidence supporting these criteria is limited. After consultation with the ASCE External Review Panel, the following wave overtopping rates have been established for the New Orleans District hurricane protection system:

- For the 1% exceedence still water, wave height and wave period, the maximum allowable average wave overtopping of 0.1 cfs/ft at 90% level of assurance and 0.01 cfs/ft at 50% level of assurance for grass-covered levees;
- For the 1% exceedence still water, wave height and wave period, the maximum allowable average wave overtopping of 0.1 cfs/ft at 90% level of assurance and 0.03 cfs/ft at 50% level of assurance for floodwalls with appropriate protection on the back side.

1.3.5 Dealing with Uncertainties

The hydraulic and geometrical parameters in the design approach are uncertain. Hence, the uncertainty in these parameters should be taken into account in the design process to come up with a robust design. This section proposes a method that accounts for uncertainties in water elevations and waves, and computes the overtopping rate with state-of-the-art formulations. The objective of this method is to include the uncertainties check if the overtopping criteria are still met with a certain percentage of assurance.

The parameters that are included in the uncertainty analysis are the 1% water elevation, wave height and wave period. Uncertainties in the geometric parameters are not included; it is assumed that the proposed heights and slopes in this design document are minimum values that will be constructed. To determine the overtopping rate, the probabilistic overtopping formulations from Van der Meer are applied (see textbox below) but also the Boussinesq results could be incorporated in the method. Besides the geometric parameters (levee height and slope), hydraulic input parameters for determination of the overtopping rate in Eq. 1 and 2 are the water elevation (ζ), the significant wave height (H_s) and the peak period (T_p).

In the design process, we use the best estimate 1% values for these parameters from the JPM-OS method (Resio, 2007); uncertainty in these values exists. Resio (2007) has provided a method to derive the standard deviation in the 1% surge elevation. Standard deviation values of 10% of the average significant wave height and 20% of the peak period were used (Smith, pers. comm.). In absence of data, all uncertainties are assumed to normally distributed.

Van der Meer overtopping formulations

The overtopping formulation from Van der Meer reads (see TAW 2002):

$$\frac{q}{\sqrt{gH_{m0}^3}} = \frac{0.067}{\sqrt{\tan\alpha}}\gamma_b\xi_0 \exp\left(-4.75\frac{R_c}{H_{m0}}\frac{1}{\xi_0\gamma_b\gamma_f\gamma_\beta\gamma_v}\right)$$

$$with \quad \max imum: \quad \frac{q}{\sqrt{gH_{m0}^3}} = 0.2\exp\left(-2.6\frac{R_c}{H_{m0}}\frac{1}{\gamma_f\gamma_\beta}\right) \qquad (1)$$

With:
q : overtopping rate [cfs/ft]
g : gravitational acceleration [ft/s^2]
H_{m0} : wave height at toe of the structure [ft]
ξ_0: surf similarity parameter [-]
α : slope [-]
R_c : freeboard [ft]
γ : coefficient for presence of berm (b), friction (f), wave incidence (β), vertical wall (v)

The coefficients -4.75 and -2.6 in Eq. 1 are the mean values. The standard deviations of these coefficients are equal to 0.5 and 0.35, respectively and these errors are normally distributed (see TAW document).

Eq. 1 is valid for $\xi_0 < 5$ and slopes steeper than 1:8. For values of $\xi_0 > 7$ the following equation is proposed for the overtopping rate:

$$\frac{q}{\sqrt{gH_{m0}^3}} = 10^{-0.92}\exp\left(-\frac{R_c}{\gamma_f\gamma_\beta H_{m0}(0.33+0.022\xi_0)}\right) \qquad (2)$$

The overtopping rates for the range $5 < \xi_0 < 7$ are obtained by linear interpolation of eq. 1 and 2 using the logarithmic value of the overtopping rates. For slopes between 1:8 and 1:15, the solution should be found by iteration. If the slope is less than 1:15, it should be considered as a berm or a foreshore depending on the length of the section compared to the deep water wave length. The coefficients -0.92 is the mean value. The standard deviation of this coefficient is equal to 0.24 and the error is normally distributed (see TAW 2002).

The Monte Carlo Analysis is executed as follows:

1. Draw a random number between 0 and 1 to set the exceedence probability p.
2. Compute the water elevation from a normal distribution using the mean 1% surge elevation and standard deviation as parameters and with an exceedence probability p.
3. Draw a random number between 0 and 1 to set the exceedence probability p.
4. Compute the wave height and wave period from a normal distribution using the mean 1% wave height/wave period and the associated standard deviation and with an exceedence probability p.
5. Repeat step 3 and 4 for the three overtopping coefficients independently.
6. Compute the overtopping rate for these hydraulic parameters and overtopping coefficients determined in step 2, 4 and 5
7. Repeat the step 1 – 5 a large number of times (N)
8. Compute the 50% and 90% confidence limit of the overtopping rate (i.e. q_{50} and q_{90})

The procedure is implemented in the numerical software package MATLAB.

The Jefferson Lakefront levee section along Lake Pontchartrain has been taken as a reference herein to show one result of this uncertainty analysis. Table 1.1 shows the typical input needed for the Monte Carlo Analysis. It shows the input parameters for the coefficients of the overtopping formulation, the 1% hydraulic design characteristics, and the levee characteristics. Furthermore, the levee characteristics are listed such as the design height and the slope. Several test runs show that N should be +/- 10,000 to reach statistically stationary results for the 50% and 90% confidence limit value of the overtopping rate (Figure 1.7).

Figure 1.8 shows the result of the Monte Carlo analysis; overtopping rate is shown as a function of the exceedence probability. The red lines indicate the 50% and 90% confidence limit value of the overtopping rate for levees. The 50% and 90%-value of the actual overtopping rate for this specific levee section are also depicted in the plot. The result shows that the 90%-value for overtopping is below 0.1 cfs/ft and the 50%-value is below 0.01 cfs/ft, and this section meets the design criteria.

The computation of the overtopping rate in the present MATLAB routine is limited in the sense that it can only take into account an average slope for the entire cross-section. If a wave berm exists, this effect is included in a berm factor. The berm factor is adjusted in a realistic range so that the mean overtopping rate is estimated correctly compared with the result from PC-Overslag.

Table 1.1 -- Input for Monte Carlo Analysis.

Parameter	Mean	Standard Deviation	Unit	Remarks
Coefficient overtopping formula in Eq. 1	-4.75	0.5	-	Mean and standard deviation follow from TAW manual (TAW, 2002)
Coefficient overtopping formula in Eq. 1	-2.6	0.35	-	See above
Coefficient overtopping formula in Eq. 2	-0.92	0.24	-	See above
1% water elevation	9.0	0.6	ft	Values follow from JPM-OS analysis (see Resio, 2007)
1% wave height	3.6	0.4	ft	Mean value from JPM-OS analysis, standard deviation 10% of mean value based on expert judgment
1% wave period	7.7	1.54	s	Mean value from JPM-OS analysis, standard deviation 20% of mean value based on expert judgment
Levee height	16.5	-	ft	
Slope	1V:4H	-	-	
Berm factor	0.6	-	-	
Number of runs	10,000	-	-	

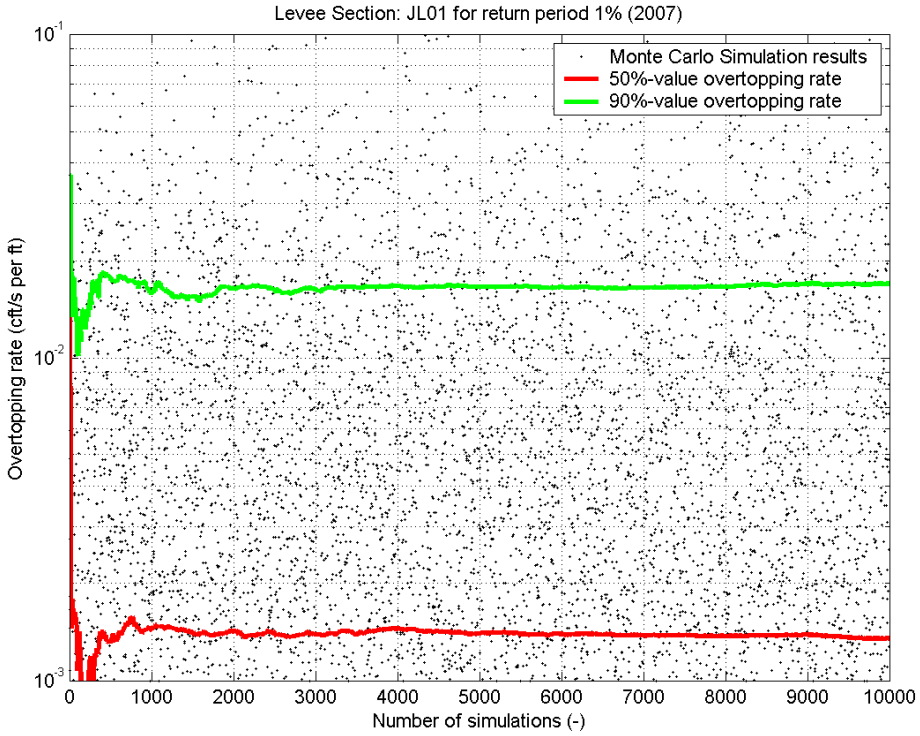

Figure 1.7 – The 50% and 90% confidence limit value of the overtopping rate as a function of the number of simulations during the Monte Carlo Analysis. The dots represent the actual results from the Monte Carlo Simulation, whereas the red and green lines represent the moving value over the number of simulations.

Notice that the uncertainty analysis described above is also implemented to compute the wave forces with different confidence levels. It makes use of exactly the same procedure, but computes the wave forces based on the Goda formulation. A Monte Carlo Simulation is performed with the water level, wave height and wave period, and the associated uncertainty, to compute the 50% and 90% assurance wave forces. Dependency between the errors in the wave height and wave period is maintained, whereas the error in the surge level and the wave characteristics are to be treated independently.

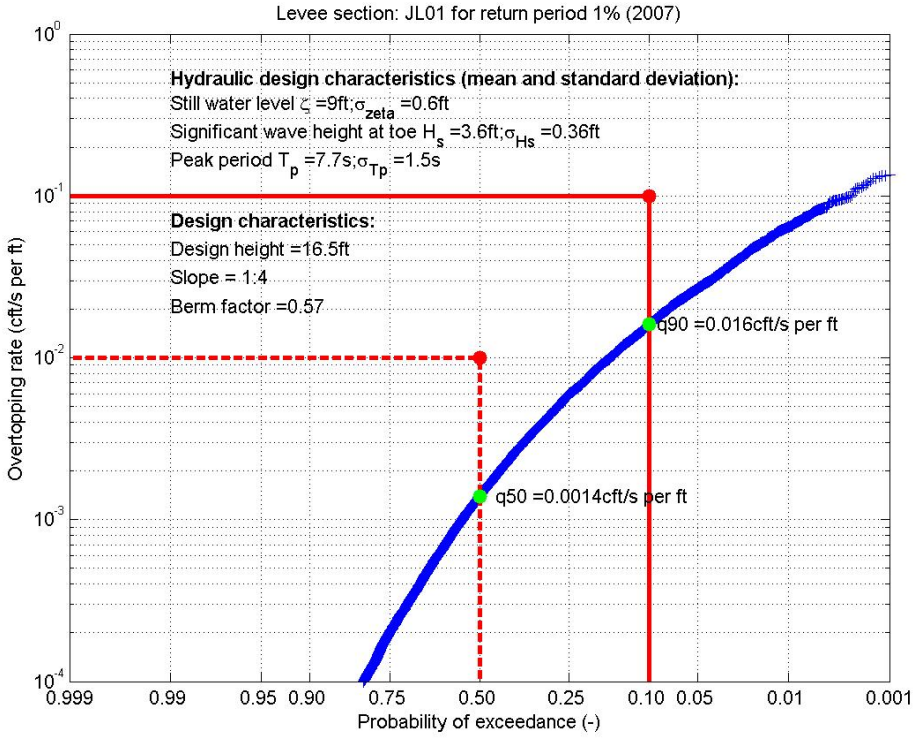

Figure 1.8 – Result of Monte Carlo Analysis for Jefferson Lakefront levee (existing conditions).

1.3.6 Step-Wise Approach

The proposed step-wise approach for design is as follows:

Step 1: Water elevation

1.1 Examine the 1% surge elevation from the surge frequency plots at all output points along the reach under consideration. The 1% surge elevations are the results based on the 152 storm combinations and using the probabilistic tool (JPM-OS method).

1.2 Determine the maximum 1% surge elevation for a design reach and use this number for the entire reach. The maximum is chosen to meet the design criterion at the most critical point in the section.

Step 2: Wave characteristics

2.1 Examine the 1% significant wave height and peak period from the frequency plots at all output points along the reach. The 1% wave heights and peak periods are the results based on the 152 storm combinations and using the probabilistic tool based on the JPM-OS method.

2.2 Determine the maximum 1% significant wave height and peak period for the reach and use these numbers for the entire reach. The maximum wave height

and wave period are chosen to meet the design criterion at the most critical point in the section under consideration.

2.3 Determine if the foreshore in front of the structure is shallow. The foreshore is shallow if the ratio between the significant wave height (H_s) and the water depth (h) is small ($H_s/h > 1/3$) and if the foreshore length (L) is longer than one deep water wave length L0 (thus: $L > L_o$ with $L_o = gT_p^2/(2\pi)$). If so, the wave height at the toe of the structure should be reduced according to $H_{smax} = 0.4$ h. This reduction should only be applied if an empirical method is applied for determining the overtopping rate (e.g. PC-Overslag). The breaking effect is automatically included in the Boussinesq runs.

Step 3: Overtopping rate

3.1 Apply PC-Overslag with Van der Meer formulations (see also CEM) to determine the overtopping rates. If a wall is present, the empirical formulation of Franco&Franco (1999) will be applied. For specific complicated cross-sections, the Boussinesq lookup tables may be applied as well to compute the overtopping rate.

3.2 Determine the overtopping rate based on the 1% (average) values for the surge elevation, the significant wave height and the peak period. Use the reduced wave height in case of a shallow foreshore in the empirical approach only (e.g. PC-Overslag).

Step 4: Dealing with uncertainties

4.1 Apply a Monte Carlo Simulation to compute the chance of exceedence of the overtopping rate given the design elevation and slope from step 3. This method takes into account the uncertainties in the 1% water elevation, the 1% wave height and the 1% wave period. The approach is explained in detail in the next section.

4.2 Check if the overtopping rate will not exceed the design thresholds for overtopping. If yes, the design process is finished from a hydraulic point of view. If not adapt the levee or floodwall height or slope in such a way that this criterion is reached.

Step 5: Resiliency

For the design analysis, the overtopping rate for the 0.2% exceedence event is evaluated and both the 50% and 90% confidence limits of the overtopping rates are computed given the 1% designs. This information will be used in the entire design process to evaluate the resilience and check if armoring or other measures are necessary. This approach is still under review, and no final decisions have been made as to the use of the 0.2% event information.

1.4 Design Conditions

Two design conditions are considered in this report: existing conditions and future conditions. Both conditions are discussed below.

1.4.1 Existing Conditions

Design elevations for this scenario are considered to reflect conditions that are likely to exist in the year 2007 or year 2010. It is assumed that all levee and floodwall repairs have been made, and the interim or permanent closures and pumping stations at 17th St., Orleans Avenue and London Avenue outfall Canals are in place. The gates on the MRGO/GIWW are in place.

For most of the analysis, the existing surge elevations are based on the ADCIRC results of the 152 storm conditions for the 2007 case in conjunction with the JPM-OS method. The existing wave conditions are derived based on the STWAVE results, and are derived in a similar way. Model results from the 2010 condition were used for the analysis of the area that is affected by the MRGO/GIWW gate.

1.4.2 Future Conditions

Design elevations for this scenario are considered to reflect conditions that are likely to exist in the year 2057. Changes in surge elevations will occur in the future due to subsidence and sea level rise. Historical subsidence, projections of sea level rise, and previous studies were used to estimate future changes in surge elevations. Natural subsidence rates, including sea level rise, have been mapped by MVN for the LCA effort. Figure 1.9 shows the combined natural subsidence/eustatic sea level rise for the hurricane protection project area. The values presented in Figure 1.9 are geologic rates and do not consider any factors such as pumped drainage, which can influence regional subsidence. A relative sea level rise of 1ft over 50 years was used in the design analysis to represent future conditions in the entire area.

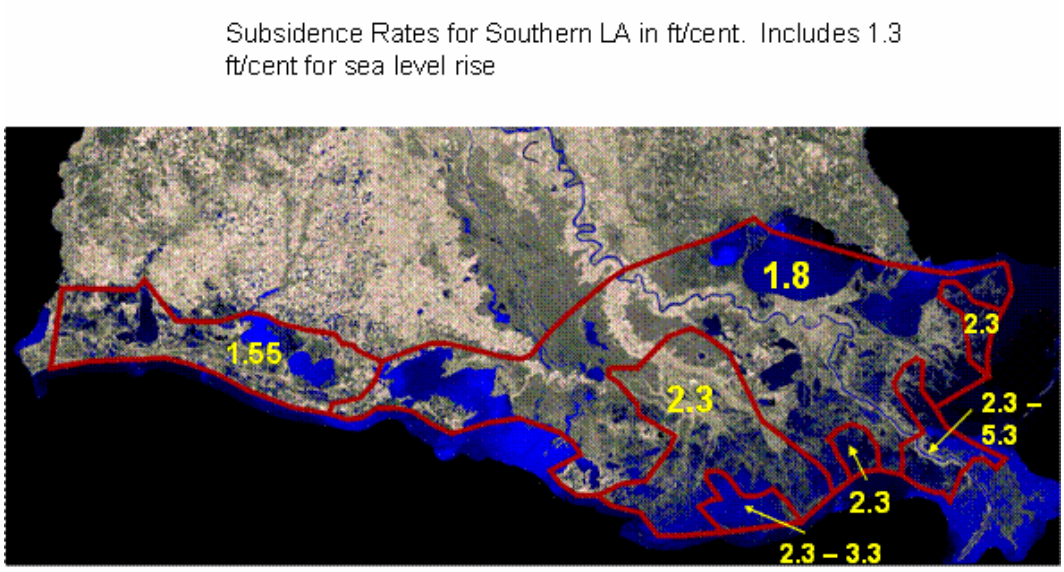

Figure 1.9 Estimated relative sea level rise during 100 year (subsidence + sea level rise)

Several ADCIRC and STWAVE model runs were performed to investigate the effect of the increasing sea level rise on surge levels and wave characteristics. These results show that:

- The surge levels increase more than proportional to increasing sea level rise (factor 1.5 to 2). A factor 1.5 implies that 1 ft sea level rise results in 1.5 ft increase of the surge level etc.
- The wave heights increase due to sea level rise. The relative effect on the wave heights is about 0.3 to 0.6 which means that 1 ft surge level results in 0.3 to 0.6 ft increment of wave height.
- The effects are not uniform in the entire area but depend on the local water depth, and geometry of the area of interest.

Based on these, the future conditions are summarized below (Table 1.2):

Table 1.2 - Future conditions for surge level and wave characteristics

Future conditions	Surge level h_{surge}		Significant wave height H_s		Peak period T_p
	$\Delta h_{surge}/\Delta h_{sealevel}$ (-)	Δh_{surge} (ft)	$\Delta H/\Delta h_{surge}$ (-)	ΔH (ft)	ΔT_p (s)
Lake Pontchartrain, New Orleans East, IHNC and GIWW, St Bernard	1.5	+1.5ft	0.5	+0.75ft	Increase by assuming unchanged wave steepness (H/T^2)
Caernarvon, West Bank	2.0	+2ft	0.5	+1ft	Increase by unchanged wave steepness (H/T^2)

Because the future condition surge elevations are derived from the surge elevations for existing conditions, uncertainty in the data and methodologies has been included. No additional value was added to address uncertainty in the increment representing subsidence, land loss, and sea level rise. The future condition surge elevation was used in wave computations, wave loads on walls and other “hard” structures, and to determine design elevations.

1.5 Design Elevations and Loads

In the design analysis, two types of flood protection are considered: soft structures (levees) and hard structures (floodwalls and other structures like pumping stations).

Levees. The design elevations are computed for both the present and the future conditions. The design elevations presented in this report only consider (relative) sea level rise for future conditions, but do not consider settlement or other structural adjustments. The design elevation recommended for levee construction at this time is the existing elevation. The levees are expected to be adapted several times during its lifetime due to settlement and changes in the hydraulic conditions should be taken into account as well.

Floodwalls and Other Structures. The recommended design elevation for floodwalls and other "hard" structures is the future conditions elevation. The recommended design elevation for floodwalls and other "hard" structures should be no less than the future condition design elevation of adjacent levees. Floodwalls and other "hard" structures will require extensive reconstruction in the future; incorporating future changes into the design of these structures now is a prudent design consideration.

The design elevations of floodwalls sometimes do include structural superiority. Structural superiority is incorporated in the design elevation for those structures that would be very difficult to rebuild, if damaged, because of disruption in services. Examples are major highway and railroad gates that require detours, pumping station fronting protection that requires reductions to pumping capacity, sector gated structures, etc. These structures are to be constructed to the 2057 levels plus 2 ft. for structural superiority. Floodwalls that can be rebuilt in areas with little or no disruption of services are to be constructed to the 2057 level.

The wave forces have been computed for the floodwalls and submerged breakwaters. These forces are evaluated for future conditions (2057). Wave forces are evaluated for two confidence levels (50% and 90%) to present the uncertainty in these numbers. At this moment, there has not been made a final decision at MVN which of these results will be used in the structural design.

1.6 Armoring

1.6.1 Introduction

Damage sustained to the levee system during Hurricane Katrina occurred primarily: (1) at transitions between earthen levees and vertical floodwall structures, (2) on the protected-side slopes of earthen levees, and (3) near the protected side base of vertical floodwalls. In May 2006, US Army Engineer Research and Development Center (ERDC), Vicksburg, MS completed an

evaluation of armoring for the US Army Engineer District, New Orleans (MVN) and for Task Force Guardian (TFG). The purpose of this evaluation was to overview levee and floodwall failure modes, characterize the hydrodynamic forces that protection systems must withstand, establish initial performance criteria for protection systems, and provide an initial assessment of available armoring and protection systems.

There are four major topics relating to armoring for which guidance is required – protected side fortification of levees to minimize the effects of overtopping, frontside protection of levees from wave attack, protected side protection of walls and levee/wall transition areas, and the use of engineering solutions such as breakwaters and soil modification to modify or reduce overtopping effects.

Scour protection details and guidance used for TFG have been included in the Structrural section of this document; it is included as reference only. Proper engineering must be accomplished to ensure the best solution. There are many factors that must be considered, such as scour materials, overtopping hydraulics, and the effects of water that has overtopped on interior drainage and infrastructure.

Different materials are available for armoring. They include: Riprap; Gabions or other wire baskets filled with stone; Rock-filled wire or geogrid mattresses; Articulated concrete mattresses of interlocking blocks or blocks connected by cables; Cast-in-place, concrete-filled geosynthetic mattresses or tubes; Soil stabilizing devices designed to retain the soil within the structure such as geocells; Mattresses designed to hold vegetation in place such as “Turf Reinforcement Mats” (TRMs); and paving with asphalt or concrete. Soil reinforcement and the use of best construction materials and techniques may improve the levee’s ability to withstand erosion.

1.6.2 Levee Armoring

Two essential items are needed in order to design armoring. First, it is essential to know the anticipated extreme loading for which armoring is required, and, second, it is essential to know the limits of applicability of various armoring protection systems and the upper limits of the extreme loading for which protection is desired. When both of these are known, the engineer will select the appropriate armoring that has a resistance equal or greater than the anticipated extreme loading.

The current design philosophy entails limiting the overtopping of protections that occur in the 1% event to a quantity that can be carried by typical turf covering. The more critical design condition is to provide armoring for overtopping of protections that occur in the 0.2% event. The hydraulic engineer will provide the design overtopping rates for this event. It is important to note that overflow of the

system, i.e., free flow at the still water level, is not allowed for the 1% or 0.2% events. Armoring will be designed to protect from wave and over splash only.

The use of existing guidelines for stone as an armoring material clearly demonstrates the problem of lack of testing and lack of guidance on hydraulic issues related to overtopping; one such problem is the thickness of the stone vs the depth of wave runup or overtopping. For stone to withstand the magnitude of the velocities experienced during Hurricane Katrina computed by IPET on the MRGO levee, the thickness calculated using traditional methods contained in EM 1110-2-1601 is considerably larger than the depth of water. Will the overtopping continue to flow on top of the rock or be absorbed within the rock thickness? How are the velocities altered?

Revetment is presently being tested at ERDC as a potential armoring material along the MRGO levee. Anchoring the revetment is a critical issue. ERDC tests show the possibility of the revetment at the toe of the floodside slope to roll up; at the toe of the backside slope, the revetment was lifted each time a wave of water reached it.

In addition to armoring protection for all forms of overtopping, armoring protection may be needed for wave attack. Overtopping protection is for the crest and the back, or protected, side of the levee, and wave protection is for the floodside of the levee. The floodside protection for wave attack is much better documented than is the protection for overtopping. Armor stone size and riprap gradations can be obtained from the interactive version of the Coastal Engineering Manual.

ERDC found that few (if any) armoring or slope protection products have been tested at large scale for effectiveness when subjected to wave overtopping. The periodic nature of wave overtopping makes a difference between wave overtopping and steady flow overtopping. As each wave overtops, it has a forward velocity across the levee crest that likely exceeds the crest velocity of surge overtopping. Thus, unprotected soil on the levee crest that is stable for surge overtopping may erode if waves overtop. However, this flow condition is unsteady and peak velocities are sustained for only a brief time. In addition, the unsteady discharge over the crest results in a limited overtopping volume. Consequently, any erosion on the backside slope due to wave overtopping is intermittent, and probably does not progress at rates as high as what can occur for steady surge overtopping.

Without a doubt, turf is the most economical revetment material in terms of installation and maintenance. However, there are situations where turf is not strong enough to resist the erosive forces due to design conditions. The more preferable alternative is to use turf reinforcement since it has distinct advantages in terms of cost, weight, ease of installation and maintenance over other systems of armoring. When the potential erosion forces are deemed to be greater than the

resistance capacity of reinforced turf, other systems such as rip-rap, articulated mats, interlocking blocks, gabions, concrete paving, etc. will be required.

However, before designing armoring for wave attack it is important to recognize how well the turf on the New Orleans Lakefront levees (LPV project) withstood wave attack. Waves of 2.5 to 3 meters were measured on the south shore of the lake in the vicinity of the new Coast Guard station just west of the 17th Street Canal. To the east, the levee is protected by the Orleans seawall but to the west in Jefferson Parish there is little protection for the levee. Along the entire Lakefront levee, there was no reported wave erosion.

The Dutch have published a technical report on the erosion resistance of grass as levee (dike) covering (TAW, 1997). In the Netherlands, waves against the outer banks of sea and lake dikes can reach heights of more than 1.5 meters. The Dutch found that very good grass mats, on a bank of slope 1:3 to 1:4 and on erosion-resistant undersoil, can withstand waves up to 1.0 meters with no serious damage after more than one day. The damage free period for waves of slightly more than 1.0 meters was shorter, but still long enough to cope with the Dutch storm flood. The underlayer was found to be important; it should always consist of adequate erosion-resistant clay, which must be at least 1 to 1.5 meters thick. Grass mats above the still water level were found to resist waves higher than grass mats in the wave breaking zone.

1.6.2.1 Turf Design

Both the Dutch and the Danes have done extensive testing of existing turf on dikes. The resistance to erosion increases with the density of root mass. The critical parameter is the dry root mass per unit area. They have also determined the best practices to increase the root mass of the turf. All of the mechanisms that are expounded by the Dutch and the Danes appear counter-intuitive at first but upon reflection make perfect sense. For example, non-fertilized turf has better erosion resistance than fertilized turf. This is because the amount of roots is the most important factor. Fertilization will produce lush greenery, but the greenery does not contribute to erosion resistance. It merely shears off in any high energy environment. Fertilization allows the roots to uptake lots of nutrients without having to extend the root mass in search of nutrients. For the same reason soils with low nutrient content produce better erosion resistant turf, since the roots have to grow and search for nutrients. A large variety of species will produce a better turf since there will be competition among the plants. The Danes categorize a turf in terms of the number of species per 25 square meters. A good dike turf will have over 20 species per 25 square meters.

Land use will influence the quality of the turf. Grazing of livestock (equivalent to our frequent mowing) does not produce the same root mass as haying. Allowing the grass to grow tall before cutting encourages deeper roots to support the taller grass. Of course the grass should be removed (as is done in making hay) for two

reasons, one so that the cut grass does not suffocate the grass plants and two so that the cut grass does not compost and produce nutrients in the upper layer and thus impeding root growth.

The geotechnical lab at ERDC produced a scope of work and a cost estimate to investigate the strength of the turf on the hurricane levees in the New Orleans District. The scope included parameterizing the depth and density of the roots for various levee turfs. When this investigation gets funded, it will help District engineers to understand the limits of turf protection. This investigation will also have help to answer questions MVN-ED-H engineers have about the testing of reinforced turf mats at the Colorado State steep gradient flume facility.

In the past very little attention has been given to the production of quality turf. It is essential that the Corps begin to look at turf as the important revetment material that it is and start to implement a program along with the local sponsors to produce the best quality turf and turf management practices.

1.6.2.2 Turf Reinforcement

Turf reinforcement has four distinct advantages over any other system of levee armoring. Foremost, the turf reinforcement does not contribute any significant weight that will induce settlement or stability issues. The cost is much less than rock, or any other heavy material. Turf reinforcement can be more quickly installed than any other system. Turf reinforcement is easily maintained, it just needs to be mowed the same as turf. Riprap and gabions will eventually have trees and shrubs growing in them and properly removing them is a serious negative consideration.

For the reasons listed above turf reinforcement mats (TRM) should be given serious consideration in the effort to armor the hurricane protection levees. The only question is to determine the limits of the applicability of TRM protection. Only vigorous research can provide this much needed answer.

1.6.3 Walls and Levee Transitions

Floodwalls that may be overtopped by rising water should be designed with erosion protection on the protected side capable of resisting the force of the free-falling water jet. Equations are available to compute the location where the free-falling water jets hits the ground on the backside of the wall. This location is dependent on the height of the wall and the surge height above the wall. ERDC found that these equations may under estimate the distance. The protection coverage must extend away from the wall beyond this location to account for the hydraulic jump that will form when the flow changes from supercritical to subcritical as well as uncertainty in the computation. Where overtopping is from waves only, the unsteady discharge will be a function of wave height, wave period, and surge elevation relative to the wall. Erosion of unprotected soil will

occur as the waves cascade over the wall, but the unsteadiness of the process, coupled with the variation of impact point due to irregular waves, makes scour estimation difficult, if not impossible.

For transition areas, as indicated in the ERDC report, simple analytical methods for estimating the increased flow velocities that occur at transitions are lacking, and most likely either physical modeling or sophisticated numerical simulations will be required to establish flow velocities due to surge overtopping in the vicinity of levee/floodwall transitions. However, some insight into the overtopping problem can be gleaned by looking at results obtained from two-dimensional inviscid jet theory. Based on discharge contours, the flow velocity along the outer edge of the jet is about 1.64 times the flow velocity through the middle of the gap. Therefore, it is easy to see that the region immediately adjacent to the vertical wall experiences the largest flow velocity. The addition of waves propagating on top of the overtopping surge compounds the complexity of the flow situation, and no simple procedures are available to address this case. Laboratory testing will be the best tool for examining the stability of armoring alternatives subjected to water and wave overtopping at levee transitions.

1.6.4 On-going Studies

ERDC Coastal and Hydraulics Laboratory has completed field study of the effects of the 2005 hurricanes on the hurricane and storm damage reduction system. Their findings are summarized in the report, “Protection Alternatives for Levees and Floodwalls in Southeast Louisiana: Phase One Evaluation.” Although the document is still a draft, Chapter 4, “Protection for Overtopped Floodwalls,” is included as an appendix to these guidelines for information only.

Phase Two of the study, which is to provide physical modeling and recommendations for design of overtopping and scour protection, has not been completed. That information will be incorporated into these guidelines as soon as it is available.

Task Force Hope has commissioned an Armoring Team to provide guidance on the use of existing technologies for armoring and to more rigorously investigate armoring design and methods for future use. Engineering Division Hydraulics Branch has also chartered a team to investigate ways to provide resiliency for levees and walls that are overtopped by events exceeding design conditions. This effort includes plans to perform a field test of a levee subjected to overtopping forces. Input from these two teams will guide future design work and design guidance.

2.0 RELOCATIONS

2.1 Facility Relocations

There are numerous facilities within the limits of work that will/may be affected by the proposed work and will/may require relocation. Relocation documents, which include ROW drawings with identified existing facilities, completed questionnaire forms, and as-built drawings, are required at 35% Review. These documents are for the relocating of all roads, railroads or utilities, or any feature impacted by the proposed work.

Existing facilities impacted shall be identified on plan and profile and rights-of-way drawings. Designers shall verify all relocation items within the ROW and identify any additional relocation items that lie within the ROW and are not shown on these drawings. Relocation plans shall include overhead and underground electrical lines, overhead and underground cable and telephone lines, underground pipelines, sewer lines, and any other utilities as well as any roads or rail lines that will be affected by the proposed work.

The Corps of Engineers drawing H-8-29027 “Pipeline Crossing Over Levees and Floodwalls” provides approved design guidelines for a variety of pipeline crossing situations. This drawing is included in Section 12.

In addition, if the Construction Contractor must cross any buried pipeline during construction, coordination with the owner shall be required to determine if pipeline protection is required. If an owner determines that protection is required, designers shall obtain a pipeline protection plan from the owner. Designers shall meet with the facility owners and provide them with the Government-furnished Utility Relocations Questionnaires to gather all information regarding the types of facilities crossing the proposed flood protection. Designers shall request any as-built drawings for and shall also discuss the proposed relocations of the facilities crossing the flood protection within the project limits. This meeting shall take place during the preparation of the right-of-way maps.

If this work is provided by an A-E, the A-E may include a Government and local representative at these meetings. However, the A-E shall keep the Government informed of all coordination meetings held with the facility owners. The Government alone shall determine compensability. Therefore, the A-E shall have no discussions with facility owners regarding the compensability of affected facilities.

Designers shall coordinate facility relocations and schedules as required with the facility owner. Plans for concurrent relocations, if necessary, shall be developed in conjunction with the facility owner. The proposed facility relocations shall be acceptable to the owners and the levee district and shall comply with the Government’s standards for crossings of levees and floodwalls.

If this work is provided by an A-E, each facility relocation plan must be submitted to the Government for approval. Upon approval of the plan by the Government, the A-E shall instruct the facility owner to apply to the levee district for a permit to accomplish the relocation.

No facility can be considered abandoned unless the designer acquires a letter of abandonment from the owner.

Designers shall present the relocation information on the ROW drawings, the contract plans and in the contract specifications. A-Es shall provide copies of all completed Utility Relocations Questionnaires and as-built drawings obtained from the facility owners to the Government. Designers shall also list points of contact for all relocation items in the contract specifications. The list shall include all pipelines for which the owner will provide pipeline protection. Each facility shall be tabulated on both the ROW drawings and the contract plans with the following information: Baseline Station, Owner, Description, and one of the following dispositions:

(1) DO NOT DISTURB
(2) DO NOT DISTURB-ACCESS ONLY
(3) TO BE RELOCATED BY OWNER PRIOR TO CONSTRUCTION
(4) TO BE RELOCATED BY OWNER CONCURRENT
WITH CONSTRUCTION
(5) TO BE RELOCATED BY CONTRACTOR DURING CONSTRUCTION.

2.2 Deliverables And Project Schedule

If an A-E provides these services, deliverables shall include:

(1) As-Built Drawings. The A-E shall provide the Government copies of the owners' as-built drawings.

(2) Relocation Plans. The A-E shall provide the Government copies of the owner's engineering drawings that detail the relocation plan and protection plan where necessary for approval.

(3) Relocations Correspondence. The A-E shall provide the Government a copy of all correspondence with facility owners including the questionnaires completed by the owners and letters in which owners declare facilities abandoned.

2.3 Utility Relocations Questionnaires

Sample questionnaires to be used to collect information from owners of affected facilities are included in Part B of this document.

3.0 GEOTECHNICAL

3.1 DESIGN PROCEDURE FOR EARTHEN EMBANKMENTS

The following represents the typical procedure for the geotechnical design and analysis of levee embankments. The procedures stated herein, although considered typical, are in no way implied to eliminate engineering judgment.

Factors of safety (FOS) included in this chapter are based on the EM listed below. FOS have been reviewed by an external team, and been approved by USACE Headquarters.

3.1.1 Sampling of References

Links to electronic versions of USACE and other documents are listed in **Appendix B**, if available.

Publications:

- American Society of Testing and Materials (ASTM) 1586, Standard Penetration Test and Split-Barrel Sampling of Soils.
- ASTM 1587, Thin Walled Tube Geotechnical Sampling of Soils.
- ASTM D 2487, Unified Soil Classification System
- DIVR 1110-1-400, Soil Mechanic Data, December 1998
- EM 1110-1-1804, Geotechnical Investigations, January 2001
- EM 1110-1-1904, Settlement Analysis, September 1990
- EM 1110-2-1913, Design & Construction of Levees, April 2000
- EM 1110-2-1901, Seepage Analysis and Control for Dams, April 1993
- EM 1110-2-1902 Slope Stability, October 2003
- Engineer Technical Letter (ETL) 1110-2-569, Design Guidance for Levee Underseepage, May 2005
- Engineer Technical Letter (ETL) 1110-2-575, Evaluation of I-Walls, September 2011
- TM-3-424, Investigation of Underseepage and Its Control, October 1956

Computer Software:

- Slope Stability Program based on “MVD Method of Planes” (Method of Plane Program, 3 October 2006) and the plotting program is available by contacting New Orleans District.
- Slope Stability Programs based on “Spencer’s Procedure”
- Sheet Pile Wall Design/Analysis Program (CWALSHT)

Note: While there are references in this document to specific, proprietary computer programs, these are included only as representative of the function and quality of

calculations. Other programs which can perform like analyses and provide output in similar format are acceptable. The designer shall provide detailed proof that programs selected for design or analysis are producing accurate analyses utilizing approved methodologies described herein. Programs proposed for use other than the Slope Stability Programs based on MVD Method of Planes or Spencer's Procedure will require written approval from the Chief, Engineering Division, New Orleans District. The designer is required to submit a written request to obtain approval. Supporting documentation that demonstrates the incorporation of approved methodologies described herein shall be included.

Field Investigations:

Prior to any field investigation, a thorough review of available geologic data should be conducted for the project area. This includes geologic maps, aerial photographs, satellite images, geomorphic maps, soils maps, topographic maps, existing borings, seismic data, etc., (refer to EM 1110-1-1804). This information combined with the site-specific data needs form the basis for the field investigation program. The number and depths of borings and Cone Penetration Tests (CPT) required providing adequate coverage cannot be arbitrarily predetermined but should be sufficient to fully characterize the geotechnical conditions.

For levee design, centerline (C/L) and toe borings should be taken at a maximum of every 500 ft off center (OC), with borings alternating between 5 inch continuous Shelby tube borings (undisturbed) and 3 inch Shelby tube borings (general type) or CPT **(Figure 3.1)**. Vane shear tests may also be incorporated into the subsurface investigation process at the discretion of the geotechnical engineer or geologist. The basis for the 5 inch diameter Shelby tube samples requirement is derived from an MVN study conducted within the last 10 years and successful utilization of these borings in levee designs over the past several decades. Laboratory tests from 5 inch borings taken in soft, normally consolidated soils consistently resulted in higher shear strengths than those achieved from 3 inch diameter samples. This is due to the fact that larger sample sizes will experience fewer disturbances during the sampling and extrusion processes. In addition, 5 inch samples allow for four triaxial shear tests at the same elevation, providing the geotechnical engineer with valuable information not possible with 3 inch samples.

Borrow borings are typically taken at a maximum of 500 ft OC **(Figure 3.1)**. The project engineer and geologist should consult and agree on the final boring program.

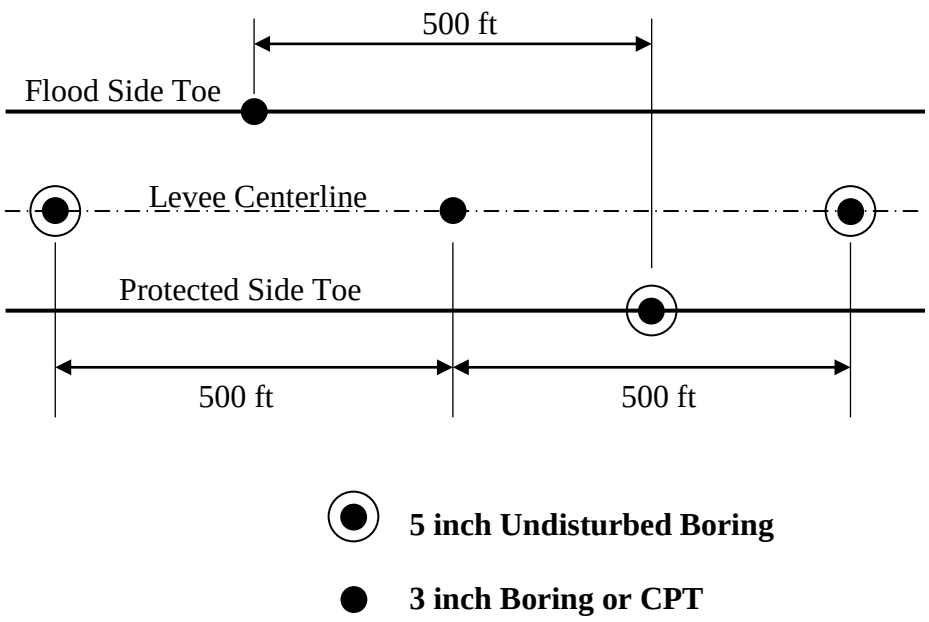

Figure 3.1 Boring Spacing

3.1.1.1 Strength Lines

The guidance outlined herein assumes test results are from 5 inch diameter undisturbed samples and supplemented with general-type (3 inch) borings or CPT. Unconsolidated-undrained triaxial (Q) tests are the predominant tests on undisturbed samples and are supplemented by unconfined compression tests (UCT). Plots of undrained strength vs. depth for CPT shall be based on an Nc value obtained by calibrating to nearby undisturbed borings. An Nc value of 20 is commonly used in southeast Louisiana soils. Strength lines should be drawn such that approximately one-third to one-half of the test data (both lab test data and CPT data) falls below the strength line. Strength lines should be drawn such that approximately one-third to one-half of the tests fall below the strengthline. If the designer does not have adequate confidence in the laboratory test data or if there is unwanted scatter in the data, he/she may choose to draw a more conservative strength line where one third of the tests fall below the strengthline. Outliers and scatter in the data can be the result of several possibilities, such as laboratory test errors, foreign material in the sample like roots or shells, and actual variance in the foundation soil properties. It is the responsibility of the designer to consider all possibilities for anomalies in the data and make appropriate design decisions. A line indicating the ratio of cohesion to effective overburden pressure (c/p) should be superimposed on the plot. Typical c/p values historically observed in southeast Louisiana are in the range of 0.22 to 0.24 (depending on local experience) but could be as much as 0.28. The c/p line may be used to assist in determining the trend of the strength line in normally consolidated clays. When an existing embankment is present, a plot of C/L strengths under the existing embankment and separate plots under natural ground to be used for toe strengths (protected side and flood side) should be developed.

3.1.1.2 Slope Stability Design Criteria

The methods of analysis for slope stability shall be both the Spencer Method and Method of Planes (MOP) using the FOS outlined in **Table 3.1**, with the design section satisfying the minimum FOS for all analysis conditions of both methods. Criteria in **Table 3.1** are based on criteria presented in EM 1110-2-1902, for new embankment dams adapted for southeast Louisiana HSDRRS. In accordance with EM 1110-2-1902 acceptable FOS for existing structures may be less than for new dams, as referenced in paragraph 3-3. Existing Embankment Dams, only when the existing structures have performed satisfactorily under the design or higher load condition. Given the unique soil conditions of southern Louisiana, the potential complexity of the levee and floodwall features, and the required intricacy of the slope stability software programs now being implemented, designers must take extreme care when utilizing software programs for these geotechnical designs. Engineers must spend appropriate time and effort in verifying that software program input correctly models the problems to be solved and that the resulting output provides a reasonable design with the most critical failure surfaces (i.e. when using SLOPEW program, critical failures surfaces and FOS shall be analyzed both with and without utilizing the optimization option).

Table 3.1 Slope Stability Design Factors of Safety

Analysis Condition	Required Minimum Factor of Safety	
	Spencer Method[1]	Method of Planes[2]
End of Construction[3]	1.3	1.3
Design Hurricane[4] (SWL)	1.5	1.3
Design Hurricane (SWL) w/ dry PS borrow pit[10]	1.3	1.3
Water at Project Grade (levees)[5]	1.4 (1.5)[6]	1.2
Water at Construction Grade (levees)[5]	1.2	N/A
Extreme Hurricane (water @ top of I-walls)[5]	1.4 (1.5)[6]	1.3
Extreme Hurricane (water @ top of T-walls)[5a]	1.4 (1.5)[6]	1.2
Low Water (hurricane condition)[7]	1.4	1.3
Low Water (non-hurricane condition)[8] S-case	1.4	1.3
Water at Project Grade Utility Crossing[9]	1.5 (1.4)	1.3 (1.2)

Notes:

1. Spencer method shall be used for circular and non-circular failure surfaces since it satisfies all conditions of static equilibrium and because its numerical stability is well suited for computer application. These FOS are based on well defined conditions where: (a) available records of construction, operation, and maintenance indicate the structure has met all performance objectives for the load conditions experienced; (b) the level of detail for investigations follow EM 1110-1-1804, Chapter 2, for the PED phase of design; and (c) the governing load conditions are established with a high level of confidence. Poorly defined conditions are not an option, and the Independent Technical Review (ITR) must validate that the defined conditions meet the requirements in this footnote.
2. MOP shall be used as a design check for verification that levee and floodwall designs satisfy historic district requirements. Analysis shall include a full search for the critical failure surface per stratum since it may vary from that found following the Spencer method**.**
3. Given the non-critical nature of the End of Construction case (i.e. no water loads, as with all other load cases), analysis of this load case is not required.
4. Applies to analyses failing toward the protected side for the SWL condition (100-year return period, 90% assurance, is authorized as the current design hurricane loading condition). Stability is analyzed for the as-constructed section with water a SWL using drained strengths

expressed in terms of effective stresses for free-draining materials and undrained strengths expressed in terms of total stresses for materials that drain slowly. For water at SWL against T-walls, MOP analysis is required as a design check only. Refer to **Section 3.4** for T-wall design criteria.

5. Applies to analyses failing toward protected side of the as-constructed levee or floodwall section for different water load cases under a short term hurricane condition. Stability for levee and floodwall systems are analyzed using drained strengths expressed in terms of effective stresses for soils classified as SM or SP and undrained strengths in terms of total stresses for soils classified as CH or CL. Engineering judgment should be used in selecting the appropriate stress analysis for soils classified as something other than CH, CL, SM, or SP.
    a. For water at the top of as-constructed T-walls, MOP analysis is required as a design check only. Refer to **Section 3.4** for T-wall design criteria.
6. The required FOS shall be increased from 1.4 to 1.5 when steady-state seepage conditions are expected to develop in the embankment or foundation. (The higher FOS only applies to the freely-draining sand stratums that can obtain the steady state condition).
7. Applies to flood side where low hurricane flood side water levels are quickly lowered. MOP analysis is required as a design check only for T-walls. See T-wall criteria later in this chapter for specific details. This analysis represents a short-term rapid drawdown situation that may occur when a hurricane passes so that winds are in a direction away from the levee. Criteria are from EM 1110-2-1902, **Table 3.1**, and note 5, considering potential erosion concerns. Stability is analyzed for the as-constructed levee section using drained strengths expressed in terms of effective stresses for free-drained strengths expressed in terms of effected stresses for free-draining materials and undrained strengths expressed in term of total stresses for materials that drain slowly.
8. Applies to flood side and protected side. MOP analysis is NOT required for T-wall designs. This analysis represents a long tern water level drawdown where steady state seepage conditions prevail. Stability is analyzed in terms of effective stresses (S-case analysis for normal loading conditions; non-hurricane loading.)
9. Applies to flood side and protected side for levees and I-walls for water at Project Grade. For the flood side analysis, low water elevation is low water produced by hurricane conditions. Stability is analyzed using drained strengths expressed in terms of effective stresses for free-draining materials and undrained strengths expressed in terms of total stresses for materials that drain slowly. The lower FOS (in parenthesis) may be used for levees that have received their final levee lift. The final levee lift is referred to the last required construction activity that ensures the levee will no longer settle below its 1% design grade.
10. The provided FOS for SWL with a dry protected side borrow pit assumes that the dry condition is temporary, such as during construction. If the dry

pit condition is long term / permanent, then the required FOS shall be 1.5 for Spencer's Method.

3.1.1.3 Reserved

3.1.2 Levee Embankment Design

A. Using C/L borings, toe borings, CPT, and applicable test results, determine stratification, shear strength, and unit weights of materials and separate alignment into soils and hydraulic reaches. Soil parameters and stratification to be used for design must be reviewed for approval by senior engineer.

B. Using cross-sections of existing conditions, determine minimum composite sections for similar topography for each reach. Spacing for cross-sections with respect to levees is typically 200 to 300 feet. When designing structures the cross section spacing is 100 feet.

C. Using consolidation test data, determine stratification for settlement purposes. Verify that the assumed gross section minus the total settlement is greater than or equal to the required net section or determine the number of subsequent lifts during project life to maintain grade higher than design grade. Also future subsidence and sea rise should be considered with information to be provided by a hydraulic engineer. Secondary consolidation does not need to be considered since this value will be negligible (typically 2% to 5% of the total estimated settlement). In addition, since T-walls are limited to 2 inches of settlement, secondary consolidation for those HSDRRS features will also be negligible. Settlement Analysis should be performed in accordance with EM 1110-1-1904.

D. Using both the Spencer Method and the MOP (Stability with Uplift program which will be provided by the Government) and design undrained shear strengths; determine the FOS of the gross section. Compare FOS to established design criteria.

If inadequate, design stability berms, reinforcing geotextile, soil improvements, or some other means to produce an adequate FOS with regard to the current design criteria. The designer should check the final design section determined by the MOP and the Spencer Method and present the FOS for both analyses. The minimum distance between the active wedge and passive wedge should be 0.7H, as shown in **Figure 3.2**, where H is the vertical distance of the intersection of the active wedge with the ground surface and its intersection with the failure surface. The 0.7H requirement will ensure that the MOP analysis will provide a kinematically feasible critical failure surface.

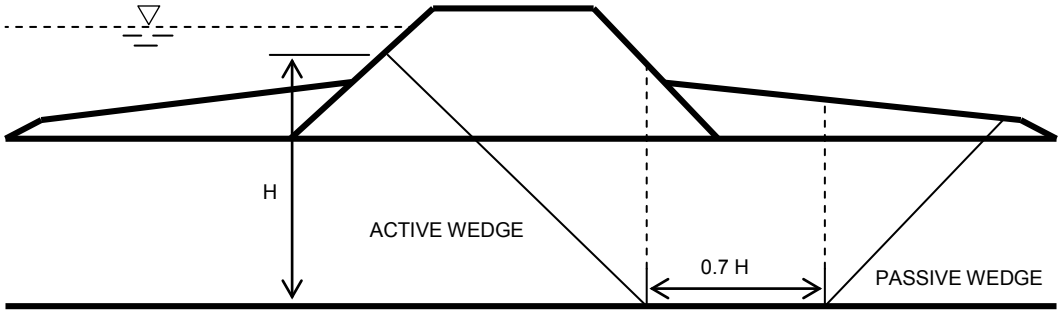

Figure 3.2 Minimum Distance Between Active and Passive Wedges (Embankments)

E. The typical soil properties given in **Tables 3.2** and **3.3** should be utilized when modeling embankment fill (in lieu of test results) for new levee placement/construction. These values are based on decades of field test data for similar levee construction in Southeast Louisiana. Properties for compacted clay fill are based on results from 12 inch lift thicknesses and compacted moisture contents ranging from -3% to +5% of the optimum moisture content. Uncompacted fill properties are based on 3 ft lifts thicknesses. Soil properties for silts, sands, and riprap are based on the MVN's experience and commonly determined values for these soil types from lab and field tests. While these values are highly recommended, the soil properties in **Table 3.2** and **Table 3.3** could be varied at the discretion of the designer if validated by site specific lab and field test data.

Table 3.2 Typical Values for Embankment Fill

Soil Type (CH or CL)	**Unit Weight (pcf)**	**Cohesion (psf)**	**Friction Angle (degree)**
Compacted Clay (90% Standard Proctor)	115	600	0
Uncompacted Clay (from dry borrow pit)	100	200	0

Notes: pcf = pounds per cubic foot
psf = pounds for square foot

All sections of HSDRRS levees (central portion, wave berms and flood/protected side stability berms) shall be designed and constructed utilizing compacted clay.

Table 3.3 Typical Values for Silts, Sands, and Riprap

Soil Type	Unit Weight (pcf)	Cohesion (psf)	Friction Angle (degree)
Silt	117	200	15
Silty Sand	122	0	30
Poorly graded sand	122	0	33
Riprap	132	0	40

Notes:

1. Weight of riprap may vary based on the filling of the riprap voids over time.
2. Undrained soil parameters for S-Case are:
   i. Silt Cohesion = 0 psf, phi = 28
   ii. Clay Cohesion = 0 psf, phi = 23
3. Engineering judgment or laboratory test data (if available) should be used in determining soil properties of clayey silts, clayey sands, and sandy silts if they exist in the foundation.

F. Reserved.

G. At pipeline crossings, the allowable FOS shall be 1.5 for the gross section for a distance of 150 ft on either side of the C/L of the pipeline or an appropriate distance determined by engineering assessment. This analysis should be performed with flood side water at the SWL.

3.1.3 Seepage Analysis

3.1.3.1 Definitions

Stage or Water Surface Elevation (WSE) – the height of water against a levee or floodwall. Water height is measured as the vertical distance above or below a local or national elevation datum.

Design Water Surface Elevation (DWSE) – the stage or water level to be used in deterministic analyses such as the geotechnical, structural stability, and seepage analyses. For the HSDRRS, the DWSE is found from the AWSE and its associated uncertainty at the selected confidence limit, where uncertainty is represented by normal distribution, and the confidence limit is 90%:

AWSE = best fit for 50% confidence level
DWSE = 90% confidence level

Project Grade – this represents the net grade of the levee or floodwall, and is sometimes referred to as top of protection, top of levee, or net levee grade. The project grade includes increases above the DWSE to account for wave action/runup, minus the overbuild that is provided for primary consolidation.

3.1.3.2 Design Assumptions and Considerations

1. The HSDRRS Seepage Design Criteria will be applied exclusively to the design of levees and floodwalls that protect areas where there would be ***very high consequences*** should the levees or floodwalls fail during a flood or hurricane event. Very high consequences entail losses of human life and/or major damage to exceptionally valuable property or critical facilities. The blanket theory mathematical analysis of Underseepage and Substratum Pressure are outlined in Appendix B of EM-1110-2-1913, Design and Construction of Levees, in conjunction with DIVR 1110-1-400 should be used. Illustrative figures can be found in these reference documents.

2. The HSDRRS Seepage Design Criteria will be used only where the uncertainty of subsurface conditions and soil properties is "***small***." To reduce the uncertainty of subsurface conditions to a "***small***" level, it is necessary to perform more than the minimum number of subsurface explorations. The minimum number of explorations is commonly described as a series of three explorations, boreholes, or soundings, performed approximately every 1,000 ft (~300 meters) – refer to ETL 1110-2-569. In addition to performing additional borings and/or soundings, the subsurface explorations should be coupled with data from geophysical testing or other supplemental investigations such as CPT designed to explore the variability in subsurface conditions. To reduce the uncertainty of soil properties to a "***small***" level, it is also necessary to perform laboratory tests to characterize soil unit weight properties. Further, post-construction monitoring of piezometric levels need to be performed, where feasible, in order to qualify for a "***small***" level of uncertainty.

3. The DWSE are associated with the 100-year flood/hurricane events. The fact that the DWSE has a 90% confidence level results in a DWSE that is more conservative than has been used previously in many instances. In addition, the water surface elevations used for design of the HSDRRS are associated with surges and waves produced by hurricane loadings, and will be sustained at peak levels for durations of hours rather than days or weeks.

4. Due to the short time frames associated with hurricane events, the inability to work in hurricane winds, and the general inaccessibility of much of the hurricane system during a hurricane, there will be no opportunity to conduct levee patrols or to flood-fight levee or floodwall distress to prevent failure.

5. To the extent possible, design criteria should reflect observed performance of levees and floodwalls that have been subjected to severe storm loadings.

6. One of the lessons from Hurricane Katrina is the need to provide ductility to the design of the HSDRRS levees and floodwalls in order to avoid the brittle failures which occurred when the floodwalls were overtopped. To this end, it is understood that a developing design principle is that regardless of the level of protection being provided, there will always be the potential for a larger storm to create a stage or water level that would reach all the way to the top of the levee or floodwall, and to even overtop the levee or floodwall. Accordingly, levees and floodwalls should be designed to withstand water levels reaching the top of the levee with a least a small margin of safety (**Tables 3.4** and **3.5**).

3.1.3.3 Calculation of Underseepage Factors of Safety

HSDRRS seepage berms, relief wells, or other seepage control measures shall be designed to meet the minimum FOS illustrated in **Tables 3.4** and **3.5**. The FOS for underseepage at the landside levee toe are computed as follows:

$$FS_g = \frac{\gamma' \times z_t}{\gamma_w \times h_o} \quad \text{, which is the same as} \quad FS_g = \frac{i_{cr}}{i_e}$$

Where:

FS_g = apparent underseepage FOS
γ' = weighted average effective (or buoyant) unit weight of soil = $\gamma_{sat} - \gamma_w$
γ_w = unit weight of water (64.0 pcf)
γ_{sat} = total, or saturated, unit weight of soil blanket

z_t = transformed landside blanket thickness
h_o = excess head (above hydrostatic) at toe determined from piezometric data or equations in EM 1110-2-1913, Appendix B **
i_{cr} = critical exit gradient = γ' / γ_w
i_e = exit gradient = h_o / z_t

The excess hydrostatic head h_o beneath the top stratum at the landside levee toe is related to the net head on the levee, the dimensions of the levee and foundation, permeability of the foundation, and the character of the top stratum both riverward and landward of the levee. The method to calculate h_o is different for various underseepage flow and top substratum conditions. The EM 1110-2-1913, Appendix B, subsection B-5 includes methods for calculating h_o for seven (7) different cases.

Table 3.4 Criteria for Safety Against Erosion and Piping at Toe of Levee

Levee/Wall Application	**Minimum Factor of Safety at Levee or Wall Toe[1] for Still Water Level Shown**	
	Design Water Surface Elevation[2]	**Project Grade[3]**
Riverine	1.6	1.3
Coastal	1.6	1.3

Notes:

1. Minimum FOS are based on steady state seepage conditions. Water surfaces in excess of Project Grade, particularly for hurricane loadings, are likely to be of such short duration that steady state conditions will not develop for this extreme condition. Safety is adequately addressed by the criteria for water surface at DWSE and Project Grade.
2. DWSE is the water level used in deterministic analyses, such as the geotechnical, structural stability, and seepage analyses.
3. Project Grade, sometimes referred to as “top of protection” or “net levee grade,” is higher than the DWSE to account for wave run-up, minus overbuild for primary consolidation.
4. Where FOS do not satisfy the criteria in **Table 3.4**, relief wells, seepage berms, cutoff walls, or other remediation measures shall be designed to satisfy the criteria shown in **Table 3.4**. If a seepage berm is used, the berm shall also satisfy the criteria for safety at the toe of the berm shown in **Table 3.5**.
5. FOS are the same for Riverine and Coastal conditions and would be the same for lake or other impounded bodies of water. Lake and other impounded bodies of water are considered Coastal conditions. Upper Plaquemines Parish Mississippi River levee and Lower St. Bernard Parish Mississippi River levee are considered riverine conditions.

Table 3.5 Criteria of Safety Against Erosion and Piping at the Toes of Seepage Berms for all Riverine and Coastal Levees

Seepage Berm Width Divided by Height of Levee[6, 7]	**Minimum Factor of Safety at Toe of Berm[2, 3] for Still Water Level Shown**	
	Design Water Surface Elevation[4]	**Project Grade[5]**
4[8]	1.5	1.2
8	1.3	1.1
12	1.1	1.0
16 or more	1.0	1.0

Notes:

1. Where a berm is designed to satisfy the criteria for safety at the toe of the levee shown in **Table 3.4**, the FOS at the toe of the berm shall satisfy the criteria shown in **Table 3.5**. FOS for intermediate berm widths shall be interpolated between values shown.
2. Minimum FOS at the berm toe are based on steady state seepage conditions. Water surfaces in excess of Project Grade, particularly for hurricane loadings, are likely to be of such short duration that steady state conditions do not develop for this extreme condition. Safety is adequately addressed by the criteria for water surface at DWSE and Project Grade.
3. Minimum allowable FOS decrease with increasing berm width because damage at the toe of a wider berm poses a smaller threat to the integrity of the levee. With a wider berm, a longer time would be required for erosion to work back to the toe and threaten the integrity of the levee.
4. DWSE is the water level used in deterministic analyses, such as the geotechnical, structural stability, and seepage analyses.
5. Project Grade, sometimes referred to as “top of protection” or “net levee grade,” is higher than the DWSE to account for wave run-up, minus overbuild for primary consolidation.
6. Berm width is measured from levee toe to berm toe.
7. Levee height is defined as the difference in elevation between Project Grade and the prevailing ground surface elevation in the vicinity of the landside levee toe.

Where seepage berms are required, the minimum berm width shall be four times the height of the levee.

3.2 I-WALL DESIGN CRITERIA

This section applies to I-walls that serve as or impact hurricane flood protection. In addition to meeting the criteria laid out in these design guidelines, I-Wall sheet pile tip elevations must meet the requirements of ETL 1110-2-575.

3.2.1 General Design Guidelines

Links to electronic versions of USACE and other documents are listed in **Appendix B**, if available.

USACE Publications:

- DIVR 1110-1-400, Soil Mechanic Data, December 1998
- Engineer Technical Letter (ETL) 1110-2-575, Evaluation of I-Walls, September 2011
- EM 1110-2-1901, Seepage Analysis and Control for Dams, April 1993
- EM 1110-2-2502, Retaining and Flood Walls, September 1989
- EM 1110-2-2504, Design of Sheet Pile Walls, March 1994
- EM 1110-2-1913, Design and Construction of Levees, April 2000
- ETL 1110-2-569, Design Guidance for Levee Underseepage, May 2005

Computer Software:

- Sheet Pile Wall Design/Analysis Program (CWALSHT)
- Slope Stability Program based on “MVD Method of Planes” (Method of Plane Program and a plotting program is available by contacting New Orleans District.)
- Slope Stability Programs based on “Spencer’s Procedure”

Walls shall be constructed using the latest datum from Permanent Benchmarks certified by National Geodetic Survey (NGS) - NAVD 88 (2004.65).

The following is a summary of protection heights for various wall systems. Maximum heights refer to exposed height of the protected side of the wall. The basis for these values are lessons learned from I-wall performance (stability and observed deflections), post-Hurricane Katrina forensic investigations, and numerical modeling (including the final IPET report dated June 2009), I-wall field tests along London outfall canal in 2007, and E-99 sheet pile wall test in 1985.

- I-walls – 4 ft maximum height
- T-walls – Typically 4 ft and greater in height
- L-walls / Kicker Pile Walls – 8 ft maximum height

Seepage, global stability, heave, settlement, and any other pertinent geotechnical analysis shall be performed in order to ensure that the overall stability of the system is designed to meet all Corps criteria.

Geotechnical engineers shall minimize the height of the wall system by designing the largest earthen section that is practical and stable for each individual project.

Floodwall protection systems are dedicated single purpose structures and will not be dependent on or connected to (non-Federal) structural or geotechnical features that affect their intended performance or stability.

In an I-wall, the steel sheet piling is a pile acting to control seepage and provide support to the structure. I-walls (steel sheet piling) should not be capped until the foundation primary consolidation has occurred from the embankment loading and/or foundation settlement is negligible. The following criterion is based on experience associated with Hurricane Katrina where some I-walls performed well and others performed poorly. I-walls shall be limited to 4 ft maximum exposed height measured from the protected side. Where existing walls exceed this maximum, fill should be added on the protected side to minimize stick-up and differential fill across the wall should be limited to 2 ft unless additional analysis is performed. I-walls are acceptable as tie-ins from structures and T-walls to levee embankments. Geotechnical Design Guidance

3.2.1.1 Global Stability Analysis

I-wall/ Embankment Slope Stability. The MOP and Spencer's Method shall be used for slope stability analysis (see **Table 3.1** for the required FOS). The system shall be designed for global stability utilizing the "Q" shear strengths for the following load cases; No Tension Crack, With Tension Crack.

The computer program CWALSHT performs many of the classical design and analysis techniques for determining required depth of penetration and/or FOS and includes application of Rowe's Moment Reduction for anchored walls. Seepage effects are included in a simplified manner in the program. The details of this program are described in the Instruction Report ITL-91-1 "User Guide: Computer Program for Design and Analysis of Sheet-Pile Walls by Classical Methods (CWALSHT) Including Rowe's Moment Reduction:" (Dawkins, 1991), which is provided with the software. Additional information on the CWALSHT program can be found in the USACE EM 1110-2-2504 Design of Sheet Pile Walls.

Methods for determining crack depths, particularly for penetrating thin layers of sand, were not well developed at this time. The crack depth is important for computation of seepage, global stability, uplift and piping, and pile tip penetration. For the present design, use the CWALSHT program to determine the tension crack depth by the fixed method utilizing a FOS of 1.0. Use the deeper/lower elevation from the two analyses. If the crack ends only a few feet (5 ft or less) above the tip, then assume crack extends to tip. If the computed CWALSHT crack depth is above the sheet pile tip, compare the hydro-static water pressure to the at-rest lateral earth pressure ($\gamma_w h_w$ vs. $\gamma_s h_s K_o$; where γ_s is the saturated unit weight of soil) and assume the crack will propagate to a point of equivalence. The crack may be assumed to be deeper, as described in **Section 3.2.1.3**

Piping and Seepage Analysis, but shall be limited in depth to a point no deeper than the sheet pile tip. Also, because saturated granular soils will not sustain a crack, the designer must determine if the crack will propagate through a thin sand layer to an underlining clay stratum.

1. For global stability, full hydrostatic head shall be used to the depth of the crack at the face of the I-wall (flood side). Protected side piezometric conditions used for stability analysis shall be based on seepage evaluation as described in **Section 3.2.1.3** Piping and Seepage Analysis below.
2. To model a tension crack that extends to the sheet pile tip, perform the following for global slope stability. For a full clay foundation, remove all soil above the tension crack tip on the flood side of the wall. Check failure mechanisms in the vicinity of the tip at locations above and below the sheet pile tip for failure surfaces that are the most critical. Failure surfaces with lower FOS may exist if weaker layers are present near the sheet pile tip.
3. These FOS have been reviewed by an external team and approved by USACE Headquarters. The basis for these values is Appendix C of EM 1110-2-1913, Design and Construction of Levees, April 2000, and ETL 1110-2-569, Design Guidance for Levee Underseepage, May 2005.

3.2.1.2 I-wall Sheet Piling Tip Penetration

Wall Stability

Use the CWALSHT program to determine the required tip by the fixed surface wedge method or Coulomb earth pressure coefficient method with FOS applied to **both** active and passive soil parameters. The deeper computed tip elevation shall be used for design. Wave loads are not required for slope stability analyses on I-Walls. This is unnecessary since I-Walls are limited to 4ft stickup and any impact from the wave forces will be bracketed with upper and lower bound analyses at SWL and Top of Wall. For T-Wall design, wave forces are directly transferred to the base slab and support piles; therefore, wave forces are not required in corresponding slope stability analyses. (FOS with Load Cases - (CWALSHT program determines depth of tension crack)

"Q" –Shear Strengths

a. Cantilever Wall
   i. FOS = 1.5: Water to SWL plus wave load shall be furnished by the hydraulic engineer.
b. Bulkhead Wall
   i. For walls with fill differential of greater than 2 ft from one side of the wall to the other, a bulkhead analysis should be performed.
   ii. FOS = 1.5: Low water for hurricane conditions, bulkhead analysis if applicable.

c. Design check.
   i. This is not typical hurricane design case but shall be checked to ensure a bracket of load envelopes and critical loads are considered.
   ii. (Case 1) FOS = 1.3: Water to top of all plus no wave load.

"S" – shear strengths

a. FOS =1.5; Normal low water (not low water for hurricane conditions bulkhead analysis) if applicable.

Minimum Tip Penetration

In some cases, especially Q-case penetrations derived for low heads, the theoretical required penetration could be minimal. In order to ensure adequate penetration to account for unknown variations in ground surface elevations and soil, the embedded depth (D) of the sheet pile as shown in **Figure 3.3** shall be the greatest penetration of:

a. Three times the exposed height (H) on the protected side of the wall as shown in **Figure 3.3**. The embedment of wall shall be based on the lower ground elevation against the wall as shown on the figure below. In the case shown, the lowest ground surface against the wall is on the flood side.
b. 10 ft below the lower ground elevation.
c. Extending sheet piling through very shallow pervious strata (such as silt, sand, or peat) is good engineering practice even if the theoretical calculations do not require such lengths. This will prevent possible seepage if the strata are saturated.
d. The soil type "peat", as intended in this chapter, describes soils typically encountered in southern Louisiana with a fibrous or amorphous aggregated of macroscopic and microscopic fragments of partially decayed vegetative matter.

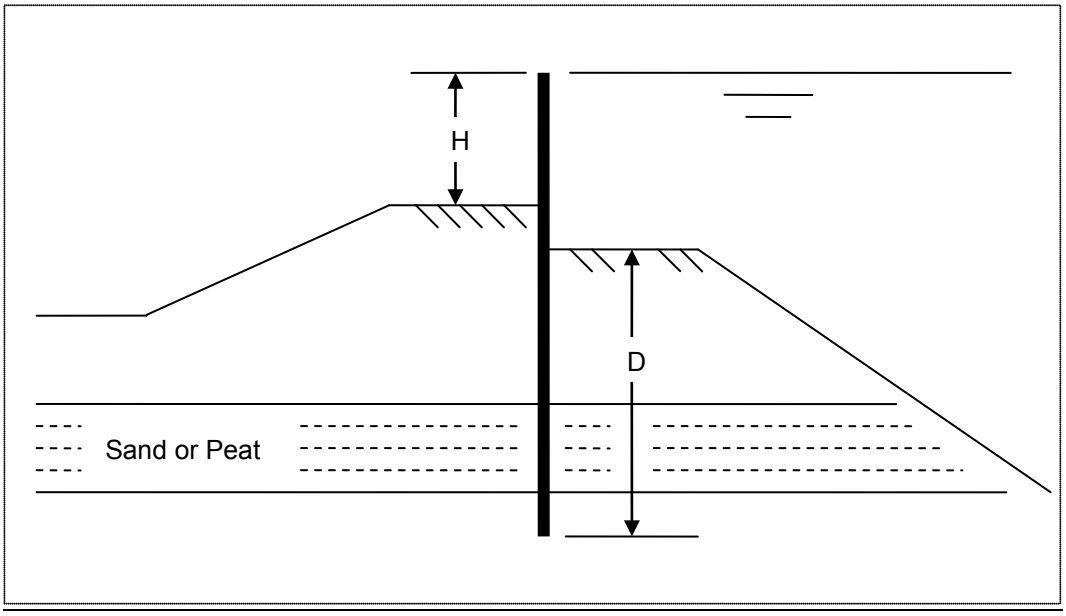

Figure 3.3 Minimum Tip Penetration Depth

3.2.1.3 Piping and Seepage Analysis

Piping

The I-wall must be designed for seepage erosion (piping) along the wall. Analysis shall be based on water to the top of the wall. This analysis can be performed by various methods such as flow nets, Harr's method of fragments, Lane's weighted creep ratio, or finite element methods. Some of these methods are more robust than others; therefore selection of the analysis method should be made based on the complexity of the design. The seepage analysis shall consider the tension crack which will shorten the seepage path. When the levee and foundation are constructed entirely of clay, the potential for developing a steady state seepage condition along the sheet piling is negligible. However, this should be checked by the designer and engineering judgment should be used to determine if the sheeting piling needs to be extended to meet this criteria.

If a sheet pile penetrates an aquifer, a standard seepage analysis shall be performed in accordance with the applicable portions of EM 1110-2-1901, EM 1110-2-1913, ETL 1110-2-569, and DIVR 1110-1-400 (for CEMVD). I-walls shall be checked for seepage erosion (piping) by evaluating the critical seepage gradient as described in EM 1110-2-1901 for uplift and heave. In this case, the vertical distance between the tip and the aquifer would be considered to be the flood side blanket thickness. The head at the levee toe can then be calculated using EM 1110-2-1901 to check for exit gradient and heave. For sheet piles that tip in near proximity to an aquifer, engineering judgment should be used to determine if this standard seepage analysis is appropriate for those designs.

If the computed crack depth is within 5 ft of an aquifer, the crack shall be assumed to extend to the aquifer **(Figure 3.4)**. For specific cases where the geology of the foundation is well known and the designer is confident that the sand strata is more than 2.0 ft below the tip of the sheet pile, the crack shall extend only to the depth calculated from the method described in **Section 3.2.1.1**. A well know geology shall have field investigations (boring and/or CPT data) spaced closer than 100 ft.

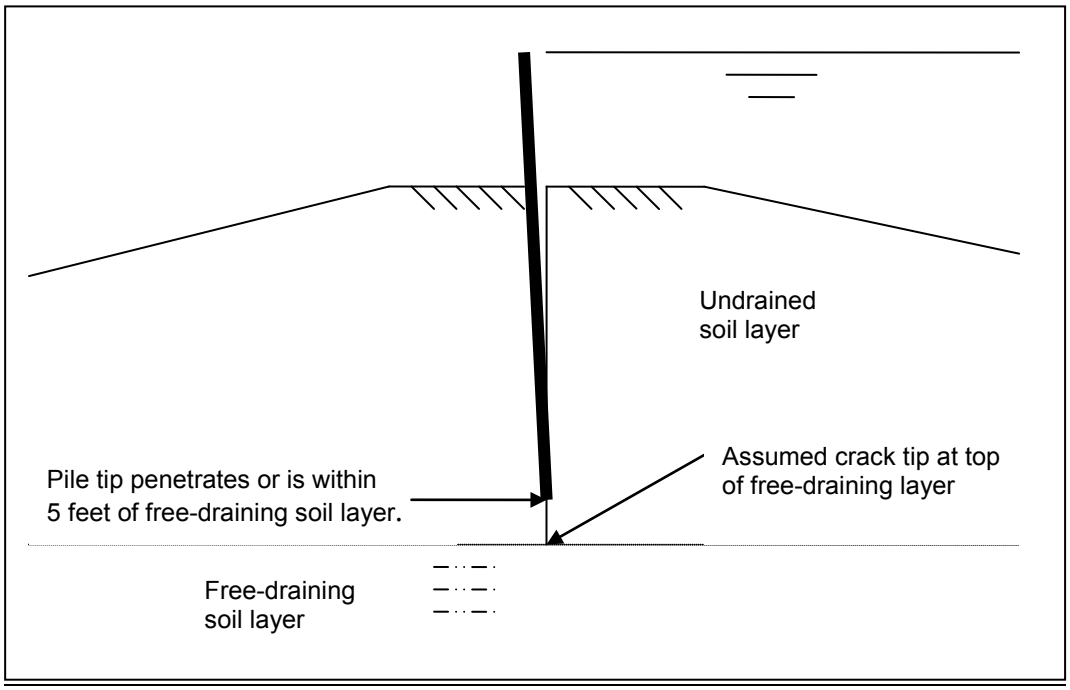

Figure 3.4 Computed Crack Depth Near Aquifer

Seepage

Seepage analysis should be checked in accordance with the applicable portions of EM 1110-2-1901, DIVR 1110-1-400, and ETL 1110-2-569.

3.2.1.4 Heave Analysis

In cases where the tension crack extends to the sheet pile tip elevation, heave analysis should be checked. The required FOS for a total weight analysis is 1.20. For tension cracks to the sheet pile tip elevation, the pressure at the sheet pile tip should be based on the full hydrostatic head **(Figure 3.5)**. The FOS for computing heave is defined as:

$$FS_h = \frac{\gamma_{sat} \times z}{\gamma_w \times h_w};$$

γ_{sat} = saturated unit weight soil (weighted average of all soil strata)
γ_w = unit weight of water
z = overburden thickness
h_w = pressure head

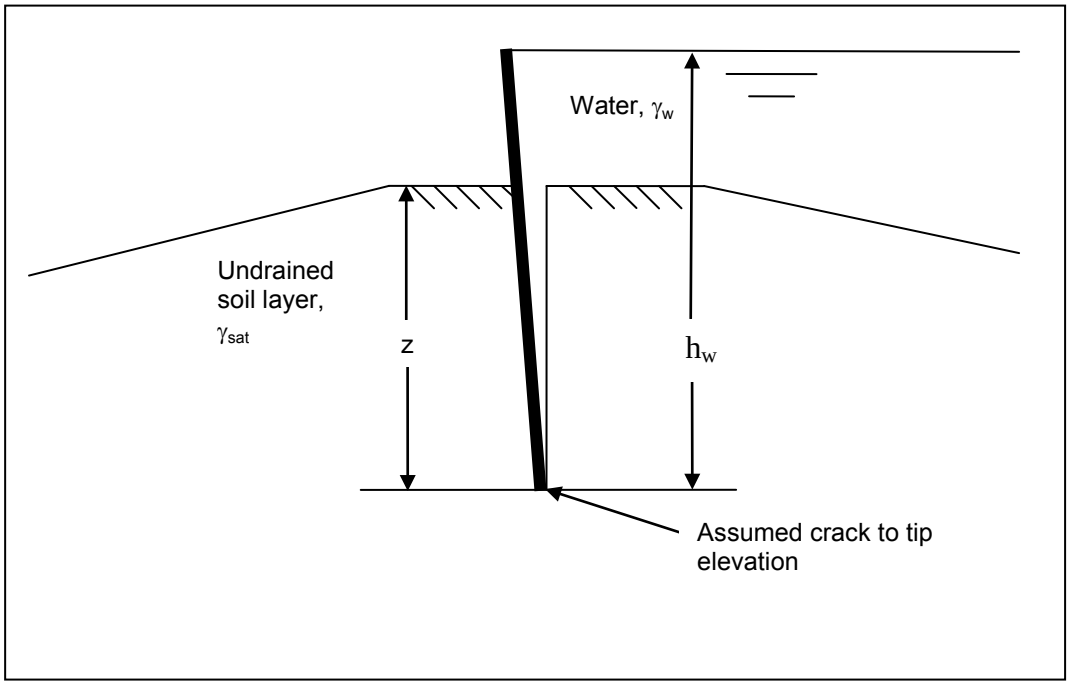

Figure 3.5 Computed Heave Factor of Safety

3.2.1.5 Deflections

The determination of allowable deflection has not yet been made and will be finalized after further evaluating the E-99 test wall and IPET results. Until that time, a deflection analysis will not be required when the exposed I-wall heights are limited to 4 ft as described in **Section 3.2.1** General Design Guidance.

3.3 AXIAL PILE CAPACITY

Links to electronic versions of USACE and other documents are listed in **Appendix B**, if available.

Publications:

- EM 1110-2-2906, Design of Pile Formations, January 1991
- Interim Downdrag and Drag Load Guidance for Pile Founded Structures, April 2009 (Reproduced here in **Section 3.3.2.1**)
- Interim Guidance, Revised "LPILE Method" to Calculate Bending Moments in Batter Piles for T-Walls Subject to Downdrag, December 2010 (**Appendix F**)

In addition, the following are typical design considerations used by MVN:

- For cohesion vs. adhesion **(Figure 3.6)**.
- Typical values for the angle of friction between soil and pile (δ) can be found in **Table 3.11**.
- Limited overburden stresses to 3,500 psf for both the "Q" and "S" case.
- No tip bearing for Q-case in clays where cohesion is less than 1,000 psf.
- Tip bearing may be considered at any depth in the S-case.
- Typical values for SM = 30º and SP = 33º for no shear testing.
- Tip bearing in cohesionless strata shall be limited to strata deemed competent and clearly present, based on sufficient field data.
- S-case in clay should only be evaluated for the End of Construction (Dead Load) case.
- Pile batter shall not be considered in the determination of skin friction capacity.

Recommended FOS for MVN projects are shown in **Table 3.7**. In addition, refer to **Section 5.0** Structures for additional FOS for specific load cases. While the values given in **Table 3.8** through **Table 3.11** are highly recommended, these values may be varied at the discretion of the designer if validated by site specific lab and field test data.

Table 3.6 Reserved

Table 3.7 Recommended Minimum Factor of Safety Axial Pile Capacity

Method of Determining Capacity	Loading Condition	Minimum Factor of Safety	
		Compression	Tension
Theoretical prediction verified by static pile load test	Q-case	2.0	2.0
	S-Case	1.5	1.5
Theoretical prediction verified by pile driving analyzer	Q-case	2.5	3.0
	S-Case	1.5	1.5
Theoretical prediction NOT verified by load test	Q-case	3.0	3.0
	S-Case	1.5	1.5

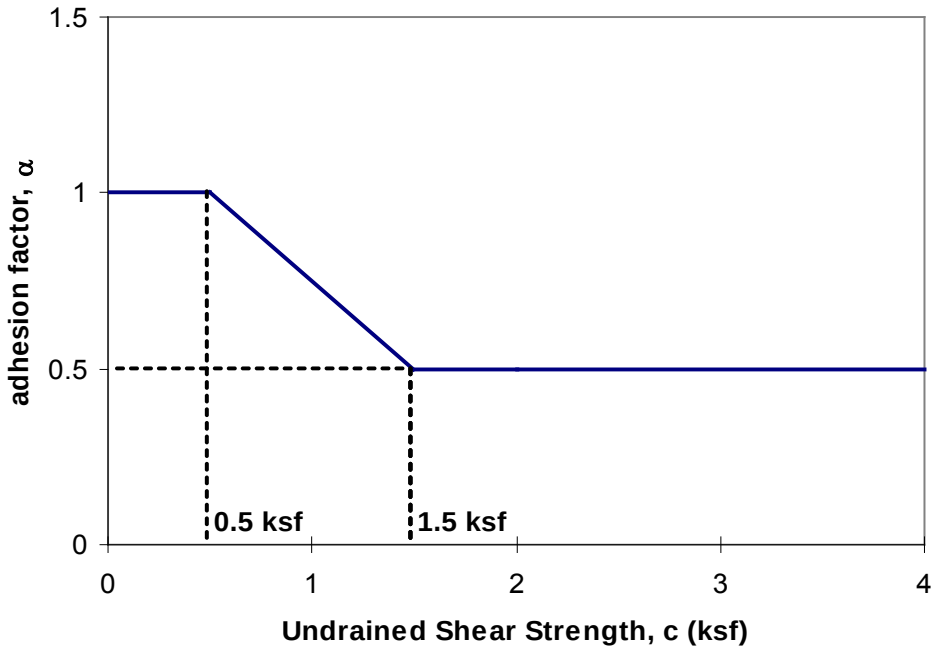

Figure 3.6 Values of Adhesion Factor (α) vs. Undrained Shear Strength

Table 3.8 Q-case Soil Dependent Pile Design Coefficients

Q-Case			
Type	**ϕ**	**Nc**	**Nq**
Clay	0	9.0	1.0
Silt	15	12.9	4.5
Silty Sand	30	0	22.5
Poorly Graded Sand	33	0	30.0

Table 3.9 S-case Soil Dependent Pile Design Coefficients

S-Case			
Type	**ϕ**	**Nc**	**Nq**
Clay	23	0	10.0
Silt	28	0	19.5
Silty Sand	30	0	22.5
Poorly Graded Sand	33	0	30.0

Table 3.10 Lateral Earth Pressure Coefficients for Pile Design

	Displacement Piles		**Non Displacement Piles**	
	Compression (Kc)	**Tension (Kt)**	**Compression (Kc)**	**Tension (Kt)**
Sand	1.25	0.70	1.25	0.50
Silt	1.0	0.50	1.0	0.35
Clay	1.0	0.70	1.0	0.70

Table 3.11 Angles of Friction Between Soil and Pile **(δ)**

Pile Material	**δ**
Steel	0.67ϕ to 0.83ϕ
Concrete	0.90ϕ to 1.0ϕ
Timber	0.80ϕ to 1.0ϕ

A range of values of the angle of friction between soil and pile for various pile types are shown in **Table 3.11**. Typical values used in design for steel, timber, and concrete piles are 0.67, 0.80, and 0.90, respectively.

For Steel H-piles, skin friction capacity is determined by assuming half of the surface area is soil against steel and the other half is soil against soil. When calculating end bearing capacity, designers should use the area of the steel or approximately 60% of the end-block area. The latter end bearing method should only be used in very stiff soils and validated with field load test data.

For Pipe Piles (Steel or Concrete), skin friction capacity is determined by assuming the entire surface area is soil against steel/concrete. When calculating end bearing capacity, the designer should consider the development of an interior soil plug. The final end bearing value shall be established as the minimum value between (1) the shaft resistance along the soil/inner pile wall interface and (2) the tip resistance considering cross-sectional area of pile.

3.3.1 Lateral Pile Capacity

When lateral pile loads are anticipated the modulus of soil reaction should be determined either by empirical equations or through the development of p-y curves for each stratum.

USACE and industry standard design limits deflections for pile founded structures. By limiting deflections, designers are ensuring adequate lateral capacity of piles since this capacity is a direction function of the overall deflection of the structure. Except for very special circumstances, lateral pile capacity is not an issue since piles are typically battered and estimated deflections are minimal.

3.3.1.1 Monotonic Lateral Load Testing

a. *General.*
The main purpose of a lateral load test is to verify the values of nh or Es used in design. The value of the cyclic reduction factor used in design can also be verified if the test pile is cyclicly loaded for approximately 100 cycles. The basis for conducting a lateral load test should be ASTM D3966-81 (Item 24) modified to satisfy the specific project requirements.

b. Applying Load.

A lateral load test is most easily conducted by jacking one pile against another. In this manner, two lateral load tests can be conducted simultaneously. When applying the lateral load to the pile, it is important to apply the load at the ground surface with no restraint at the pile head. This gives a free-head pile boundary condition and makes the data easy to reduce to curves of n_h or Es versus pile top deflection. The loads are applied with a hydraulic jack. A spherical bearing head should be used to minimize eccentric loading.

c. Instrumentation.

The minimum amount of instrumentation needed would be dial gages to measure lateral pile head deflection and a load cell to measure applied load. A load cell should be used to measure load instead of the pressure gage on the jack because pressure gage measurements are known to be inaccurate. Additional instrumentation could consist of another level of dial gages so the slope at the top of the pile can be calculated, and an inclinometer for the full length of the pile so that lateral pile deflection at any depth along the pile can be calculated. If p-y curves are necessary for the pile foundation design, then strain gages along the pile to measure bending moment are needed. However, since the purpose of lateral load tests described in this section is to verify or determine pile-soil properties to be used in the normal design of a civil works project, the use of strain gages along the length of the pile is not recommended. Accurate strain-gage data are difficult to obtain and only of value in research work where p-y curves are being developed. Strain gages should not be installed by construction contractors because they do not have the necessary expertise to install them. If strain gages are used, consultants experienced in their use should be hired to install them, and record and reduce the data.

d. General Considerations.

1. *Groundwater. The location of the ground-water table has an effect on how laterally loaded piles behave. For this reason it is important to have the groundwater table during testing as near as possible to the level that will exist during operation of the structure.*

2. *Load to Failure. It is important to carry the load test to failure. Failure is defined as when the incremental loading can not be maintained.*

3. *Location of Test Site. Piles should be located as near to the site of the structure as possible and in similar materials.*

4. *Reporting Test Results. Accurate records should be made of the pile installation, of load testing, and of the load test data to document the test.*

3.3.1.2 Cyclic Lateral Load Testing

a. ***General.*** *The main purpose of a cyclic lateral load test is to verify the value of the cyclic loading reduction factor (Rc) used in design. Approximately 100 cycles of load should be used in a cyclic load test. The load test should be conducted according to ASTM D3966-81 (Item 24) modified as necessary for cyclic loading and specific project requirements. The instrumentation, equipment, and test layout necessary for conducting the cyclic load test is similar to that required for the monotonic lateral load test.*

b. ***Procedure.*** *Generally the cyclic lateral load test would be done in combination with the monotonic lateral load test on the same piles. Since repeated testing of the same pile can cause permanent nonrecoverable deformations in the soil, the sequence of testing is important. One sequence for doing the monotonic and cyclic lateral load test is outlined as follows: The designer must first select the load level of the cyclic test. This may be done from a known load level applied to the pile founded monoliths or a deflection criterion. A deflection criterion would consist of loading the load test piles to a predetermined deflection and then using that load level for the cyclic load test. Using the cyclic load level, the test piles would be cyclically loaded from zero loading to the load level of the cyclic load test. This cyclic loading procedure would be repeated for the number of cycles required. Dial gage readings of lateral deflection of the pile head should be made at a minimum at each zero load level and at each maximum cyclic load level. Additional dial gage readings can be made as necessary. After the last cycle of cyclic loading has been released the test piles should then be loaded laterally to failure. That portion of the final cycle of load to failure above the cyclic test load can be superimposed on the initial cycle of loading to get the lateral load-deflection curve of the piles to failure.*

3.3.2 Effects of Settlement of Piles

3.3.2.1 Downdrag and Drag Load Guidance for Pile Founded Structures

The following is guidance for negative skin friction, developed by the St. Louis, MO District Corps of Engineers in April 2009:

Purpose

The purpose of this memorandum is to provide design guidance regarding negative skin friction induced drag load and downdrag on pile supported structures. Specifically, this memo presents a relatively simple, rational way to determine drag load and downdrag.

Terminology
The terminology that requires definition is listed below and generally illustrated in Figure 1.

Negative skin friction (nsf) – downward acting shear stress around the sides of a pile caused by settlement of the soil relative to the pile

Drag load – a downward acting force along the pile due to the accumulation of negative skin friction

Downdrag – the downward movement or settlement of a pile in response to negative skin friction

Neutral plane: The point where equilibrium exists between the permanent downward acting loads (dead loads + non-transient live loads + drag load) and the resisting upward acting positive skin friction and mobilized toe resistance. It is also the location where the settlement of the pile and the surrounding soil are equal.

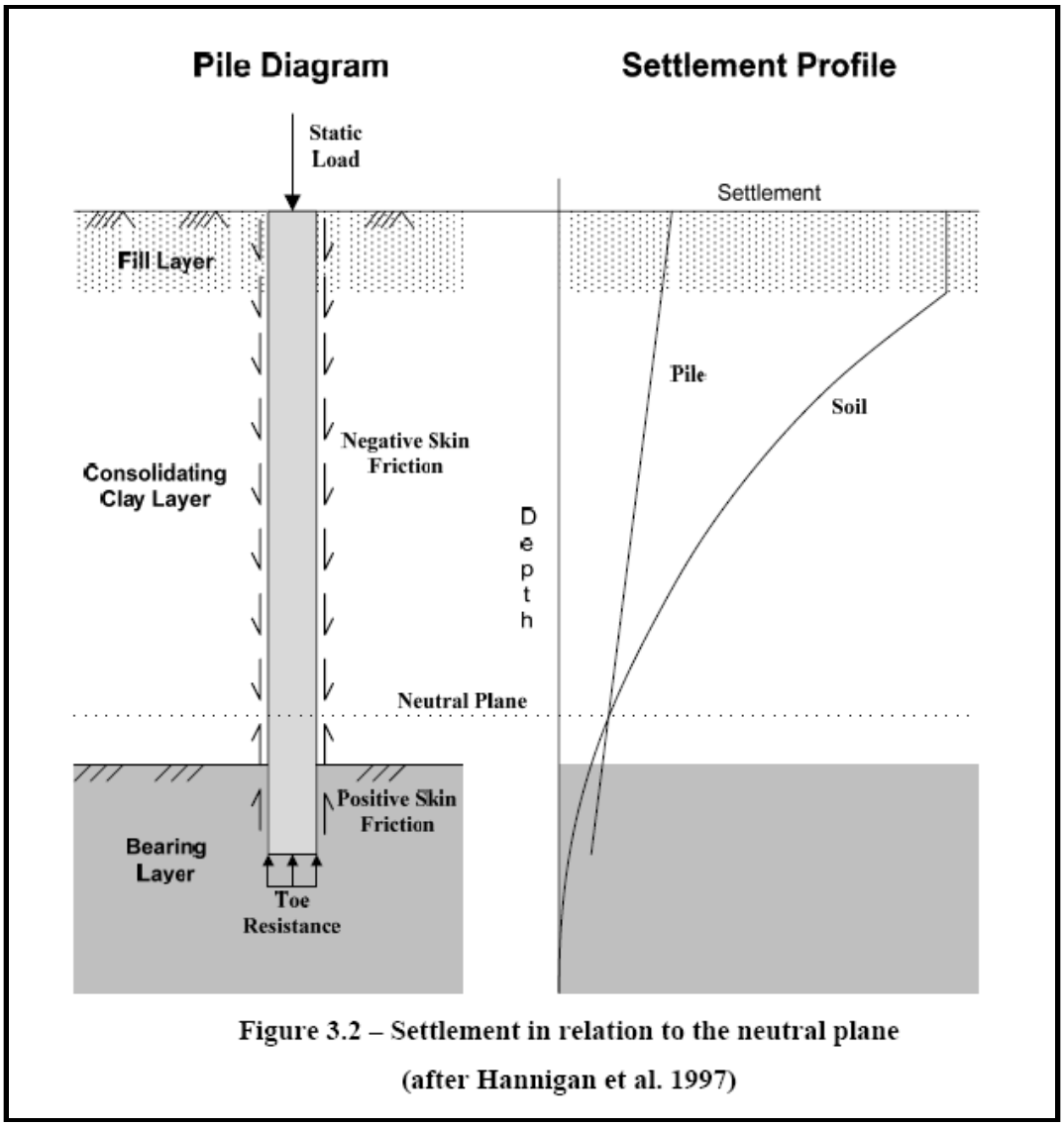

Figure 1 (from Greenfield and Filz)

Force Equilibrium Approach (Basic Fellenius Method)

The Fellenius Method evaluates the effects of negative skin friction on a pile foundation by determining an equilibrium condition of the pile loads and resistances. This equilibrium condition is then used to assess the pile settlement. This method incorporates conventional geotechnical computations providing more wide spread application to practicing geotechnical engineers.

Assumptions of this approach:

- *Positive and negative skin friction are fully mobilized and the unit values are the same at the same depth*
- *Toe resistance of the pile is fully mobilized*
- *Length of the transition zone from negative to positive skin friction is not considered*

In reality, only as much resistance at the pile toe as needed to resist the downward acting loads will be mobilized. In addition, the skin friction in the transition zone from negative to positive skin friction may not be fully mobilized. These factors would affect the magnitude of the computed drag load, location of the neutral plane, and the settlement of the pile. The Fellenius Method provides a well established, conservative approach to compute drag load and downdrag due negative skin friction acting on a pile founded structure.

Step-By-Step Design Approach (single pile)

1. *Compile all applicable soils data to create a geologic profile and determine soil parameters to complete a static axial pile analysis and consolidation settlement analysis due to external loading.*
2. *Determine the ultimate pile resistance (capacity) to develop the resistance curve of the pile. Plot the fully mobilized toe resistance (Rt) at the depth or elevation of the pile toe. Plot the resistance (Rs) due to positive skin friction increasing from the pile toe as depth decreases up the pile shaft. This defines the resistance curve shown in Figure 2.*
3. *Develop the load curve by plotting the dead load (Qd) or non-transient loads at the pile head. Then plot the drag load (Qn) due to negative skin friction increasing with depth from the pile head. This defines the load curve shown in Figure 2. Note that transient live load is not included here.*
4. *The intersection of the load and resistance curve determines the location of the neutral plane. The maximum load in the pile occurs at the neutral plane (static load at the pile head plus the drag load). This load should be less than the allowable structural capacity of the pile.*
5. *Determine the ultimate consolidation settlement due to the external loading (fill placement, lowering groundwater level, etc.) versus depth as if the pile foundation were not present. Use conventional geotechnical practice to determine effective stress increases, define the soil compressibility, and compute settlement.*

6. *Compute the elastic compression in the pile due to the static load (dead loads + non-transient live loads + drag load) above the neutral plane. Use an average of the load at the pile head and the maximum load at the neutral plane. Elastic compression becomes a larger contributor to the settlement in long, toe bearing piles.*
7. *Determine the total settlement at the pile head which is the elastic compression of the pile plus the settlement at the neutral plane due to the pile-soil interaction. This total settlement value should be less than an established tolerable level (serviceability criteria).*

An example of determining downdrag and drag load for a single pile is included in Figure 3.

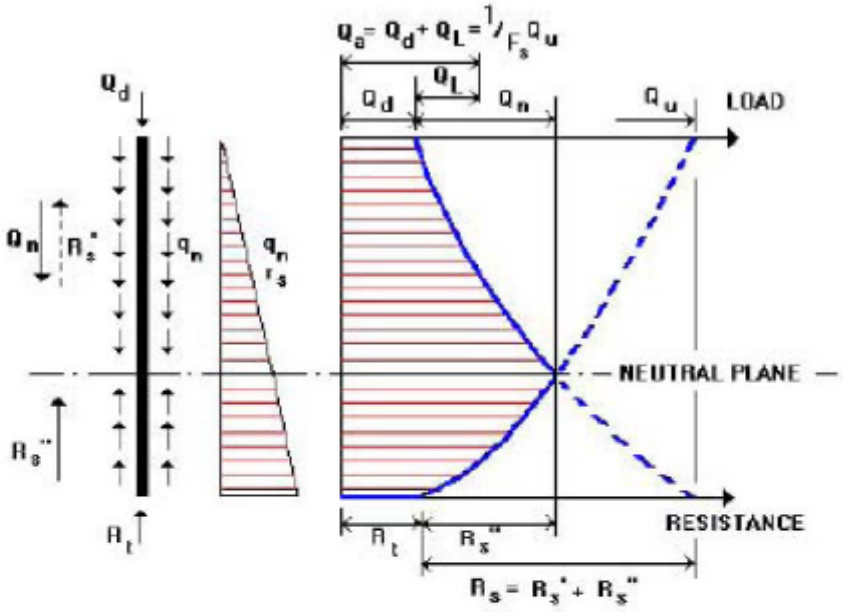

Q_d = dead load (non-transient) at the pile head (force)
Q_L = live load (transient) at the pile head (force)
Q_n = drag load due the accumulation of negative skin friction (force)
q_n = unit value of negative skin friction (force/area)
Q_u = ultimate pile resistance or capacity (force), note the drag load does not affect the pile capacity
Q_a = allowable pile resistance or capacity (force) is equal to the ultimate pile capacity divided by an appropriate factor of safety and should equal/exceed the sum of the dead and live loads
r_n = unit value of positive skin friction (force/area)
R_s'' = resistance due to positive skin friction developed below the neutral plane (force)
R_s' = resistance available above the neutral plane due to positive skin friction (force), occurs when negative skin friction is converted to positive skin friction by downward movement of the pile relative to the soil
R_t = fully mobilized resistance at the pile toe (force)

Figure 2 (from Fellenius)

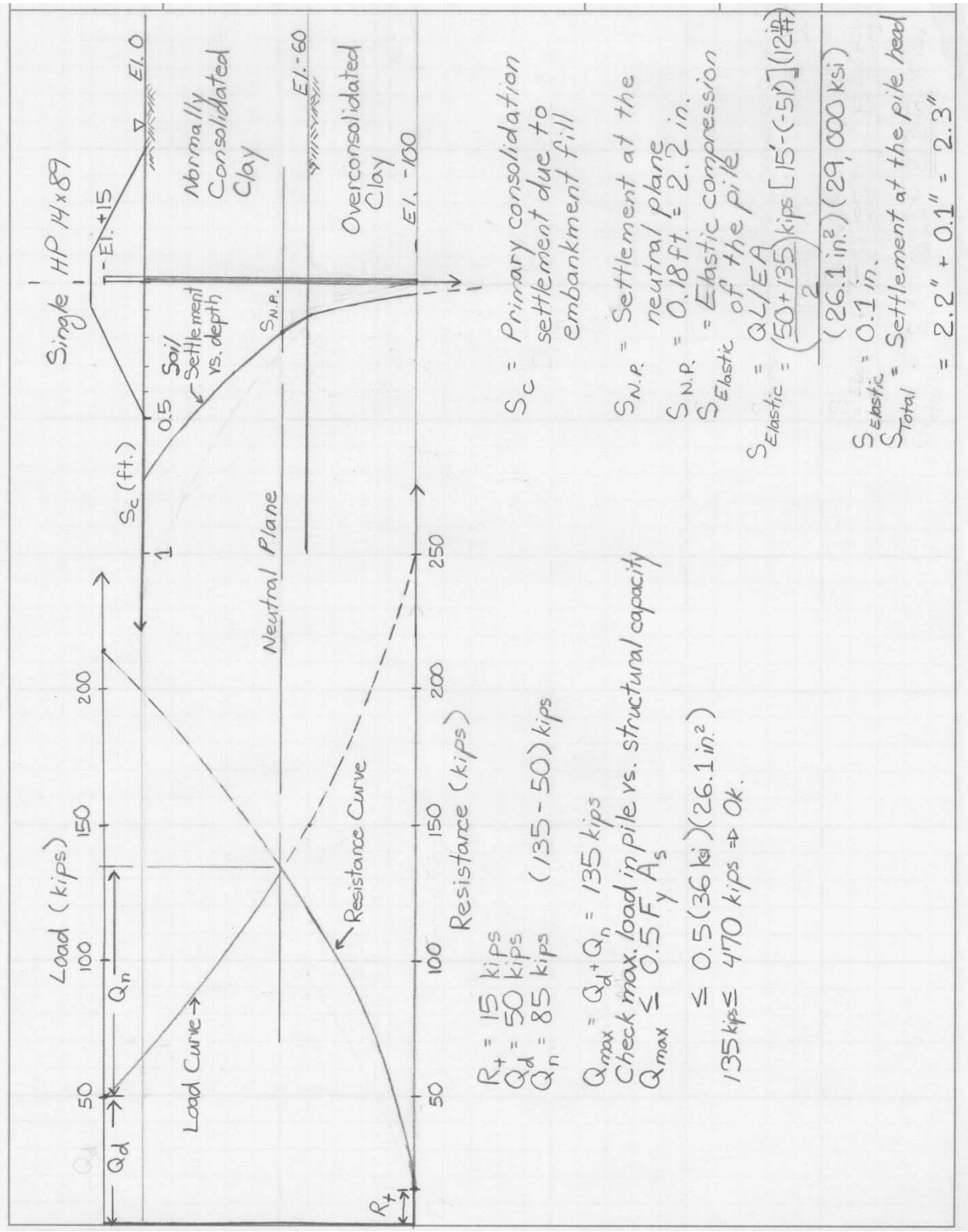

Figure 3 Conceptual Example of Downdrag and Drag Load Determination

Key Points

- *The drag load acting along a pile foundation does not decrease the bearing capacity (geotechnical capacity) of the pile. By definition, a bearing or plunging failure of a pile is the pile moving past the soil and requires mobilization of positive skin friction along the entire length of the pile shaft.*
- *Drag load plus the static load at the pile head are permanent long-term loads. This load combination must be less than the structural capacity of the pile or the pile will fail.*
- *Drag load prestresses or stiffens the pile-soil system, reducing the incremental deflections that would otherwise occur from live loads. Drag loads are normally not a problem, only creating a concern in very long, toe bearing piles where the neutral plane is very deep and the maximum load in the pile can become excessive.*
- *Transient live loads (such as a hurricane loading) push the pile down relative to the surrounding soil, converting negative skin friction to positive skin friction temporarily reducing drag load.*
- *The allowable bearing capacity (Qa = Qu / FS) of a pile founded structure must equal or exceed the sum of the dead and live loads transferred at the pile head. Again, drag load due to negative skin friction does not affect this calculation.*
- *The structural connection of the pile and sheet pile to the pile cap must be properly designed to avoid pull out of a pile placed into tension by drag load (e.g. a sheet pile cutoff beneath a pile supported T-wall or corner pile of a large pile group with a rigid pile cap).*
- *Pile toes should be founded in a stiff soil layer in order to reduce downdrag settlement. Friction piles should be carefully evaluated and used with caution because settlements of "floating" friction piles may be large when subject to drag loads.*

Pile Groups

The distribution of negative skin friction to a pile group is a relatively complex phenomenon. Drag loads for the exterior piles are larger than drag loads for interior piles in a group. While drag loads in a pile group are expected to vary, the drag load for any given pile in a group would be expected to be less than or at most equal to the drag load determined for a single pile. So if the drag load determined for a single pile by the method previously presented is not a concern; no more work needs to be done. If computed drag loads are an issue, more advanced methods of analysis are required. These potentially range from applying drag load reduction coefficients based on pile location and spacing to conducting three dimensional numerical analysis. The location of the neutral plane for a pile group can be determined in the same manner as was described for a single pile. Settlement of the pile group needs to be analyzed, and using an equivalent footing concept is recommended. This can be done by placing an imaginary footing equal to the pile cap dimensions at the neutral plane, loading the equivalent footing with the dead load and non-transient live load that occur at the pile cap, and then

computing the settlement below this "equivalent footing". The stiffening effect of the piles on the soil between the neutral plane and pile toes can be accounted for by proportioning the soil modulus and pile modulus by area to determine a combined modulus. Normally, the combined modulus value is large enough that the settlement in this zone is negligible and the equivalent footing can simply be placed at the pile toe elevation. The stress changes induced by the equivalent footing are added to the other stress changes that cause settlement, e.g., fill placement, drop in the ground water level), and then the settlement of the ground at the elevation of the neutral plane is calculated. The compression of the piles above the neutral plane is computed and added to the settlement of the neutral plane to determine the total settlement of the pile cap.

Other Considerations

If battered piles are located in settling soils, bending is induced in the piles. The general guidance is simply to avoid battered piles in settling soils, especially when the settlements are large. Battered piles are normally expected to deflect or move with the settling soil. If battered piles located in settling soils cannot be avoided, the bending in the piles induced by the settling soils should be evaluated to determine the effect on the structure's performance. Such an evaluation would normally require advanced numerical modeling.

***References*:**

Greenfield, M. and Filz, G. (2009). "Downdrag and drag load on piles." CPGR #56, Center for Geotechnical Practice and Research, Virginia Polytechnic Institute and State University.

Fellenius, B. H. (2004). "Unified design of piled foundations with emphasis on settlement analysis." Geo-Institute Geo-TRANS Conference, ASCE Geotechnical Special Publication.

Fellenius, B. H. (2006). Basics of foundation design. Electronic Edition, www.Fellenius.net, 275 p..

Terzaghi, K., Peck, R. B., Mesri, G. (1996). Soil mechanics in engineering practice, third edition.New York, NY. John Wiley & Sons, Inc.

3.3.2.2 Settlement Induced Bending

Battered piles that have the potential to experience bending moments induced by downdrag acting on batter piles that support T-Walls must be evaluated according to the latest criteria, (see Interim Guidance, Revised "LPILE Method" to Calculate Bending Moments in Batter Piles for T-Walls Subject to Downdrag, **Appendix F**). The criteria incorporates project-specific nonlinear settlement profiles throughout the LPILE method.

3.3.3 Pile Drivability

Considerable engineering experience and judgment are necessary when evaluating or specifying the suitability of driving equipment. The designer should be aware that certain equipment and methods for pile installation have been known to reduce axial and lateral resistance or damage the pile in certain situations. Designer approval of the contractor's methods and equipment is necessary to ensure the pile can be driven without damage to the pile or soil. Field variations from previously approved methods and equipment require re-submittal to the designer. Piles are normally driven by impact or vibratory-type hammers. The installation of a concrete pile requires special consideration due to its inherent low tensile strength. For this reason, the use of diesel hammers should not be allowed to drive concrete piles.

A wave equation analysis is a means for a designer to evaluate pile drivability, hammer selection, anticipating driving stresses, and establishing penetration rates. Data obtained from the wave equation analysis should be used with judgment for friction piles since pile set-up may occur. A wave equation analysis is recommended for all but the simplest of projects. The use of special driving assistance, such as pile shoes, jetting, preboring, spudding, and followers should be carefully evaluated by the designer, and should be clearly defined in contract specifications. EM 1110-2-2906 should be consulted for further information.

3.3.4 Pile Tests

A pile test (pile load test, pile driving analyzer, pile drivability test) may be conducted separately or concurrently. A pile load test, which may consist of an axial or lateral load test, is intended to verify the theoretically computed capacity of a pile foundation. A pile driving analyzer is used to assess the capacity of a pile, as well as to evaluate shaft integrity and investigate driving stresses and hammer energy during pile installation. A pile drivability test can be used to determine data on drivability of selected types of piles with selected types of hammers. Field pile tests are warranted if a sufficient number of production piles are to be driven and if a reduced FOS (increased allowable capacity) will result in a sufficient shortening of the piles so that a potential net cost savings will result.

Depending on the type of pile test performed, the minimum required FOS may be adjusted **(Table 3.7)**. If the results of a pile test are used to project pile capacity for tip elevations other than those tested, extreme caution should be exercised. Pile tests should be conducted within the footprint of the structure, otherwise as near as possible. Casing of the test pile may be required to model the effects of a structure excavation or to eliminate capacity above a particular elevation (critical elevation of unbalanced loads). Production piles should be driven with the same hammer and other driving equipment and methods that will be used for the test pile.

The waiting period between the driving of a test pile and performing an axial or lateral pile load test should allow sufficient time for dissipation of excess pore water pressures resulting from the pile driving operation. The required waiting period is generally 21

days. Tension tests are often conducted on piles which have previously been tested in axial compression. The required waiting period between tests is generally 14 days.

Data generated using a pile driving analyzer during original driving will not reflect pile set-up and may under-predict the capacity of the pile. To produce data that reflect the true capacity of the pile, the pile should be re-struck after set-up has occurred, usually a minimum of 14 days after initial driving. EM 1110-2-2906 should be consulted for further information.

3.3.5 Interpretation of the Results of a Pile Load Test

The interpretation of the test results generally involves two phases; analyzing the actual test data, and application of the final test results to the overall design of the service piles and the structure.
The following method has often been used by USACE MVN:

- Determine the load that causes a movement of 0.25 inch on the net settlement curve.
- Determine the load that corresponds to the point at which the gross settlement curve has a significant change in slope (Tangent Method).
- Determine the load that corresponds to the point on the gross settlement curve that has a slope of 0.01 inch per ton.

The average of the three loads determined in this manner would be considered the ultimate axial capacity of the pile. If one of these three procedures yields a value that differs significantly from the other two, judgment should be used before including or excluding this value from the average. A suitable FOS should be applied to the resulting axial pile capacity.

The gross settlement curve is made up of the points corresponding to the largest pile movement and the corresponding load, for each cycle. The net settlement curve is made up of the points corresponding to the maximum load per cycle vs. the movement of the pile after the removal of all loads, for each cycle. Other methods, such as the Davisson Method, have also been found to have merit.

3.3.6 Pile Group Capacity

The pile group capacity for piles in cohesionless soils is determined differently than for pile in cohesive soils.

For piles in cohesionless soils, the pile group efficiency is defined as:

$$\eta = \frac{Q_{group}}{NQ_{ult}}$$

Where:

η = the pile group efficiency
Q_{group} = the ultimate capacity of the pile group
N = the number of piles in the group
Q_{ult} = the ultimate capacity of a single pile

The ultimate group capacity of driven piles in sand is equal to or greater than the sum of the ultimate capacity of the single piles. Therefore in practice, the ultimate group capacity of driven piles in sand not underlain by a weak layer should be taken as the sum of the single pile capacities ($\eta = 1$). For piles jetted into sand, η is less than one. For piles underlain by a weak layer, the ultimate group capacity is the smaller of (a) the sum of the single pile ultimate capacities or (b) the capacity of an equivalent pier with the geometry defined by enclosing the pile group. The base strength should be that of the weak layer.

For piles in cohesive soils, the ultimate group capacity is the smaller of (a) the sum of the single pile ultimate capacities or (b) the capacity of an equivalent pier. The ultimate group capacity of piles in clay is given by the smaller of the following two equations:

$$Q_{group} = NQ_{ult}$$

Or,

$$Q_{group} = 2(B_g + L_g)Dc_a + \left[5\left(1+\frac{D}{5B_g}\right)\left(1+\frac{B_g}{5L_g}\right)\right]c_b L_g B_g$$

Where,

$$N_c = 5\left[\left(1+\frac{D}{5B_g}\right)\left(1+\frac{B_g}{5L_g}\right)\right] \le 9$$

And:

Bg = width of the pile group

Lg = length of the pile group
D = depth of the pile group
c_a = weighted average of the adhesion between the clay and the pile over the depth of pile embedment
c_b = undrained shear strength at the base of the pile group

This equation applies to a rectangular pile groups only. It should be modified for other pile group shapes.

3.4 T-WALL AND L-WALL/KICKER PILE WALL DESIGN CRITERIA

This section applies to T-walls and L-walls that serve as or impact hurricane flood protection.

3.4.1 Sampling of References

Links to electronic versions of USACE and other documents are listed in **Appendix B**, if available.

Publications:

- DIVR 1110-1-400, Soil Mechanic Data, December 1998
- EM 1110-2-1901, Seepage Analysis and Control for Dams, April 1993
- EM 1110-2-1913, Design and Construction of Levees, April 2000
- EM 1110-2-2100, Stability Analysis of Concrete Structures, December 2005
- EM 1110-2-2502, Retaining and Flood Walls, September 1989
- EM 1110-2-2504, Design of Sheet Pile Walls, March 1994
- EM 1110-2-2906, Design of Pile Foundations, January 1991
- ETL 1110-2-569, Design Guidance for Levee Underseepage, May 2005

Computer Software:

- CE Sheet Pile Wall Design/Analysis Program (CWALSHT)
- Slope Stability Program based on “MVD Method of Planes” (Method of Plane Program and plotting program is available by contracting New Orleans District.)
- Slope Stability Programs based on “Spencer’s Procedure”

Walls shall be constructed using the latest datum from Permanent Benchmarks certified by NGS as NAVD88 (2004.65). Refer to **Section 9.0** Surveys for additional information.

The following is a summary of protection heights for various wall systems. Maximum heights refer to exposed height of the protected side of the wall. The basis for these values are lessons learned from I-wall performance (stability and observed deflections), post-Hurricane Katrina forensic investigations, and numerical modeling (including the final IPET report dated June 2009), I-wall field tests along London Avenue Outfall Canal in 2007, and E-99 sheet pile wall test in 1985.

- I-walls – 4 ft maximum height
- T-walls – Typically 4 ft and greater in height
- L-walls/Kicker Pile Walls – 8 ft maximum height and no unbalanced loads

T-walls are the preferred walls where there is the potential for boat/barge impact loading or unbalanced forces resulting from a deep-seated stability analysis. L-walls may also be used where there is the potential for boat/barge impact loading; however, they shall not be used where an unbalanced force is present resulting from a deep-seated stability analysis.

Seepage, global stability, heave, settlement, and any other pertinent geotechnical analysis shall be performed in order to ensure that the overall stability of the system is designed to meet all USACE criteria. Geotechnical Engineers shall minimize the height of the wall system by designing the largest earthen section that is practical and stable for each individual project.

Floodwall protection systems are dedicated single purpose structures and shall not be dependent on or connected to other (non-Federal) structural or geotechnical features that affect their intended performance or stability. In an L-wall, the steel sheet piling is a pile acting to control seepage and provide support to the structure.

The foundation support piles shall be designed such that settlement is limited to an acceptable amount and differential settlement is negligible. Vertical movement of the cap should be less than 0.50 inch and horizontal deflection of the cap should be limited to 0.75 inch. Deviations shall be approved in advance by the USACE engineer of record. Where levees will be raised or new embankment constructed, the adverse effects of foundation consolidation must be considered which includes drag forces on both the sheet pile cut-off and support piles. In addition, these drag forces must be considered in settlement calculations.

3.4.2 Geotechnical Design Guidance

3.4.2.1 Global Stability Analysis

Stability

Spencer's Procedure shall be used for slope stability analysis incorporating FOS for two (2) Load Conditions according to **Table 3.1**.

- Condition 1 - water at SWL
- Condition 2 - water at the top of the wall

When feasible, stability berms shall be designed to counter unbalanced forces within the foundation beneath the floodwall due to unacceptable FOS. The unbalanced force is determined as the additional resistive horizontal force necessary to achieve the required

FOS. Determination of the magnitude, direction, and location of the unbalanced force is described in **Section 3.4.3** T-wall Design Procedure.

Stability Analysis Results

(Case 1) If there are no unbalanced forces, the structure is required to carry only the net at-rest loads acting above the base. These loads must be carried axially by the foundation piles below the base. Therefore, for a T-wall, the sheet piling section and tip elevation, below the base, is determined only by seepage analysis or erosion control, refer to **Section 3.4.3** T-wall Design Procedure. For an L-wall, the sheet piling section and tip elevation, below the base, is not only determined by seepage analysis or erosion control, it must also resist tension and compression forces acting in conjunction with the foundation kicker pile.

(Case 2) If there are unbalanced soil loads, refer to **Section 3.4.3** T-wall Design Procedure. L-walls are not allowed where unbalanced loads exist. For T-wall and L-wall designs, wave forces are directly transferred to the support piles through the wall stem and base slab. Therefore, wave forces are not required during slope stability analyses.

3.4.2.2 T-wall Sheet Piling Cut-off Tip Penetration

Sheet pile tip elevations shall meet criteria for seepage control and at a minimum, shall extend 10 ft beneath the T-wall base. Engineering judgment shall be used to determine the final penetration such as extending through very shallow sands or peat layers. When two T-wall sections with different ground surface, base slab and required sheet pile tip elevations are to be constructed adjacent to one another, a minimum overlap of 50 ft of the deeper required sheet pile tip elevation shall be incorporated. For relatively short reaches of floodwall with differing sheet pile requirements, such as for pump station fronting protection, the worst case required sheet pile penetration shall be used for every floodwall part of those structures.

If unbalanced forces exist, as determined by the global stability analysis, then the sheet pile tip will be determined by the anchored bulkhead analysis above. Due to the short term loading condition for HSDRRS floodwalls, it can be assumed that hot rolled sheet pile walls will be 100% effective against seepage pressures, although some leakage through the sheet pile interlocks may still occur. The design has discretion to assume reduced efficiency during long term loading events when applicable.

3.4.2.3 L-wall Sheet Piling Tip Penetration

Sheet pile tip elevations shall meet criteria for seepage control and at a minimum, shall have either a 3 to 1 penetration ratio of wall height to depth or shall extend 10 ft beneath the L-wall base, whichever is greater. Sheet pile tip elevation shall provide required compression and tension resistance required from T-wall analysis (see below). Engineering judgment shall be used to determine the final penetration such as extending through very shallow sand or peat layers.

The ultimate tension and compression capacity of the sheet pile shall be the allowable shaft resistance on both sides of the sheet using the projected flange line, except in the upper 10 ft below the slab. In this top 10 ft, only the protected side of the sheet pile shall be considered effective. A FOS of 3.5 shall be applied to the ultimate capacity to arrive at the allowable capacity due to reduction inherent when installing sheet piling with vibratory hammers. A FOS of 2.5 may be used in both compression and tension when a pile load tests is performed.

3.4.2.4 T-wall and L-wall Pile Foundation Tip Penetration

This section applies to Precast Prestressed Concrete (PPC), Steel H and Pipe sections.
Pile lengths will be based on subsurface investigation data from existing contracts or, if time permits, new borings. If data is available from historic pile tests, they can be used to determine pile lengths. The designer would need to determine if the historic data is appropriate based on size, type, length, and soil parameters. If those previous test piles were not tested to failure, this would have to be considered when determining the value of the data. For axial loads in tension and compression, the ultimate capacity should be based on the following FOS:

FOS = 2.0 with static pile test data
FOS = 2.5 with pile dynamic analysis (PDA)
FOS = 3.0 without pile test data.

(See table in Structural Design Analysis section for additional FOS.)

3.4.2.5 Piping and Seepage Analysis

Piping (Cutoff-wall Tip Elevation)

T-walls and L-walls must be designed for piping erosion along the base of the pile founded wall. Analysis shall be based on water to the top of the wall. This analysis can be performed by various methods such as Lane's weighted creep ratio, flow nets, Harr's method of fragments, or finite element methods. A design procedure used for evaluating piping erosion for clays, silts, and sands directly beneath pile-founded L-walls and T-walls for hurricane protection is to use Lane's weighted creep ratio for a seepage path along the sheet pile wall. Engineering judgment should be exercised in selecting appropriate weighted creep ratio values for this analysis and using the weighted creep length based on flow path through the different foundation materials.

Seepage

Seepage analysis through the foundation should be checked in accordance with the applicable portions of EM 1110-2-1901, DIVR 1110-1-400, EM 1110-2-1913, and ETL 1110-2-569. For computing the seepage gradient FOS see **Section 3.1.3** Seepage Analysis.

3.4.2.6 Heave Analysis

If applicable, heave analysis should be checked. Safety factor for total weight analysis is 1.2. For computing heave FOS refer to **Section 3.2.1.4** Heave Analysis.

3.4.3 T-wall Design Procedure

The design procedure is applicable to T-walls. Adaptations for drainage structures, floodgates, and extended foundations are discussed in **Section 3.4.3.3**. Fronting walls, constructed separate from existing structures (i.e. Pump Stations) present other analysis concerns that are discussed in **Section 3.4.3.4**. Other special exceptions, such as wall alignment changes, 90 degree intersections of walls, etc, are not addressed in this document and are treated on a case-by-case basis involving coordination between the project designer and TFH.

3.4.3.1 Description

This design method was developed to incorporate complete loading on T-walls including part of the lateral earth load imposed on pile foundations due to a storm surge acting on the flood side ground surface (termed the unbalanced force). This design procedure is a supplement to existing HSDRRS design criteria and EM 1110-2-2906, which shall govern for design aspects not specifically stated herein.

This design method evaluates the improvement in global stability by including the allowable shear and axial force contributions from the foundation piles together with the soil shear resistance in a limit equilibrium slope stability analysis (Spencer's Method). This procedure has the ability to account for both the reinforcing effect the piles have on the foundation soils and ability to determine safe allowable shear and axial forces for the piles. This design procedure is a supplement to existing Hurricane and Storm Damage Risk Reduction System design criteria and EM 1110-2-2906, which shall govern for design aspects not specifically stated herein. The design procedure requires an initial pile layout to get started. The initial pile layout is designed similarly to the current MVN procedure in that slope stability is checked for the T-wall configuration neglecting piles and the water loads directly on the wall. A balancing force is computed to achieve the required global factor of safety (termed the unbalanced force). A portion of the unbalanced force is applied to the pile cap and a CPGA analysis is completed. The initial CPGA based design is verified by applying the unbalanced force as an equivalent "Distributed Load" to the foundation piles in an Ensoft Group Version 7.0 model (Group 7). Refer to Chapter 5 for detailed discussion of these programs. Loads are also applied to the wall base and stem and the axial and shear responses for each pile are then compared with the allowable pile forces found from load tests or from computations. Limiting axial and lateral loads according to load test data helps minimize deflection to tolerable limits. Deflections of the T-wall computed from the Group 7 analysis are also compared to allowable deflections and bending moments and shear are checked to verify that they are within allowable pile limits. Note that all CPGA designs shall include unfactored service loads and the Group 7 input shall include unfactored soil properties.

The initial CPGA based design is verified by applying the unbalanced force as an equivalent uniformly “Distributed Load” to the foundation piles in an Ensoft Group Version 7.0 model (Group 7). A minimum 50-100% of the unbalanced load is applied to the flood side row of piles as discussed in the design steps. Loads are also applied to the wall base and stem, the axial, and shear and bending moment responses (including combined axial and bending stresses) for each pile are then compared with the allowable pile forces found from load tests or from computations. Limiting axial loads according to load test data helps minimize deflection to tolerable limits. Deflections of the T-wall computed from the Group 7 analysis are also compared to allowable deflections and combined axial, bending stresses, and shear are checked to verify that they are within allowable pile limits from EM 1110-2-2906. For a detailed discussion of how the equivalent distributed loads are applied, refer to **Section 3.4.3.3** of this document. Note that all CPGA designs and the Group 7 input shall include unfactored service loads and un-factored soil properties.

CPGA: The Pile Group Analysis computer program CPGA is a stiffness method analysis of three-dimensional pile groups assuming linear elastic pile-soil interaction and a rigid pile cap. It is intended to be a simple program for pile group analysis to eliminate many of the inaccuracies inherent in hand analysis methods. Soil resistance to pile movement may be included. The details of this program are described in Technical Report ITL-89-3 "User's Guide: Pile Group Analysis (CPGA) Computer Group (July 1989). Additional information on the CPGA program can be found in the USACE Engineer Manual EM 1110-2-2906 Design of Pile Foundations.

Group 7: The Ensoft Group Version 7.0 Model (Group 7) is a proprietary program developed by Ensoft, Inc. A summary of this program is described on the Ensoft, Inc. website (http://ensoftinc.com/) as follows:

> The (Group 7) program was developed to compute the distribution of loads (vertical, lateral, and overturning moment in up to three orthogonal axes) from the pile cap to piles arranged in a group. The piles may be installed vertically or on a batter and their heads may be fixed, pinned, or elastically restrained by the pile cap. The pile cap may settle, translate, and/or rotate and is assumed to act as a rigid body. The program will generate internally the nonlinear response of the soil, in the form of t-z and q-w curves for axial loading, in the form of p-y curves for lateral loading and in the form of t-r curves for torsional loading. A solution requires iteration to accommodate the nonlinear response of each pile in the group model.
>
> Program GROUP solves the nonlinear response of each pile under combined loadings and assures compatibility of geometry and equilibrium of forces between the applied external loads and the reactions of each pile head. The p-y, t-z, q-w and t-r curves may be generated internally, employing recommendations in technical literature, or may be entered manually by the user. The pile-head forces and movements are introduced into equations that yield the behavior of the pile group in a global coordinate system. The program can internally compute the

deflection, bending moment, shear, and soil resistance as a function of depth for each pile.

Additional information regarding this software can be obtained on the Ensoft, Inc. website (http://ensoftinc.com/). Other Programs: The USACE recognizes that other programs may be suitable for the analysis. The designer should either use the referenced programs for the analysis or provide MVN with a request to use a different program/method with all supporting information for review and approval prior to proceeding with the design effort. **Refer toChapter 5 for detailed discussion of these programs.**

Step 1. Initial Slope Stability Analysis

1.1. Determine the critical **non-circular failure** surface from a slope stability analysis for loading to the SWL and to the Top of Wall using a software program capable of performing Spencer's method with a robust search procedure (hereinafter termed Spencer's method). Sufficient deterministic and finite element analyses have been completed on varying soil profiles to assure that the non-circular surfaces shall govern the stability assessment. Furthermore, numerical modeling has indicated that soil displacement is nearly horizontally along the critical failure surface. The slope stability analysis should be performed with only water loads acting on the ground surface flood side of the heel of the T-wall because these are the loads that the foundation must resist to prevent a global stability failure. The analysis should not include any of the water, soil, or surcharge loads acting directly on the structure because these loads are presumed to be carried by the piles to deeper soil layers.

Global stability of T-walls includes the foundation materials on the protected side of the wall. If those materials were removed the walls would be required to support a larger unbalanced load. If the foundation on the protected side of the T-wall (like an existing slope towards an inland ditch or canal) is not stable or does not satisfy required factors of safety it must either be improved to meet criteria or be partly removed from the global stability model when calculating the unbalanced load. Landward berms and channel local slope stability analysis shall satisfy the applicable FOS listed in this chapter in order to be included in the global stability analysis.

1.2. If the factor of safety of the critical failure surface is greater than required (see **Section 3.1.1.2**), a structural analysis of the T-wall system shall be completed using a group pile analysis program (like CPGA or Group 7) using only the water loads and at rest pressures applied directly to the structure. If the lowest factor of safety is less than required, then proceed to Step 2. The factor of safety and defining failure surface coordinates should be noted for use in Step 2.

1.3. As stated in Step 1.1 above, only non-circular failure planes shall be investigated and shall be horizontal along the critical failure surface. This horizontal distance is referred to as the neutral block. **The neutral block shall have a minimum dimension of the greater of 0.7 H or the base length of the T-Wall or structure. H is defined as the**

vertical distance from the failure surface to the intersection of the failure plane with the ground surface (see Figure 3.7).

1.4. Designers shall also perform a Method of Planes (MOP) analysis as a design check. This is required regardless if an unbalanced load exists or not. The MOP Factors of Safety are 1.3 for water at the Still Water Level (SWL) and 1.2 for water at Top of Wall (TOW). MOP results (including final factors of safety, failure surface geometries, and any unbalanced loads) shall be compared to the Spencer's analysis that utilize a FOS of 1.5 with Water at SWL and 1.4 with Water at TOW. The Spencer's method remains the design tool.

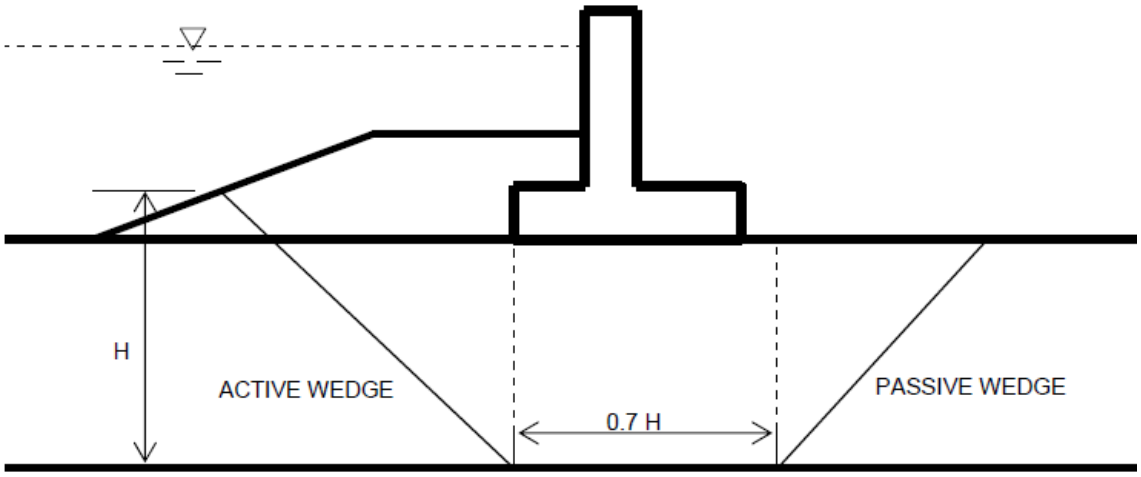

Figure 3.7 Typical Failure Plane Beneath a T-Wall

3.4.3.2 Sector Gate and Drainage Structure Foundation Analysis

Pile foundations for sector gate and drainage structure monoliths are checked for stability using the same procedure as T-walls, except that limitations are made on the number of piles included in resisting the unbalanced load. The minimum neutral block dimensions described in Step 1.1 are applicable, and this includes the full width of the base. The number of piles dedicated to resist the unbalanced load is limited to only those required to satisfy the flow-through as calculated in Step 4.5.

3.4.3.3 Fronting T-walls with Trailing Structures

Until further analysis proves otherwise, the unbalanced load shall be conservatively resisted by only the fronting wall. Therefore, global stability will be based on the fronting wall. The neutral wedge minimum, specified in Step 1.1 as the greater of 0.7 H or the base width, shall be based on the fronting wall only. It is assumed that a failure plane would penetrate the trailing structure regardless of the structure net downward force and base shear strength capacity. The procedure for T-walls shall be fully applied to the fronting wall w/o considering the trailing structure. The benefit to this approach is that the fronting wall stabilizes the soil under the trailing structure so there is no loss in pile

capacity for the trailing structure. This is significant when considering that many of the existing trailing structures are built on timber piles with minimal capacity. Note that the protected side tail water, where applicable such as the intake basin of a pump station, imposes a dead load. This dead load is relieved by the pile foundation and is not included in the Central Block Resistance for cohesive soils (Rb in MOP analysis). However, the tail water head creates a downward pressure that should be included in passive driving resistance (Dp in MOP analysis). In Spencer based analyses, the protected side water loads are applied to the ground surface but not to the protected structure. One solution to reduce any unbalanced load with sequential structures is to locate the fronting wall further from the pump station such that a stability berm can be built between the two.

Step 2. Unbalanced Force Computation

2.1. Determine the unbalanced forces for both loading to Still Water Level (SWL) and Top of Wall (TOW) required to achieve the target factor of safety using Spencer's method with a non-circular failure surface search. The unbalanced force shall be applied as a horizontal line load at a location having an X-coordinate at the heel of the wall or simply beneath the base of the wall. The Y-coordinate shall be located at an elevation that is half-way between the ground surface at the heel of the wall and the lowest elevation of the critical failure surface beneath the wall base from Step 1.

The unbalanced load is arrived at through a trial and error process where the load is varied until the desired factor of safety is achieved. The failure surface found in Step 1 is "reanalyzed" with the specified line load so that the largest unbalanced force is computed. The unbalanced load is determined for both conditions: the slip surface with lowest factor of safety and the slip surface with the highest unbalanced load. The unbalanced load and the defining failure surface coordinates should be noted for use in subsequent steps. The largest unbalanced load does not necessarily coincide with the failure surface with the lowest factor of safety; therefore, multiple failure surfaces at various elevations must be analyzed to determine those corresponding unbalanced forces. The unbalanced load is determined for both conditions: the slip surface with lowest factor of safety and the slip surface with the highest unbalanced load. The unbalanced load and the defining failure surface coordinates should be noted for use in subsequent steps.

2.2. The critical failure plane is defined as the failure surface that produces the greatest unbalanced load. This failure surface is NOT necessarily the failure surface with the lowest factor of safety. Where unbalanced loads are present, all axial pile capacity developed above the critical failure plane shall be disregarded.

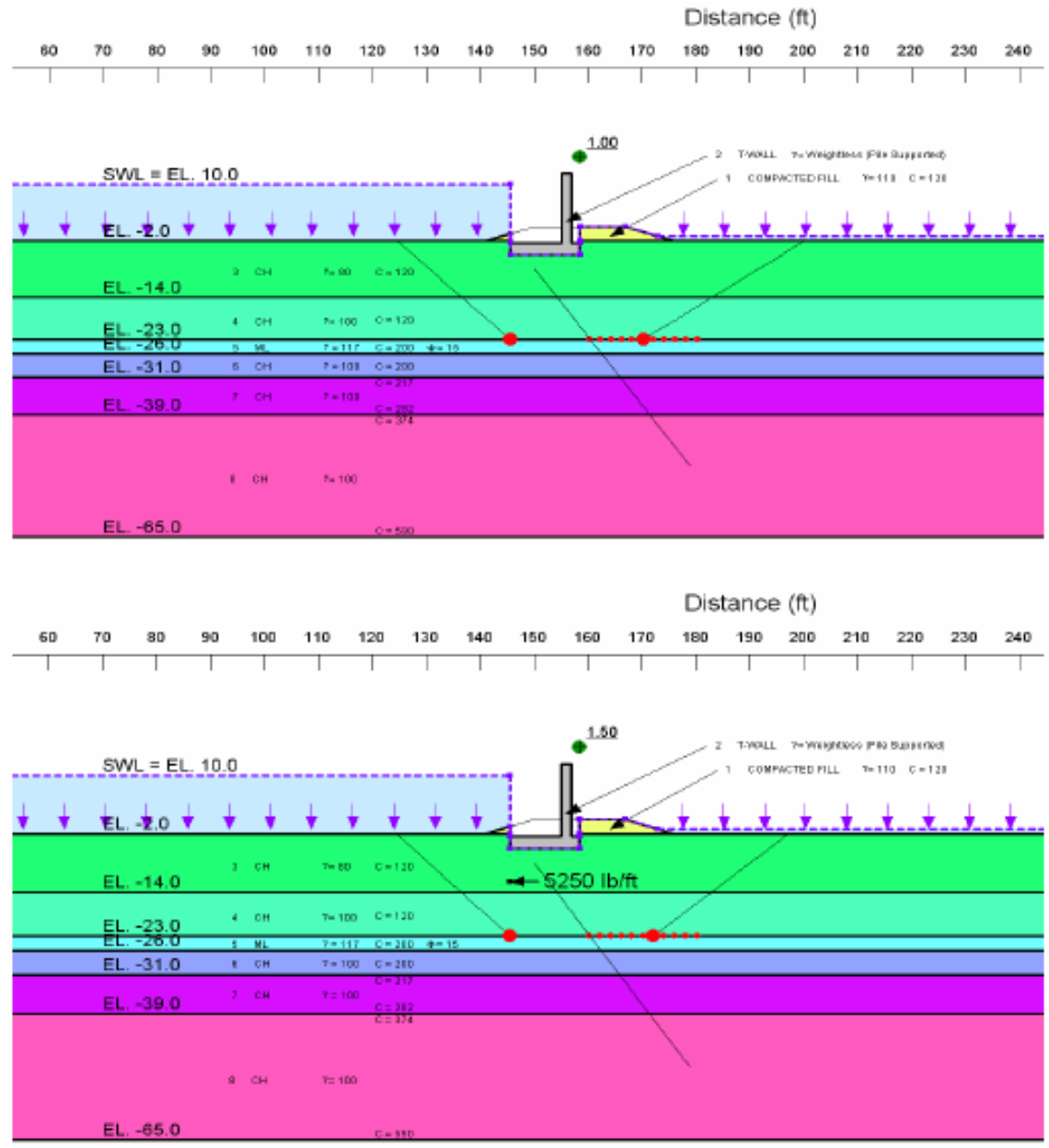

Figure 3.8 Determination of Unbalanced Load

3.4.3.4 Design Examples

Step 3. Allowable Pile Capacity Analyses

3.1. Establish allowable single pile axial (tension; compression) capacities. Axial capacity shall be determined according to chapter 3 of the HSDRRSDG. Axial capacities must be determined for tensile and compressive piles. The contribution of skin friction should not be accounted for above the critical failure surface found in Step 2 in the

determination of the axial capacity. Allowable axial loads may also be found using data from pile load tests and applying appropriate factors of safety after the ultimate load has been reduced to neglect the skin friction effects capacity above the critical failure surface. Much like the skin friction along a pile is less during driving than it is after it sets up for multiple weeks, an unstable foundation (from slope stability) can adversely affect the bond between the soil and the piles. Therefore, the skin friction in the foundation above the critical failure surface should not be considered. When pile load tests are performed for these piles, this has typically been taken into account by utilizing casings (auguring out the soil). In addition tension pile test at the critical failure surface can be conducted or theoretical can be calculations made to determine how much skin friction capacity should be removed from a pile test with no casing. No cyclic reductions need to be applied to the capacities.

3.2. Compute allowable shear loads on the pile at the critical failure surface. Lateral shear loads have historically not been computed; instead deflections are calculated at a working stress level and are required to be less than specified limits. For this procedure, in addition to the traditional check of pile cap displacements, allowable lateral loads are now used as a design check. The Ensoft program LPILE or the Corps program COM624G can be used to compute allowable lateral shear in the pile using these steps:

a. Analyze the pile with a free head at the critical failure surface. To account for overburden pressure, make the top foot a layer with a unit weight equal to the effective stress due to the overburden.
b. Run a series of progressively higher lateral loads on the pile, with moment equal to zero, and plot load vs. deflection results. The pile will fail when deflections increase greatly with increasing load. The load vs. deflection curve should be terminated at the load at which yield in the pile is reached. Draw lines roughly tangent to the initial and final portions of the curve. The point of intersection of the two tangent lines is the ultimate shear strength. An example of this is shown in **Figure 3.9**.
c. Divide the shear load by the same factors of safety used to compute allowable axial capacity from calculated ultimate values.

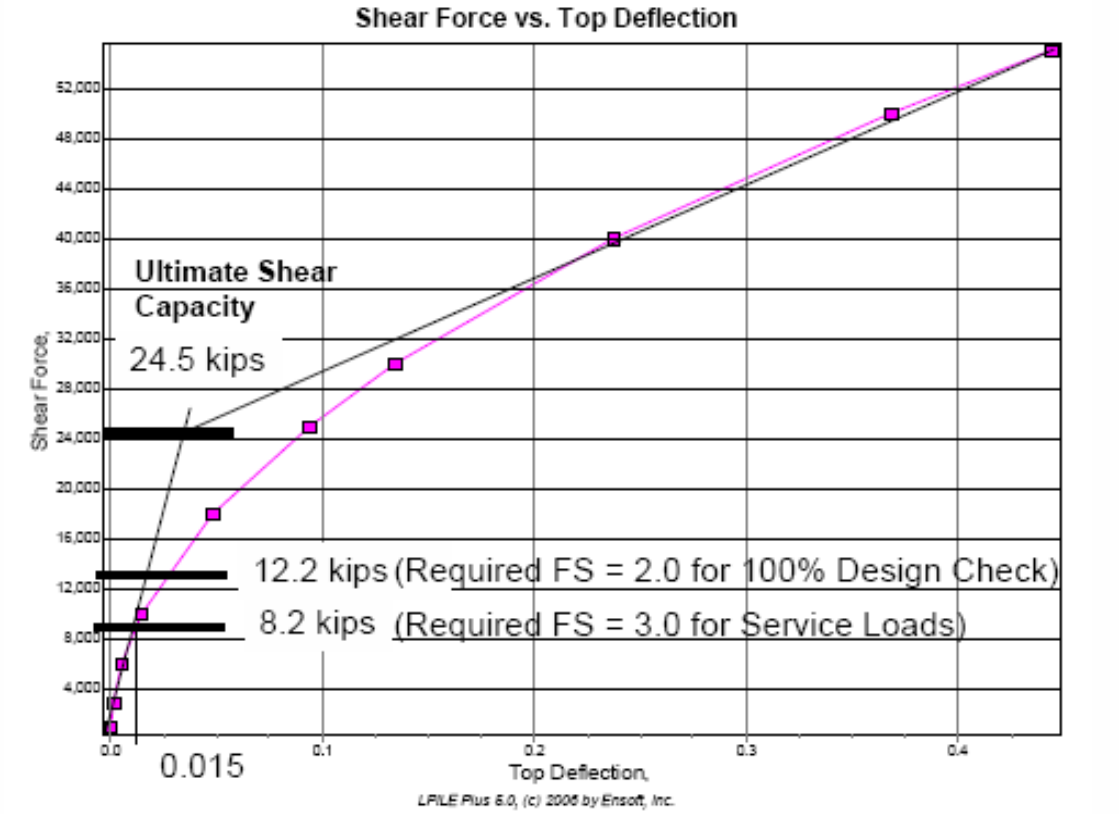

Figure 3.9 Example of computation of ultimate shear load in the pile from a load vs. deflection curve developed using LPILE. FOS varies depending on load case.

3.3. Determination of the Modulus of Horizontal Subgrade Reaction (E_s).

For cohesive soils or soils with a constant modulus of horizontal subgrade reaction:

$$E_s = 0.2222 q_u CD$$

For cohesionless soils or soils with a linearly increasing modulus of horizontal subgrade reaction:

$$E_s = N_H ZCD$$

Where:

q_u is the unconfined compressive strength in units of pounds per square foot
B is the pile width in units of inches, measured at right angles to the direction of displacement
C is a reduction factor for cyclic loading effects
D is a reduction factor for the effect of group action
N_H is constant of horizontal subgrade reaction in units of pounds per cubic inch (may be found in text books)
Z is the depth below the equivalent ground surface in units of inches

Es is in units of pounds per square inch

Examples of this step-by-step design procedure for T-walls are provided in **Appendix E**.

Step 4. Initial T-wall and Pile Design

4.1. Use CPGA to analyze all load cases and perform a preliminary pile and T-wall design comparing computed pile loads to the allowable values found in the preceding step. For this analysis the unbalanced force is converted to an "equivalent" force applied to the bottom of the T-wall. It is calculated by a ratio derived by computing equivalent moments at the location of the maximum moment in the pile below the critical failure surface. The location of maximum moment is approximated from Figure 6.9 of **Pile Foundations in Engineering Practice** by Shamsher Prakash and Hari D. Sharma as being about equal to the stiffness factor, R, below the ground surface. The equivalent force (excluding the unbalanced force above the base of the T-Wall), Fcap, is calculated as shown below (see **Figure 3.10**):

$$F_{cap} = F_{ub}\left[\frac{\left(\frac{Lp}{2}+R\right)}{(Lp+R)}\right]\frac{Lp}{Lu} \qquad (1)$$

Where:

Fub = unbalanced force computed in Step 2.
Lu = distance from top of ground to the lowest El. of critical failure surface (in)
Lp = distance from bottom of footing to lowest el. of crit. failure surface (in)

$$R = (EI/E_s)^{1/4} \qquad (2)$$

E = Modulus of Elasticity of Pile (lb/in2)
I = Moment of Inertia of Pile (in4)
E_S = Modulus of Subgrade Reaction (lb/in2) below critical failure surface. E_S is calculated as shown in Step 3.

Comments:

a. The above procedure does not directly account for the unbalanced force that's transferred down the pile and into the soil below the critical failure surface by lateral soil resistance. This procedure has been found to be adequate for computing axial loads in the piles in order to determine a preliminary pile layout. Forces not accounted for with this procedure will be computed directly in Step 5.

b. The lowest elevation of the critical failure surface is used, regardless of where the computed failure surface actually intersects the piles. This simplification is made because the soil-structure modeled with this procedure is an approximation and research shows that the presence of the piles will influence the actual location of the critical failure surface so it is something like that shown in **Figure 3.10**. This procedure is considered to provide acceptable design forces in the piles.

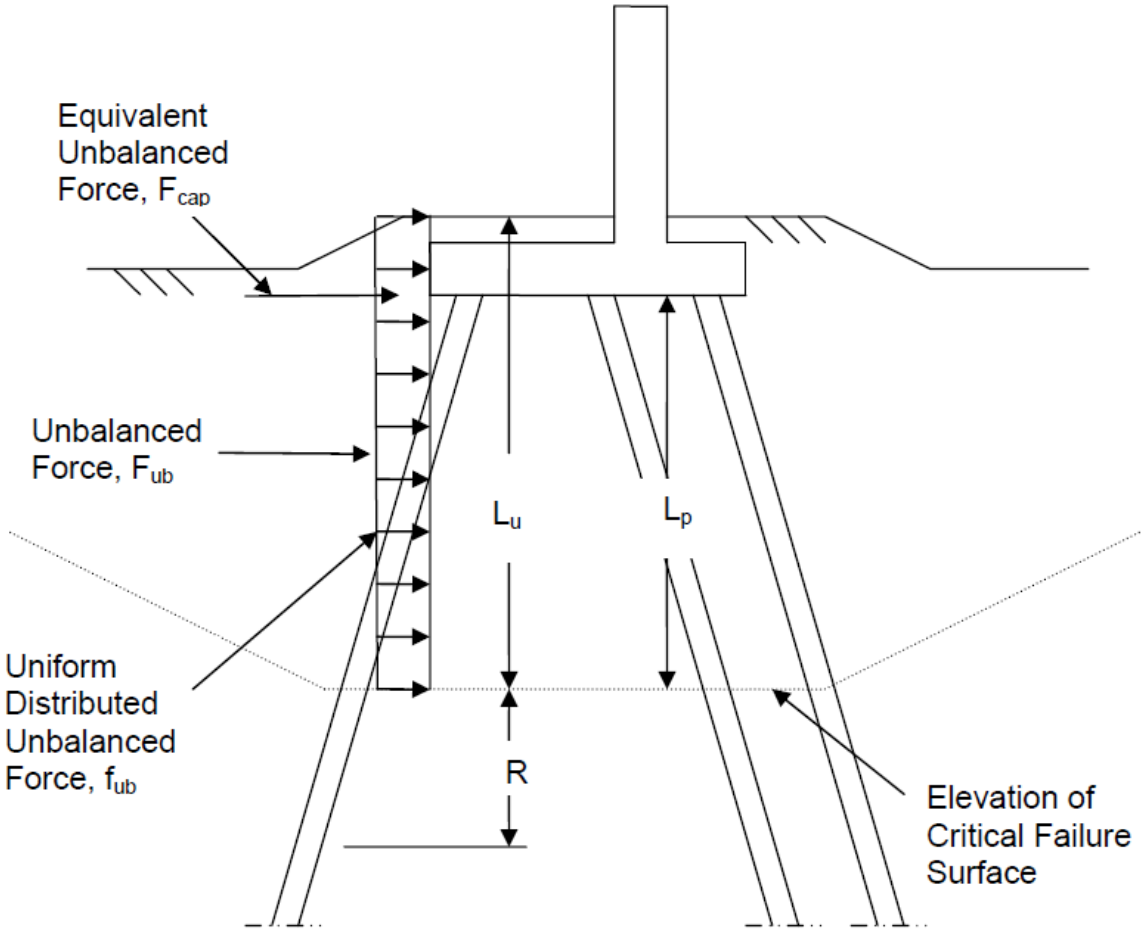

Figure 3.10 Unbalanced Forces.

4.2. In CPGA, the top of soil will be modeled at the ground surface, and the subgrade modulus, Es, is reduced with reduced global stability factors of safety to account for lack of support from the less stable soil mass located above the critical failure plane. For cases where the global factor of safety without piles is less than 1.0, Es is input at an R extremely low value, such as 0.00001 ksi (CPGA will not run with Es set at 0.0). For conditions where the factor of safety is between 1.0 and the target factor of safety, Es is computed by multiplying the percentage of the computed factor of safety between 1.0 and the target factor of safety by the actual estimated value of Es. For example, if the FS = 1.0, Es is input as 0.00001. If the FS = 1.2, the target factor of safety is 1.5, and the estimated value of Es below the foundation is 100 psi, Es is input at 40% of the actual estimated value, 40 psi. This accounts for the fact that with higher factors of safety the unbalanced force is a small percentage of the total force, and the soil is able to resist some amount of the lateral forces from the wall. Although Es is reduced, the full pile length is considered braced provided the FOS is above 1.0 or the sheet piling is extended

as stated in Step 4.4 below. One reduced value of Es is used throughout the depth of the pile. There is no distinction in values between the leading and trailing rows.

For certain cases with shallow critical failure surfaces, the procedure in the previous paragraph may not match well with the Group results found in later steps. For these cases, the CPGA model may be created with the ground level set at the level of the critical failure surface and the T-wall suspended above it at the actual footing elevation. The soil modulus at the critical failure surface is used for this model. There is no reliable method to account for factors of safety greater than 1.0 with this method however.

4.3. No reductions to the subgrade modulus are required for cyclic loading. Group reductions based on pile spacing are also applicable. However, for monoliths containing battered piles, further refinement of the Es value for Step 4 calculations may not be required for several reasons:

- The horizontal component of Battered Piles provides most of the lateral resistance.
- The Es reduction used in the Step 4.2 conservatively uses the same reduced Es for trailing rows as leading rows.
- The governing load cases will be more accurately analyzed in Step 5.

When used, Group reduction factors (Rg) to be applied to subgrade modulus shall be computed as shown below:

Subgrade Modulus reductions are computed as follows:

For loading perpendicular to the loading direction:

$Rga = 0.64(s_a/b)^{0.34}$ *; or = 1.0 for* $s_a/b > 3.75$

Where:
s_a = spacing between piles perpendicular to the direction of loading (parallel to the wall face). Normally piles should be spaced no closer than 5 feet on center.
b = pile diameter or width

For loading parallel to the loading direction:

For leading (flood side) piles:

$Rg_{bl} = 0.7(s_b/b)^{0.26}$ *; or = 1.0 for* $s_b/b > 4.0$

For trailing piles, the reduction factor, Rg_{bt} is:

$Rg_{bt} = 0.48(s_b/b)^{0.38}$ *; or = 1.0 for* $s_b/b > 7.0$

Where:

s_b = spacing between piles parallel to the direction of loading (perpendicular to the wall face. Note: s*b* can be measured 5 pile diameters below the bottom of the cap, making pile rows trailing others battered in the opposite direction to normally be able to be considered as leading piles.
b = pile diameter or width

4.4. Sheet piling shall be included and designed to control seepage. Sheet pile shall be designed for seepage in accordance with **Section 3.4.2**. When unbalanced loads exist, cutoff sheet piling shall be extended 5 feet below the critical failure plane determined in Step 2. The sheet piling shall be a PZ-22 section or equivalent, structural analysis is not required. The sheet piling curtain wall provides the added benefit of confining the soil wedge such that the pile shall be considered braced full length about both axis regardless of the stability factor of safety.

4.5 This paragraph addresses the resistance to soil flow of the failure wedge through the pile foundation. Storm surge loading on the soil beyond the relieving base width of the T-wall superstructure results in a passive loading on the foundation piles where the soil tends to push through the piles rather than an active loading where the piles tend to push through the soil. The foundation piles need to be checked for resistance to flow through, which is a function of pile spacing, magnitude of load and soil shear strength, and number of pile rows. Pile spacing perpendicular to the load should generally be limited to no more than seven times the pile diameter. To resist flow-through, the passive load capacity of the piles (Pall) is checked against the unbalanced loading. In addition, this check will define the upper limit of possible loading on the flood side row of piles and may lead to redistribution of the unbalanced load for later Group 7 analysis. The procedure for performing this check is set up to evaluate this per monolith or by pile spacing (for uniformly spaced piles) as follows:

a. Compute capacity of the flood side pile row using a basic lateral capacity:

$$\sum P_{all} \frac{n \sum P_{ult}}{1.5} \qquad (3)$$

Where:

n = number of piles in the row perpendicular to the unbalanced load within a monolith. Or, for monoliths with

$\sum P_{ult}$ = summation of P_{ult} over the height L_p, as defined in Step 4.1
For single layer soil is P_{ult} multiplied by L_p
For layered soils, P_{ult} for each layer is multiplied by the thickness of the layer and added over the height L_p

P_{ult} = *Rf(9Sub)*

S_u = soil shear strength
When there are multiple soil strata between the base of the structure and the ritical failure plane being analyzed, Su shall be calculated as the weighted average of Su of each stratum above that failure plane.
B = pile width
Rf = group reduction factor for pile spacing parallel to the load are as follows:

For leading (flood side) piles:

$Rf = 0.7(s/b)^{0.26}$; or = 1.0 for s/b > 4.0

For trailing piles, the reduction factor, Rf, is:

$Rf = 0.48(s/b)^{0.38}$; or = 1.0 for s/b > 7.0

Where:
s = spacing between piles parallel to the loading

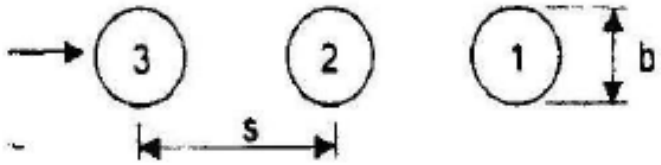

Figure 3.11Spacing Between Piles

No reduction is considered for the pile spacing perpendicular to the load. Group effects do not need to be considered between pile rows battered in opposite directions (battered away from each other). A trailing row staggered from a leading row may be treated as a leading row, but additional rows should be treated as trailing. The spacing between lead pile and the staggered pile (row spacing), in the direction of the load, shall be equal to or less than the column spacing of the leading piles.

b. Compute the unbalanced unit load on the piles (F_p) to check against ΣP_{all}:

$$F = w f_{ub} L_p \quad (7)$$

w = Monolith width. Or, for monoliths with uniformly spaced pile rows, w = the pile spacing perpendicular to the unbalanced force (s_t).

$$f_{ub} = \frac{F_{ub}}{L_u} \quad (8)$$

Fub = Net unbalanced force per foot from Step 4.1
Lu and *Lp* as defined in Step 4.1

If layered soils exist, this check can be made by summing Pall over the length of the pile from the bottom of the wall to the lowest elevation of the critical failure surface (L_p, fig. 2) (i.e., $\sum P_{all}$) and comparing it to fub multiplied by L_p.

c. The number of piles is adequate to resist flow-through if ΣP_{all} for the flood side piles exceeds $F_p/2$. If Fp/2 exceeds ΣPall for the flood side piles, then compute ΣP_{all} for all rows of piles. If ΣP_{all} is less than F_p, then the pile foundation will need to be modified (decreasing transverse pile spacing and/or increasing pile rows) until this condition is met.

The flow is resisted by the full ΣPall of the floodside row and the balance distributed to all piles behind the flood side row as modified by Rf for trailing piles. Irregular pile layouts with rows that have far fewer piles than other rows should not have increased load on the pile to account for greater lateral spacing.

4.6. For an additional flow-though mechanism check, compute the ability of the soil to resist shear failure between the pile rows from the unbalanced force below the base of the T-wall, $f_{ub}L_p$, using the following equation:

$$f_{ub}L_b \leq \frac{A_p S_u}{FS}\left[\frac{2}{(s_1 - b)}\right] \qquad (9)$$

Where:

A_pS_u = The area bounded by the bottom of the T-wall base, the critical failure surface, the upstream pile row and the downstream pile row multiplied by the shear strength of the soil within that area. For layered soils, the product of the area and Su for each layer is computed and added for a total ApSu. See **Figure 3.12**.

FS = Target factor of safety used in Steps 1 and 2.
s_t = the spacing of the piles transverse (perpendicular) to the unbalanced force
b = pile width

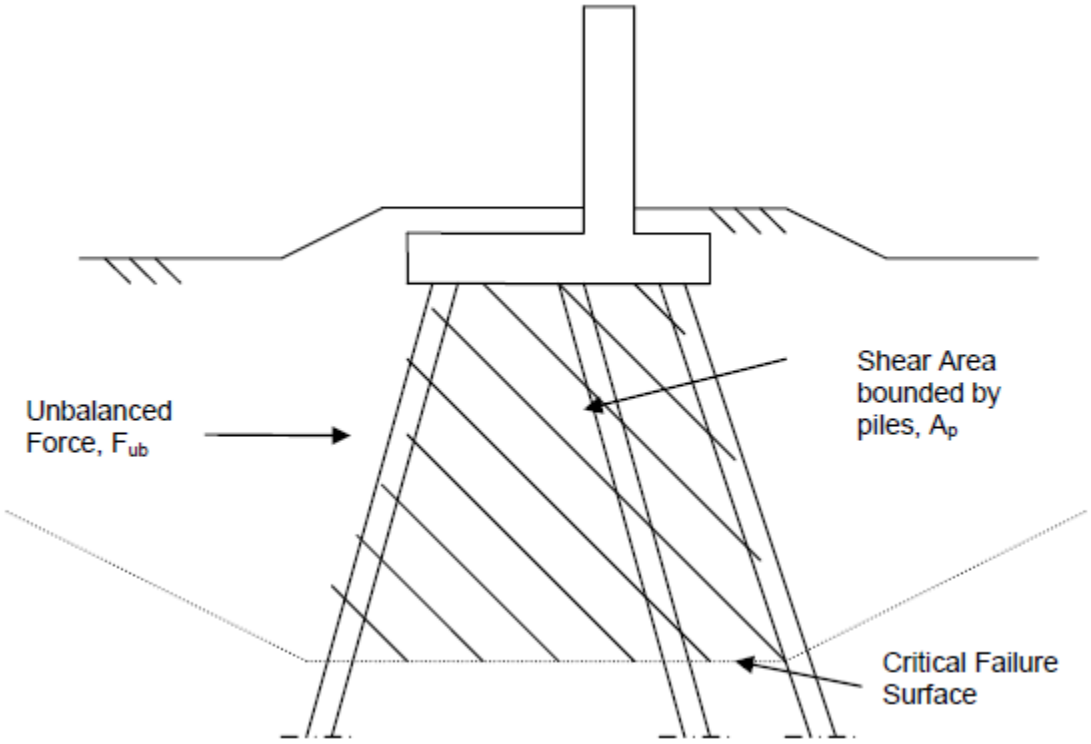

Figure 3.12 Area for soil flow-through shear check.

Note: The sheet pile is conservatively neglected for this computation.

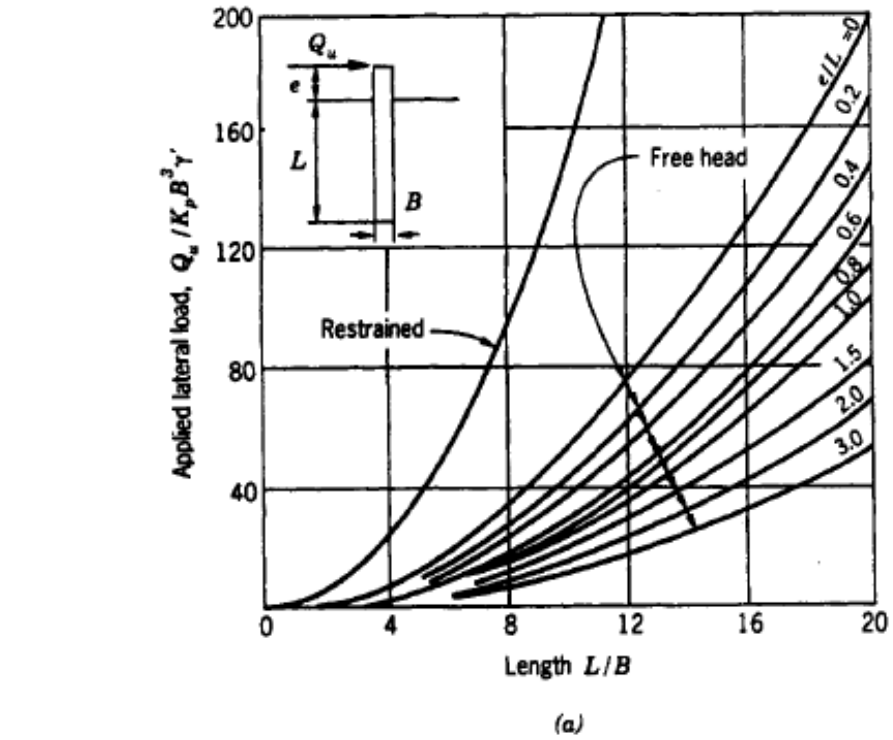

(a)

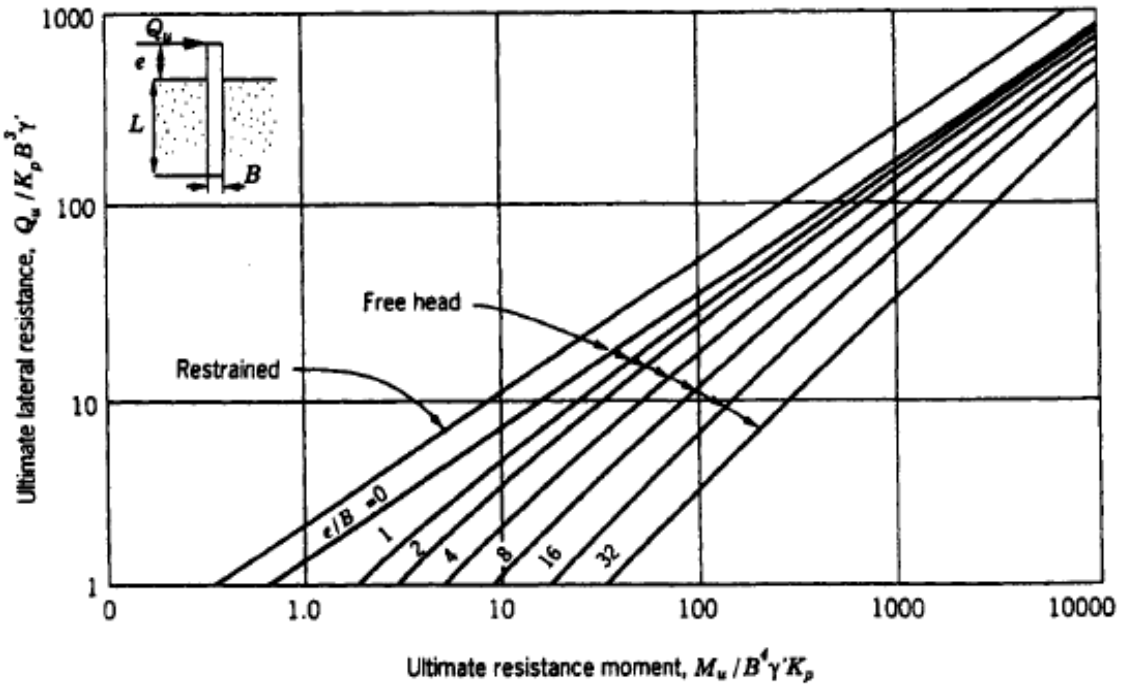

(b)

Figure 3.13 Ultimate Lateral Load Capacity of Short and Long Piles in Cohesionless Soils (Broms, 1964). (a) Ultimate lateral resistance of *short piles in cohesionless* soil related to embedded length, (b) ultimate lateral resistance *of long piles in cohesionless* soil related to ultimate resistance moment.

Step 5. Pile Group Analysis (all loads)

5.1. To verify the preliminary CPGA design, Group 7 (Ensoft Group Version 7.0) is used to check pile loads and stresses. All loads, including the unbalanced loading, are applied to the pile foundation. Only load cases controlling deflections and pile loads in Step 4 need to be checked. It is expected that the critical load cases checked will include the unbalanced force found for loading at the SWL and the Top of Wall.

5.2. Water pressures, at rest soil pressures, concrete weight, vessel impact, etc. are applied directly to the structure. The unbalanced load is applied as uniformly distributed along the length of the bearing piles located above the critical failure plane.

5.3. For the pile group analysis, develop a Group 7 model that incorporates the water and soil loads applied directly to the wall base and stem and also include the computed unbalanced force as distributed loads acting on the piles. At this point, the pile foundation has also been adjusted as needed to resist soil flow through as required in Steps 4.5 and 4.6. The total distributed load on the piles (Fp) was defined in Step 4.5. Distribution of unbalanced loading onto the rows of piles is as follows:

- If the total ultimate capacity ($n\Sigma P_{ult}$) of the flood side pile row is greater than 50% F_p, then 50% of F_p is applied to the flood side row of piles as a uniform load Critical Failure Surface Unbalanced Force, F_{ub} Shear Area bounded by piles, A_p along each pile equal to $0.5f_{ub}s_t$ (variables are defined in Step 4.5), and the remaining 50% of F_p is divided evenly among the remaining piles.

- If the total ultimate capacity ($n\Sigma_{Pult}$) of the flood side piles is less than 50% of F_p, then the distributed load on each pile of the flood side row is set equal to P_{ult} and the remaining amount of F_p is distributed onto the remaining piles according to the relative group reduction factors (Rf). Rf values are determined in accordance with Step 4.5 above.

The distribution of load to the piles has a degree of uncertainty. To assure that the piles are not structurally overstressed from combined axial and bending stresses, as well as shear stress, the Group analysis shall also be performed with 100% $f_{ub}L_p$ applied to the lead pile, but no more than Σ_{Pult} as described previously. Pile allowables shall be increased by a 50% overstress factor. The shear strength in the soil shall also be checked, the allowable shear capacity of the soil shall be the ultimate divided by a FOS = 2.0 (see Step 3.2; in Fig 3.5 the allowable load is 12.2 kips).

5.4. The Group analysis will yield the response of the piles to all the loads applied to the T-wall system. The Group 7 program will automatically generate the p-y curves for each soil layer in the foundation based on the strength and the soil type. Once the Group 7 run is completed, the pile shear and axial force responses are determined from the output file. These forces must be determined from the piles local coordinate system. The pile group reduction factors shown previously in Step 4.4 are the same as used by the Group 7 program, so the program can be left to compute them automatically.

5.5. This analysis can be made using partial p-y springs to support the piles in the volume of the critical failure mass similar to reductions for the CPGA method found in step 4.2. The partial p-y curves are interpolated on the basis of the unreinforced factor of safety determined in Step 2. If the unreinforced safety factor is less than or equal to 1 then the p-y curves inside the failure circle are zeroed out so that the soil in the failure mass offers no resistance to pile movement. If the unreinforced factor of safety is between 1 and 1.5the target factor of safety the p-y springs are partially activated based on the percentage that the unreinforced safety factor is between 1 and 1.5 the target factor of safety. Thus, if the unreinforced factor of safety is 1.25 and the target is 1.5, the p-y springs are 50% activated. Fifty percent activation is achieved by reducing the shear strengths in the Group 7 soil layers by 50%.

5.6. Perform structural design checks of the piles and T-wall to ensure that selected components are not overstressed and displacement criteria are met. Include stress check for the 100% $f_{ub}L_p$ applied to the lead pile as stipulated in Step 5.3.

5.7. Compare the allowable axial and shear capacity loads from Step 3 to the pile responses. If the axial and shear forces in any pile exceed the allowable pile loads the piles are considered over capacity and the pile design must be reconfigured.

3.5 LEVEE TIE-INS AND OVERTOPPING SCOUR PROTECTION

For a structural alternative on utility crossings, refer to **Section 5.0** Structures details. The tie-in details for T-walls and L-walls that terminate into a levee section must follow the latest guidance (**Section 5.0** Structures). Scour protection on the flood side and protected side of wall should follow the latest guidance presented in **Section 1.0** Hydraulics and **Section 5.0** Structures.

3.6 UTILITY CROSSING

These guidelines have been prepared after detailed review, analysis, and practical application of various methods and the performance of crossings subjected to Hurricane Katrina. These guidelines describe the only acceptable methods for pipeline crossings of levees which qualify as part of a **Federal Hurricane Protection Levee System**. The following is a brief description of the acceptable methods for crossing hurricane protection levees. In general, only four methods are allowed; directional drilling, structural elevated support, T-wall construction (utility passes through structure), or direct contact method. Exceptions to these four alternatives (such as buried jack-in-place I-walls with sleeves) may be allowed depending on site specific conditions. For typical details for utility crossings at levees and floodwalls, see **Section 12** Typical Drawings and Details.

3.6.1 Directional Drilling

Directional drilling consists of inserting the pipeline underground well below the hurricane protection system levee. This can be accomplished before, during or after

construction of a project. The required depth is a factor of local soil conditions, design elevation, and anticipated long-term consolidation and settlement of foundation soils. Pipelines must also be designed to emerge from underground at a safe distance from the limits of the project. Currently utility crossings using this method are reviewed individually upon submittal to MVN of a proposed design by the utility owner. General criteria for installing pipelines by near surface directional drilling under levees are discussed in Section 8-8 Installation Requirements of EM 1110-2-1913 (30 April 2000).

3.6.1.1 Layout

The pipeline entry or exit point, when located on the protected side of a levee, should be set back sufficiently from the protected side toe of the levee such that (a) the pipeline reaches its horizontal level (maximum depth), and/or (b) the pipeline contacts the substratum sands or some other significant horizon, at least 300 ft from the protected side of the levee toe.

When the pipeline entry and/or exit point are located on the flood side of protection, the entry and/or exit points should be positioned such that the pipeline is (a) landward of the projected 50-year bank line migration, (b) at least 20 ft riverward of the levee stability control line based on the applicable project FOS, and (c) at least 10 ft landward of the existing revetment. The purpose of this restriction is to avoid placing a potential source of seepage close to the levee stability control line, and also to help assure the pipeline retains adequate cover.

3.6.1.2 Design Criteria

The basic relationship for hydraulic fracture pressure (P_f) for undrained conditions is a function of the in-situ minimum principal total stress, σ_3, i.e. the sum of the overburden pressure plus the undrained shear strength (s_u) at the point of rupture. (Note: This does not include any side forces on the soil column.)

$$[1] \qquad P_f = \sigma_3 + s_u$$

Undrained conditions assume no flow of the borehole fluid into the soil formation. For bores in south Louisiana soils employing a bentonite drilling fluid with good wall cake, it is reasonable to assume that undrained conditions exist. The downhole or borehole mud pressure is composed of hydrostatic pressure (position head) and circulation pressure. The minimum FOS against hydraulic fracture shall be 1.5. FOS is defined here as the ratio of the existing overburden pressure (hydraulic fracture pressure P_f) to the downhole mud pressure (P_m).

$$[2] \qquad FOS = (\sigma_3 + s_u)/P_m$$

3.6.1.3 Guidelines for Permit Review

This list of general criteria is not intended to be all inclusive. Additional design details may be considered on a case-by-case basis. It is recommended that applicants for directional drilling permits and their designers schedule a meeting with the Corps of Engineers in the early stages of planning to discuss how these guidelines apply to their proposed work. Applications for directional drilling permits beneath levees/floodwalls will be evaluated primarily for their affect upon the integrity of the flood protection system.

Directional drilling will not be allowed in congested urban areas. Exceptions may be considered where population density and land use allow adequate room for expeditious replacement of the flood protection should hydraulic fracture or other damage occur.

- Applications for directional drilling permits shall furnish engineering evaluations and computations addressing all the issues presented here and provide specific measures of problem avoidance, dimensions, distances, pressures, weights, and all other pertinent data regarding drilling operations.
- Applications for directional drilling permits shall address the ratio of drill diameter versus installed pipe diameter and how seepage through the annular space will be avoided. The applicant should not over-ream the final drill hole, as seepage will potentially result.
- Applications for directional drilling permits shall include details demonstrating that the drilling operation will not create a hydraulic fracture of the foundation soil beneath and near the levee. Designers shall provide calculations confirming that the downhole mud pressure during the drilling operation results in a minimum FOS equal to 1.5 against hydraulic fracture of the levee foundation within 300 ft of the levee toe. These calculations shall bear the stamp of a registered civil engineer.
- Applications shall include a plan for mitigating the potential problem of hydrolock in the borehole due to unanticipated clogging of the return fluid, and the potential loss of drilling fluid return to the surface as a result of other unforeseen downhole problems.

3.6.1.4 Drilling Operations

The pilot hole cutter head must not be advanced beyond/ahead of the wash pipe more than a distance such that return flow would be lost. Also, the wash pipe ID should be sufficiently greater than the OD (cutting diameter) of the pilot cutter head such that return flow is enhanced. Applications for directional drilling permits shall directly address the methodology to be employed in the effort to keep the return of flow up the drill hole during the entire operation.

These requirements are to assure that blockage of the annular space between the wash pipe and drill pipe and associated pressure build-up do not occur.

- Drilling mud shall be of sufficient noncolloidal lubricating admixtures to (a) assure complete suspension and removal of sands and other "solids" cuttings/ materials, and (b) provide adequate lubrication to minimize bridging by cohesive materials thereby facilitating surface returns flow along the annular space.
- The fly cutter used in the prereamer run shall have an OD (cutting diameter) sufficiently greater than the OD of the production pipe such that the whole diameter remains adequate to minimize hang-ups of the production run and thereby, associated stresses on surrounding soils. Applications for directional drilling permits shall also address the increased seepage potential caused by this annular space developed during drilling.
- Prereamer runs shall be a continuous operation at least through the down-slope and up-slope cutting sections to prevent undue stress on the surrounding soils during re-start operations.
- Shut-off capability in the production pipeline should be provided to immediately cutoff flow through the pipeline should leakage occur.
- Positive seepage cutoff or control and impacts of future levee settlements on the pipeline must be addressed and supported approved engineering analyses.

3.6.1.5 Construction Schedule

All work on, around, and under levees or flood protection is season sensitive. Some levee/floodwall systems serve as hurricane protection, some are for river flooding, and still others are for a combination of these. There may be a season during which the sensitivity of the flood control system will not allow work. Designers should make every effort to discern the alternate methods of providing interim flood protection which may be required during each phase of work.

3.6.1.6 Monitoring and Liability for Damages

- Work shall be monitored by Corps representatives. Applicants shall inform the MVN Operations Division permits representative 36 hours in advance of beginning of installation. Drilling beneath levees shall begin during the daylight hours Monday through Friday to facilitate monitoring. The applicant must estimate his work schedule and inform the Corps so that representatives may have adequate time to study the site.
- The owner/applicant shall be liable for any damage to the levee resulting from drilling operations. Damage is defined as drilling fluid returns to the surface inside the levee cross-section. The owner/applicant shall replace and/or repair the damaged levee to the Corps of Engineers' satisfaction. Repair may include total replacement of the levee and installation of a grout curtain to the depth of the pipe. Repairs shall be performed in an expedited fashion to Corps specifications.
- Applications for directional drilling permits shall include a plan to replace the flood protection should damage occur. A typical sketch of this repair is shown for information only as **Figure 3.14**.

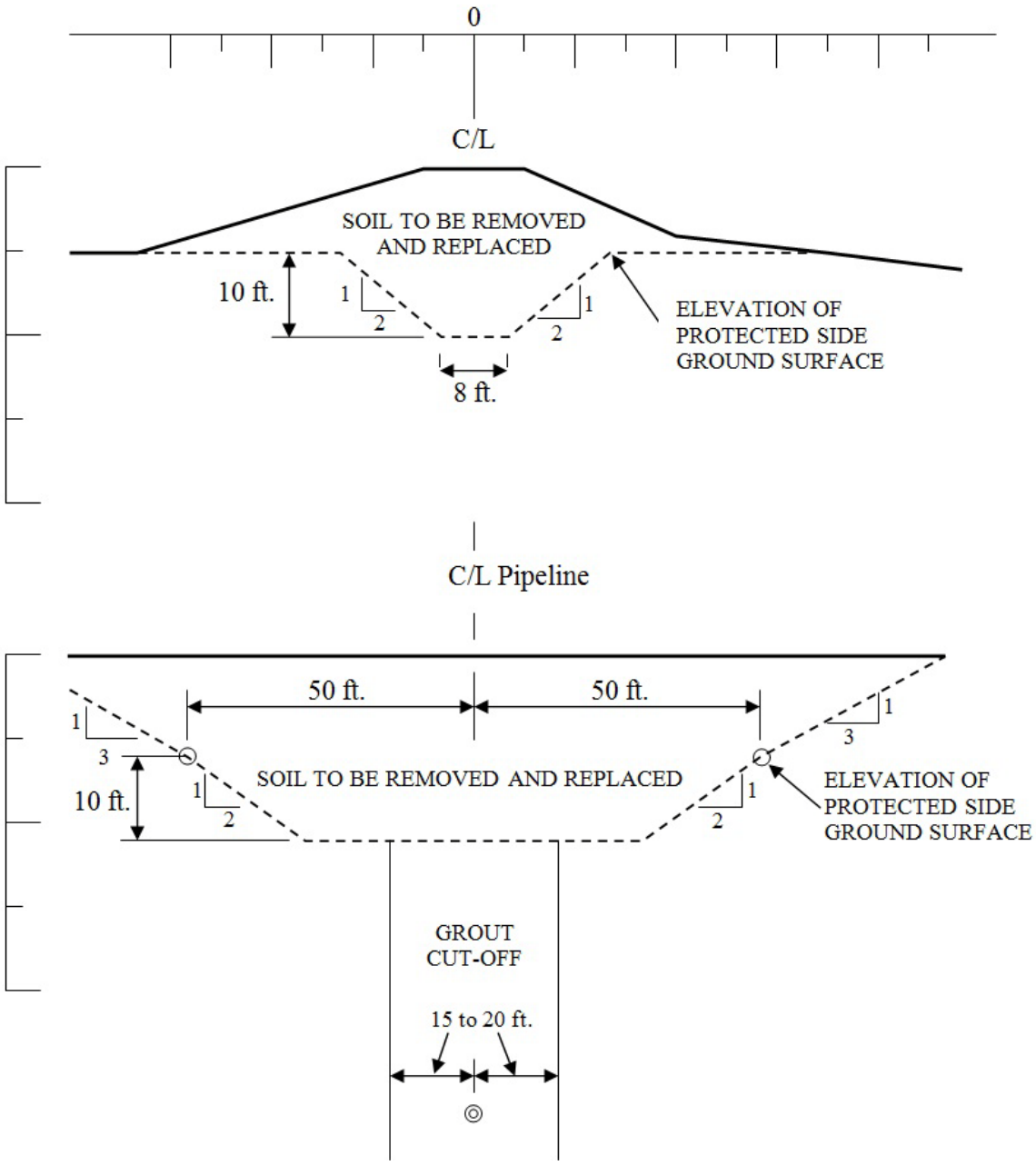

Figure 3.14 Sample Detail of Repair of Directional Drilling Damage to Levee

3.6.2 Structural Elevated Support

This method consists of a structure supporting the pipeline using pile bents and framing that elevates the pipeline a minimum of 15 ft above the authorized design grade and section. This method must be engineered for structural integrity, capacity and clearance for site-specific conditions. Some limitations are listed below:

- The low chord of the pipeline truss must be a minimum of 15 ft above the design section.
- If the truss carries power, the minimum above the design section increases to 18 ft for voltages up to 0.75Kv.
- Piles must be at least 10 ft from theoretical levee toe.

3.6.3 T-wall Construction

This method focuses on passing the pipeline through T-wall construction with the existing pipeline remaining in place. This method consists of constructing a pile-founded, inverted T-wall flanked by a sheet-pile wall on either side to provide seepage reduction measures for flood protection. The T-wall is built around the in-situ pipeline.

This will require that the pipeline be supported on pile bents for a distance on either side the T-wall to be determined by the pipeline owner. The pipeline can penetrate either the T-wall or its attendant cutoff wall depending on specific site conditions and pipeline geometry, but the T-wall is not allowed to support the pipeline. Again, existing site conditions must be taken into account when using this alternative.

3.6.4 Direct Contact Method

1. The pipeline owner has the option of placing the pipeline in direct contact with the surface of the newly constructed hurricane levee. This will require the owner to relocate the pipeline when the levee is raised because of settlement of change in design grade. The owners must also determine that the pipeline can sustain the settlement and resulting stresses that are associated with it. Slope pavement or other approved methods must be installed over pipeline throughout transition area.
2. A modification to the direct contact method is to place pile supports under the pipeline to mitigate the settlement problem. The supported pipe maintains its position as the levee settles beneath it without requiring removal and replacement as additional levee lifts are placed beneath the elevated pipeline. Erosion protection is required beneath the pipeline and around the support piles. Erosion protection will need to be removed and replaced after each levee lift. Since the pile supports are placed in the levee seepage reduction measure is required in the form of a sheet pile.
3. After the final levee lift is conducted and completed the pile supports are removed by cutting them off below the levee surface and the pipeline is placed in

direct contact with the levee and protected with earthen cover and erosion protection. Some limitations are listed below:

- Supports are allowed into the levee cross-section provided a sheetpile is constructed within the levee section. The vertical supports shall not be located within 15 ft of the levee C/L. The sheetpile must not only provide seepage reduction but also be stable in the event up to 6 ft of scour or erosion could take place. Sheetpile must extend at least 30 ft on either side of pipeline
- Settlement of pile bents within levee section must be addressed.
- Slope pavement over crown and on both protected side and flood side slopes with adequate joints to handle differential settlement must be installed above the pipeline and to a distance at least 10 ft past sheetpile. It is suggested that any pile be isolated from slope pavement. Settlement expectation shall be considered while designing scour protection to ensure that sheetpile or pipeline is embedded sufficiently to avoid contact with slope pavement.
- Access along the levees is required on the levee crown and/or by a road on the landside along the berm or at the levee toe. Pipeline crossings must be so designed to insure continuous access during its construction and adequate cover to provide for access over the completed crossing. The cover must be designed for HS20-44 loading over the line for the life of the crossing. (The HS20-44 loading is for tractor trailers and semi-trailers (including dump trucks) of variable axle spacing. This loading covers a gross truck weight of 20 tons and a rear axle weight of 16 tons).
- Stability analysis and settlement analysis will/may be required for pipeline crossings in some instances, particularly those involving the addition of a substantial amount of fill including road surfacing or the levee section and for levees that require future levee enlargements. The pipeline owner will need to contact the Corps for the slope stability FOS and load cases.

Other methods have been used in the past with unsuccessful results and are therefore not acceptable methods for pipelines crossing hurricane levees in this project area. In particular, the New Orleans District used the encasement method on an experimental basis in a hurricane protection levee on the west bank of Jefferson Parish. The first time a tropical event was experienced, the bentonite washed out, causing a significant seepage problem. In addition, pipelines passing through I-walls are not allowed.

3.7 BORROW SPECIFICATIONS

Material, quality control, and construction specifications for levees and embankments is fully detailed in the New Orleans District's Standard Specification 31 24 00.00 12. Parts of that specification are reproduced here for easy reference by engineers engaged in design work for the HSDRRS.

3.7.1 Material

Embankments shall be constructed of earth materials naturally occurring or Contractor blended. Materials that are classified in accordance with **ASTM D 2487** as CL or CH with less than 35% sand content are suitable for use as embankment fill. Materials classified as ML are suitable if blended to produce a material that classifies as CH or CL according to **ASTM D 2487**.

All fill materials shall be free from masses of organic matter, sticks, branches, roots, and other debris including hazardous and regulated solid wastes. As earth from the designated excavation areas may contain excessive amounts of wood, isolated pieces of wood will not be considered objectionable in the embankment provided their length does not exceed 1 foot, their cross-sectional area is less than 4 square inches, and they are distributed throughout the fill. Not more than 1% (by volume) of objectionable material shall be contained in the earth material placed in each cubic yard of the levee section. Pockets and/or zones of wood shall not be placed in the embankment.

Materials placed in the section must be at or above the Plasticity Index of 10. As a precaution, Contractors are required to notify the Contracting Officer whenever the in-place Plasticity Index of the material is 15 or less.

Materials placed in the section must be at or below organic content of 9% by weight, as determined by **ASTM D 2974**, Method C.

3.7.2 Quality Control

Control Testing:

The Contractor shall perform all control testing such as soil classification, moisture content, control compaction curves, organic content, sand content and in-place density. The results of all tests shall be reported to the Contracting Officer's representative within 24 hours of sampling, except for the organic test results, which shall be reported within 48 hours of sampling. To ensure contract compliance, the Contractor shall submit the results of the control compaction curves, in-place density tests, moisture content tests, one-point compaction tests, sand content tests, and organic content tests to the Contracting Officer's Representative so they can be faxed to Chief of Geotechnical Branch at 504-862-2987. The Contractor's QC test results of in-place compaction, soil classification, moisture content, sand content, organic content, and compaction curves shall be provided to Engineering Division, Geotechnical Branch, on a regular basis throughout the contract, but no later than 5 days of receiving results. Testing shall be

performed by a Government-approved testing agency, organization or field laboratory including on-site testing labs operated by QC personnel. Criteria used for obtaining Government approval shall be in accordance with **ASTM E 329**. Microwave testing for moisture control in accordance with **ASTM D 4643** is allowed in the Contractor's field laboratory. No additional payment will be made for control testing required in this paragraph. All costs in connection therewith shall be included in the contract unit price for "Embankment, Compacted Fill". Documentation of sampling locations for the following tests shall be clearly defined by levee station and offset and also by lift number or elevation. As a minimum, the following tests are required:

1. **Soil Classification Tests.** Determination of soil classification shall be in accordance with **ASTM D 2487**. Atterberg Limits Test required for soil classification shall be performed in accordance with **ASTM D 4318**. One Atterberg test shall be obtained from the sample material used for each control compaction curve and one shall be obtained from the sample material used for each in-place density test. If the Nuclear Method is used, the material to be tested shall come from within a radius of 12 inches of the center of the in-place density test site. The soil classification obtained from in-place density tests will serve as the basis for determining the applicable control compaction curves. In addition, classification tests shall be performed on uncompacted fill at a minimum frequency of one test per 1,000 linear feet per lift placed in the levee section.

2. **Control Compaction Curves** - Compacted Fills. Control compaction curves shall be established in accordance with **ASTM D 698** (Standard Proctor Density Tests). Two control compaction curves will be required for each type of material from each source. Where construction operations result in blending of several types of material prior to or during fill placement within the embankment design sections, two control compaction curves will be required for each resulting blend of material and will be utilized in lieu of those required for the "unblended materials". The average of the two tests shall be the controlling optimum moisture content and maximum density.

3. **In-Place Density Tests -** In-place density tests for compacted fill material shall be made in accordance with **ASTM D 2922** (Nuclear Method) or **ASTM D 1556** and shall be made at a minimum frequency of one density test per lift per [1500] cubic yards of compacted fill placed in the levee per lift, but not less than one density test per [500] feet per lift. At least one test shall be performed in any shift that compacted fill is placed. A lift on any one side of the existing embankment will be considered one lift. The location of the test shall be representative of the area being tested or as directed by the Contracting Officer. For each in-place density test, the Contractor shall determine the percentage of **ASTM D 698** maximum dry density and the deviation from optimum water content in percentage points (plus or minus), using the control compaction curves for the same type of material. The appropriate control compaction curve shall be selected by using the one-point compaction test when available or visual soil classification and soil classification test.

   If the Nuclear Method is selected for field density testing, the dry density shall be determined by using the value of wet density reported by the nuclear density

equipment and the value of moisture content obtained from **ASTM D 2216** or **ASTM D 4643**. The Contractor shall not use the value of dry density reported by the nuclear density equipment.

The Sand-Cone Method shall be used to confirm the accuracy of the Nuclear Method. This can be accomplished by performing an initial comparison test of the two methods at the start of construction. If the Nuclear Method wet density is within 3 percent of the Sand Cone Method, no correction of the Nuclear Method wet density will be required and the testing may continue with the Nuclear Method. The Nuclear Method wet density shall be verified throughout the project at a rate of one Sand-Cone test for every ten nuclear tests thereafter. If the variance at any time exceeds 3 percent, a correction factor will be required to be determined prior to any further testing. For comparison purposes, the nuclear and sand-cone wet densities should represent the same layer thickness within the testing area selected. When a nuclear density result is in doubt, the sand-cone density test shall be used for acceptance.

The correction factor shall be determined by conducting ten comparison tests (five **ASTM D 2922** and five **ASTM D 1556**) and calculating the average difference (correction) for each soil type encountered. The developed correction shall be used for adjusting the nuclear wet density readings. The results of the in-place density, moisture content, and one point compaction test shall be reported to the Contracting Officer's representative by the end of the working day following the in-place density test.

4. **One-Point Compaction Test**. As a minimum, the Contractor shall perform a one-point compaction test at every fifth (5th) in-place density test. If the Nuclear Method is used for in-place testing, every other one-point compaction test shall be performed at the sand-cone verification test location on a sample from the same material location as the in-place density test in accordance with **ASTM D 698**. The material shall be compacted at the same water content as the field test if it is estimated to be on the dry side of optimum laboratory water content. If the field water content is estimated to be above the optimum water content, the corresponding lab sample shall be dried to an estimated water content which is not more than 3 percent dry of the actual optimum water content. The water content/dry density point on the one-point compaction test shall be plotted on the family of curves for the same soil type from the same borrow source. The compaction control curve is estimated by projecting a curve that is parallel to the adjacent compaction curves. The optimum water content and maximum dry density shall be estimated from the control compaction curve. If the laboratory data plots outside of the available family of compaction curves, the Contractor shall perform a complete compaction test in accordance with **ASTM D 698**.

5. **Moisture Content Tests**. Moisture content tests at each density test location shall be taken to assure compliance with requirements for fill placement within the design sections as specified in paragraph "Moisture Control" of the New Orleans District’s Standard Specification. Determination of moisture content shall be performed in accordance with **ASTM D 2216** or **ASTM D 4643**. Determination of moisture content shall not be performed in accordance with **ASTM D 3017** (Nuclear Method).

6. **In-Place Organic Content Tests**. Organic content tests shall be taken at each in-place density test location. In addition, organic content tests shall be performed on uncompacted fill at the same locations as the soil classification tests as specified in paragraph New Orleans District's Standard Specification. Limits of organic content are specified in paragraph MATERIALS. Determination of organic content shall be performed in accordance with **ASTM D 2974**, Method C.

7. **Sand Content Tests**. One sand content test shall be obtained from the sample material used for each control compaction curve and one shall be obtained from the sample material used for each in-place density test. In addition, sand content tests shall be performed on uncompacted fill at the same locations as the soil classification tests as specified in New Orleans District's Standard Specification. Limits of sand content are specified in paragraph MATERIALS. Determination of sand content shall be in accordance with **ASTM D 1140**

3.7.3 Construction

Compacted fill shall not be placed in water. The materials for compacted fill shall be placed or spread in layers, the first or bottom layer and the last two layers not more than 6 inches in thickness and all layers between the first and the last two layers not more than 12 inches in thickness prior to compaction except the first layer on top of a geotextile shall be 15 inches, plus or minus 3 inch tolerance, as specified in Section 31 05 19.03 12 GEOTEXTILE SEPARATOR UNDER LEVEE CROWNS, ROADS, OR RAMPS.

Layers shall be started full out to the slope stakes and shall be carried substantially horizontal and parallel to the levee C/L with sufficient crown or slope to provide satisfactory drainage during construction. Areas on which geotextile is to be placed shall be dressed out and leveled to the grade indicated on the drawings. When placing fill on the geotextile, mechanical equipment shall not be allowed to come in contact with the geotextile in any way.

4.0 LEVEES

4.1 Sampling of References

- EM 1110-2-1913, Design and Construction of Levees, 30 Apr 00
- LADOTD Standard Specifications for Roads and Bridges, Louisiana Department of Transportation and Development

In addition, Section 12 of this document includes typical details applicable to levee design and construction.

4.2 Preliminary Work

4.2.1 Develop Project Delivery Schedule

Develop project delivery schedule in advance of anticipated start date. A standard timeline based on complexity of project shall be utilized as a basis for developing the schedule. Accelerated design contracts shall be adjusted accordingly to meet project deadlines for project delivery completion dates. The Product Delivery Team (PDT) members shall be consulted to provide time frames for incorporation into the schedule.

4.2.2 Initial Project Site Visit

Visit the site of work with the PDT. The site visit is commenced after becoming familiar with the area through the office study. Walking the proposed project and potential borrow areas shall be performed to gather physical information. Physical features to be observed are inventoried by detailed notes, supplemented by photographs. Local persons, the local sponsor and/or organizations having knowledge of existing conditions and facilities in the area should be interviewed to gather information concerning subsurface utilities, historical problematic conditions, etc. A site inspection report shall be prepared for permanent files summarizing the findings with prints of significant photos.

4.2.3 Preliminary Requests to PDT

Request right of entry (ROE) for surveys, borings, HTRW, cultural resource and environmental investigations encompassing the entire project area and potential borrow areas as determined during the initial project site visit.

4.3 Project Delivery Work

4.3.1 Request for Initial Engineering Input from PDT

Request initial utility locations/ownership determination, field surveys, design borings, hydraulics and initiation of preliminary HTRW, cultural resource and

environmental investigations. A sample survey request form for internal MVN use is shown in Figure 4.1. Note in 4.3.2 below that further information is to be provided to the Environmental Team with additional detailed input for the investigations.

4.3.2 Construction Solicitation Documents Preparation

4.3.2.1 Initiate Final Requests for Engineering Input into Construction Solicitation Documents

Upon receipt of field surveys, verify that they have been performed as requested and are complete and include all requested deliverables. Upon receiving the soils report for the project from the Geotechnical Team, read and understand the report and required construction items to be included in the construction documents.

Investigate the impacts of construction using multiple lifts in coordination with the Geotechnical Engineer and the rest of the design team. Seek a plan that will provide high levels of protection quickly while minimizing costs. Consider the need for future lifts due to long-term settlement, sea level rise, etc., in order to maintain authorized Level of Protection throughout project design life.

Based on required embankment design from the soils report, determine initial fill quantities and consult with the Geotechnical Team to determine most suitable borrow area(s) to take detailed surveys and borrow borings. Request ROE for borrow area surveys and borrow borings. Drainage impacts of the required embankment sections shall be investigated and the Hydraulics Team shall be consulted to determine adjustments to existing drainage features.

Request Environmental Team to begin all HTRW, cultural resource and environmental clearances of project and borrow area. The request shall include all information and drawings as stipulated in the appendix to this section describing Engineering Input.

4.3.2.2 Right of Entry for Construction

Prepare request for ROE into right of way (ROW) from Real Estate Team.

Prepare ROW drawings showing limits of project and existing and new ROW (if needed), required construction easements, required limits of construction within existing ROW and all temporary access easements. The required design section shall be applied to the existing surveys to determine extents of work to be constructed outside of existing ROW. A meeting with the Geotechnical Team shall be held to determine if there are any alternative design sections to keep the design section within existing ROW (i.e. structural solutions, reinforcement geotextile to reduce berm section, etc.). A cost comparison shall be investigated

to determine most feasible solution (i.e., acquire new ROW vs. cost of I-Wall, T-Wall or a geotextile reinforced section).

Determine impacts to required new right of way of the authorized grade level of protection and 50 year future level of protection design section (to be provided from Geotechnical Team with final soils report). Meet with the Project Manager to evaluate the 50 year future levee footprint and potential to construct 50 year future design section versus authorized grade levee. Consideration will also be given to acquiring a minimum 15 feet beyond the toe of the levee to enhance access for maintenance and to keep trees and adjacent construction well clear of the design section.

Send request for ROE for construction ROW (with ROW drawings as prepared above) to Real Estate Team.

4.3.2.3 Construction Solicitation Documents

Using the design input from all PDT members, prepare detailed plans for construction of the flood protection project. Include all necessary details for construction of the flood protection project. Prepare specifications including all required technical specification sections and a bid schedule to include all biddable items. Calculate all quantities.

Conduct Independent Technical Review (ITR). Upon completion incorporate all changes to the construction solicitation documents as a result of the ITR. Obtain ITR certification.

Conduct BCOE Review. Construction solicitation documents shall be sent to all PDT members, other offices required, local sponsor, utility owners, and all local, state, and Federal agencies as required to review the P&S.

A plan-in-hand site inspection shall be conducted during BCOE review period. The PDT, Construction Division representatives, local sponsor and other persons as required based on project shall take part. Any changes to existing site conditions, potential design changes, etc shall be documented and photographed. A brief report of the plan-in-hand inspection indicating significant findings shall be prepared and disseminated to the PDT.

Evaluate all comments from the BCOE review.

Note that all reviews shall be conducted in DrChecks, and are considered complete when all comments are closed. The comments and comment evaluations must be thoroughly reviewed and checked prior to final input into the DrChecks review system.

A BCOE comment resolution meeting shall be held with all commentors to evaluate comment responses and resolve any and all comments not adequately evaluated. A brief report shall be prepared for the files transcribing discussions during the meeting. All DrChecks comments shall be closed out for BCOE completion.

All changes as a result of BCOE review shall be incorporated into the construction solicitation documents. All quantity calculations shall be verified and the documents checked thoroughly prior to the 100% complete documents being delivered to begin advertisement.

4.4 Engineering Input for NEPA

4.4.1 Description of Work

Provide a general description of work including the purpose and need for the work and alternatives considered. The description must include the following: method and duration of construction, time of construction (season, daytime only 24 hr. etc), equipment used, description of site preparation (grubbing etc), types of equipment used, description of construction access routes to include haul roads, residential routes and flotation channels etc., borrow needs and location. If any borrow material is utilized note the source, location, deposition area and whether the pit is existing and permitted or new.

4.4.2 Maps and Drawings

Provide an electronic copy (Jpeg or PDF file) of project vicinity map vicinity map.

Provide an electronic copy (Jpeg or PDF file) of the project footprint and construction area as an overlay on the most current aerial photography of the site. The electronic site map should also include latitude and longitude, north arrow, and identifier place name.

Provide engineering drawings (jpeg or PDF) of levee sections excavation etc.

Line work should include acreage of footprint affected by the project, limits of work, construction right of way, no work zones, stockpile area, staging areas, wash racks, fuel containment areas etc.

Where the footprint will exceed the original levee footprint the new area of impact should be clearly indicated on the drawing.

Required borrow areas should be identified on a vicinity map, current aerials with north arrow, latitude and longitude as well as acreages of the pit delineated.

Drawings of canal work or channel improvements denoting dredged depth and changes in configuration.

Drawings shall note all areas such as commercial storage, abandoned gas/fuel stations, etc., which could contain obvious potential HTRW or environmental issues. The designer shall consult with the Environmental Team Leader on such areas to determine applicability of engineering information to be provided.

4.4.3 Borrow Material

Prepare a map of borrow areas as noted above.

Note cubic yards of material used.

Provide soil type (as noted in borings i.e. sandy loam, clays w/ organics etc.).

Provide containment analysis if applicable.

Note where material is deposited (either stockpiled, used or both).

CEMVN-ED-L

MEMORANDUM FOR C/Design Services Branch Date:

SUBJECT: Survey Request Form Job No.:

1. Job Title:

2. Job Location:
   Levee District:
   Nearest Town:

3. Type of Survey: (Check as Applicable)
   a. [ ] Cross-Sections; Approx Number:
   b. [ ] Profile(s); Estimated Length:
   c. [ ] Hydrographic
      Referenced to [ ] C/L [ ] B/L
   d. [ ] B/L Traverse; Estimated Length:
      [ ] New [ ] Re-establish [ ] Recover [ ] Offsets Allowed
   e. [ ] C/L Traverse; Estimated Length:
      [ ] New [ ] Re-establish [ ] Recover [ ] Offsets Allowed
   f. [ ] Reference Off-sets
   g. [ ] Other: _____

Station Limits	Cross-Section Interval	Shot Int.

4. Control:

	Vertical	Horizontal
Enclosed:	[ ] Yes [ ] No	[ ] Yes [ ] No
Datum:	[ ] NAVD88	[ ] NAD-1927
	[ ] NGVD-1929 (MSL)	[ ] NAD-1983
	[ ] CAIRO	[ ] Pre-83
Epoch:	[ ] 2004.65	
	[ ] Post-83 (Latest)	
	[ ] Other Pre -83	
Accuracy Required:		
	[ ] 3rd	[ ] 3rd

5. Description of work to be performed:

6. Field Books Required: [ ] Yes [ ] No

7. Right of Entry Available: [ ] Yes [ ] No
   Available by:
   Requested on:

8. Please Provide: [ ] Cost Estimate
   [ ] Time Schedule
   [ ] Resume of Negotiations

Figure 4.1 Sample Survey Request Form (continued on next page)

9. Cost Account #'s:
   Contract:
   In-House:
   S & I:

10. Date Completed Survey Required:

11. Copy of Plans, Maps, Drawings, Etc. Enclosed: [ ] Yes [ ] No

12. Point of Contact:

LOUIS E. DANFLOUS, P.E.
Chief, Civil Branch

Encls

Figure 4.1 Sample Survey Request Form (continued from prior page)

5.0 STRUCTURES

5.1 In General

This guidance applies to structures whose primary function is hurricane flood protection in the New Orleans area, which includes T, L & I-walls, sluice gates, fronting protection and flood gates. Sector gates and other navigable waterway structures shall have all design criteria approved prior to design.

The Corps of Engineers is governed by engineering regulations (ER's), engineering manuals (EM's), engineering technical letters (TL's) and engineering circulars (EC's). These Corps publications are available on line at the following web site: http://publications.usace.army.mil/publications. The designer is responsible for compliance with all civil works engineering regulations, circulars, technical letters and manuals (Corps publications). For convenience, this document highlights certain Corps publications that engineers should be aware of. Also, specific design criteria are identified in the following sections that may not agree with the Corps publications; in this case, the more conservative criteria shall be applied. Industry standards shall apply when Corps criteria is not applicable.

5.1.1 Sampling of References

USACE Publications

- EM 1110-2-2102, Waterstops and Other Preformed Joint Materials for Civil Works Structures, Sept 95
- EM 1110-2-2104, Strength Design for Reinforced Concrete Hydraulic Structures, June 92 (Including Change 1, Aug 03)
- EM 1110-2-2105, Design of Hydraulic Steel Structures (including Change 1), May 94
- EM 1110-2-2502, Retaining and Flood Walls, Sept. 89
- EM 1110-2-2906, Design of Pile Foundations, Jan. 91
- EM 1110-2-2503, Design of Sheet Pile Cellular Structures Cofferdams & Retaining Structures, Sept. 89
- EM 1110-2-2504, Design of Sheet Pile Walls, Mar. 94
- EM 1110-2-2705, Structural Design of Closure Structures for Local Flood Protection Projects, Mar. 94
- EM 1110-2-1901, Seepage Analysis and Control for Dams, Apr 93
- EM 1110-2-2100, Stability Analysis of Concrete Hydraulic Structures, Dec 05

Technical Publications

- American Concrete Institute, Building Code and Commentary, ACI 318-02
- American Institute of Steel construction, Manual of Steel Construction (9th Ed.)
- American Welding Society, AWS D1.1 (2006)
- American Welding Society, AWS D1.5 (2002)

- ASCE/SEI 7-05, Including Supplement No. 1, Minimum Design Loads for Buildings and Other Structures

Computer Software

- CE Pile Group Analysis Program, “CPGA”
- CE Structural Analysis Program, “C-Frame”
- CE Strength Analysis of Concrete Structural Elements, “CGSI”
- CE Sheet Pile Wall Design/Analysis Program, “CWALSHT”
- Structural Analysis and Design Software, “STAAD”
- Ensoft, “Group 7.0”
- Additional approved USACE programs

5.1.2 Survey Criteria

Surveys shall conform to “USACE New Orleans District Guide for Minimum Survey Standards” (see Section 9) and the following guidance at a minimum. A typical scope of services for surveys in support of structural designs is included in Section 9.4.

5.1.3 General Design Criteria

Walls shall be constructed using the latest datum from Permanent Benchmarks certified by NGS - NAVD88. A total of three Permanent Benchmarks are required, one for design/construction and two for verification.

The following is a summary of recommended wall heights:

- I-Walls – 4 ft. maximum (Includes required 6 inches of overbuild. 6 inches of additional wall height is historically added to the top of I-walls to accommodate future subsidence in soft soils. This additional 6 inches is not added to T or L type walls since their deep pile foundations do not typically experience the same settlements as an I-wall.)
- T-Walls – No height limit; Typically 4 ft. and greater
- L-Walls / Kicker Pile Walls – 8 ft. maximum

The above permitted heights are measured on the protected side of the wall. The flood side height may be increased by 2 feet for both I-walls and L-Walls.

Structural Superiority – All new structures that are difficult to construct due to their nature, such as railroad and highway gate monoliths that require detours causing disruptions to traffic, pumping station fronting protection that require cofferdams within their discharge basins causing reductions to pumping capacity, sector gated structures causing disruptions to navigation, large utility crossings, etc., shall be designed with a minimum of 2 ft. of additional wall height. This additional height shall be included in all top of wall load cases. All variances shall be approved by the USACE engineer of record. Note that DIVR 1110-1-16 also provides guidance for structural superiority for major

hydraulic structures and is not applicable to hurricane protection floodwalls and fronting protection type structures designed utilizing the HSDRRS design criteria, whereas the height increase is similar, the HSDRRS is more applicable to coastal areas.

All concrete capped I-walls shall have 6 in. minimum overbuild. I-walls shall be symmetrical so not to create an unbalance concrete section.

T-walls are the recommended type of floodwalls where there is the potential for barge/boat impact loading or unbalanced forces predicted from a global stability analysis. Global stability, as it affects T-wall foundation design, is addressed in Section 3.4.3 T-Wall Design Procedure.

L-Walls may also be used where there is the potential for barge/boat impact loading; however, they shall **not** be used where an unbalanced force is predicted based on a global stability analysis.

Typically, I-walls shall **not** be used on navigable waterways or where there is the potential for barge/boat impact loading unless measures (such as berms for grounding vessels or separate pile fender systems) are taken to protect the wall. When placed atop a levee crown, walls under 2' (on both sides of the F/W) are permissible provided they are located on the protected side of the levee crown and armoring is provided on the protected side. However, I-walls are acceptable as tie-ins to levee embankments. Site and soil conditions will dictate their use in these applications.

Lengths of L-Wall or T-wall monoliths should generally be 40 to 60 feet between expansion joints. I-wall monoliths should generally be 30 to 40 feet.

Where walls form corners at Points of Intersection (PI), walls shall extend monolithically past the PI a minimum of 5 ft., but not less than 2 full sheet piling sections and at least one row of support piling, before terminating the monolith.

Fabricated sheet pile corners and connectors shall be bolted using 7/8" diameter high strength bolts meeting the requirements of ASTM A 325, Type 3, or ASTM A 490, Type 3. The bolts shall be spaced on 6 inch centers for the length of the section except for 2 feet at each end where they are spaced on 3 inch centers. Welding of the longitudinal sheet pile joint is **not** typically allowed and will only be permitted on seepage cut-off sheet piling driven in soft soils with no obstructions anticipated.

In lieu of fabricated sheet pile corners and connectors, one piece seamless extruded pile corners and connectors **shall** be allowed. The extruded pile corners and connectors shall be fabricated from the same grade and strength material as the adjoining sheet piling sections.

Geotechnical Engineers shall minimize the height of the wall system by designing the largest earthen section that is practical and stable for each individual project.

Seepage, global stability, heave, settlement and any other pertinent geotechnical analysis shall be performed in order to ensure that the overall stability of the system is designed to meet all Corps criteria.

Flood wall protection systems are dedicated single-purpose structures and shall not be dependent on or connected to other (non-Federal) structural or geotechnical features that affect their intended performance or stability.

5.2 T-wall & L-wall Design Criteria

T-walls, whose primary function in the New Orleans area is flood protection, are pile founded structures that consist of a reinforced concrete wall and base with steel sheet pile cut-off. Steel or prestressed concrete piles are battered towards the protected and flood sides and are the main components that support the concrete wall and base. The primary purpose of the steel sheet piling is to provide a seepage cutoff beneath the wall. T-wall foundation design procedures are included in Section 3.4.

T-walls exhibited the best overall performance during Katrina. Due to the transfer of all applied loadings to deeper soil strata, the T-wall, as a rule, is more resilient to overtopping and global instability than L-walls or I-walls. Additionally, because of the robust nature of the T-wall and its foundation, it is not as susceptible to catastrophic failure if impacted by debris or marine vessels (i.e. if struck by a barge, any failure would be localized to the impact point, versus I-wall, where progressive failure due to the erosion of passive resistance upon breaching would be likely) or there is a potential of foundation instability due to unbalanced loading.

Guidance on floodwalls subject to impact loads, is provided in Sections 5.2.1. Loading Conditions, 5.8 Impact Barriers (Dolphins, Pile Clusters, etc.) and 5.9 Loading Tables & Impact Maps.

L-walls are similar to T-walls except that the steel sheet pile replaces the flood side pile row.

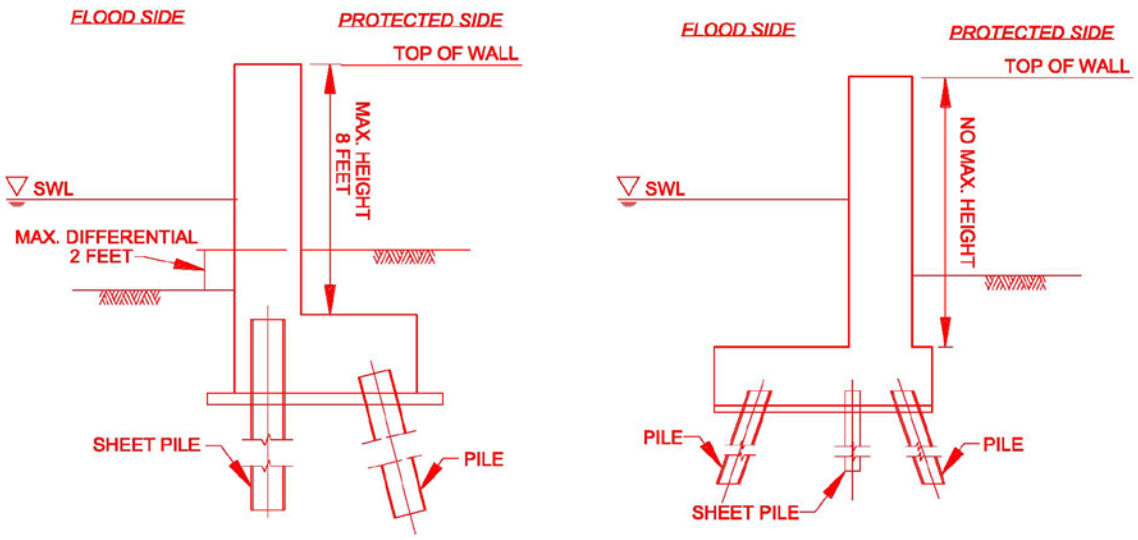

L-WALL **T-WALL**

Figure 5.1 Typical T-Wall and L-Wall Configuration

5.2.1 Loading Conditions

1) Load Cases. See Section "5.7 General Load Case Tables."

2) Impact Load Cases. See Section "5.9 Loading Tables & Maps" for additional guidance.

BARGE IMPACT - This guidance only addresses Hurricane event induced forces, it does not include any load case requirements for Marine Vessel navigation impacts which shall also be considered where applicable. The included Zone 1 load cases apply only to hurricane protection structures exposed to barge traffic. Impact barriers can be used to shelter hurricane protection structures; the loading would then be reduced to the Zone 3 Debris Loading. Impact barriers are covered in para 5.8. Based on IPET data, the single, light barge was selected as the design vessel. A full barge was also studied but the heavier vessel did not govern as the velocities were considerably less. For the Unusual load case, due to the instantaneous nature of the barge impact as compared to the much longer wave period, the barge impact and wave forces were considered to **NOT** occur simultaneous.

Zone 1A - Barge Impact Design Load Cases (Southeasten Louisiana, Protected Waterways)

a. USUAL. Under usual conditions, the probability of barge impact is low and considered an unusual case; therefore, barge impact shall not be included as a usual load case.

b. UNUSUAL . A barge impact force of 200 kips shall be applied at the Top of Wall (TOW), including any Structural Superiority. The barge impact loading shall be combined with the hydrostatic pressure induced by the (100-yr) SWL, at 90% confidence, plus a wind load on any exposed portion of the wall above the (100-yr) SWL. The wind load, to be used in conjunction with the boat impact analysis, shall be computed in accordance with the following simplified formula, $F = .00256 (V^2)(I)(A)$, where the minimum wind velocity (V) shall be 140 mph, utilizing an Importance Factor (I) of 1.15, applied to the gross exposed area (A). The permitted pile capacity Factors of Safety and structural component overstresses are provided in Table 5.2 (b).

c. EXTREME - Case I. A barge impact force of 400 kips shall be applied at the Top of Wall (TOW), including any Structural Superiority. The barge impact loading shall be combined with the hydrostatic pressure induced by the (100-yr) SWL, at 90% confidence, plus a wind load on any exposed portion of the wall above the (100 yr) SWL. The wind load, to be used in conjunction with the boat impact analysis, shall be computed in accordance with the following simplified formula, $F = .00256 (V^2)(I)(A)$, where the minimum wind velocity (V) shall be 160 mph, utilizing an Importance Factor (I) of 1.15, applied to the gross exposed area (A).

d. EXTREME - Case II. A barge impact force of 200 kips shall be applied at the Top of Wall (TOW), including any Structural Superiority. The barge impact load shall be combined with the hydrostatic pressure induced by the (100-yr) SWL and the (100-yr) wave load, at 90% confidence.

The Extreme Load Cases shall not exceed the ultimate capacity of the structure as determine by a Push-Over analysis. An example of the push-over analysis is attached as an Appendix. In lieu of a push-over analysis, capacity can be determined by an elastic analysis of all structural components and limiting the pile capacity Factors of Safety and structural component overstresses and Load Factors to those designated in Table 5.2 (b).

Zone 1B - Barge Impact Design Load Cases (Southeastern Louisiana, Waterways Directly Exposed to Tidal Surge (500-yr) SWL)

a. USUAL. Under usual conditions, the probability of barge impact is considered low and shall not be included as a usual load case.

b. UNUSUAL. A barge impact force of 225 kips shall be applied at the lower of the Top of Wall (TOW), including any Structural Superiority, or the (100-yr) SWL plus 7 ft. The barge impact loading shall be combined with the hydrostatic pressure induced by the (100-yr) SWL, at 90% confidence, plus a wind load on any exposed portion of the wall above the (100-yr) SWL. The wind load, to be used in conjunction with the boat impact analysis, shall

be computed in accordance with the following simplified formula, $F = .00256 (V^2)(I)(A)$, where the minimum wind velocity (V) shall be 140 mph, utilizing an Importance Factor (I) of 1.15, applied to the gross exposed area (A). The permitted pile capacity Factors of Safety and structural component overstresses are provided in Table 5.2 (b).

c. EXTREME - Case I. A barge impact force of 450 kips shall be applied at the lower of the Top of Wall (TOW), including any Structural Superiority. or the (500 - yr) SWL plus 7 ft. The barge impact loading shall be combined with the hydrostatic pressure induced by the (500-yr) SWL, at 90% confidence, plus a wind load on any exposed portion of the wall above the (500-yr) SWL. The wind load, to be used in conjunction with the boat impact analysis, shall be computed in accordance with the following simplified formula, $F = .00256 (V^2)(I)(A)$, where the minimum wind velocity (V) shall be 160 mph, utilizing an Importance Factor (I) of 1.15, applied to the gross exposed area (A).

d. EXTREME - Case II. A barge impact force of 225 kips shall be applied at the lower of the Top of Wall (TOW), including any Structural Superiority, or the 100 yr SWL plus 7 ft. The barge impact load shall be combined with the hydrostatic pressure induced by the (100-yr) SWL and the wave load, at 90% confidence.

The Extreme loadings shall not exceed the ultimate capacity of the structure as determine by a Push-Over analysis. An example of the push-over analysis is attached as an Appendix. In lieu of a push-over analysis, capacity can be determined by an elastic analysis of all structural components and limiting the pile capacity Factor of Safety and structural component overstresses and Load Factors to those designated in Table 5.2 (b).

BOAT IMPACT – This guidance only addresses Hurricane event induced forces, it does not include any load case requirements for Marine Vessel navigation impacts. The load applies only to structures not exposed to barge traffic, such as pleasure craft and fishing boats.

Zone 2 - Boat Impact Design Load Case

a. USUAL. Under usual conditions, the probability of boat impact is considered low and shall not be included as a usual load case.

b. UNUSUAL (100-YR). A boat impact force of 50 kips shall be applied at the lower of the Top of Wall (TOW), including any Structural Superiority, or the (100-yr) SWL plus 7 ft. The boat impact loading shall be combined with the hydrostatic pressure induced by the (100-yr) SWL, at 90% confidence, plus a wind load on any exposed portion of the wall above the (100-yr) SWL. The wind load, to be used in conjunction with the boat impact analysis, shall be computed in accordance with the following simplified formula, $F = .00256 (V^2)(I)(A)$, where the minimum wind velocity (V) shall be 140 mph, utilizing an Importance Factor (I) of 1.15, applied to the gross exposed area (A). The permitted pile capacity Factors of Safety and structural component overstresses are provided in Table 5.2 (b).

c. Extreme load case is not applicable.

DEBRIS IMPACT

Zone 3 – Debris Impact Design Load Case

a. USUAL. Not Applicable.

b. UNUSUAL. All floodwalls outside locations of barge / boat impact zones, shall include a minimum debris impact loading of 0.5 kips/ft, applied at the TOW, but not to exceed the (500-yr) SWL.

c. EXTREME. Not Applicable.

5.2.2 Pile Foundations – Precast-Prestressed Concrete, Steel (H and Pipe) and Timber

5.2.2.1. Pile Design.

The factors of safety with no overstress for all MVN projects are:

	With Pile Load Test	W/O Pile Load Test
Q-Case	2.0*	3.0
S-Case	1.5	1.5

* FOS = 2.5 must be used with a PDA test for the Q-case (for compression piles only)

Q-Case = Unconsolidated - Undrained Shear Strength Test for soils

S-Case = Consolidated - Drained Shear Strength Test for soils

Spiral Welded Pipe (SWP) fabricated in accordance with ASTM A252 is only allowed in the design and construction of temporary retaining structures and work platforms. In permanent hydraulic structure foundations, SWP is permitted for use as service piles in flood protection foundations, but must comply with more stringent fabrication specifications, subject to the following:

- Use is limited to piles with outside diameters from 18 to 54 inches and wall thicknesses not greater than 1-1/8 inches. Negative wall thickness tolerances are not permitted
- The pile diameter to wall thickness ratio shall not exceed 55.
- Use is limited to pile group applications (not allowed for single pile supported structures).

- Use is confined to the Southeast Louisiana coastal area where soil conditions are comparable to those encountered at the test sites addressed in the report "Spiral Welded Pipe Piles for Coastal Structures" and cyclic loadings are not considered.

- The weld reinforcement (Bead Height) shall not be greater than 3/16 inch.

- The latest COE specifications are adhered to that include NDT and fabrication tolerances. SWP fabricated "only" in accordance with ASTM A 252 are not permitted.

Timber piles are **not** allowed in the design of hurricane flood protection structures where either tension or unbalanced loads exist.

To avoid the use of combining factored loads with actual service loads, the actual unfactored service loads shall be used when designing any pile foundation. See paragraphs 5.7 and 5.9 for further details on required Factors of Safety and overstress conditions.

When using pile analysis software, such as CPGA or Group 7, the unfactored soil properties shall be input, with the exception of the Subgrade Modulus (E_s) which may be reduced for group effects, if applicable.

Reductions for pile spacing and unstable soil wedges are included in Section 3.4.3.

For T-wall foundations, the designer may utilize either a pile stiffness based computer program, such as CPGA, or a computer program that models the nonlinear response of the soil, such as Group 7 (Ensoft, Inc).

CPGA is a simplified program for pile group analysis that accounts for the effects of pile locations and batters. It can represent linearly any type of pile-soil interaction and can represent either fixed or pinned interaction between the pile and the pile cap. The program does not account for the effects of pile cap flexibility, i.e. the pile cap is assumed rigid. The program does not account for the effects of non linear soil behavior.

Group 7 is also a program for analyzing the behavior of piles arranged in a group. Piles may be vertical or on a batter with the pile heads fixed, pinned or elastically restrained by the pile cap. The pile cap may settle, translate and/or rotate and is assumed to act as a rigid body. The program generates internally the nonlinear response of the soil and of each pile under combined loadings and assures compatibility of geometry and equilibrium of forces between the applied external loads and the reactions of each pile head. The program can internally compute the deflection, bending moment, shear, and soil resistance as a function of depth for each pile. For closely spaced piles, the pile-soil-pile interaction can be taken into account by using reduction factors for each single pile.

When both analysis types are used, such as required when unbalanced loads are present, the more conservative pile tip elevation shall govern the final design.

The designer should use the referenced software. Other software may be suitable for the pile analysis; however, a formal request with all supporting documentation on the proposed software shall be submitted to the USACE for review and approval prior to proceeding with the design analysis.

Global stability in the form of unbalanced loads, and settlement effects must be considered in the design of pile foundations. The unbalanced load (UBL) is resisted by the bearing piles. The calculation of the UBL is described in Section 3.4.3. The design preference is to eliminate the UBL with stability berms and eliminate the effects of settlement with advance preloads.

Additional flexural stresses are induced by settlement of soil above the piles. Vertical settlement induces a load normal to the longitudinal axis of the pile. Preloading the foundation to eliminate excess settlement should be first course of action when possible. Consolidation time can be significantly reduced with the inclusion of wick drains. When settlement is not eliminated, bending stresses shall be calculated in accordance with the L-Pile Method as prepared by the COE and VA Tech, and included in Chapter 3 of this Design Guidance. Settlement induced stresses are residual and shall be included in all load cases. A normal operating case must be included from which long term settlement is calculated. These settlement induced stresses are added as a separate component of the interaction equation for combined axial and bending stresses. Allowable stresses for load cases that include the UBL are listed in Tables 5.2 (a & b). The settlement induced stress component of the interactive equation shall be included as a separate factor as “fbd/Fbd”. Combined allowable stresses for Load Cases that include settlement induced bending. The interactive equation is as follows:

$$(fa / Fah) \pm (fb / Fbh) + (fbd / Fbd) \leq 1.0$$

Fah - allowable axial stress (hurricane loading)

Fbh - allowable bending stress (hurricane loading)

Fbd - allowable bending stress (settlement induced bending)

Notes:

a. Piles are considered laterally supported throughout the embedded length of pile regardless of the presence of settlement and unbalanced loads.

b. The pile design sectional properties shall **not** consider the sacrificial steel added to combat corrosion.

c. Referencing Table 5.2 (b) for Service Load factors, settlement overstresses for Fbd are as follows:

BLC I and II – settlement effects not considered in Construction Cases

NORMAL OPERATING – 17% (Long term case after construction)
BLC III and VII – 17%

BLC IV, V, VI, VIII, IX and DRC I – 40%

All other Design Resiliency Checks (DRC) shall use the Load Case overstresses listed in Table 5.2 (b).

Prestressed Concrete Piles are **NOT** recommended for use where settlement is significant. In existing monoliths that include prestressed concrete piles the allowable Fbd factor can be determined by utilizing the overstress factors listed above or use increased allowables as follows:

NORMAL OPERATING, BLC III and VII

Fc = $0.45\, f'c - fpe$ (compression)
Ft = $3\sqrt{f'c}$ (tension)

BLC IV, V, VI, VIII, IX

Fc = $0.60\, f'c - fpe$ (compression)
Ft = $6\sqrt{f'c}$ (tension)

All other DRC cases

Fc = $0.85\, f'c - fpe$ (compression)
Ft = $6\sqrt{f'c}$ (tension)

Example: LC V – (100 yr) SWL + Wave

HSDRRS - Pile OS allowable - 33%, Table 5.2 (a)
Fbd OS – 40%

Interaction equation:

$fa / (Fah)1.33 + fb /(Fbh)1.33 + fb /(Fbd)1.40 \leq 1.0$

EM 1110-2-2906, Design of Pile Foundations, provides specific guidance on pile stresses. Size selection for a particular hammer must consider the pile's anticipated driving resistance, ultimate capacity, pile stresses expected during driving, and pile set-up. Final equipment approval will be based on a review of the pile stresses, produced in

a Wave Equation Analysis, that is required to be performed by the contractor. The hammer type and size used for production should always match that used in the test program. Diesel hammers shall "not" be allowed for driving precast prestressed piling.

Maximum Driving Stresses as determined by PDA or Wave Equation Analysis shall not exceed:

Steel Piles	-	0.85 fy
Prestressed Concrete	-	0.85 $f'c$ - fpe (compression)
	-	$3\sqrt{f'c}$ + fpe (tension)

Limiting penetration rates are generally established by the Government based upon the results of a Wave Equation Analysis. Typically the following maximum blow counts apply. Timber (3-4 blows per inch), Concrete (10 blows per inch), Steel Pipe (10 - 20 blows per inch), Steel H (10 - 20 blows per inch).

Unless considered in the pile load test, the increased friction capacity due to the added length of a battered pile versus the vertical component shall be ignored.

Piles battered at a slope steeper than 1H on 8V shall be analyzed as vertical piles.

Weight of piles may be neglected in pile design.

Pre-stressed Concrete Piles shall have a strand pattern that is symmetric about both axes or placed in an evenly distributed pattern.

Maximum structural foundation deflections at top of pile (Basic Load Cases, Excluding Settlement):

Normal case, no overstress allowed
- Vertical – 0.50" or less
- Horizontal – 0.75" or less

Case with 16⅔ % overstress allowed (Construction)
- Vertical – 0.583" or less
- Horizontal – 0.875" or less

Case with 33⅓ % overstress allowed (Wind, wave and impact)
- Vertical – 0.67" or less
- Horizontal – 1.0" or less

These vertical and horizontal displacements are those normally generated from the short and long term load cases indicated. Adherence to these values typically ensures proper operation and integrity of hydraulic type structures.

Larger deflections may be allowed for "Design Resiliency Checks" and load cases involving boat / barge impacts if stresses in the structure and piles are not excessive. Larger deflections are limited to values that remain in the elastic state of the soil.

The design process requires consideration of water-tightness and potential differential movements between monoliths and at tie-ins. Water-tightness and differential movements shall be accounted for in details such as waterstops and sheet pile connections. Standard details that address these issues are provided in the Typical Drawings.

The lateral behavior of the foundation is sensitive to pile fixity. A minimum pile embedment of 9" is required. The connection may be assumed to be pinned if the embedment is between 9" and 12". A pile embedment length equal to or greater than twice the pile depth or diameter is required to develop full fixity for a pile embedded in the base of the structure. Should a fixed condition be assumed, the full effective depth of the moment resisting foundation base slab shall be reinforced. If tremie concrete is used to provide composite action it shall be reinforced. All reinforcement shall be designed in accordance with EM 1110-2-2104 (Strength Design for Reinforced – Concrete Hydraulic Structures). This reinforcement criteria shall be met regardless of the stress levels in the base slab.

Any embedment depth between these two options must be researched to determine the applicable connection. CERL Technical Report M-339, dated Feb 1984 and entitled "Fixity of Members Embedded in Concrete," is a recommended information source. The embedded portion of a pile consists of the solid concrete or steel section and does not included the tension hooks, see Figure 5.2.

The moment from the piles transferred into the base slab must be considered when designing the concrete reinforcement. Care must be taken to ensure proper moment orientation. A pile moment which is beneficial to the design shall be neglected.

5.2.2.2 Pile Tension Connectors

Pre-stressed Concrete. Pre-stressed concrete pile tension capacity is limited to the development length of the rebar and strand at the top of pile. Development lengths and hooks shall comply with the applicable provisions of ACI 318, Chapter 12. All potential failure modes listed in ACI 318-08, Appendix D, should be checked for concrete pullout capacity.

Steel H and Pipe. Pile tension connectors shall meet the requirements of ASTM A 706, deformed rebar for any open-ended tension hooks. Smooth round bar meeting the requirements of ASTM A 572 or flat bar meeting the requirements of ASTM A 572 will be allowed in closed-loop applications where the bars are connected to both sides of the foundation pile flanges. A joint specific Procedure Qualification Record, Welding Procedure Specification, and the Welder Qualifications shall be submitted for all types of welds used. 100% of all welds shall be visually inspected and 25% of all welds shall be tested using the appropriate non-destructive testing required for the weld type used per

the requirements of AWS D1.4 for rebar/round bar and AWS D1.1 for flat bar. Rebar shall be welded to the plate using double-flare-bevel-groove welds using an indirect butt joint procedure.

AWS D1.4/D1.4M:2005

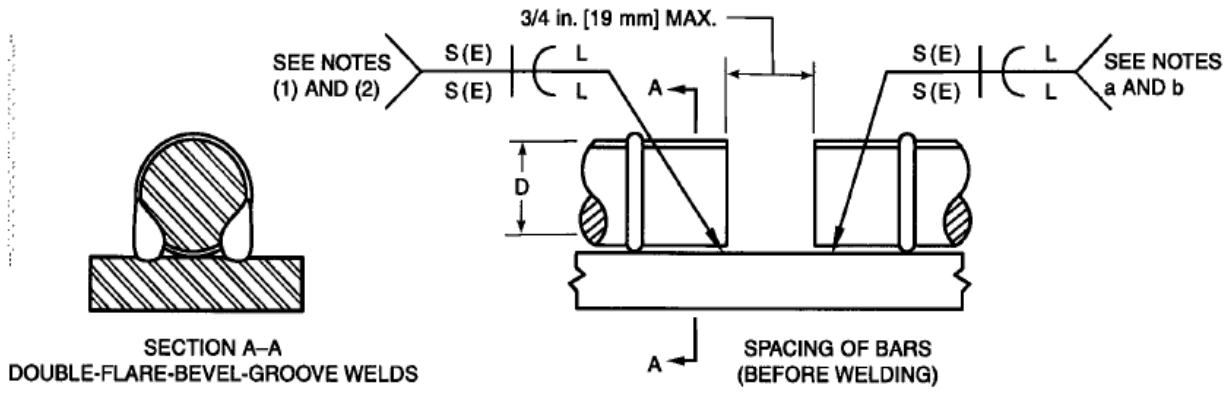

(A) INDIRECT BUTT JOINT WITH A SPLICE PLATE

The maximum load from CPGA analysis (load case with appropriate allowable overstress factor applied, if applicable) will be used in all design checks.

The following failure modes shall be investigated for all tension connector hooks.

- Check allowable stress in each anchor bar using AISC 9th edition, ASD criteria (Chapter D, Specification and Commentary). The allowable stress should be reduced by 5/6 of the computed capacity. For deformed rebar, the development length shall be checked using the requirements of ACI-318.

- Design the weld connecting the plate to the flange of the foundation pile using AISC J2 (5-67) criteria. The shear resistance of the weld should be reduced by 5/6 of the computed capacity.

- Design the weld connecting the hooks to the plate using AISC J2 (5-67) criteria. The shear resistance of the weld should be reduced by 5/6 of the computed capacity.

- Check plate shear using AISC F4 (5-49) criteria. The shear resistance of the plate should be reduced by 5/6 of the computed capacity.

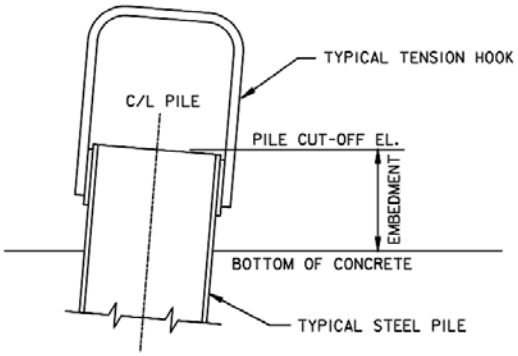

Figure 5.2 Depth of pile embedment

- Check capacity of foundation pile flange using AISC J4 (5-77) criteria. The shear resistance of the flange should be reduced by 5/6 of the computed capacity.

  - Check shear in the flange based on yielding and rupture.
  - Check block shear between plate welds.
  - Check block shear from far fillet weld to edge of flange.

- All potential failure modes listed in ACI 318-08, Appendix D, should be checked for concrete pullout capacity.

All tension piles, regardless of load case or magnitude, shall have tension connectors. Tension connectors are not required on compression piles unless any load case for a particular pile induces a compressive load of 10 kips of compression or less. To assure resiliency, a minimum of 2 pile rows shall have tension connectors.

5.2.2.3 Pile Splices.

Pre-stressed Concrete – Pre-stressed concrete piles shall be delivered to the site full length, pile splices are not allowed.

Steel Piles –

- Generally, splices shall be located in the middle 1/3 of the pile. To avoid soil disturbance, splices in the lower 20 ft. of the pile shall **not** be permitted. Splices outside the middle 1/3 of the pile will be permitted on a case-by-case basis, particularly where overhead obstructions demand an increase in splicing. In these limited cases, the standard full penetration weld with cover plates shall be used; commercial splices shall **not** be allowed. Additionally, 100% of the weld length shall be non-destructively tested using both VT and UT.

- Driving stresses must be checked with a Wave (WEAP) analysis for the type of hammer and soil profile or from pile load test PDA results.
  Maximum Driving Stresses – Compression or Tension shall be less than 0.85 Fy.

Commercial Steel Splices –

- The Champion H-pile Splicer HP-3000, with minimum plates of 3/8 inch and material steel grade of GR50 yield, or equal, is an approved H-Pile splice alternative. The Manufacturer must provide test data for the Splicer (x-x) bending capacity along with material mill certificates.

- Welding and Testing Requirements:

  Flanges - shall be 100% Complete Joint Penetration (CJP) single bevel weld.

  Web – 5/16 minimum fillet weld for the splicer to H-Pile. Minimum weld length shall be 2 ½ inches on each splicer flange to HP flange and then down the flange and across the entire H-pile web (HP14x73 and HP14x89), but not less than the manufacturers recommendations. The splicer web fillet weld (size) shall develop the axial tension equivalent to Fa = 0.5Fy X Pile web area (net).

  Provide WPS for each weld type.

  Testing shall be 100 % visual testing of fillet welds and 25% UT for the flange welds.

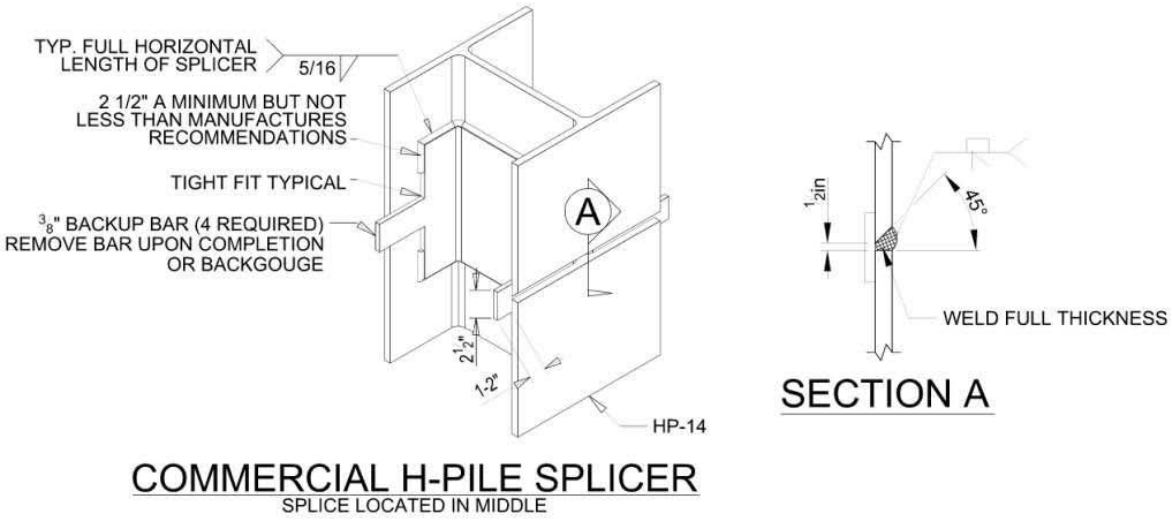

COMMERCIAL H-PILE SPLICER
SPLICE LOCATED IN MIDDLE

5.2.2.4 Pile Handling

Handling holes are permitted in H-piles subject to the following criteria:

- A Request for Information (RFI) shall be required from Construction Division.
- Holes are prohibited when driving stresses exceed 85% Fy.
- Burning of holes shall not permitted, all holes must be drilled. Holes shall not exceed 1-1/2" in diameter.
- Holes shall be located below the upper 1/3 of the pile. At this location plug welding of holes is not required.
- Upon approval of the "Designer of Record", holes may be permitted in the upper 1/3 of the pile but shall be plug welded. The plug weld will include a 3/8 inch backing plate welded to the interior face of the flange. Coating touch up will be required where applicable.
- Typically, when the unbraced length of H-piling exceeds 80 ft., the pile self weight alone may cause the pile to become overstressed during lifting and therefore should be checked. An overstress of 50% is permitted for this short term loading condition.

5.2.3 T-wall Sheet Piling Section

The primary purpose of the steel sheet piling is a pile acting to control seepage. Piping and Seepage Analysis methods are described in Section 3.4.2.5.

A minimum PZ-22 hot rolled sheet piling shall be utilized for seepage cut-off.

The sheet pile shall be adequately anchored into the base slab to resist pull out. This is particularly important when downdrag is present. This can be achieved by passing U-bars through existing handling holes or burning holes in the sheet pile, if necessary.

5.2.4 L-wall Sheet Piling Section

The steel sheet piling is a pile acting to control seepage and provide support to the structure.

The sheet pile shall be designed to take the tension loads resulting from an inverted T-Wall analysis (CPGA) for the listed loading conditions. In addition, the sheet pile shall be designed as a compression member for the dead load case.

The minimum sheet piling section shall be a hot rolled PZ–27.

Due to the embedment of the sheet pile, approximately 2.75 to 3.0 feet into the base slab, the sheet pile should be assumed to be a fixed pile in the CPGA program.

The sheet pile properties should be assumed to be the summation of the pile properties for the kicker pile spacing.

The sheet pile shall be adequately anchored into the base slab to resist tension loads. This can be achieved by the use of welded studs or welded tension connectors.

5.2.5 Sheet Piling Tip Penetration

See the Geotechnical Section of this document for sheet pile tip penetration requirements for T-walls & L-walls.

5.3 I-wall Design Criteria

5.3.1 Loading Conditions

(1) Load Cases. See Section “5.7 General Load Case Tables.”

(2) Impact Cases. See Section “5.9 Boat/Barge Impact Loading Tables & Maps.”

5.3.2 I-wall Sheet Piling Section

The steel sheet piling is a pile acting to control seepage and provide support to the structure.

Design the steel sheet piling using the moments and shears developed by the factored soil properties in the geotechnical design for tip penetration.

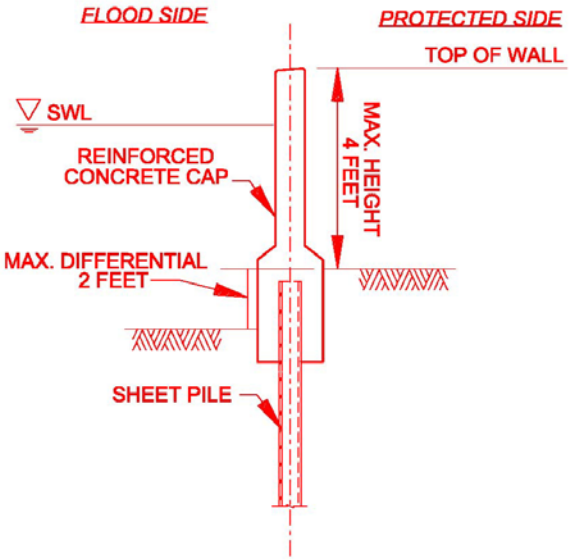

Figure 5.3 Typical I-wall Configuration

The minimum sheet piling type shall be hot rolled PZ–27. However, I-walls **within** the levee tie-ins may have as a minimum a hot rolled PZ-22.

The sheet pile shall be adequately anchored into the concrete stem to resist pull out. A minimum embedment of 2’-9” shall be used on PZ-35 or smaller sheet pile. Bond development shall be checked for larger sheets. The projected area of the sheet piling shall be sufficiently embedded to develop bond between the piling and concrete cap adequate to resist the moment couple force. Additionally, U-bars shall be passed through existing handling holes or by burning holes in the sheet pile.

I-wall sheet pile shall be designed such that settlement is limited to an acceptable amount and differential settlement is negligible. Settlement of the cap should be less than 6 inches. Deviations shall be approved in advance by the USACE engineer of record. Concrete capping of walls shall be delayed in levees with anticipated settlement until movement has subsided. In the interim, the sheet piling shall be extended to the project Design Grade.

I-walls have been limited to 4 ft. of stick-up. This limitation negates the need to address horizontal displacements except as required for tension cracks addressed in the Geotechnical Section 3.

5.3.3 I-wall Sheet Piling Tip Penetration

See the Geotechnical Section of this document for sheet pile tip penetration requirements for I-walls.

5.3.4 Reinforced Concrete Section

It is recommended that all I-walls shall be at least 2 ft. thick. There shall be a minimum 6" of concrete clear cover beyond the sheet piling section.

5.4 Temporary Retaining Structure (TRS) Design Criteria

A TRS is used for braced excavation construction purposes. The TRS design is the responsibility of the contractor but shall be submitted for approval. Where applicable, construction live loads shall be considered in the TRS design; a common minimum is 200 pounds per square foot. Actual equipment loads shall be verified and used. For braced excavations constructed in water, only hot-rolled piling shall be permitted. Boat impact shall be applied where applicable unless protective marine fenders are included in the TRS design.

5.4.1 General Notes (Flood Protection)

TRS walls that serve as interim flood protection must comply with interim design guidelines dated 20 April 2006 and supplemented with Phase 1 design criteria dated 7 Feb 2007.

Areas below the required flood protection elevation will be considered breaches in the protection. Contractors will be permitted to allow an area in the existing flood protection to fall below the required elevation provided that area can be closed with steel sheet piling in a maximum of forty-eight (48) continuous hours. The length of the breech shall not exceed 300'. The interim protection shall be built to the lesser of the height of the adjacent levee/floodwalls or the 100 year (2011) Still Water Level (mean surge).

The sheet pile materials for closing such breaches shall be stockpiled at the site. Plans for closing breaches in the floodwall shall be updated periodically to reflect the status of construction progress.

The Contractor shall develop and submit for approval, plans, including methods, equipment, materials and actions to close breaches in the event that an impending storm or high water event threatens the area. Prior to removing any existing flood protection, the Contractor shall have the plan of interim protection approved.

The option or requirement to flood an excavation during a potential flood event may be used.

5.4.2 Sheet Piling Section (for Non-Flood Protection)

Design the steel sheet piling, using the moments and shears obtained from the geotechnical design for tip penetration, with allowable steel stresses, $F_b = 0.65\ F_y$ and $F_v = 0.40\ F_y$.

If archweb "U" piles are used, then the design shall account for and include calculations for shear transfer across their interlocks. Arch web piles or piles with interlocks at or near their center of gravity tend to slip under loading when the shear transfer cannot be achieved across their interlocks. Arch web piles shall be designed in accordance with the recommendations set forth in the standard CUR 166 published in 1993 in Holland by the Center for Execution, Investigations and Standardization in Civil Engineering (CUR), available from New Orleans District, Corps of Engineers, ED-T. Anti-slipping connections such as welding or crimping of the interlocks can be employed to help prevent displacement of the interlocks. The design calculations shall include all assumptions and shall consider the type(s) of soil, the effects of water, type of wall (i.e. cantilevered versus braced and shall include the location and number of wales, struts, etc), whether the piles are driven singly, in pairs, triple, etc., effects of phased excavation, treatment of the interlocks (i.e. how shear transfer is accomplished through welding or crimping), references cited, and any other considerations.

5.4.3 General Notes (for Non-Flood Protection)

Design steel struts, tie rods and steel wales using the maximum forces obtained from the unfactored geotechnical design and the latest AISC industry standards.

Design the anchors and deadmen, using the maximum anchor forces obtained from the factored geotechnical design and the latest AISC and ACI industry standards.

5.4.4 References

- "Steel Sheet Piling Design Manual", United States Steel Corporation
- "Steel Sheet Pile Design Manual", Pile Buck Inc.
- "Engineering Manual for Sheet Pile Walls", Virginia Tech Department of Civil Engineering
- "Design of Sheet Pile Walls", USACE Engineering Manual EM 1110-2-2504
- "CUR 166", published in 1993 in Holland by the Center for Execution, Investigations and Standardization in Civil Engineering (CUR) ('Dammwandconstructies' Civieltechnisch Centrum Uitvoering Research en Regelgeving, Holland

5.5 Reinforced Concrete Design Criteria

5.5.1 Structural Concrete

f_c' = 4000 psi minimum – 28 day compressive strength (except concrete piles) or 90 days if pozzolans are used to replace cement. (3000 psi may be used for incidental structures or if heat control is required).

f_c' = 5000 psi minimum (prestressed concrete).

Thermal considerations: Slab and wall components that are greater than 4 feet thick shall require a thermal analysis. A simplified Level 1 analysis, as specified in ETL 1110-2-542 (dated 30 May 97), will suffice. A low-heat mix shall be included in the project specifications when analysis proves thermal stresses are elevated. A low-heat mix can be achieved by replacing the chirt aggregate with limestone; the larger the aggregate size the better. Additionally, replace the cement content with as much pozzalan as possible. Not all flyash and slags reduce heat. The most benefical are Class F flyash and Grade 120 ground granulated blast-furnace slag.

5.5.2 Steel Reinforcment

Steel reinforcing shall be ASTM A615 Gr. 60 with f_y = 60 ksi
(Designs utilizing f_y > 60 ksi are not allowed). Reinforcement shall comply to ASTM A706 when welding is required.

Steel reinforcing for prestress concrete shall be Grade 270 strands (270,000 psi).

5.5.3 Load Factors

Reinforced concrete hydraulic structures must follow Corps criteria (EM 1110-2-2104). EM 1110-2-2104 procedures are referenced to the load factors and strength reduction factors found in ACI 318-1999.

Single Load Factor of 1.7 for dead and live loads shall be used in addition to a Hydraulic Factor.

Hydraulic Factor of 1.3 shall be applied to both shear and moment. The hydraulic factor is used to improve crack control in hydraulic concrete structures by increasing reinforcement requirements, thus reducing steel stresses.

Hydraulic Factor of 1.65 shall be used for member in direct tension. This includes base slab sections which have a net tensile stress resulting from load and pile reactions.

Strength reduction factor for bending shall be 0.9

Strength reduction factor for shear shall be 0.85

In accordance with paragraph 3-3 of EM 1110-2-2104, the capacity needed to resist diagonal shear is as follows:

$$V_{uh} = V_u \cdot H_f = V_u \cdot 1.3$$

For Concrete Shear Strength only: $\Phi \cdot V_c \geq V_{uh}$

For Concrete with Stirrups: If $\Phi \cdot V_c \leq V_{uh}$ then $\Phi \cdot V_s \geq V_{uh} - 1.3 \cdot \Phi \cdot V_c$

V_u = ultimate factored shear force
V_{uh} = ultimate factored shear force for hydraulic structures
H_f = Hydraulic Factor
V_c = nominal shear strength provided by concrete
Φ = strength reduction factor
V_s = nominal shear strength provided by shear reinforcement

This effectively reduces the stirrup reinforcement load factor in comparison to unreinforced concrete. This same method is used in ACI 350, paragraph 9.2.8.3. The reasoning is that the H_f is added for durability. Increasing the concrete section reduces the cracking thus minimizing rebar exposure to corrosion. Once the concrete is cracked, the stirrups are exposed thus the load factors revert back to those used in ACI 318, excluding the H_f. MVN typically does not include this reduction and will accept designs that provide shear reinforcement as:

$$\Phi \cdot V_s \geq V_{uh} - \Phi \cdot V_c$$

5.5.4 Steel Requirements

Maximum Flexural Reinforcement

$0.25\ \rho_b$ (Recommended)

$0.375\ \rho_b$ (Permitted w/o special studies)

ρ_b = balanced steel ratio

Minimum Flexural Reinforcement

ACI Code

Temperature Reinforcement

$0.0028 A_g$ (1/2 in each face)

5.5.5 Concrete Requirements

Clear Cover (except for channel lining) (Also see Section 12.0 – Typical Drawings):

- 2” min. for concrete sections equal to or less than 12” in thickness.
- 3” min. for concrete sections greater than 12” and less than 24” in thickness.
- 4” min. for concrete sections equal to or greater than 24” in thickness and when concrete is placed directly in contact with the ground.

Minimum Wall Thickness:

- T-walls = 18” minimum (for impact loads less than 50 kips)
- T-walls = 24” minimum (for impact loads 50 kips or greater)
- L-walls and I-walls = the width of the sheet piling plus 12”

Tapered walls of varying thickness were developed to save in concrete volume. In the construction of these types of walls, it is much more labor intensive; therefore, if the depth of the wall varies less than 18 inches from top to bottom, the wall thickness should remain constant.

5.5.6 Lap Splices

See typical drawings and details in Section 12.0 for Lap Splice charts and notes.

Splices shall be staggered whenever possible. Otherwise, the ACI code shall be adhered to.

Mechanical Splices

1) Mechanical Connectors
2) Thermit Welding (Cadweld) (Only use when necessary)
3) Welding (Never to be used)

When using mechanical splicers, do not add the coupling device to a short bar (usually equal to the lap length) that in turn laps to a long length. This creates two lap splices at the same location. Lap splices should be held to a minimum. When staggered in accordance with Class A requirements, mechanical splices shall develop 1.25Fy of the rebar, when not staggered the splice shall provide 1.50Fy.

5.5.7 Prestress Concrete

Prestress structural concrete (except piles) shall be approved in advance by the USACE engineer of record.

Prestress concrete piles are permitted in foundations resisting an unbalanced load provided the leading pile can resist 100% of the combined stresses, including those from the unbalanced load.

The piles combined axial and bending allowables for all unbalanced load cases are increased to $F_C = 0.45 \cdot F_C'$ and $F_T = 3 \cdot \sqrt{F_C'}$; For all other loading cases, the allowables are $F_C = 0.40 \cdot F_C'$ and $F_T = 0$

5.5.8 General Notes

In a base slab where 3 or more pile rows are present, it is recommended that primary and secondary reinforcing steel be placed above piles when possible.

When primary steel is placed above embedded piles, temperature steel shall be placed in the thickness of concrete below the primary steel (typically 12 inches). The temperature steel requirement is based on the depth of concrete below the primary steel, not the total depth of concrete.

5.6 Miscellaneous

5.6.1 Material Unit Weights

MATERIAL	UNIT WT (lb/ft^3)
Water	(62.4 to 64.0)
Reinforced Concrete	150
Steel	490
Rip rap	132
Semi-Compacted Granular Fill	120
Fully-Compacted Granular Fill, Wet	120
Fully-Compacted Granular Fill, Effective	58
90% -Compacted Clay Fill, Wet	110
90% -Compacted Clay Fill, Effective	48

The unit weight of water shall be dependent on the salinity content at the project site.

The unit weights of soils are the minimum required based on many years of soil classification and testing in the region.

5.6.2 Loading Considerations

1) Concrete

- Unit weight of monolith
- Neglect weight of stabilization and tremie slab when beneficial to the foundation loading (i.e. uplift)

2) Water and Waves.

- SWL Elev. (Hydrostatic pressure)

- Wave Loading (exclude the water weight due to the wave weight above the SWL when designing the foundation)

- In designing the foundation for wave loading, the total resultant force, at its point of application, shall be utilized as provided by the hydraulic engineer.

- Due to the empirical nature of the formulas used in deriving the resultant wave force, it may not produce the same resultant if one was to use the derived pressure diagram. These differences are typically negligible; however, the design engineer shall use sound engineering judgment when applying these criteria. For a definition sketch of the GODA formulation for computing wave forces, see Figure 1.5 in Chapter 1.0 HYDRAULICS.

3) Soil

- Vertical - Use Unit Weight

- Horizontal - Use Unit Weight and K_o (at-rest lateral earth pressure coefficients)
  K_o = 0.8 for clay
  K_o = 0.5 for granular materials
  K_o = 0.5 for rip rap

4) Wind

- The wind load shall be computed in accordance with the following simplified formula, F = .00256 (V^2)(I)(A), where (V) is the minimum wind velocity, (I) an Importance Factor of 1.15, and (A) the gross area exposed to the wind. See paragraphs 5.2.1 and 5.7 for additional guidance.

- Minimum design wind pressure for hydraulic structures shall be 50 psf.

- Wind Load shall be combined with other load cases so that it produces the most unfavorable effect.

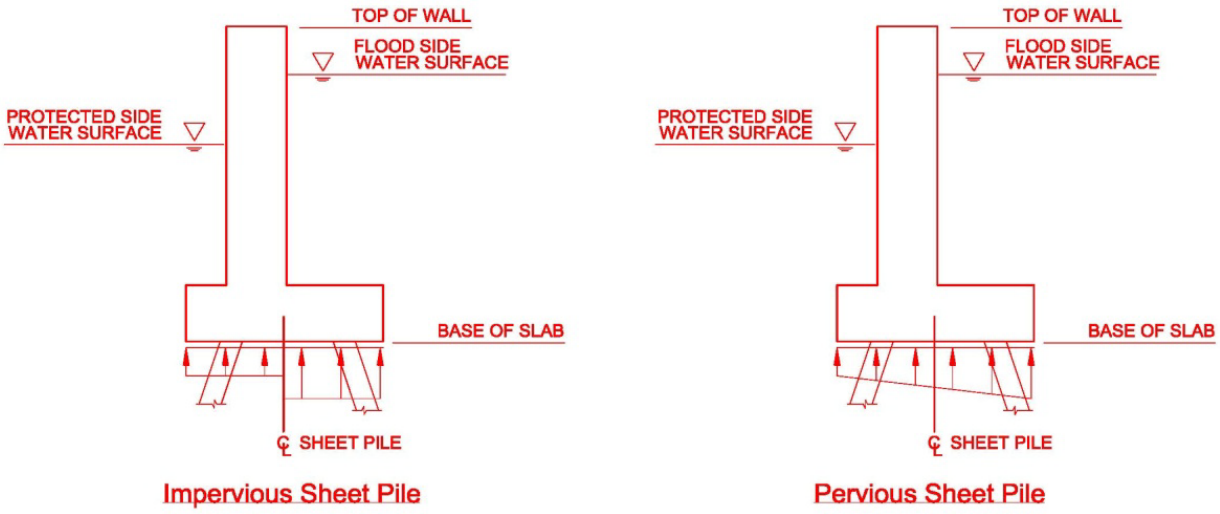

Examples of Uplift Cases.

5) Uplift

Uplift pressure is comprised of position pressure and seepage pressure. Position pressure is based on the hydrostatic head due to the difference in water elevation and the base of the structure. Seepage pressure is a function of the equipotential flowline caused by the difference in water elevation between flood side and protected side, including the effectiveness of the sheet pile cut-off.

- Impervious sheet pile cut-off, 100% effective
- Pervious sheet pile cut-off, slopes uniformly along base from flood side uplift at flood side edge of base to protected side uplift at protected side edge of base

5.6.3 Structural Steel Design

Minimum steel thickness = 5/16” (For gate skin plates, 1/16” of thickness is added for corrosion, the 5/16" total thickness represents a minimum design thickness of 1/4" + 1/16" sacrificial thickness for corrosion control.) See EM 110-2-2105, Design of Hydraulic Steel Structures, for additional guidance. The 5/16” minimum is applicable regardless of corrosion requirements and is applicable to both stainless steel and aluminum.

Allowable stress = 5/6 of AISC allowable stress

The ASD method shall be used. The LRFD design method may **not** be used for structural steel design.

The American Welding Society, AWS D1.5 (2002) code shall be used for fracture critical members.

Welded structures should be welded all around (seal welded). Welds shall be designed and not simply made full penetration as the cost and residual stresses imparted by unequal cooling are detrimental. Weld inspection and NDT shall be made part of the contract requirements.

5.6.4 Steel Sheet Pile Design

$F_b = 0.5\ f_y$
$F_v = 0.33\ f_y$
F_a = 5/6 AISC allowable

Non-flood protection TRS allowables can be found in Section 5.4.2.

Thickness = 0.375 in. minimum

Only hot-rolled steel sheet piling sections are allowed.

5.6.5 Gate Design

5.6.5.1 Concrete Monolith

For the foundation design of most of the gate monoliths in our flood protection system, standard practice for the pile layout is to use battered piles to resist the horizontal loads at the columns and use vertical piles to resist vehicular and railway loads in the center of the monolith. Engineering judgment shall be used to determine the zone of influence to resist the horizontal loads in respect to battered pile placement. Where unbalanced loads are present in the foundation design, battered piles may also be required in the center. Low unbalanced loads may also be transferred to the end walls where battered piles are concentrated.

5.6.5.2 Steel Gates

Gates 12 feet tall or less may utilize a two girder system. The gates are considered low head and need not comply with Fracture Critical Requirements. Girder splices are not recommended, but when approved the splice shall be NDT tested along 100% of the length. Stress levels and deflections shall limit the girder capacity. Stress levels about the major axis shall be kept below 0.5 Fy and combined stresses about both axis maintained below 90% of unity.

Gates taller than 12 ft. ≤ to 16 ft. may also utilize a two girder system, but must meet all fracture critical criteria for a hydraulic steel structure. Fracture critical requirements are specified in ER 1110-2-8157. Non-redundant tension members shall comply with AWS D1.5 and 100% of welded tension connections shall be NDT tested, including all plates and stiffeners welded to the tension flange of both girders. Splices in the critical horizontal girders are prohibited.

Gates taller than 16 ft. shall utilize three girders. At the hinge column, the third girder shall transfer the lateral load to the column through an additional hinge. For welded connections, AWS D1.1 is adequate; however, splices in the critical horizontal girders are prohibited.

Roller, swing or miter type floodgates, placed in "dry" conditions, subject to atmospheric surroundings, shall be painted with a vinyl paint system (V-766e). Floodgates, such as sluice type gates, placed in "wet" conditions, subject to tidal and/or splash zones shall be painted with a coal tar epoxy paint system (C 200a).

Roller Type Gates. Consideration should be given to the design of the gate in respect to rolling the gate into placement. New gates may be very large and will pose concerns when the gate is moved into position. Roller gates shall be used when the clearance requirements within the closure swing cannot be guaranteed. Typically , if the skin plate is placed on the flood side of the girders, gate uplift can become a issue. The location of the bottom seal is critical in reducing flotation. Flotation Factors of Safety shall comply with EM 1110-2-2100, Table 3-4.

Swing Type Gates. The use of three hinges or extension of columns and tension supports should be considered for gates that are very large in height. The top hinge tends to bind when moving gates that are very heavy. Adjustable bottom seals shall be added where slight variations in sill height could occur (i.e. road pavement topping improvements).

Overhead Roller Type Gates. The use of this type of gate shall be of last resort as it creates an overhead obstruction. If there are no problems with swing tolerances, then we recommend using a swing gate.

Miter Type Gates. The latching of the gates after placed into the closed position is very critical for the proper function of the miter gate. A latching system should be investigated if miter gates are being considered. The latch shall resist all applicable design hurricane protection design cases.

Sector Gates. Sector gates should be investigated for a full range of possible hydraulic and operational loads, as are typically determined by hydraulic analysis. Effects of "Reverse Head" loading should be included in the design, where applicable.

Sluice Gates. Cast iron is the preferred material for sluice gates used in hurricane flood protection projects; however, stainless steel may also be utilized. If stainless steel is used in the design of a sluice gate, the gates shall be furnished in one piece. All members of the gate shall have a minimum thickness of 5/16" (including wall embedments) and no intermittent welds shall be allowed. Depending on the type of stainless steel used, appropriate reductions in the yield stress of the base metal in the heat affected zone (HAZ) should be taken per AWS D1 and other applicable industry standards.

Slide Gates. Slide gates are typically used in light duty applications involving the control of channel flow and are not recommended for use in hurricane flood protection applications.

5.6.6 General Design Considerations

Where levees will be raised or new embankment constructed, the adverse effects of foundation consolidation must be considered which includes drag forces on both the sheet pile cut-off and support piles. In addition, these drag forces must be considered in settlement calculations.

Where non-displacement piles are required and corrosion is not a controlling factor, consider H-piles or pipe piles; otherwise, investigate the use of prestressed concrete piles which are typically more cost effective.

5.6.7 Utility Crossings

For a structural alternative on utility crossings, the utility shall only be allowed to pass through a pile founded L-Wall or T-Wall. Utilities should pass through a properly sealed pipe sleeve in the cut-off sheet piling. See Section 12.0 for typical examples and utility clearances.

On case-by-case bases, utilities may pass through the concrete wall and in general, shall not be attached, sleeves are mandatory. Only metal (steel or iron) sleeves and carrier pipes shall be permitted to penetrate the wall; no plastic or PVC. Shut off valves are required on all gravity flow pipelines and shall be placed on the protected side. See Section 12.0 for typical examples and utility clearances.

All Utility Crossings shall approved by the USACE engineer of record. See Section 3.6 for other utility crossing options and pipe support requirements.

5.6.8 Corrosion Protection

Steel pile lengths driven in undisturbed soils, where they are not exposed to air or moisture, or are located beneath the low water table stages, do not require corrosion protection, since the rate of corrosion decreases rapidly without the presence of oxygen.

Steel sheet, H and pipe piling that will be installed in new fill, disturbed materials, exposed to air or fluctuating water tables (splash zone), embedded in undisturbed but pervious coarse-grained soils above the low water table, or beneath slabs where soil subsidence can occur exposing the piling to air and moisture, shall be protected from corrosion using one of the following methods:

1. Painting with an approved coal tar epoxy system.

    - This is the preferred method and should be considered first unless there are cogent reasons for using the sacrificial thickness method below. The steel piling shall be painted 3 inches above the base slab and to a 5 ft. minimum below new fill material, disturbed soil or the lowest elevation of the fluctuating water table. Piles exposed in tidal zones and/or splash zones, such as steel piling in breakwaters or dolphins shall be coated the full length exposed to the tidal zone plus an additional 5 ft. of length. Only coal tar epoxy (C 200a) is approved for use at this time.

2. Addition of sacrificial thickness.

    a. Steel piling exposed to atmospheric conditions or new/disturbed soil.

    - In lieu of painting, a thicker piling section may be provided to accommodate the future loss of material due to corrosion.

    - Steel pile thicknesses shall be increased by a minimum of 0.075 inches, for piling driven into new fill or disturbed materials, which will not be exposed to air or moisture due to soil subsidence beneath the base slab.

    - Steel pile thicknesses shall be increased from 0.10 inches to 0.150 inches, for piling that will be exposed to air or moisture, due to soil subsidence beneath the base slab. The minimum 0.075 inches is acceptable when soil conditions are found by testing to be not conducive to corrosion. For more aggressive exposure conditions, steel pile thicknesses ranging from 0.150 inches to 0.300 inches may be more appropriate. In choosing the required sacrificial thickness, factors such as the position of the piling or base slab with respect to the water table, the presence of oxygen and moisture, salinity levels and stress levels shall be considered.

    b. Steel piling exposed to tidal conditions and/or splash zones.

    - In addition to painting, use of marine grade steel (ASTM A690) or a thicker piling section may be provided to accommodate the future loss of material due to corrosion in tidal and splash zones

- For piling exposed to freshwater, steel pile thicknesses shall be increased by a minimum 0.100 inches. If a concrete core is provided, the sacrificial thickness may be reduced to 0.050 inches.

- For piling exposed to brackish water (chlorides <2000 ppm), steel pile thicknesses shall be increased by a minimum of 0.150 inches. If a concrete core is provided, the sacrificial thickness may be reduced to 0.075 inches.

- For piling exposed to salt water (chlorides >2000 ppm), the increased pile thickness method is not allowed, marine grade steel is recommended along with the specified coal tar coating.

c. Typical H-piling Thicknesses

HP 14x73 (0.505 inches)
HP 14x89 (0.615 inches)
HP 14x102 (0.705 inches)
HP 14x117 (0.805 inches)

d. Typical Pipe Piling Thicknesses

Typical wall thicknesses include (0.250", 0.375", 0.500" and 0.625")

e. Typical Sheet Piling Thicknesses

PZ 22 (0.375 inches)
PZ 27 (0.375 inches)
PZ 35 (0.500 inches)
PZC 14 (0.420 inches)
PZC 19 (0.420 inches)
PZC 28 (0.570 inches)

- Sheet piling used as seepage cut-off has no structural requirement. The minimum thickness after a 50 year design life shall not be less than 5/16 inch provided the section has sufficient shear capacity to meet any drag down requirements due to soil subsidence beneath the base slab.

3. Addition of cathodic protection.

- Although cathodic protection may be an effective method of corrosion control, it is not recommended for use as the primary corrosion inhibitor in floodwall applications. It should be noted that these systems are only partially effective in tidal zones and offer no protection in the splash zone.

4. Soil testing and salinity levels.

    - Corrosion rates shall be derived from existing steel structures located in the same vicinity and exposed to a similar environment. In the absence of historical corrosion data, soil testing shall be performed to determine the level of the corrosive properties of the soil. Common corrosion indicators are salinity, and resistivity. Typically, greater sacrificial thicknesses are required when soil salinity levels (chlorides) exceed 2000 ppm and soil resistivity is less than 2000 ohm-cm. When testing is performed, salinity levels in soils shall be sampled at intervals not to exceed 1000 ft.

5.6.9 Levee Tie-ins, Transitions and Scour Protection

Typical scour protection details can be found in Appendix C.

ERDC Overtopping Protection can be found in Appendix D. It shall be used to determine whether the minimums set in Appendix C are adequate.

Proper engineering judgment and settlement considerations shall be used to determine the proper level of scour protection. Scour protection materials and details should be properly engineered and suitable for the specific site location. Scour protection on the flood side should be considered on a case-by-case basis, especially if hurricane wave loading exists.

95% compaction of the scour protection sub-base shall be considered to minimize settlement. The structural backfill shall be fully compacted, fertilized and seeded where concrete armor is not applied.

Scour protection is required on the protected side of all I-walls and L-Walls. Scour protection is also required on the protected side of T-walls that include a stability berm. Scour protection shall transition a minimum of 10’ into any adjacent T-wall sections then curve inward at a radius equal to that of the protection width.

Proper earthen cover and scour protection are mandatory. Future settlement should be accounted for in detailing scour protection over the sheeting piling.

Typical MVN details should be used for transitions from L-Wall or T-wall to T-wall, L-Wall or T-wall to I-wall and L-Wall or T-wall to uncapped sheet piling (slip joint). See Section 12.0 for typical drawings.

The tie-in details for T-Walls, L-Walls and I-walls that terminate into a levee section must follow the latest guidance. As a minimum, the uncapped cut-off sheet piling must extend horizontally 30 feet into the full levee section for erosion and seepage control. In order to avoid seepage problems, the sheet pile tip elevations shall remain at the same tip elevation as the adjacent walls, unless seepage calculations determine that a lesser tip elevation is adequate. Seepage analysis shall be performed by either the Harr, Line-of Creep Methods, or flownets.

A minimum hot rolled PZ-22 or equivalent shall be used at all levee tie-ins.

5.6.10 Expansion Joints.

To prevent concrete from crushing from movement caused by expansion, expansion joints are placed between abutting concrete monoliths. Typically L-wall or T-wall monoliths should be 40 to 60 feet in length between expansion joints, where I-walls are typically 30 to 40 feet. At these lengths, a 1/2 inch joint should be adequate for expansion. Expansion joints are also placed to isolate structural elements from each other such as concrete slope pavement. Expansion joints shall be made the full depth of the concrete. Dowels may be used across expansion joints to resist undesirable lateral or vertical movement of concrete elements where necessary. For additional guidance, see EM 1110-2-2102, Waterstops and Other Preformed Joint Materials for Civil Works Structures.

5.6.11 Waterstops.

Waterstops are primarily embedded in the monolith joints of hydraulic concrete structures such as floodwalls and control structures, to stop the passage of water through the joint. Waterstops shall be nonmetallic. Nonmetallic waterstops are manufactured in a variety of shapes; however, a 9 inch, 3 bulb PVC waterstop is typically used in the joints for floodwalls. The center bulb shall be hollow which allows for a wider range of movement in both the tranverse and lateral directions. For additional guidance, see EM 1110-2-2102, Waterstops and Other Preformed Joint Materials for Civil Works Structures.

5.7 Basic Load Case Tables

Loadings covered by the following table represent those typically encountered during construction and hurricane storm events. Fire, blasts and other similar accidental loadings are considered extreme loads not directly associated with hurricane events and as such are not included. However, designers should consult the designer of record for guidance on the applicability of these extreme loadings to a given structure based on its criticality to the system and its exposure/vulnerability to such loadings. In most cases, conventional methods such as increased safety and/or security measures of critical components can be implemented more feasibly than adjusting designs for the increased loading. It is important to note that these tables are not inclusive of all possible load case combinations. The designer of record shall assess and document any additional load cases in the Design Documentation Report (DDR).

Table 5.1 Typical Basic Load Case Table

LC No.	Overstress Allowed		Load Case Name	Description
	Struc.	Fndn.		
BLC 1a	16⅔ %	16⅔ %	Construction	Dead load 200 psf equipment surcharge No uplift No wind
BLC 1b	33⅓ %	33⅓ %	Construction plus Wind	Dead load No unbalanced load No uplift Wind from protected side
BLC 2a	0	0	Water to SWL (Impervious)	Dead load Unbalanced load (if present) Impervious sheet pile cut-off No wind[2] No boat/barge impact
BLC 2b	0	0	Water to SWL (Pervious)	Dead load Unbalanced load (if present) Pervious sheet pile cut-off No wind[2] No boat/barge impact
BLC 2c	33⅓%	33⅓%	Water to SWL, plus Wind, (Impervious)	Dead load Unbalanced load (if present) Impervious sheet pile cut-off Wind load
BLC 2d	33⅓%	33⅓%	Water to SWL, plus Wind, (Pervious)	Dead load Unbalanced load (if present) Pervious sheet pile cut-off Wind load
BLC 3a	33⅓%	33⅓%	Water to SWL, plus Wave Load (Impervious)	Dead load Unbalanced load (if present) Impervious sheet pile cut-off No wind Wave load applied
BLC 3b	33⅓%	33⅓%	Water at SWL plus Wave Load (Pervious)	Dead load Unbalanced load (if present) Impervious sheet pile cut-off No wind Wave load applied

LC No.	Overstress Allowed		Load Case Name	Description
	Struc.	Fndn.		
BLC 4a	50%	33⅓%	Water to SWL plus Wind Load plus Unusual Barge Impact (Impervious)	Dead load Unbalanced load (if present) Impervious sheet pile cut-off Wind load applied See “Boat/Barge Impact Loading Tables & Maps”
BLC 4b	50%	33⅓%	Water to SWL, plus Wind Load, plus Unusual Barge Impact (Pervious)	Dead load Unbalanced load (if present) Pervious sheet pile cut-off Wind load applied See “Boat/Barge Impact Loading Tables & Maps”
BLC 5a	0%	0%	Water to Reverse Head, (Pervious or Impervious)	Dead load Unbalanced load (if present) Pervious or Impervious sheet pile cut-off No boat/barge impact
BLC 5b	33⅓%	33⅓%	Water to Reverse Head, plus Wind (Pervious or Impervious)	Dead load Unbalanced load (if present) Pervious or Impervious sheet pile cut-off No boat/barge impact Wind load
DRC A	33⅓%	33⅓%	Water to Top of Wall (IA) or 500 YR SWL Plus Wave (IB)(Pervious or Impervious)	Dead load No unbalanced load Pervious or impervious sheet pile cut-off No wave load No wind load No boat/barge impact load
DRC B	50%	50%	Water to Top of Wall (IA) or 500 YR SWL Plus Wave (IB)Pervious or Impervious)	Dead load With unbalanced load Pervious or impervious sheet pile cut-off No wave load No wind load No boat/barge impact load

LC No.	Overstress Allowed		Load Case Name	Description
	Struc.	Fndn.		
DRC C (Zone IA)	Note 4.	Note 4.	EXTREME - Case I Barge Impact, plus hydrostatic loading to SWL, plus wind, (Impervious)	Dead load Unbalanced load (if present) Impervious sheet pile cut-off No wave load Wind load See "Boat/Barge Impact Loading Tables & Maps"
DRC D (Zone IA)	Note 4.	Note 4.	EXTREME – Case II Barge Impact, plus hydrostatic load to SWL, plus wave, plus wind, (Pervious)	Dead load Unbalanced load (if present) Pervious sheet pile cut-off Wave load Wind load See "Boat/Barge Impact Loading Tables & Maps"

NOTES:

1. In cases where a dolphin or other structure will resist barge impact, only the minimum debris impact load of 0.5 kips per foot shall be applied to the wall design.

2. If wind load is applied, a 33⅓% overstress is allowed for SWL and RH cases.

3. In designing the pile foundation, the vessel impact load shall be located in the center of the monolith. Under this concentric loading, stress levels shall comply with Tables 5.1 and 5.2. As a design resiliency check, the foundation shall be analyzed with the vessel impact occurring 5 ft. from the vertical monolith joint. On unsymmetrical monoliths, the loading shall be checked at both monolith joints. Under this extreme load case condition, the factor of safety shall be equal to or greater than unit.

4. For applicable LRFD load factor combinations see Table 5.2.

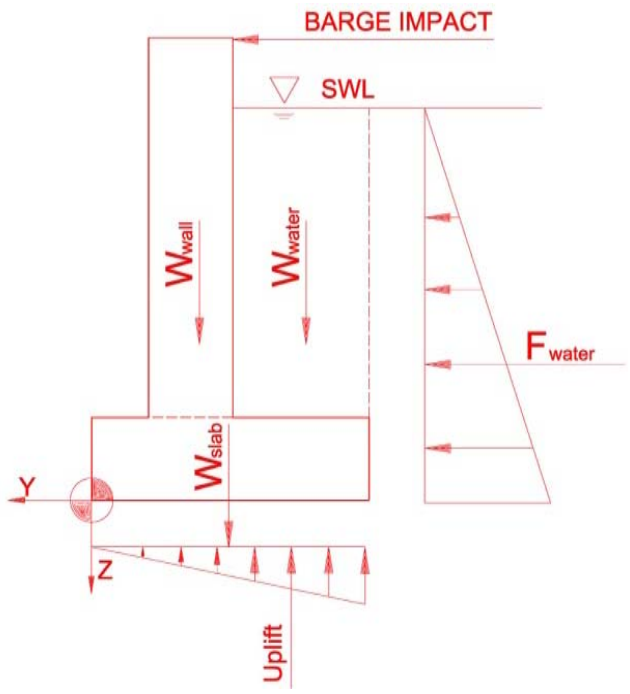

TYPICAL LOADING – BASIC LOAD CASE 4b
(No Unbalanced Load)

5.8 Impact Barriers (Dolphins, Pile Clusters, etc.)

Floodwalls, of any type, should be avoided along major navigation routes. Where unavoidable, the floodwall shall be designed using the appropriate load conditions included in this document. Where floodwalls cannot be designed, for the required design load, impact barriers such as sheet pile dolphins or pile clusters, shall be constructed in front of the floodwall to provide protection.

Impact barriers shall be stand alone structures whose sole function is to provide protection from impact, with no capacity to transfer load to adjacent structures. The minimum top of impact barrier shall be constructed to the greater of:

- 7 ft. above the 100-yr SWL
- The Top of Structure based on the 1 % wave overtopping (excluding Structural Superiority). Where the protected structure Top of Wall (TOW) exceeds the 500-yr SWL. The impact barrier shall be constructed no higher than 7ft. above the 500-yr SWL.

Earthen impact barriers may be used, but shall be constructed to the Still Water Level, at a minimum when located in Zone 1A.

Impact Barrier - Design load Cases:

a. USUAL. A minimum 100 kip will be applied at the top of the barrier. No overstress is permitted. The water stage shall be the mean annual high water level. Impact shall occur at the lower of one foot below the dolphin, or 7 ft. above the mean annual stage.

b. UNUSUAL. A 160 kip impact force shall be applied at the lower of one foot below the top of the impact barrier, or 7 ft. above the SWL. This load case shall include the force of the wind on the exposed portion of the impact barrier above the SWL. The wind load, to be used in conjunction with the impact analysis, shall be computed in accordance with the following simplified formula, $F = .00256 (V^2)(I)(A)$, where the minimum wind velocity (V) shall be 140 mph, utilizing an Importance Factor (I) of 1.15, applied to the gross exposed area (A). The permitted pile capacity Factors of Safety and structural component overstresses are provided in Table 5.2 (a).

c. EXTREME. A 300 kip impact force shall be applied at the top of the impact barrier. The load case shall include the force of the wind on the exposed portion of the dolphin above the SWL. The wind load, to be used in conjunction with the boat impact analysis, shall be computed in accordance with the following simplified formula, $F = .00256 (V^2)(I)(A)$, where the minimum wind velocity (V) shall be 160 mph, utilizing an Importance Factor (I) of 1.15, applied to the gross exposed area (A). The permitted pile capacity Factors of Safety and structural component overstresses are provided in Table 5.2 (a).

The impact barrier capacity shall be based on a push-over analysis. In lieu of a push-over analysis, capacity can be determined by an elastic analysis of all structural components and limiting the pile capacity Factor of Safety and structural components Load Factors to those designated in Table 5.2 (b) An example of the push-over analysis is attached as an Appendix.

Where floodwalls are protected by significant structures such as pile founded wharves and warehouses or significant tree lines, impact barriers will not be required. An inspection report of the facility or site, to determine its integrity, shall be submitted along with a waiver request to the Chief of Structures at Division (MVD) for approval. Any structure or tree line used as justification for not designing for impact shall be inspected on an annual basis.

5.9 Loading Tables & Impact Maps

Impact loads for barges, boats and debris shall be considered as shown in the following tables and maps.

The maps show the minimum impact load to be applied to wall designs along the various reaches. If the impact loads expected are higher than shown, research into the appropriate impact loading for the each design should be performed.

The barge impact load is considered to act concentrically on the structure. The foundation is checked for an eccentric load as stated in Note 3 of Table 5.1. There is sufficient lateral reinforcement to distribute the impact over the monoliths. Any impact that would occur immediately at the monolith joint would create localized concrete damage near the top of wall, as witnessed in Katrina, and not lead to catastrophic failure.

Table 5.2 (a)

HSDRRS – IMPACT BARRIER BASIC LOAD CASES (BLC)								
LOAD CASE	ALLOWABLE OVERSTRESS		PILE LOAD - FACTORS OF SAFETY (FOR Q-CASE)					
	STRUCTURE	FOUNDATION PILES	STATIC LOAD TEST		PDA LOAD TEST		NO LOAD TEST	
			C	T	C	T	C	T
I. BARGE IMPACT (USUAL)	0 %	0 %	2.00	2.00	2.50	3.00	3.00	3.00
II. BARGE IMPACT (UNUSUAL) + WIND	50 %	33⅓ %	1.50	1.50	1.90	2.25	2.25	2.25
III. BARGE IMPACT (EXTREME) + WIND	**	**	1.15	1.15	1.40	1.40	1.70	1.70

****** Both concrete and steel designs shall utilize the LRFD methods of analyses. The strength reduction factor Φ shall comply with ACI and AISC codes. The hydraulic factor (H_f) shall equal 1.0. The applicable load factor combination is:

EXTREME CASE = 1.0 (DL + WIND) + 1.0 (BARGE IMPACT)

Table 5.2 (b)

HSDRRS - BASIC LOAD CASES (BLC)								
LOAD CASE	ALLOWABLE OVERSTRESS		PILE LOAD - FACTORS OF SAFETY (FOR Q-CASE)					
	STRUCTURE & GATES	FOUNDATION PILES	STATIC LOAD TEST		PDA LOAD TEST		NO LOAD TEST	
			C	T	C	T	C	T
I. CONSTRUCTION	16⅔ %	16⅔ %	1.70	1.70	2.15	2.60	2.60	2.60
II. CONSTRUCTION + WIND	33⅓ %	33⅓ %	1.50	1.50	1.90	2.25	2.25	2.25
* III. STILL WATER LEVEL (SWL)	0	0	2.00	2.00	2.50	3.00	3.00	3.00
* IV. SWL + WIND	33⅓ %	33⅓ %	1.50	1.50	1.90	2.25	2.25	2.25
* V. SWL + WAVE	33⅓ %	33⅓ %	1.50	1.50	1.90	2.25	2.25	2.25
* VI. SWL + WIND + (UNUSUAL) BARGE, BOAT or DEBRIS IMPACT	50 %	33⅓ %	1.50	1.50	1.90	2.25	2.25	2.25
* VII. REVERSE HEAD (RH)	0	0	2.00	2.00	2.50	3.00	3.00	3.00
* VIII. RH + WIND	33⅓ %	33⅓ %	1.50	1.50	1.90	2.25	2.25	2.25
* IX. RH + WAVE	33⅓ %	33⅓ %	1.50	1.50	1.90	2.25	2.25	2.25
* X. RH + WIND + (UNUSUAL) BARGE, BOAT or DEBRIS) IMPACT	50 %	33⅓ %	1.50	1.50	1.90	2.25	2.25	2.25
* Note: If unbalanced load is present for SWL (100-yr) or RH load cases, it shall be included in all SWL load case combinations.								

HSDRRS - DESIGN RESILIENCY CHECKS (DRC)								
LOAD CASE	ALLOWABLE OVERSTRESS		PILE LOAD - FACTORS OF SAFETY (FOR Q-CASE)					
	STRUCTURE & GATES	FOUNDATION PILES	STATIC LOAD TEST		PDA LOAD TEST		NO LOAD TEST	
			C	T	C	T	C	T
I. WATER to TOW, W/O UNBALANCED LOAD + NO WAVE LOAD	33⅓ %	33⅓ %	1.50	1.50	1.90	2.25	2.25	2.25
II. WATER to TOW, W/ UNBALANCED LOAD + NO WAVE LOAD	50 %	50 %	1.33	1.33	1.67	2.00	2.00	2.00
III. SWL (500-yr) + WAVE LOAD, W/O UNBALANCED LOAD	50 %	50 %	1.33	1.33	1.67	2.00	2.00	2.00
IV. SWL (500-yr) + WAVE LOAD, W/ UNBALANCED LOAD	67 %	67 %	1.20	1.20	1.50	1.80	1.80	1.80
V. EXTREME – CASE I (Zone 1A) BARGE IMPACT + SWL (100-yr) + WIND	**	**	1.15	1.15	1.40	1.40	1.70	1.70
VI. EXTREME – CASE I (Zone 1B) BARGE IMPACT + SWL (500-yr) + WIND	**	**	1.15	1.15	1.40	1.40	1.70	1.70
VII. EXTREME – CASE II (Zone 1A & 1B) BARGE IMPACT + SWL (100-yr) + WAVE	**	**	1.15	1.15	1.40	1.40	1.70	1.70

NOTE: LC III and IV are applicable only where the SWL (500-yr) is below the TOW.

** Both reinforced concrete and structural steel designs shall utilize the LRFD methods of analyses. The strength reduction factor Φ shall comply with ACI and AISC codes. The hydraulic factor (H_f) shall equal 1.0. The applicable load factor combinations are:

Zone 1A

EXTREME - CASE I = 1.0 (DL + H_S + WIND) + 1.0 (BARGE IMPACT) H_S = (100-yr) SWL Hydrostatic Force

EXTREME - CASE II = 1.0 (DL + H_S + BARGE IMPACT) + 1.2 (WAVE) WAVE = (100-yr) Wave Force

Zone 1B

EXTREME - CASE I = 1.0 (DL + H_S + WIND) + 1.0 (BARGE IMPACT) H_S = (500-yr) SWL Hydrostatic Force

EXTREME - CASE II = 1.0 (DL + H_S + BARGE IMPACT) + 1.2(WAVE) WAVE = (100-yr) Wave Force

GENERAL NOTES:

1. Actual “unfactored” service loads shall be used in any pile analysis program.

2. An increase in allowable deflections will be allowed for overstress conditions. Sound engineering judgment shall be utilized in deciding the appropriate overstress. Deviation from deflections and overstress guidance shall be approved by the USACE engineer of record.

3. The Reverse Head load case is not a typical floodwall load case, but is typical for structures which contain sector or sluice type gates and/or are submerged.

4. Design Resiliency Checks (DRC) are not typical HSDRRS design load cases. These cases, where water is checked to the top of wall or an extreme SWL load case combination, were developed for design checks for the survivability of a structure.

NOTES ON IMPACT LOADS:

1. All walls outside locations of barge / boat impact zones, shall include a minimum debris impact loading of 0.5 kips/lf

2. Designs shall assume the appropriate barge impact load (See paragraph 5.2.1 Loading Conditions) where barge impact can occur now or in the future. Use a 50 kip load for other vessels, such as pleasure craft or work boats. Current obstructions that are marginal and have a high probability of not lasting the project life shall be assumed non-existent.

3. Wall load distribution. Boat/Barge impact loads shall be distributed over a 5 foot width plus the width gained along 45-degree angles in the vertical direction thus increasing the distribution downward towards the base. Minimum debris impact loads shall be applied across the entire wall/monolith length. As a design check, the boat/barge impact loadings shall be applied 5 feet from the edge of the monolith with a minimum Factor of Safety of 1.0 (no overstress) and submitted to the USACE engineer of record for review.

4. Foundation load distribution. Impact loads (Barge, Boat, Debris), shall be distributed over the full width of the monolith foundation at the appropriate elevation. As a design check, the boat/barge impact loadings shall be applied 5 feet from the edge of the monolith with a minimum Factor of Safety of 1.0 (no overstress) and submitted to the USACE engineer of record for review.

5. Gate load distribution. Boat/Barge impact loads shall be distributed over a 5 foot width on the upper girder. No load is assumed on the lower girder(s). Minimum debris impact loads shall be applied across the entire upper girder length.

NOTES ON STILL WATER LEVELS (SWL)

1. For BASIC LOAD CASE (BLC) COMBINATIONS, use the 1% (100-yr) SWL at a 90% confidence and the Unusual (100-yr) impact loads.

2. For DESIGN RESILIENCY CHECKS (DRS), use the 0.2% (500 yr) SWL, at a 90% confidence, if this elevation is “less” than the Top of Wall (TOW) elevation.

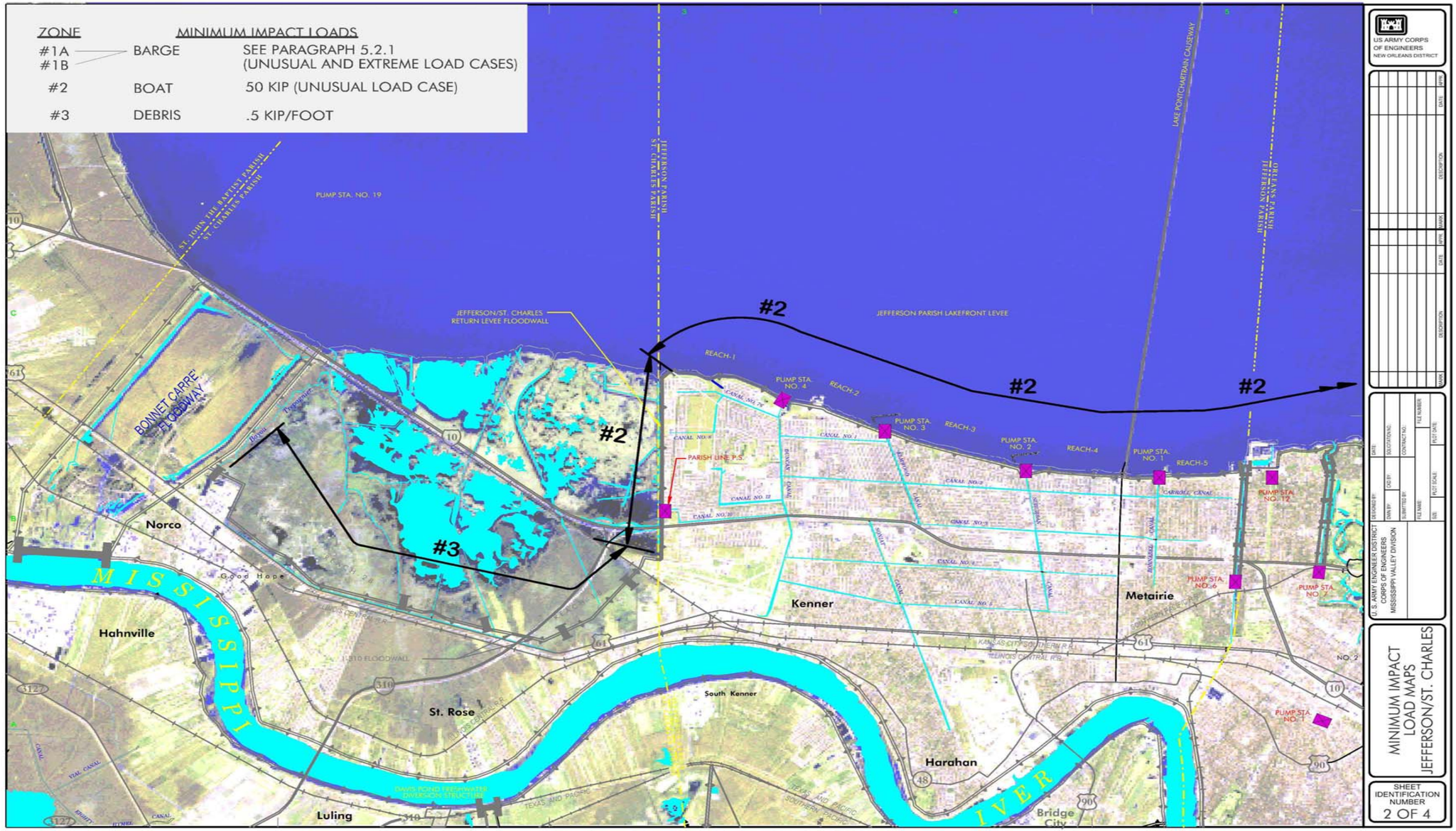

Figure 0.4 Boat/Barge Impact Map St. Charles – Jefferson Parish

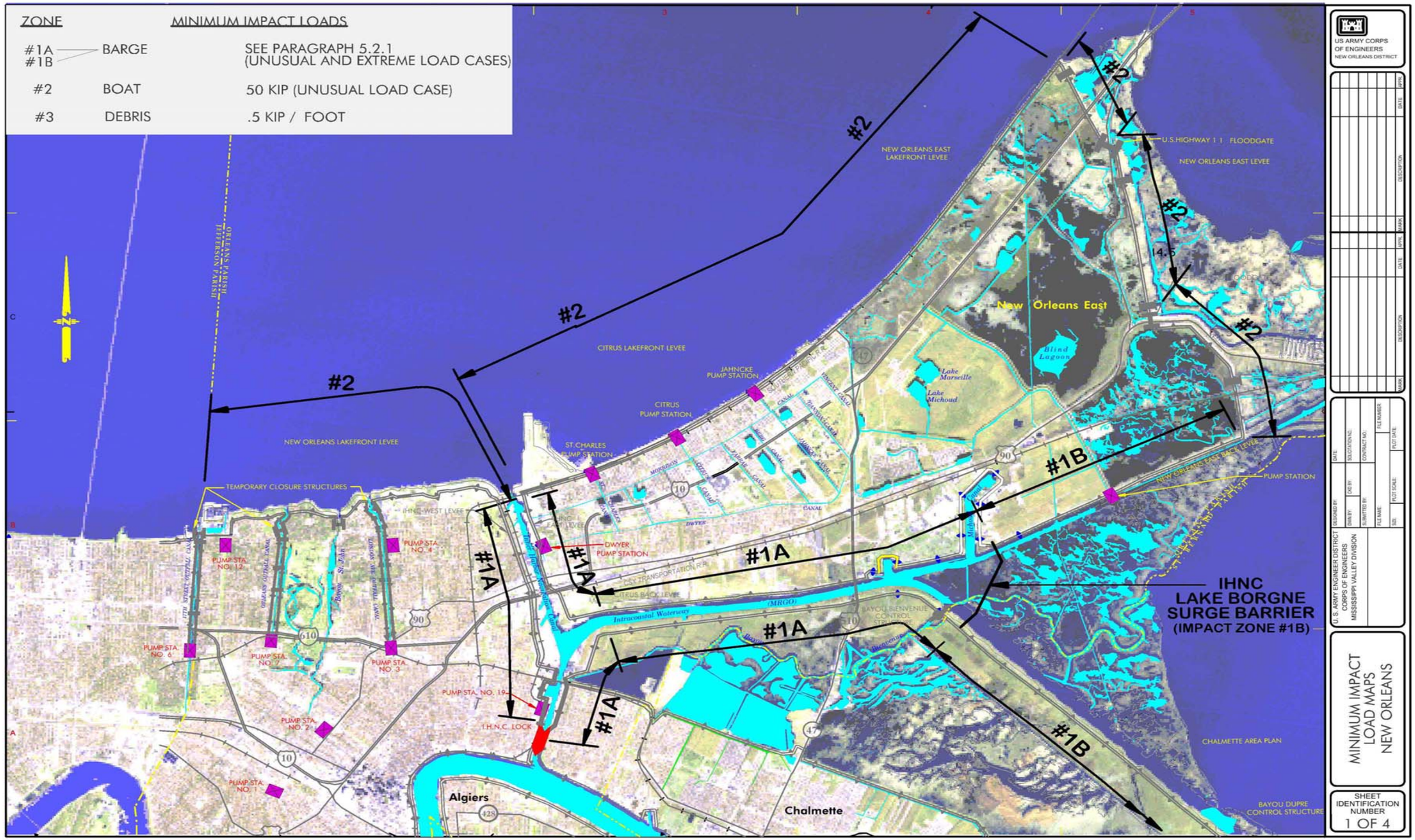

Figure 5.5 Boat/Barge Impact Map New Orleans Area

ZONE		MINIMUM IMPACT LOADS
#1A #1B	BARGE	SEE PARAGRAPH 5.2.1 (UNUSUAL AND EXTREME LOAD CASES)
#2	BOAT	50 KIP (UNUSUAL LOAD CASE)
#3	DEBRIS	.5 KIP / FOOT

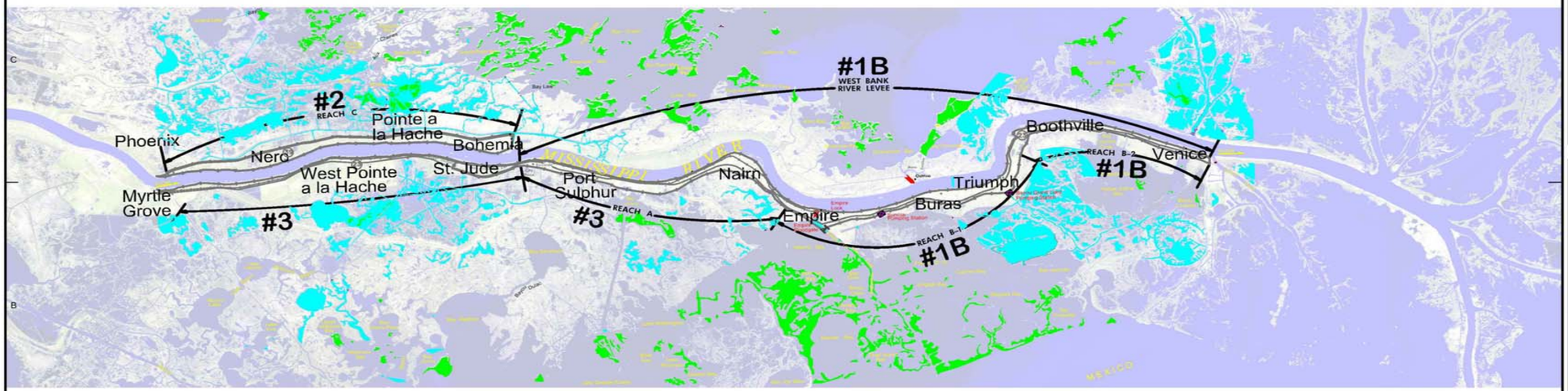

MISSISSIPPI RIVER WALLS / STRUCTURES - #1B

WEST BANK BACK LEVEE - #3

EAST BANK BACK LEVEE - #3

EXCEPTION - MARINA AREAS - #2

US ARMY CORPS OF ENGINEERS
NEW ORLEANS DISTRICT

U.S. ARMY ENGINEER DISTRICT
CORPS OF ENGINEERS
MISSISSIPPI VALLEY DIVISION

MINIMUM IMPACT LOAD MAPS PLAQUEMINES

SHEET IDENTIFICATION NUMBER
4 OF 4

PLAQUEMINES PARISH

FEBRUARY, 2011

Figure 5.6 Boat/Barge Impact Map Plaquemines Parish

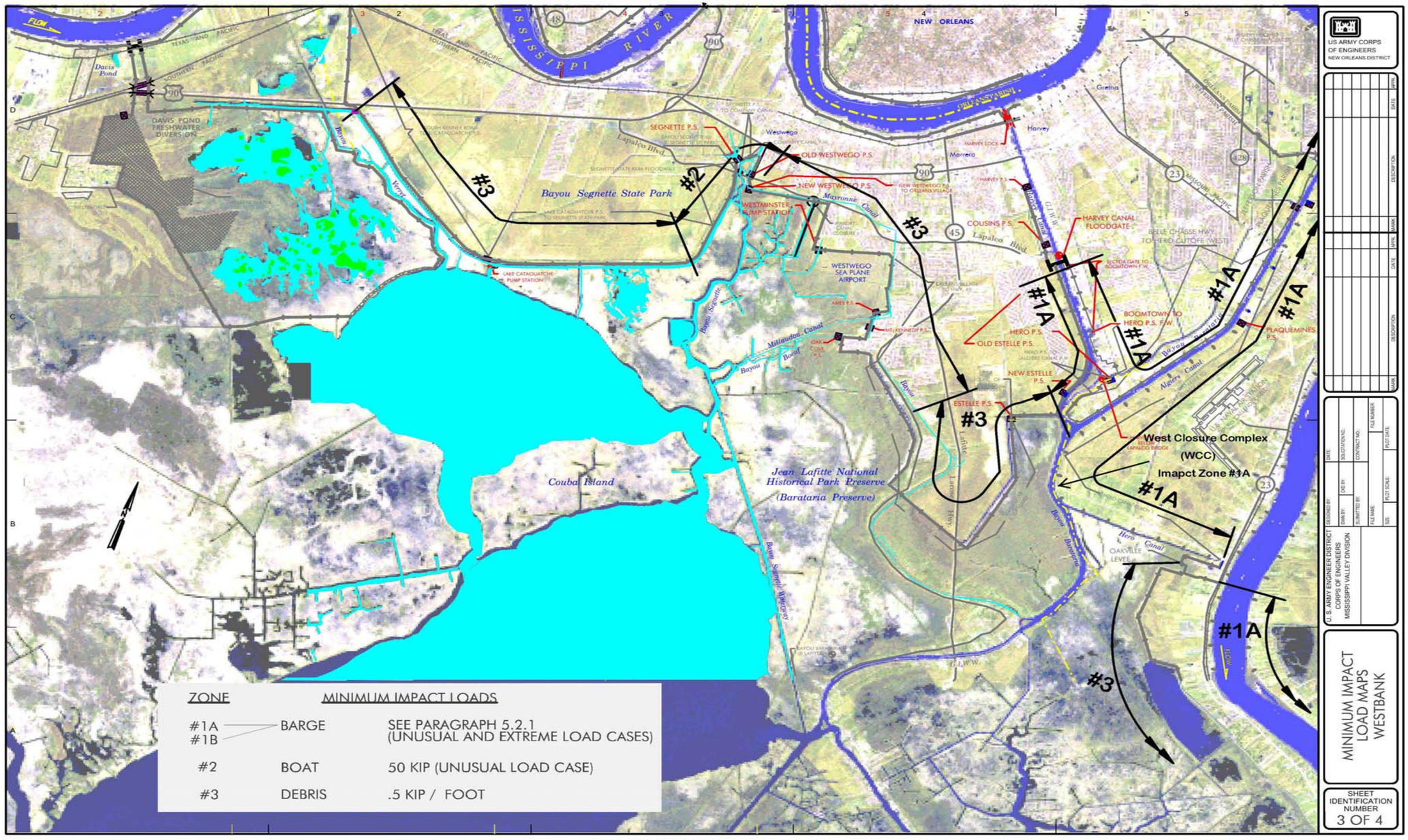

Figure 5.7 Boat/Barge Impact West Bank

6.0 MECHANICAL & ELECTRICAL

6.1 Sampling of References

- EM 1110-2-3102, General Principles of Pumping Station Design & Layout
- EM 1110-2-3105, Mechanical and Electrical Design of Pumping Stations
- UFGS 221000.0010, Vertical Pumps Axial Flow & Mixed Flow Impeller Type
- UFGS 334500.0010, Speed Reducer for Storm Water Pumps
- UFGS 416510.0010, Diesel & Natural Gas Fueled Engine Pump Drives
- NFPA 37, Standard for the Installation and Use of Stationary Combustion Engines and Gas Turbines

6.2 Mechanical

Mechanical systems should conform to established USACE criteria and standards with attention to the following suggested guidelines.

1. Wherever possible use vertical pumps, with form suction intakes (FSI).

2. Locate operating floor above maximum expected flood elevation.

3. Provide redundant flood protection by installing shut off gates at the pumps discharge.

4. Use aluminum pipe for combustion air intake ducts.

5. Design control room to be a “safe room” for continued operation during hurricane conditions. Safe rooms should have the capability to start, stop and monitor pump units, and control discharge gates and the trash rake. They also should have living accommodations for personnel during and after the storm. Redundant communication systems with backups should be provided also.

6. Provide diesel-driven generators for backup power supply. If pumping station is to be located in an area rich in underground natural gas distribution lines, specify natural gas engines in lieu of diesel engines for: (a) reliability (no storage tanks, transfer pumps, piping, level controls), (b) simplicity of design and (c) vandalism protection.

7. Other equipment or components should be elevated above the maximum expected flood elevation as much as practicable, including the fuel storage area, access roads to the pump station, the fuel distribution system. Attention shall be given to the elevation of combustion air filter/silencers, trash screen cleaners motors and controls.

8. When clean water is required for bearing lubrication, provide a local water well source as a backup for municipal water.

9. Provide event recorders which also record water levels. Recorders should be automated in both operation and reporting.

6.3 Electrical

All Electrical Systems shall confirm to the established USACE criteria and standards with attention to the following suggested guidelines:

1. Locate all electrical equipment including back-up generators, electrical controls and external electrical connections above maximum expected flood elevation.

2. Back-up power should be sized and designed for operation during storms to provide adequate power for station ventilation, lights, HVAC, fuel transfer pumps, trash rake cleaners, automatic pump lubricators, air compressors and all other critical systems.

UPDATED 04 OCT 07

PART B:
STANDARDS

7.0 UTILITY RELOCATIONS QUESTIONNAIRES

Following are sample questionnaires to be used to collect information from owners of affected facilities.

7.1 Company Information

(revised 9/04)

U.S. ARMY CORPS OF ENGINEERS
NEW ORLEANS DISTRICT
RELOCATIONS SECTION
COMPANY INFORMATION

_____Project, _____, LA

1. Official Name of Facility/Utility Owner, as reflected in the records of the Louisiana Secretary of State:

_____

2. Type of Business Entity (check one):

___ Limited Liability Company (LLC)

___ Corporation

___ Partnership

___ Other (define):

3. Provide name of state of incorporation:

_____

4. If the state of incorporation is not Louisiana, has the corporation registered with the Louisiana Secretary of State as a foreign corporation?

____ YES

____ NO

5. Provide information about nature of work or corporate purpose:

_____

_____

_____

_____

6. Provide name, address, telephone number and e-mail address of person available for contact by Corps of Engineers:

Right-of-Way Department _____

_____

Legal Department _____

_____

Other _____

_____

7. Provide information about real property upon which facilities are located. Is it owned in fee, servitude, or leased?

_____

_____

8. If facility owner has written recorded rights-of-way and/or lease, provide a copy of rights-of-way document and/or lease, and if the document is recorded, provide the recordation information.

9. Please explain any and all predecessor(s) in interest:

_____

_____

_____

_____

_____

10. Indicate width of right-of-way.

_____

11. If facility is a pipeline, is it a common carrier?

_____

12. If facility was placed pursuant to a permit, provide the name of agency that issued permit (including, but not limited to, permits for Section 10 of The Rivers and Harbors Act of 1899 and permits from municipalities or local governments), the permit number, and the date on which the permit was issued. Please attach a copy of the permit or the Corps of Engineers letter explaining that no permit was needed, if the company had applied for such a permit.

_____

_____

_____

_____

_____

13. The date the facility was first installed: _____

7.2 Communication Lines

U.S. ARMY CORPS OF ENGINEERS
NEW ORLEANS DISTRICT
RELOCATIONS SECTION
DESCRIPTIVE INFORMATION FOR COMMUNICATION LINES

1. Company Name:

2. Description (trunk, primary, etc.):

3. Size (pair, gauge, etc.):

4. Type (aerial, buried, submerged, etc.):

5. Location

USACE Project Baseline Station:

Longitude, Latitude Coordinates:

6. Function Served:

7. Date Installed:

8. Design Life:

9. Total Length of Facility:

10. Current Status of Facility (active, inactive, abandoned, etc.):

11. Clearance (height from lowest line crossing over project to top elevation of project):

12. Other Pertinent Data (manholes, towers, etc.):

7.3 Highway Bridges

U.S. ARMY CORPS OF ENGINEERS
NEW ORLEANS DISTRICT
RELOCATIONS SECTION
DESCRIPTIVE INFORMATION FOR HIGHWAY BRIDGES

1. Company Name:

2. Location (city, street, road, highway served, etc.):

3. Type of Bridge (concrete, steel, timber, etc.):

4. Design Load:

5. Description (bents, piers, decking, foundation, piling, etc.):

6. Embankment Slope Protection in Channel (type, thickness, etc.):

7. Number of Bridges and Lanes with Clear Width Dimension:

8. Class of Road Served (primary, secondary, class-I, 2, A, B, etc.):

9. Traffic Information (daily traffic count, type of traffic, etc.):

10. Provide Drawings (showing profile, overall length, spans, decks, pile penetration and elevation of high water on bridge):

7.4 Navigation Lights

U.S. ARMY CORPS OF ENGINEERS
NEW ORLEANS DISTRICT
RELOCATIONS SECTION
DESCRIPTIVE INFORMATION FOR NAVGATION LIGHTS

COMPANY _____

1. Description. (size, type facility, etc.) _____

_____

2. Number of Hours in Service _____

_____

3. Width of Existing R-O-W _____

_____

4. Location (See Note) _____

5. Latitude/Longitude _____

5. Functions Served _____

6. Date Installation _____

_____

7. Design Life _____

_____

8. Other Pertinent Data _____

Note: Question #4, if facility crosses project, give project stationing.

7.5 Conveyor Shafts

U.S. ARMY CORPS OF ENGINEERS
NEW ORLEANS DISTRICT
RELOCATIONS SECTION
DESCRIPTIVE INFORMATION FOR CONVEYOR SHAFTS

COMPANY _____

1. Description. (size, type facility, etc.) _____

_____

2. Number of Hours in Service _____

_____

3. Width of Existing R-O-W _____

_____

4. Location (See Note) _____

5. Latitude/Longitude _____

5. Functions Served _____

6. Date Installation _____

_____

7. Design Life _____

_____

8. Other Pertinent Data _____

Note: Question #4, if facility crosses project, give project stationing.

7.6 Pipelines

U.S. ARMY CORPS OF ENGINEERS
NEW ORLEANS DISTRICT
RELOCATIONS SECTION
DESCRIPTIVE INFORMATION FOR PIPELINES

1. Company Name:

2. Size (Diameter) and Type of Facility:

3. Type of Construction (Steel, cast iron, etc):

4. Function Served (oil, gas, water, etc):

5. Location

USACE Project Baseline Station:

Longitude, Latitude Coordinates:

6. Date Installed:

7. Design Life:

8. Total Length of Facility:

10. Current Status of Facility (active, inactive, abandoned, etc.)

11. Other Pertinent Data (Manholes, Valves, etc):

12. Depth of pipeline beneath levee or channel

7.7 Powerlines

U.S. ARMY CORPS OF ENGINEERS
NEW ORLEANS DISTRICT
RELOCATIONS SECTION
DESCRIPTIVE INFORMATION FOR POWERLINES

1. Company Name:

2. Description (transmission, primary, distribution, etc.):

3. Size (voltage, gauge, etc.):

4. Type (aerial, buried, submerged, etc.):

5. Location of utility pole(s) supporting powerline.

USACE Project Baseline Station

Offset from levee centerline

5. Location (where line crosses levee centerline)

USACE Project Baseline Station:

Longitude, Latitude Coordinates:

6. Function Served:

7. Date Installed:

8. Design Life:

9. Total Length of Facility:

10. Current Status of Facility (active, inactive, abandoned, etc.):

11. Clearance (height from lowest line crossing over project to top elevation of project):

12. Other Pertinent Data (manholes, towers, etc):

7.8 Railroad Bridges

U.S. ARMY CORPS OF ENGINEERS
NEW ORLEANS DISTRICT
RELOCATIONS SECTION
DESCRIPTIVE INFORMATION FOR RAILROAD BRIDGES

1. Company Name:

2. Type of Bridge (timber, steel, concrete, etc.):

3. Number of Tracks:

4. Description of Superstructure:

5. Width of Right of Way:

6. Designed Load:

7. Quantity and Type of Trains Scheduled Daily:

8. Provide Drawings (show profile, overall length, spans, pile penetration, and elevation of high water on bridge):

9. Other Pertinent Data:

8.0 GEOTECHNICAL INVESTIGATIONS

Throughout this section, reference to the "Contractor" simply means the entity responsible for the subject work. The same procedures and requirements generally apply to anyone providing geotechnical investigation services, whether the work is done in-house or by other USACE districts.

8.1 Contractor Requirements

Each work unit shall consist of personnel duly qualified and experienced to perform the type of required services. The Contractor shall use professional judgment in determining what equipment and/or supplies are needed to complete each delivery order assignment. The Government reserves the right to inspect and to monitor the activities of the A-E's work in determining that the A-E is performing the required services in accordance with Government standards procedures. The Contractor shall submit a time and cost estimate for each proposed assignment. The Contractor shall also submit detailed plans for performance of the work. The Contractor shall perform soil borings, testing, logging, reporting and plotting in the Corps of Engineers, New Orleans Districts (Government) format. The Corps of Engineers (or the Designer of Record) will pick the type of soil borings, boring sample size and length, boring locations, type and location of required soil lab tests.

8.1.1 Field Assignments

The Contractor will be responsible for locating, clearing, determining ground surface elevations and water tables, retrieving soil borings (including 1-7/8" I.D. Splitspoon, 3" general type and undisturbed type and 5" Undisturbed soil borings), sealing boreholes, and acquiring other equipment as necessary to complete the field assignments. Borings may include work in marsh areas, and/or work over water.

8.1.2 Office and Laboratory Assignments

The Contractor will be responsible for classifying and testing soil samples and computing, compiling and furnishing plotted boring logs of the resulting field and laboratory data.

8.1.3 Quality Assurance

The Contractor shall discuss each proposed assignment to develop a mutual understanding of:

(1) Type of work to be done
(2) Received Soil Boring Locations
(3) End result expected by the COR

(4) Methods to be used by the Contractor
(5) Format of computations and/or drawings
(6) Completion data required by a date to be determined by the Government.

A Government representative shall be present during boring retrieval and sample testing at various times to be determined by the Government in order to perform quality assurance and to verify boring sample quality and soils testing accuracy.

8.1.4 Government Furnished Materials

The Contractors automated computations shall follow the same format as that used by the Government. The necessary, locally derived, MS-DOS/Windows programs can be made available if required by the Contractor. Due to copyright laws commercially available off-the-shelf programs, such as CADD-type programs, will not be available from the Corps.

Point of Contact is Denis J. Beer, P.E. at Denis.J.Beer@usace.army.mil.

8.2 Subsurface Investigations

8.2.1 Locating and Setting-Up for Borings

Normally the Government will obtain right of entry to take soil borings and inform the local sponsor that clearing of small trees and underbrush may be required. The Contractor shall locate borings; cut brush and/or timber to provide access to the site; obtain latitude, longitude, ground surface elevations and water table elevations; and set-up soil boring drill rigs in the field. The Government (or Designer of Record) will furnish soil boring locations. The Government (or Designer of Record) will supply a map showing the soil boring locations. The locations will be either tied to a baseline with a station, distance and azimuth to each boring location, if one exists, or lat/longs or X-Y coordinates are provided for each location. Vertical control for use in determining the ground surface elevations of the borings will be furnished by the Contractor. The Contractor should contact the Government for benchmark information.

8.2.2 Sampling of Borings

The Contractor shall use a fixed-piston type sampling method (Hvorslev fixed-piston or equivalent) for (CH), (CL) and (ML) type soils and be capable of providing undisturbed sampling to depths of 300 ft. Bentonite based drilling mud shall be used throughout the sampling process to improve sample recovery and minimize sample disturbance. The sampler for (SM) and (SP) type soils shall be standard Splitspoon sampler (1-7/8 inch I.D., 2 inch O.D.). The driving resistance in blows per foot shall be determined for (SM) and (SP) type soil with a 140 pound driving hammer having a 30" drop. The Driller shall state the type of hammer used for the SPT, such as automatic or two rope-wraps around cathead.

The driller will measure the hammer energy delivered to the drill rods from the sampler for each drill rig. The hammer and how the hammer energy was obtained will be placed on the boring log. The Government or the Designer of Record should determine if a correction factor is applied to the SPT results. The Contractor should be aware that a number of borings will be taken from marshy environments that may require special equipment, such as marsh buggies.

8.2.2.1 Shelby Tube Sampling

The general type piston sampler shall utilize a minimum of 3 inch Shelby Tubes (3" O.D., approx. 2-7/8" I.D.) that are a minimum of 46 inches in length with sealing caps. An undisturbed type piston sampler shall utilize a minimum of 5 inch thin-wall Shelby Tubes (5" O.D., approx. 4-3/4" I.D.) that are a minimum of 54 inches in length with sealing caps. During sampling with the fixed-piston type sampler, the piston should be locked at the bottom of the sampling tube until it is seated on the bottom of the borehole. The piston shall be released, piston rod held in place, and the tube shall be pushed in one or two pushes to obtain sample. The sample tube is then removed hydraulically through a vacuum then with hoists and cables. The Contractor shall use the Government field boring log form as a record of soil stratification and soil sampling (see Figure 8.3). A copy of the original field boring logs shall be supplied to the Government. The soil samples will be preserved in airtight containers to prevent loss of moisture.

8.2.2.2 Sample Storage, Extrusion and Shipment

Once samples have been removed from the boreholes for undisturbed soil borings, they must be sealed within the sampling tube with end caps and ends taped prior to shipment to the laboratory for extrusion, classification and testing. Hydraulically activated sample jacks shall be used to extrude the samples from the tubes. Mechanical and pneumatically activated sample jacks shall not be used to extrude the samples. All tubes shall be identified and labeled immediately to ensure correct orientation and to accurately identify the samples. ENG Form 1742 and/or ENG Form 1743, as shown in Figure 8.2 (or equivalent), should be completed and securely fastened to each sample. Sample tubes shall be shipped to the testing laboratory such that they are not allowed to roll around in the shipping vehicle, nor should they be dropped or otherwise roughly handled. Samples shall be protected from extreme temperatures and exposure to moisture. Samples shall be extruded from the tube within 5 days after retrieval and shall be kept in air-tight container. Any samples that will be tested more than seven (7) days after extrusion shall be waxed. Waxed samples shall be stored in a humid room. All storage, extrusion and shipment procedures shall be done in accordance with EM 1110-1-1804, Chapter F, paragraphs 6-5 through 6-7. Samples remaining after testing will remain at the Contractor's office until the Government requests their disposal or collected by the Government.

8.2.2.3 Backfilling of Borehole

Upon completion of the borings, the borehole shall be grouted full depth in accordance with State of Louisiana regulations. Grout mix should consist of 2 part cement and 1 part bentonite and shall be tremie grouted from the bottom of the hole within three feet of the ground surface. The top three feet will be backfilled with native soil.

8.3 Laboratory Soil Testing

8.3.1 Laboratory Facilities

A laboratory preferably should be on a ground floor or basement with a solid floor and should be free of traffic and machinery vibrations. Separate areas should be designated for dust producing activities such as sieve analyses and sample processing. Temperature control of the entire laboratory is to be preferred. If the temperature-controlled space is limited, this space should be used for triaxial compression, consolidation, and permeability testing. A humid room large enough to permit the storage of samples and the preparation of test specimens should be available. The Contractor shall, at its own expense, obtain validation as an approved testing laboratory by the Materials Testing Center (MTC) of the Engineering Research and Development Center (ERDC). This shall be done in accordance with ER 1110-1-8100 and ER 1110-1-261. Depending upon the workload by the Government inspecting agency, acceptance or rejection of the Contractor proposed testing laboratory is usually done approximately 60 to 120 days after notification is received from the Contractor. The certification is typically valid for three years.

8.3.2 Soil Classification

The Contractor shall classify, record and plot soil data within 7 days of obtaining the samples from the field. A water content determination shall be made and recorded on all samples classified as (CH), (CL), and (ML). The Unified Soil Classification System and the “Guide for Moisture Contents adapted to CEMVN-ED-F Soils” shall be used in classifying the soils (see Figures 8.4 and 8.5). All data recorded during the classification process (including but not limited to strata elevations, soil type, moisture content, consistency, color and modifiers) shall be recorded and furnished on LMN form 721, Nov 69 (see Figure 8.1), as well as in a computer file format specified by the Government.

The soil borings logs shall also be plotted and supplied to the Government using computer software available from the government. Request should be made for the General Boring Log Program (FG002) and Undisturbed Boring Log Program (FS008). Note: This software will only execute under Micro Station SE or J. The location, number and type of soils testing shall be furnished to the Contractor within 3 days of the receipt of the soil classification and boring log data.

8.3.3 General Soils Testing

All general soils testing shall begin within 14 days of the receipt of the number and location of the soils tests from the Government (or the Designer of Record). Atterberg Limits determinations will be made on representative clay (CH) and clayey (CL & ML) fractions of the boring at a rate and/or at a location defined by the Government (or the Designer of Record). Grain size distribution determinations may be required; these may include both sieve and hydrometer testing. General soils testing shall be in accordance with EM 1110-2-1906.

8.3.4 Compressive Strength Tests

All compressive strength testing shall begin within 14 days of the receipt of the number and location of the soils tests from the Government (or the Designer of Record). An explanation of any atypical data, such as calibration factors, correction factors, shall be furnished in addition to the following. Upon request, the Contractor shall furnish to the Government duplicate samples of test specimens for possible testing by the Government.

8.3.4.1 Unconfined Compression Tests

Unconfined Compression Tests (UCT) described in EM 1110-2-1906 will be performed on representative samples on 3-inch general type and 5-inch undisturbed samples at an interval and/or at locations defined by the Government (or Designer of Record). UCT specimens shall have a diameter of 1.4 inches and a minimum length of 3.0 inches. UCT results shall include, but not be limited to, boring name, sample elevation, sample location, strain rate, specific gravity, water content, wet density, dry density, saturation, void ratio, diameter and height. In addition, the Contractor shall supply plotted compressive stress vs. axial strain plots, to include unconfined compressive strength, failure strain, and undrained shear strength.

8.3.4.2 Triaxial Shear Tests

Triaxial shear tests described in EM 1110-2-1906 will be required on selected 5 inch undisturbed samples. The 5 inch diameter sample shall be cut into 4 equal specimens such that each specimen can be trimmed for testing. The specimen size for triaxial testing shall be 1.4 inches in diameter and 3 to 3.5 inches in length. The triaxial shear test is defined by a suite of three tests performed at three different confining stresses (the maximum confining pressure shall be at least equal to the maximum normal pressure expected in the field with the project in place) performed on three trimmed specimens from the same 5-inch sample. The fourth specimen shall be tested if verification of one of the first three tests in necessary. The Triaxial shear testing will be Unconsolidated Undrained (Q) tests, Consolidated Undrained (R) tests with pore pressure data measured and recorded, and Consolidated Drained Direct (S) tests. The axial load induced to the

specimens shall be done so at a rate of 1.0 percent per minute until an axial strain of 20 percent has been reached. A strain rate of 0.3 percent per minute shall be used for materials that achieve maximum deviator stress at about 3 to 6 percent strain. Results from triaxial tests shall include, but not be limited to, the boring name, sample elevation, sample location, Atterberg Limits, unit weight, specific gravity, water content, dry density, saturation, void ratio, diameter and height, back pressure, cell pressure, failure stress, ultimate stress, and deviator stress at failure. In addition, plotted stress strain curves and Mohr Circle plots shall be furnished for each specimen tested. Generated Mohr-Coulomb failure envelope plots (to include computer generated/selected compressive stress values (cohesion) and values for internal friction angles) shall be furnished.

8.3.5 Consolidation Testing

Consolidation tests described in EM 1110-2-1906 will be required on selected 5 inch undisturbed samples. The 5 inch diameter sample shall be trimmed to tightly fit a consolidation ring with diameter not less than 4.0 inches in diameter. The specimen should be loaded according to the following normal increments: 0.25, 0.5, 1.0, 2.0, 4.0, 8.0, and 16.0 tons per square foot. Lower starting load may be necessary for a sample with minor overburden. Readings of deformation (as determined from dial indicator readings) versus time shall be measured and recorded at the following times: 0.1, 0.2, 0.5, 1.0, 2.0, 4.0, 8.0, 15.0, and 30.0 minutes and 1, 2, 4, 8, and 24 hours. If primary consolidation has not occurred in the first 24 hours, hold the load for an additional 24 hours each day until primary consolidation has occurred. Continuous saturation of the sample shall be maintained until each test is complete. Results from consolidation tests shall include, but not be limited to, the boring name, sample elevation, sample location, Atterberg Limits, specific gravity, water content, dry density, saturation, initial void ratio, and diameter and height of the sample. In addition, plotted curves of (1) applied pressure versus void ratio, (2) applied pressure vs. Cv, and (3) dial gage reading versus time for each load increment shall be furnished and (3) Casagrande construction to indicate the maximum past preconsolidation pressure.

8.3.6 Logging and Reporting

The results of the field borings and laboratory tests shall be shown and furnished on LMN form 721, Nov 69, as well as in a computer file format specified by the Government. The completed logs and test results shall be furnished to the Government no later than 15 days after testing has been completed. The soil borings shall also be reported and furnished as plotted stratified soil logs and shall contain all field/laboratory testing information. In addition the logs will be furnished and named as specified by the Government. They shall be furnished in a Windows 2000 compatible file format and/or Microstation 4.0 (or later) Intergraph CADD file format. The government will furnish the computer software necessary to plot the soil borings as stated in 8.3.2.

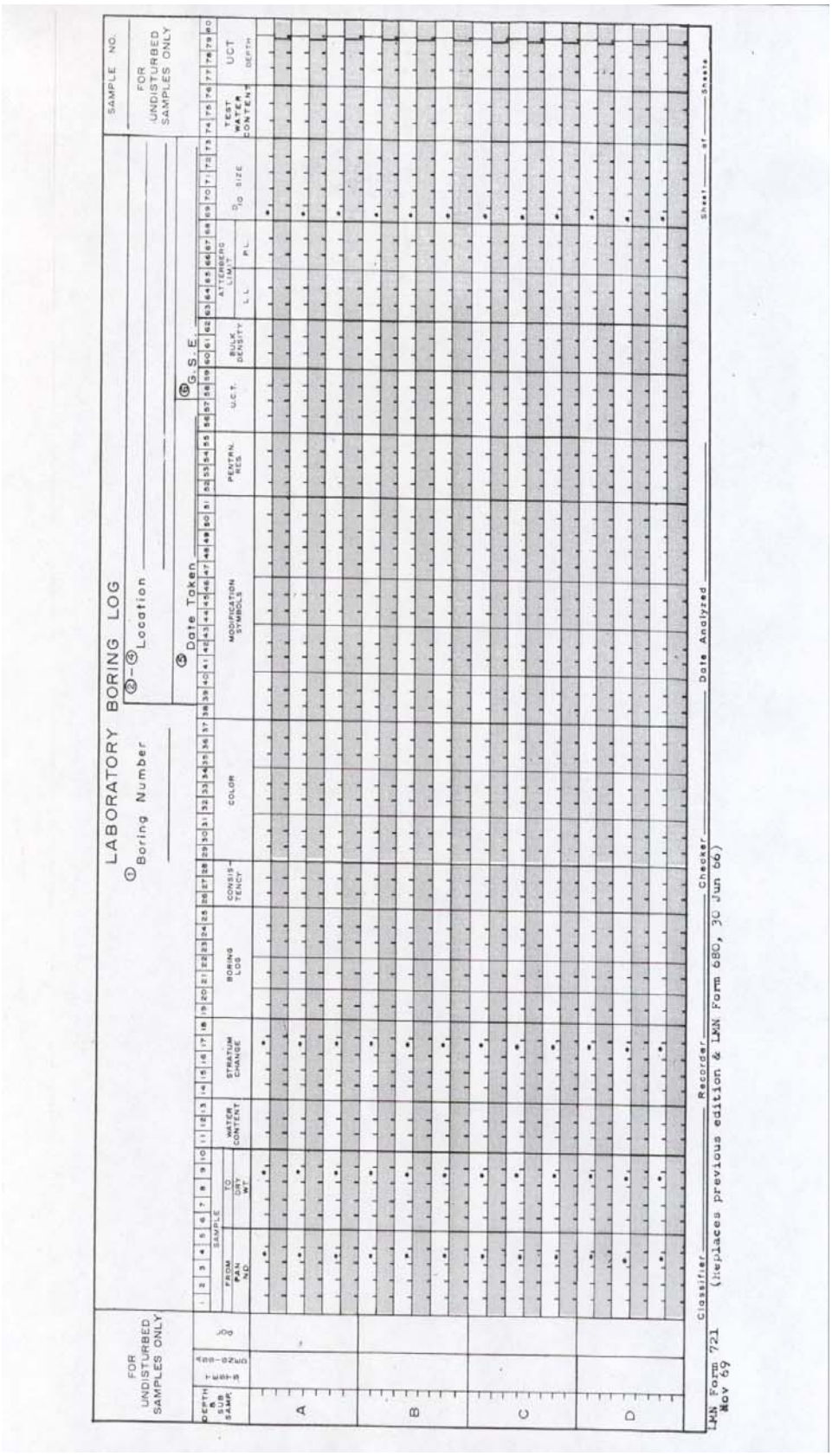

Figure 8.1. LMN Form 721

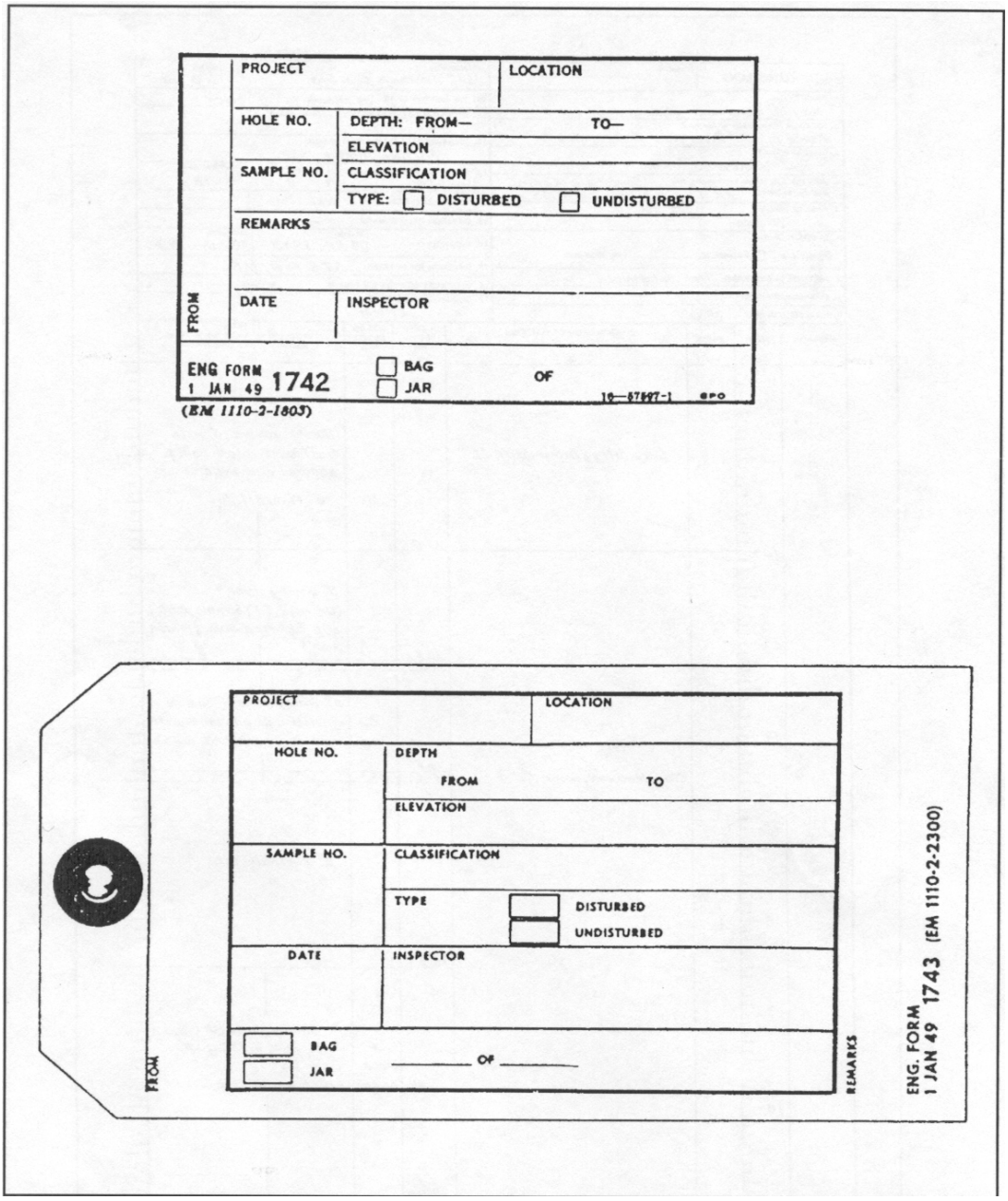

Figure 8.2 ENG Forms 1742 & 1743

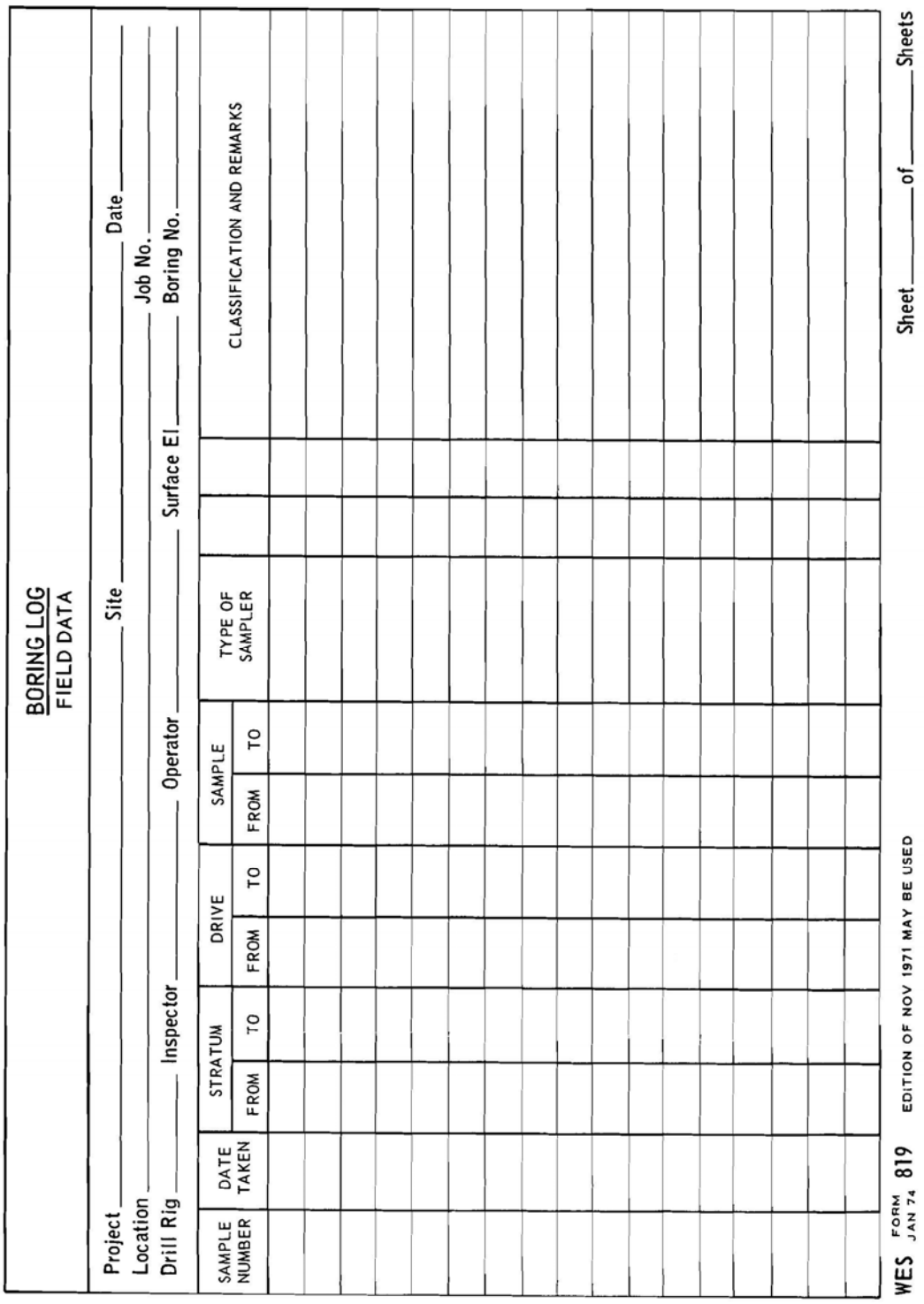

Figure 8.3 WES Form 819

UPDATED 04 OCT 07

UNIFIED SOIL CLASSIFICATION

MAJOR DIVISION		TYPE	LETTER SYMBOL	SYMBOL	TYPICAL NAMES
COARSE - GRAINED SOILS	GRAVELS (More than half of coarse fraction is larger than No. 4 sieve size.)		GW		GRAVEL,Well Graded,gravel-sand mixtures,little or no fines
			GP		GRAVEL,Poorly Graded,gravel-sand mixtures,little or no fines
		GRAVEL WITH FINES (Appreciable amount of fines)	GM		SILTY GRAVEL,gravel-sand-silt mixtures
			GC		CLAYEY GRAVEL,gravel-sand-clay mixtures
	SANDS (More than half of coarse fraction is smaller than No. 4 sieve size.)	CLEAN SANDS (Little or No Fines)	SW		SAND,Well-Graded,gravelly sands
			SP		SAND,Poorly-Graded,gravelly sands
		SANDS WITH FINES (Appreciable amount of fines)	SM		SILTY SAND,sand-silt mixtures
			SC		CLAYEY SAND,sand-clay mixtures
FINE - GRAINED SOILS (More than half the material is smaller than No. 200 sieve size.)		SILTS AND CLAYS (Liquid Limit less than 50)	ML		SILT & very fine sand,silty or clayey fine sand or clayey silt with slight plasticity
			CL		LEAN CLAY,Sandy Clay,Silty Clay,of low to medium plasticity
			OL		ORGANIC SILTS,and organic silty clays of low plasticity
		SILTS AND CLAYS (Liquid Limit greater than 50)	MH		SILT,fine sandy or silty soil with high plasticity
			CH		FAT CLAY,inorganic clay of high plasticity
			OH		ORGANIC CLAYS of medium to high plasticity,organic silts
HIGHLY ORGANIC SOILS			Pt		PEAT,and other highly organic soil
WOOD			Wd		WOOD
SHELLS			SJ		SHELLS
NO SAMPLE			NS		No Sample Retrieved

NOTE: Soils possessing characteristics of two groups are designated by combinations of group symbols.

DESCRIPTIVE SYMBOLS

COLOR	SYMBOL
TAN	T
YELLOW	Y
RED	R
BLACK	BK
GRAY	Gr
LIGHT GRAY	lGr
DARK GRAY	dGr
BROWN	Br
LIGHT BROWN	lBr
DARK BROWN	dBr
BROWNISH-GRAY	brGr
GRAYISH-BROWN	gyBr
GREENISH-GRAY	gnGr
GRAYISH-GREEN	gyGn
GREEN	Gn
BLUE	Bl
BLUE-GREEN	BlGn
WHITE	Wh
MOTTLED	Mot

CONSISTENCY FOR COHESIVE SOILS		
CONSISTENCY	COHESION IN LBS./SQ.FT. FROM UNCONFINED COMPRESSION TEST	SYMBOL
VERY SOFT	< 250	vSo
SOFT	250-500	So
MEDIUM	500-1000	M
STIFF	1000-2000	St
VERY STIFF	2000-4000	vSt
HARD	> 4000	H

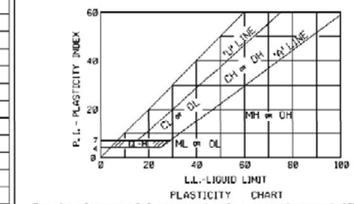

PLASTICITY CHART

For classification of fine-grained soils in accordance with ASTM D 2487

MODIFICATIONS	
MODIFICATION	SYMBOL
Traces	Tr
Fine	F
Medium	M
Coarse	C
Concretions	cc
Rootlets	rt
Lignite fragments	lg
Shale fragments	sh
Sandstone fragments	sds
Shell fragments	slf
Organic matter	O
Clay strata or lenses	CS
Silt strata or lenses	SIS
Sand strata or lenses	SS
Sandy	S
Gravelly	G
Boulders	B
Slickensides	SL
Wood	Wd
Oxidized	Ox

NOTES:

FIGURES TO LEFT OF BORING UNDER COLUMN "W OR D_{10}"

Are natural water contents in percent dry weight

When underlined denotes D_{10} size in mm *

FIGURES TO LEFT OF BORING UNDER COLUMNS "LL" AND "PL"

Are liquid and plastic limits, respectively

SYMBOLS TO LEFT OF BORING

▽	Ground-water surface and date observed
Ⓒ	Denotes location of consolidation test**
Ⓢ	Denotes location of consolidated-drained direct shear test **
Ⓟ	Denotes location of consolidated-undrained triaxial compression test **
Ⓤ	Denotes location of unconsolidated-undrained triaxial compression test **
Ⓣ	Denotes location of sample subjected to consolidation test and each of the above three types of shear test **
FW	Denotes free water encountered in boring or sample

FIGURES TO RIGHT OF BORING

Are values of cohesion in lbs./sq.ft. from unconfined compression tests

In parenthesis are driving resistances in blows per foot determined with a standard split spoon sampler (1 3/8" I.D., 2" O.D.) and a 140 lb. driving hammer with a 30" drop

Where underlined with a solid line denotes laboratory permeability in centimeters per second of undisturbed sample

Where underlined with a dashed line denotes laboratory permeability in centimeters per second of sample remoulded to the estimated natural void ratio

*The D_{10} size of a soil is the grain diameter in millimeters of which 10% of the soil is finer, and 90% coarser than D_{10}

**Results of these tests are available for inspection in the U.S. Army Engineer District Office, if these symbols appear beside the boring logs on the drawings.

TYPICAL NOTES:

1. While the borings are representative of subsurface conditions at their respective locations and for their respective vertical reaches, local variations characteristic of the subsurface materials of the region are anticipated and, if encountered, such variations will not be considered as differing materially within the purview of the contract clause entitled "Differing Site Conditions".
2. Ground-water elevations shown on the boring logs represent ground-water surfaces encountered in such borings on the dates shown. Absence of water surface data on certain borings indicates that no ground-water data are available from the boring but does not necessarily mean that ground-water will not be encountered at the locations or within the vertical reaches of such borings.
3. Consistency of cohesive soils shown on the boring logs is based on driller's log and visual examination and is approximate, except within those vertical reaches of the borings where shear strengths from unconfined compression tests are shown.
4. Unless otherwise noted:
   a. Undisturbed borings, indicated by the letter "U", are taken with a 5" I.D. Piston Type Sampler.
   b. General type borings are taken with a 1 7/8" I.D. Tube Sampler and/or a 1 3/8" I.D. Split Spoon Sampler.

REVISED 25 JUNE 92

SOIL BORING LEGEND

U.S. ARMY ENGINEER DISTRICT, NEW ORLEANS
CORPS OF ENGINEERS
NEW ORLEANS, LOUISIANA

DESIGNED BY: VOJKOVICH	DATE: APRIL 1992	CADD FILE: SOILLEGEND
DRAWN BY: WOODS	PLOT DATE: 30 MAR 93	FILE NO: H-2-30962
CHECKED BY: RICHARDSON	SCALE: 200	

PLATE A

Figure 8.4 Unified Soil Classification System

Guide for
*** MOISTURE CONTENTS**
ADAPTED TO CEMVN-ED-F SOILS

CLASS	STIFF	MEDIUM	SOFT	V. SOFT	LIQUID LIMIT	PLASTICITY INDEX
CH-4	41-53	43-65	55-80	67-130	70-110	45-75
CH-3	32-43	34-55	44-67	55-114	55-80	30-55
CH-2	27-34	30-44	38-55	48-90	50-60	25-40
CL-6	23-30	25-39	33-48	40-79	40-50	20-35
CL-4	20-25	21-33	27-41	35-67	28-43	10-25
CH-OA	.....				110-160	75-97
CH-OB	.....				160-185	97-115
CH-OC	.....				185-	115-

* For brown or oxidized soils, subtract 10% from the above Moisture Contents.

NOTE: We are using this with the Unified Soil Classification System as a guide and supplementation breakdown for CH's and CL's. We use the CHOA, CHOB and CHOC for organic fat clays in lieu of "OH" and CLOA, CLOB and CLOC for organic lean clays in lieu of OL when used for lean clays. Also, double classes are not used, such as SC-SM or CL-ML. The major class governs and the secondary is recorded as a modification or stratum as appropriate.

Figure 8.5 Unified Soil Classification System Modified for New Orleans Soils

9.0 SURVEYS

9.1 Survey Standards Manual

All surveys shall conform to the latest published version of CEMVN-ED-SS-06-01 “USACE New Orleans District Guide for Minimum Survey Standards.” This standard is approved for public release and distribution is unlimited. It is available at:
http://www.mvn.usace.army.mil/ed/edss/surveyingguidelines.asp

9.1.1 Purpose

The document provides guidance on performing detailed engineering surveys of facilities and civil works projects. Technical specifications, procedural guidance, and quality control criteria are outlined for surveying services performed in a consistent manner for the New Orleans District in support of hurricane and flood protection, hydrologic studies, construction, and mapping projects.

9.1.2 Applicability

The document applies to all in-house and A-E contract surveying services having responsibility for the planning, engineering and design, operation, maintenance, construction, and related real estate and regulatory functions of civil works, and environmental restoration projects. It is intended for use by hired-labor personnel, construction contractors, and Architect-Engineer (A-E) contractors. It is also applicable to surveys performed or procured by local interest groups under various cooperative or cost-sharing agreements.

9.1.3 Use of Manual

The Survey Standards document is intended to be a reference guide for control surveying, site plan mapping, utility and infrastructure utility feature mapping. These activities may be performed by hired-labor forces, contracted forces, or combinations thereof.

9.2 Quality Assurance

Survey work shall comply with the following Quality Assurance steps at a minimum. A-Es should reference the MVN Survey Section web page for procedures on contacting MVN for benchmark information and submittal procedures relative to their project. The page is located at: http://www.mvn.usace.army.mil/ed/edss/index.asp

9.2.1 Survey Plan

All A-E contract surveying services shall require a Survey Plan to be submitted to Engineering Division Surveys Section for Independent Technical Review prior to the planned surveying activities. The Survey Plan shall be constructed in accordance with the guidelines established in the "USACE New Orleans District Guide for Minimum Survey Standards." This requirement applies, whether the surveying activity is primary to the contract or task order or incidental to the contract or task order purpose. ITR does not impact mobilization or initiating surveying activities; the parties engaged in data collection remain responsible for appropriate surveying approach and methodologies and as such might be required to provide clarification, adjustments to the methods and data, and recollection.

9.2.2 Survey Report

All A-E contract surveying services shall require a Survey Report to be submitted to Engineering Division Surveys Section for Independent Technical Review within two weeks of completing the surveying activities and office processing. This requirement is independent of any other contractual deadlines. The Survey Report shall be constructed in accordance with the guidelines established in the "USACE New Orleans District Guide for Minimum Survey Standards." This requirement applies, whether the surveying activity is primary to the contract or task order or incidental to the contract or task order purpose. ITR does not impact mobilization or initiating surveying activities; the parties engaged in data collection remain responsible for appropriate surveying approach and methodologies and as such might be required to provide clarification, adjustments to the data, and recollection.

9.2.3 Submittal Format

Both the plan and report shall follow this general outline.

1. Job Number:
2. Contract Number:
3. Lat/Lon:
4. Job Title:
5. General Approach:
6. Horizontal Positioning:
    - 6.1 Datum:
    - 6.2 Control:
    - 6.3 Equipment:
    - 6.4 Methodology:
7. Vertical Positioning:
    - 7.1 Datum:
    - 7.2 Epoch:
    - 7.3 Control:
    - 7.4 Equipment:
    - 7.5 Methodology:

9.3 Adherence to IPET Report Lessons Learned

All A-E contract surveying services shall conform to the following requirements as summarized from the IPET Report, Lessons Learned for Flood Control and Hurricane Protection Projects. All reference datums, surveying methods, benchmarks, and spatial data must be clearly defined and documented. Any questions shall be directed to Engineering Division, Survey Section.

9.3.1 Metadata Embedded Dataset Specification

The metadata embedded dataset specification can be found in Section H at : http://www.mvn.usace.army.mil/ed/edss/USACE_MVN_Min_Survey_Standards.PDF

9.3.2 Dual Elevations on Flood Control and Hurricane Protection Structures

All planning, design, construction, and operation & maintenance inspection documents containing elevation data on flood control structures should show both geodetic and water surface referenced elevations or at a minimum, show the relationship between the geodetic and water surface or local tidal datum. The relative water surface reference datum (i.e., LMSL) is used as the baseline for hydraulic modeling and related levee height design computations. The terrestrial geodetic datum typically used by surveyors for construction stake out and subsequent periodic subsidence modeling must be corrected to be relative to the local water datum. The base gage with its correction to NAVD88 defining a water level datum must be clearly defined, along with applicable tidal or river stage epochs, and conversion parameters to relate water level datums to the local geodetic datum.

9.3.3 Geospatial Data Source Feature or Metadata Records

All planning, design, and construction documents containing survey information shall contain detailed source (i.e., metadata) information on geospatial coordinates or terrain models included in those documents. This would include the location and repository for the original source data, field book numbers, monument descriptions, etc. Geospatial metadata incorporated in documents shall have sufficient detail such that there is no uncertainty (currently or in the future) as to the location of the original data, its origin, and other temporal relationships.

9.3.4 Epoch Designations of Published Topographic Elevations

Reported elevations of surface topography, subsurface bathymetry, and/or constructed structures in high subsidence areas should contain feature (metadata) information on the source datum and applicable adjustment epoch date. This applies to both geodetic elevations (e.g., 12.34 ft NAVD88 (2004.65)) and water

level based elevations (e.g., (-) 5.25 ft LMSL (2000-2005) or 35.0 ft MLLW (1983-2001) or 12.3 ft LWRP (1974)). Hard copy or CADD data files should place this metadata information in the General Notes on the first sheet or digital file of a series, with appropriate references on subsequent sheets/files that depict topographic information and source files names and locations.

9.3.5 Definitions of NGVD29, NAVD88, Mean Sea Level, and Local Mean Sea Level

When referring to the mean water surface at or near a specific flood control project, LMSL should be used. A LMSL derived elevation should clearly identify the water level reference gage location and the time series (epoch) over which the mean surface elevation was computed. NOAA geodetic and tidal datasheets should be modified to clearly indicate orthometric heights/elevations differ from mean sea level elevations.

9.3.6 Coordination of Topographic Survey Data Collection, Processing, and Management

To minimize the confusion associated with several entities producing survey data, all surveys should be coordinated and archived by MVN Survey Section. This would standardize survey methods, survey control, deliverables, etc.

9.3.7 Vertical Control Monumentation Requirements and Stakeout Procedures on Flood Control Construction Projects

A minimum of three (3) permanent benchmarks (new or existing) shall be identified on design and construction drawings for all flood control projects. These marks should be established during the planning and design phase. The marks shall be situated in the middle and at each end of the project. They shall be established relative to existing NAVD88 control established by the NGS, using either conventional differential leveling and/or the latest NGS-approved differential GPS network observations, with appropriate corrections to the local hydraulic design surface. Prior to and during actual construction stake out, these primary reference marks should be verified externally and internally. Field records of these survey verifications shall be permanently archived.

9.3.8 LIDAR and Photogrammetric Mapping Calibration and Testing

Hurricane Protection Projects, requiring accurate, up-to-date topographic detail, should not attempt to utilize older mapping data of uncertain origin, resolution, and accuracy—especially if this data was not reliably quality assured (i.e., ground truthed). Contracts for aerial mapping services must contain quality assurance provisions for calibrating, ground truthing, and testing delivered mapping products. These methods should follow long-established testing methods outlined

in standards such as USACE EM 1110-1-1000 (Photogrammetric Mapping), FGDC, ASPRS, and FEMA.

9.4 Typical Scope of Services for Structural Design Projects

The following outline provides the generally required survey information for typical structural design projects. This list is neither definitive nor all-inclusive.

9.4.1 Vertical and Horizontal Control

Horizontal and vertical controls shall be established in accordance with MVN Survey Section Standards. Establish control points and baselines to use as horizontal reference. All horizontal control should be tied to a USACE baseline.

9.4.2 Boundary Surveys

Research adjoining property owners then locate and tie existing property into horizontal control.

Research and locate aboveground and underground utilities and tie them to the horizontal and vertical controls.

Locate required rights-of-way and construction easements.

9.4.3 Topographic Surveys

Identify above ground features such as roads, canals, fences, buildings, bridges, floodwalls, piers, etc. and tie features to vertical and horizontal control points.

If project includes construction in or adjacent to an existing facility, take measurements and spot elevations to verify existing “as-built” drawings and to identify any deviations in the existing structural, architectural or mechanical features. This may also require under water probing.

9.4.4 Cross-Sections and Profiles

9.4.4.1 Major Structure Site

Cross-sections are typically taken at 25 to 50 ft. intervals perpendicular to the baseline. Intervals will depend on site topography and may include or be continuous with hydrographic surveys.

At any intake and discharge areas where hydraulic modeling is to be required, cross-sections should be no further apart than 25 ft.

Extend cross-sections to provide full coverage of area to include important features such as C/L of pavement, edge of roads, waters edge, drainage ditches, top of bank, etc.

A centerline profile is typically required along the proposed project C/L (structure or roadway). The profile should be extended to include important features and may include or be continuous with hydrographic surveys

9.4.4.2 Levee and Floodwall Sites

Cross-sections are typically taken at 50 to 100 ft. intervals perpendicular to the baseline. Intervals depend on site topography and may include or be continuous with hydrographic surveys.

Extend cross-sections to provide full coverage of area to include important features such as C/L of pavement, edge of roads, waters edge, drainage ditches, top of bank, etc.

10.0 CADD STANDARDS

10.1 General

This section provides guidance for creating detailed engineering CADD products for facilities and civil works projects. Technical specifications, procedural guidance, and quality control criteria are outlined for CADD services performed in a consistent manner for the New Orleans District in support of hurricane and flood protection, hydrologic studies, construction, and mapping projects.

10.2 Applicability

This section applies to all in-house and A-E contract services having responsibility for the planning, engineering and design, operation, maintenance, construction, and related real estate and regulatory functions of civil works, and environmental restoration projects. It is intended for use by other USACE FOAs and Architect-Engineer (A-E) contractors supporting MVN, PRO, HPO, and TFH. It is also applicable to CAD products created or procured by local interest groups under various cooperative or cost-sharing agreements.

10.3 CADD Standards

CADD drawings shall be prepared in accordance with the Architectural/Engineering/Construction (A/E/C) Computer-Aided Design and Drafting (CADD) Standard. CADD drawings shall also adhere to the requirements of the MVD CAD Supplement. MVN CAD Standards may also apply. Where standards are in disagreement, MVN standards shall supersede MVD and the A/E/C standards. Further, MVD standards shall supersede the A/E/C standards.

The contractor may also use cell libraries, seed files, border sheets and line style libraries provided by the Government in addition to those required by the Standard.

Standards and files are available at http://www.mvd.usace.army.mil/cad/.

The Contractor shall submit a written request for approval of any deviations from the Government's established CADD standard. No deviations from the government’s established CADD standard will be permitted unless prior written approval of such deviation has been received from the Government.

10.4 Files Names and Drawing Numbers

Files names and drawing numbers for plans and specifications shall be obtained from Denis J. Beer, P.E. at Denis.J.Beer@usace.army.mil.

10.5 Platforms

All CADD data shall be supplied in Bentley Systems, three-dimensional, MicroStation V8 native electronic digital format (i.e., .dgn, .cel), with a Windows XP operating system target platform. The contractor shall ensure that all digital files and data (e.g., model files, reference files, cell libraries) are compatible with the Government's target CADD system (i.e., basic and advanced CADD software, platform, database software), and adhere to the standards and requirements specified herein. The term “compatible” means that data can be accessed directly by the target CADD system without translation, preprocessing, or postprocessing of the electronic digital data files. It is the responsibility of the contractor to ensure this level of compatibility.

If required, the contractor shall also produce drawings and models that are compatible with InRoads, version 8.05 software. As an option, the Contractor may provide InRoads-compatible ASCII random point and break line files for generation of the DTMs, provided that these files produce DTMs that match the topographic/planimetric survey sheets furnished in MicroStation format. DTMs or point files shall be submitted with the drawings on CD-ROM.

Unless noted otherwise, all elements are to be drawn at elevation 0.0 with the active z-depth set to elevation 0.0. Any digital terrain model contours or related 3D interim design elements may keep their proper elevations. All plan view area linework and aerial digital photography shall maintain horizontal control as provided by the government and shall not be moved out of their proper State Plane NAD83 datum position. Each plate shall be in its own individual CADD file and each CADD file shall contain all elements (i.e. there shall not be multiple reference files for a single plate).

Any supplied scanned electronic digital files of georeferenced data shall be delivered in georeferenced TIFF format in the North American Datum 1983 (NAD83), State Plane Coordinate System, and appropriate Zone corresponding to the data location. All other scanned electronic digital files shall be delivered in the native MicroStation digital format which is fully compatible with Bentley System's Descartes 2004 Edition software.

Any nongraphical databases delivered with prepared drawings shall be in Oracle or Microsoft Access compatible format. The database version delivered shall be compatible with the Government's target CADD system. All linkages of nongraphical data with graphic elements, relationships between database tables, and report formats shall be maintained. All database tables shall conform to the structure and field-naming guidance provided by the Government.

10.6 Deliverables

A copy of all CADD data and files developed under this contract shall be delivered to the Government on electronic digital media as an attachment with each submittal as required in the Schedule of Work. The electronic digital media shall be developed and submitted in the Government's target CADD system.

The external label for each electronic digital media shall contain, as a minimum, the following information:

(1) The Contract Number (and Delivery Order Number if applicable) and date.

(2) The format and version of operating system software.

(3) The sequence number of the digital media.

Before a CADD file is placed on the delivery electronic digital media, the following procedures shall be performed:

(1) Remove all extraneous graphics outside the border area.

(2) Remove any unused references from files.

(3) Make sure all reference files are attached without device or directory specifications.

(4) Include all files, both graphic and nongraphic, required for the project (i.e., color tables, pen tables, font libraries, cell libraries, user command files, plot files). All files not provided as Government furnished materials must be provided to the Government as a part of the electronic digital deliverables.

(5) Make sure that all support files such as those listed above are in the same directory and that references to those files do not include device or directory specifications.

(6) Include any standard sheets (i.e., abbreviation sheets, standard symbol sheets) necessary for a complete project.

(7) Document any fonts, tables, etc., developed by the A-E or not provided among the Government furnished materials. The contractor shall obtain Government approval before using anything other than the Government's standard fonts, linetypes, tables, or cells.

(8) Provide in a Microsoft Word file a list of drawing file names.

10.7 Drawing Development Documentation

Complete documentation concerning the development of each finished drawing shall be included in the drawing outside of the border. This documentation shall include the following:

(1) How the data were input (e.g., keyed in, downloaded from a survey total station instrument (include name and model)).

(2) Brief drawing development history (e.g., date started, modification date(s) with brief description of item(s) modified, author's name).

(3) The names of the reference files, cells, symbols, details, tables, and schedule files required for the finished drawing.

(4) Level assignments and lock settings.

(5) Text fonts, line styles used, and pen settings.

10.8 Ownership

The Government, for itself and such others as it deems appropriate, will have unlimited rights under this contract to all information and materials developed under this contract and furnished to the Government and documentation thereof, reports, and listings, and all other items pertaining to the work and services pursuant to this agreement including any copyright. Unlimited rights under this contract are rights to use, duplicate, or disclose text, data, drawings, and information, in whole or in part in any manner and for any purpose whatsoever without compensation to or approval from the Contractor. The Government will at all reasonable times have the right to inspect the work and will have access to and the right to make copies of the above-mentioned items. All text, electronic digital files, data, and other products generated under this contract shall become the property of the Government. By reference, the following DFAR clauses are included in this contract as a part of the requirements herein:

a. DFAR 252.227-7013, “Rights in Technical Data - Noncommercial Items.”

b. DFAR 252.227-7017, “Identification and Assertion of Use, Release, or Disclosure Restrictions.”

c. DFAR 252.227-7020, “Rights in Special Works.”

d. DFAR 252.227-7028, “Technical Data or Computer Software Previously Delivered to the Government.”

e. DFAR 252.227-7037, “Validation of Restrictive Markings on Technical Data.”

f. DFAR 252.227-7025, “Limitations on the Use or Disclosure of Government-Furnished Information Marked with Restrictive Legends.”

g. DFAR 252.227-7014, “Rights in Noncommercial Computer Software and Noncommercial Computer Software Documentation.”

Copyright: Any software and computer data/information developed as a component of this contract shall have the following statement attached to documentation:

“This computer program is a work effort for the United States Government and is not protected by copyright (17 U.S. Code 105). Any person who fraudulently places a copyright notice on, or does any other act contrary to the provisions of 17 U.S. Code 506(c) shall be subject to the penalties provided therein. This notice shall not be altered or removed from this software or digital media, and is to be on all reproductions.”

11.0 SIGNATURES

A sample signature page used by MVN follows.

U. S. ARMY ENGINEER DISTRICT, NEW ORLEANS
CORPS OF ENGINEERS
NEW ORLEANS, LOUISIANA

[Project Name]
[Project Location], Louisiana
Solicitation No. XXXXX
File No. XXXXX
Dwgs. X through X

This Project was designed by [the firm of XXXXX or XXXXX district]. The initials or signatures and registration designations are for the New Orleans District of the U.S. Army Corps of Engineers. USACE employees appearing on these project documents are within the scope of their employment as required by ER1110-1-8152.

The following are the official written record of signatures required by ER1110-1-8152 for the above job so as to facilitate electronic bid sets (EBS).

SUBMITTED BY: _____ Date _____
Design Engineer

SUBMITTED BY: _____ Date _____
Functional Team Leader

SUBMITTED BY: _____ Date _____
Chief, Civil Branch

APPROVED BY: _____ Date _____
Chief, Engineering Division

APPROVED BY: _____ Date _____
Colonel, C.E. District Engineer

12.0 TYPICAL DRAWINGS AND DETAILS

GENERAL NOTES:

1. AZIMUTHS SHOWN ARE MEASURED CLOCKWISE FROM THE NORTH.
2. ELEVATIONS ARE IN FEET AND REFER TO NAVD88 (2004.65).
3. DIMENSIONS AND/OR ELEVATIONS MARKED THUS (±) ARE APPROXIMATE. CONTRACTOR SHALL VERIFY ACTUAL DIMENSIONS IN THE FIELD.
4. DIMENSIONS AND/OR ELEVATIONS MARKED THUS (NTS) ARE NOT SHOWN TO SCALE
5. DRAWINGS ARE GENERALLY TO SCALE, BUT SHOULD NOT BE SCALED. NTS IS SHOWN ONLY WHERE DRAWING IS OBVIOUSLY OUT OF SCALE.
6. BENCH MARKS AND BASE LINES HAVE BEEN ESTABLISHED AT THE SITE BY THE GOVERNMENT.
7. FOR BORING LOGS, SEE DWGS. XX-XX.

STEEL NOTES:

1. ALL STRUCTURAL STEEL SHALL BE ASTM A36, UNLESS OTHERWISE NOTED.
2. TO PREVENT CORROSION BY MOISTURE BETWEEN STEEL SURFACES IN CONTACT, ALL SUCH CONTACTS SHALL BE SEALED WATERTIGHT BY RUNNING A CONTINUOUS ⅛" FILLET WELD ALONG ALL EDGES OF THE CONTACT, UNLESS OTHERWISE NOTED.
3. ALL WELDING SHALL BE ELECTRIC WELDING, WORKMANSHIP AND TECHNIQUE, WHERE APPLICABLE, SHALL CONFORM TO THE AMERICAN WELDING SOCIETY STRUCTURAL WELDING CODE, SEE SPECIFICATIONS.
4. WELDING SYMBOLS SHOWN ARE THOSE ADOPTED BY THE AMERICAN WELDING SOCIETY AND INDICATE ONLY SIZE AND TYPE OF WELDS REQUIRED. DETAILED INFORMATION SHALL BE SHOWN ON THE SHOP DRAWINGS AND SUBMITTED BY THE CONTRACTOR FOR APPROVAL.
5. DIMENSIONS SHOWN OR CALLED FOR ARE THE FINAL DIMENSIONS; ALLOWANCES MUST BE MADE FOR MACHINING.
6. ITEMS MARKED C.R.S. SHALL BE CORROSION-RESISTANT STEEL (STAINLESS STEEL), SEE SPECIFICATIONS.

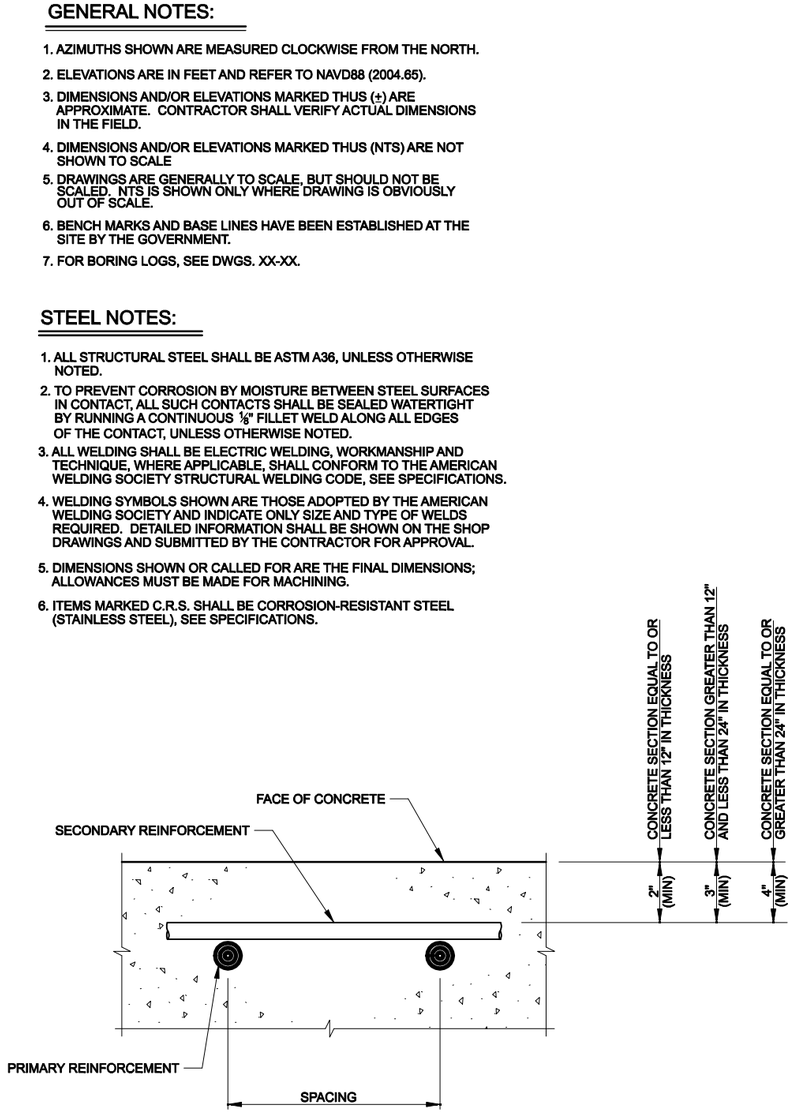

REINFORCEMENT CLEARANCE DETAIL

NTS

SECTION OR DETAIL SYMBOL

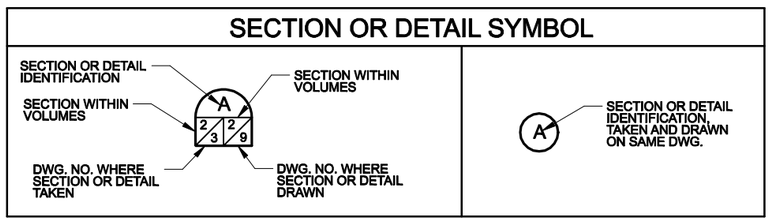

CONCRETE NOTES:

1. CONCRETE SHALL HAVE A MINIMUM COMPRESSIVE STRENGTH (f'c) OF XXXX PSI AT 28 DAYS, 90 DAYS IF POZZOLAN IS USED, UNLESS OTHERWISE NOTED.
2. STABILIZATION SLAB CONCRETE SHALL HAVE A MINIMUM COMPRESSIVE STRENGTH (f'c) OF 2500 PSI AT 28 DAYS, 90 DAYS IS POZZOLAN IS USED.
3. REINFORCING STEEL SHALL HAVE A MINIMUM YIELD STRENGTH (Fy) OF 60,000 PSI.
4. REINFORCING SHALL BE SPACED TO MISS RECESSES FOR GATE LATCHES.
5. CONSTRUCTION JOINTS SHALL BE PROVIDED WHERE SHOWN ON THE DRAWINGS. WHERE NOT SHOWN, CONSTRUCTION JOINTS SHALL BE PLACED AT LOCATIONS LEAST LIKELY TO IMPAIR THE INTEGRITY OF THE CONCRETE STRUCTURE. THESE ADDITIONAL CONSTRUCTION JOINT LOCATIONS SHALL BE APPROVED BY THE CONTRACTING OFFICER.
6. UNLESS OTHERWISE NOTED, PROVIDE ¾" CHAMFER AT ALL EXPOSED JOINTS, EDGES, EXTERNAL CORNERS, AND VERTICAL EXPANSION JOINTS.
7. RESERVED
8. ALL BENDS OF REINFORCEMENT AND ALL BAR SPACERS AND SUPPORTS SHALL BE IN ACCORDANCE WITH SP-66, AMERICAN CONCRETE INSTITUTE DETAILING MANUAL - 1994.
9. REINFORCING BAR DESIGNATION NUMBERS CONFORM TO THE NUMBERING SYSTEM OF THE CONCRETE REINFORCING STEEL INSTITUTE.
10. REINFORCING BARS SHALL BE CONTINUOUS AT ALL CORNERS UNLESS OTHERWISE NOTED.
11. REINFORCEMENT, WHERE NECESSARY TO AVOID OPENINGS, PIPES, EMBEDDED ITEMS AND OTHER OBSTRUCTIONS, SHALL BE BENT OR SHIFTED AS DIRECTED BY THE CONTRACTING OFFICER.
12. THE EMBEDMENT AND SPLICE TABLE SHALL BE USED IN DETERMINING LAP SPLICES AND EMBEDMENT LENGTHS WHERE LENGTHS ARE NOT OTHERWISE INDICATED. SPLICE LENGTHS SHALL BE BASED ON THE SMALLER BAR BEING LAPPED. THE CONTRACTOR WILL BE ALLOWED TO MAKE SPLICES IN ADDITION TO THOSE INDICATED IN THE DRAWINGS, WHERE ESSENTIAL TO CONSTRUCTIBILITY, SUBJECT TO APPROVAL BY THE CONTRACTING OFFICER. SPLICES OTHER THAN THOSE SHOWN ON THE DRAWINGS AND OTHER THAN ANY ADDITIONAL SPLICES REQUIRED BY THE CONTRACTING OFFICER, WILL BE AT THE CONTRACTOR'S EXPENSE.
13. ALL EXTERIOR FORMED SURFACES NOT COVERED BY BACKFILL SHALL BE CLASS "A" FINISH AND SURFACES COVERED BY BACKFILL SHALL BE CLASS "D" FINISH, UNLESS OTHERWISE NOTED.
14. FOR "T-WALL" CONCRETE PLACEMENT, THE CONTRACTOR SHALL EITHER PLACE A CONSTRUCTION JOINT AT APPROXIMATELY MID-WALL HEIGHT OR SHALL EMPLOY TEMPORARY "WINDOWS" IN THE FORMS TO FACILITATE CONCRETE PLACEMENT AND CONSOLIDATION.

REINFORCEMENT EMBEDMENT AND SPLICE TABLES - 3000 PSI

BAR SIZE	BASIC TABLE				ALTERNATE TABLE			
	MINIMUM EMBEDMENT LENGTH, INCHES		MINIMUM LAP LENGTH INCHES		MINIMUM EMBEDMENT LENGTH, INCHES		MINIMUM LAP LENGTH INCHES	
	TOP	OTHER	TOP	OTHER	TOP	OTHER	TOP	OTHER
3	21	16	28	21	13	12	17	13
4	28	22	37	28	17	13	22	17
5	36	27	46	36	21	16	28	21
6	43	33	56	43	26	20	33	26
7	62	48	81	62	37	29	49	37
8	71	55	93	71	43	33	44	43
9	80	62	104	80	48	37	50	48
10	89	68	116	89	53	41	56	53
11	98	75	127	98	59	45	61	59

REINFORCEMENT EMBEDMENT AND SPLICE TABLES - 4000 PSI

BAR SIZE	BASIC TABLE				ALTERNATE TABLE			
	MINIMUM EMBEDMENT LENGTH, INCHES		MINIMUM LAP LENGTH INCHES		MINIMUM EMBEDMENT LENGTH, INCHES		MINIMUM LAP LENGTH INCHES	
	TOP	OTHER	TOP	OTHER	TOP	OTHER	TOP	OTHER
3	18	14	24	18	12	12	14	12
4	25	19	32	25	15	12	19	15
5	31	24	40	31	18	14	24	18
6	37	28	48	37	22	17	29	22
7	54	42	70	54	32	25	42	32
8	62	47	80	62	37	28	48	37
9	69	53	90	69	42	32	54	42
10	77	59	100	77	46	36	60	46
11	85	65	110	85	51	39	66	51

NOTES:

1. USE THE BASIC TABLE IF ALL THE FOLLOWING CONDITIONS ARE MET:
   A) CENTER-TO-CENTER BAR SPACING LATERALLY IS AT LEAST 3 BAR DIAMETERS.
   B) DISTANCE FROM THE CENTER OF A BAR TO THE NEAREST CONCRETE SURFACE MUST BE AT LEAST 2 BAR DIAMETERS.
2. THE ALTERNATE TABLE MAY BE USED IF ALL OF THE FOLLOWING CONDITIONS ARE MET:
   A) CENTER-TO-CENTER BAR SPACING LATERALLY IS AT LEAST 5 BAR DIAMETERS.
   B) DISTANCE FROM THE CENTER OF A BAR TO THE NEAREST CONCRETE SURFACE MUST BE AT LEAST 2.5 BAR DIAMETERS.
3. IF CONCRETE COVER OR EDGE DISTANCE IS LESS THAN 1 BAR DIAMETER OF THE CENTER-TO-CENTER BAR SPACING LATERALLY IS LESS THAN 3 BAR DIAMETERS, SEE ACI 318 FOR APPROPRIATE GUIDANCE.
4. TOP BARS ARE HORIZONTAL BARS AND BARS INCLINED LESS THAN 45 DEGREES WITH RESPECT TO A HORIZONTAL PLANE WHICH ARE PLACED SUCH THAT MORE THAN 12 INCHES OF CONCRETE IS CAST IN THE MEMBER BELOW THE BAR.
5. THE TABLES SHOWN ABOVE ARE FOR NORMAL WEIGHT CONCRETE AND UNCOATED REINFORCING BARS. IF EPOXY-COATED BARS ARE USED, SEE ACI 318 FOR ADDITIONAL CONSIDERATIONS.

ABBREVIATIONS

ALT. SP.	= ALTERNATE SPACING
AZ	= AZIMUTH
B/L	= BASELINE
BF	= BOTTOM FACE
BL	= BOTTOM LAYER
C	= CENTER
CB	= CATCH BASIN
C.I.	= CAST IRON
CJ	= CONSTRUCTION JOINT
CL	= CLEAR COVER
C/L OR ℄	= CENTER LINE
C.R.S.	= CORROSION-RESISTANT STEEL
Ø	= DIAMETER
D	= DRAIN
D.I.	= DROP INLET
D.P.	= DRAIN PIPE
D/S	= DOWNSTREAM
D.V.	= DRAIN VALVE
D.V. MH.	= DRAIN VALVE MANHOLE
E	= ELECTRICAL
EF	= EACH FACE
EL.	= ELEVATION
ES	= EQUALLY SPACED
F.H.	= FIRE HYDRANT
FF	= FAR FACE
FS	= FAR SIDE
G	= GAS
H.S.	= HIGH STRENGTH
LP	= LIGHT POLE
LS	= LIGHT STANDARD
MH	= MANHOLE
NF	= NEAR FACE
NS	= NEAR SIDE
N.T.S.	= NOT TO SCALE
O.C.	= ON CENTER
OPT.	= OPTIONAL
OS	= OFFSET
P	= POWER
P.C.	= POINT OF CURVATURE
P.T.	= POINT OF TANGENCY
S	= SEWER
SB/L	= SUBBASELINE
S.C.O.	= SEWER CLEANOUT
STD. HK.	= STANDARD HOOK
STA.	= STATION
T	= TELEPHONE
TD	= TRENCH DRAIN
TF	= TOP FACE
TEL.M.H.	= TELEPHONE MANHOLE
TL	= TOP LAYER
TP	= TEST PILE
U.O.N.	= UNLESS OTHERWISE NOTED
U/S	= UPSTREAM
W	= WATER
W/L	= WALL LINE
W.M.	= WATER METER
W.V.	= WATER VALVE

US Army Corps of Engineers®
NEW ORLEANS DISTRICT

MARK	DESCRIPTION	DATE	APPR.

U.S. ARMY CORPS OF ENGINEERS
NEW ORLEANS DISTRICT
NEW ORLEANS, LOUISIANA

DESIGNED BY: USACE - NEW ORLEANS
DWN BY:
CKD BY:
SUBMITTED BY:
DATE: MAY 2008
SOLICITATION NO.:
CONTRACT NO.:
PLOT SCALE: 1/2" = 1"
PLOT DATE:
FILE NUMBER: A&E TYPICALS
SIZE: ANSI D
FILE NAME: AE-TYP01.DGN

USACE - NEW ORLEANS
HURRICANE DESIGN GUIDELINES
A/E TYPICAL DRAWINGS
~
GENERAL DRAWINGS
GENERAL NOTES
~

SHEET IDENTIFICATION
X-00

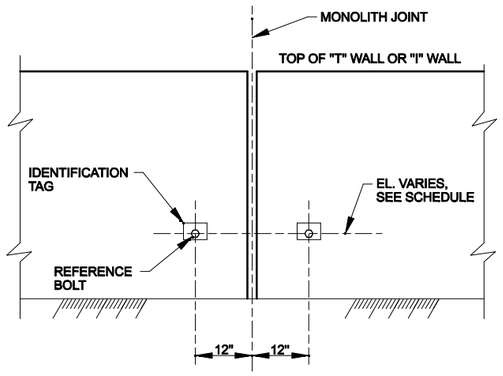

PROTECTED SIDE

TYPICAL ELEVATION OF SETTLEMENT REFERENCE MARKER

SCALE: 3/4" = 1'- 0"

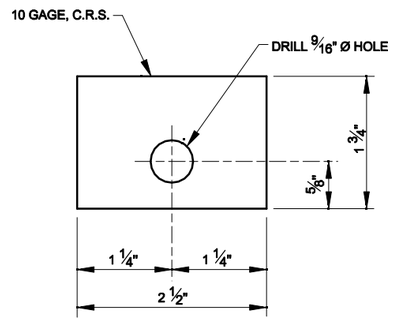

IDENTIFICATION TAG

SCALE: 1" = 1' - 0"

SETTLEMENT REFERENCE MARKER SCHEDULE

S.R.M. NO.	W/L STATION * (C/L MONOLITH JOINT)	ELEVATION * *

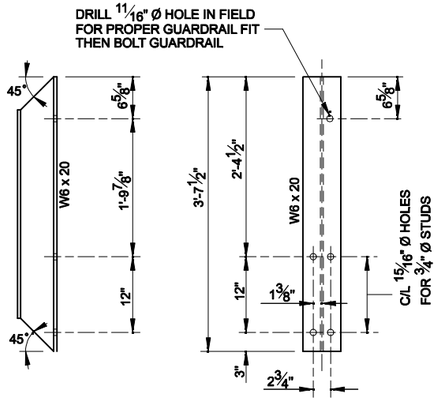

BRIDGE GUARDRAIL POST DETAIL

SCALE: 1" = 1'- 0"

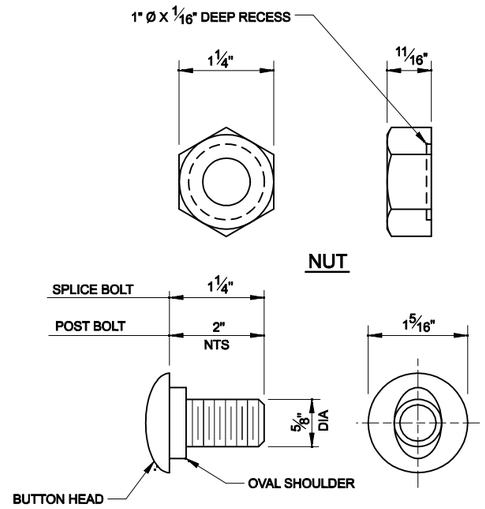

BUTTON HEAD BOLT

GUARDRAIL SPLICE BOLT AND POST BOLT

SCALE: 1" = 1' - 0"

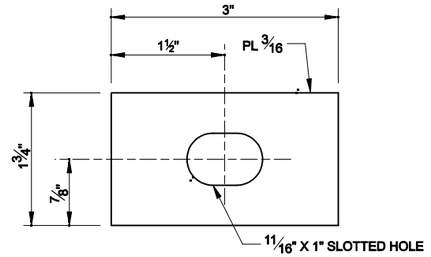

PLATE WASHER

SCALE: 1" = 1' - 0"

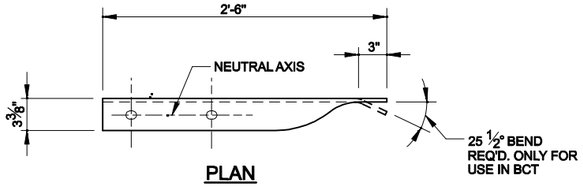

PLAN

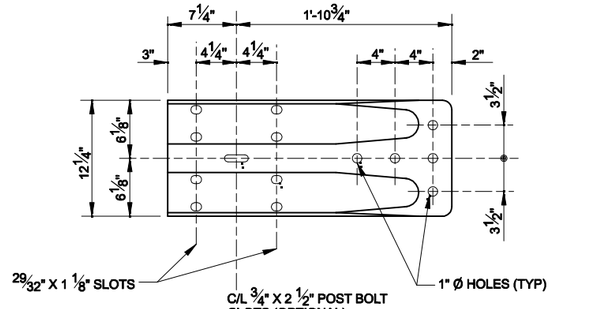

ELEVATION

W BEAM TERMINAL CONNECTOR

SCALE: 1 1/2" = 1' - 0"

NOTE:

ALL RAIL COMPONENTS EXCEPT THE W AND THRIE BEAM TERMINAL CONNECTORS SHALL MEET AASHTO M-180, CLASS A METAL THICKNESS WITH A TYPE II COATING. THE W BEAM AND THRIE BEAM TERMINAL CONNECTORS SHALL BE CLASS B METAL THICKNESS WITH TYPE II COATING.

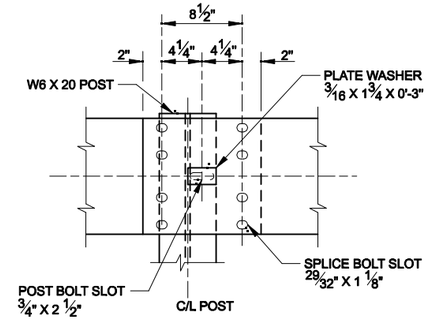

NOTE: LAP IN DIRECTION OF TRAFFIC.

ELEVATION

W BEAM SPLICE DETAIL - W6 POST

SCALE: 1 1/2" = 1' - 0"

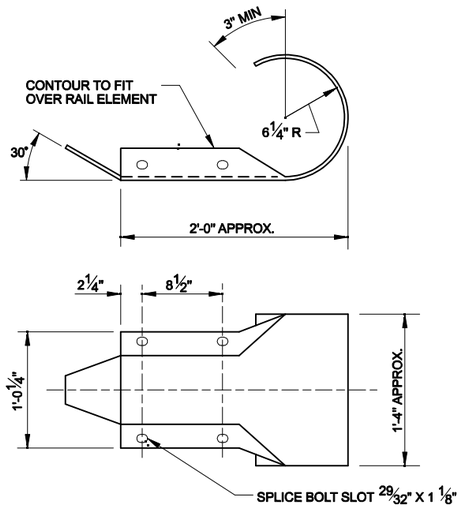

W BEAM END SECTION (ROUNDED)

SCALE: 1 1/2" = 1' - 0"

SCALE: 1"=1"
0 1' 2'

SCALE:1-1/2"=1'
0 6" 1' 2'

SCALE: 6"=1'
0 3" 6" 9" 12"

US Army Corps of Engineers
NEW ORLEANS DISTRICT

MARK	DESCRIPTION	DATE	APPR.

MARK	DESCRIPTION	DATE	APPR.

DESIGNED BY: USACE - NEW ORLEANS
DWN BY:
SUBMITTED BY:
DATE: MAY 2008
SOLICITATION NO.:
CONTRACT NO.:
FILE NUMBER: A/E TYPICALS
PLOT SCALE:
PLOT DATE:
FILE NAME: AE-TYPDLGN
SIZE: ANSI D

U.S. ARMY CORPS OF ENGINEERS
NEW ORLEANS DISTRICT
NEW ORLEANS, LOUISIANA

USACE - NEW ORLEANS
HURRICANE DESIGN GUIDELINES
A/E TYPICAL DRAWINGS
-
GENERAL DRAWINGS
GUARDRAIL DETAILS
(1 OF 2)

SHEET IDENTIFICATION
X-00

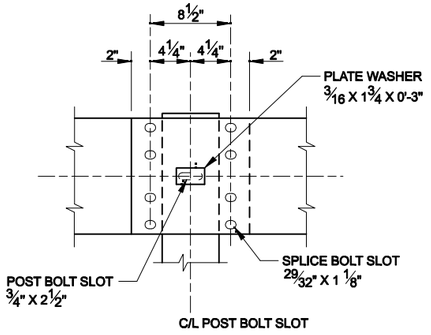

NOTE: LAP IN DIRECTION OF TRAFFIC.

ELEVATION

W BEAM SPLICE DETAIL - WOOD POST

SCALE: 1 ½" = 1' - 0"

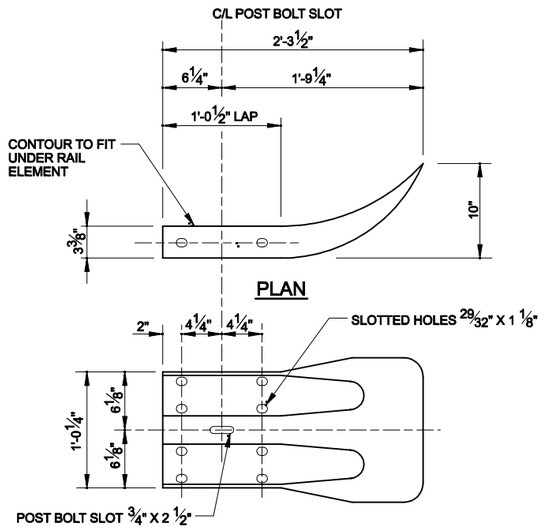

ELEVATION

W BEAM END SECTION (FLARED)

SCALE: 1 ½" = 1' - 0"

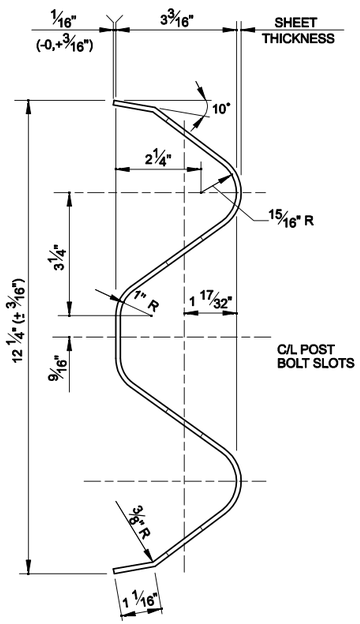

W BEAM - SECTION

SCALE: 6" = 1' - 0"

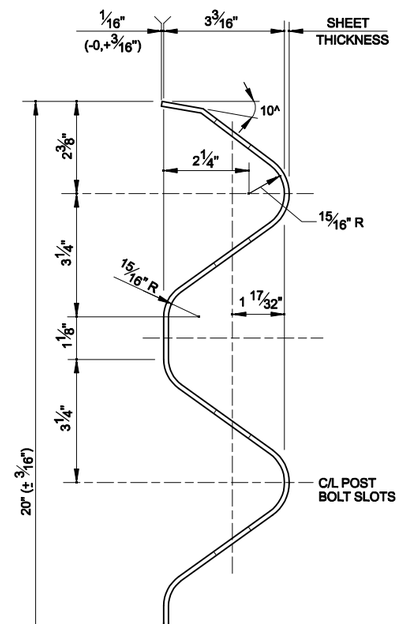

THRIE BEAM - SECTION

SCALE: 6" = 1' - 0"

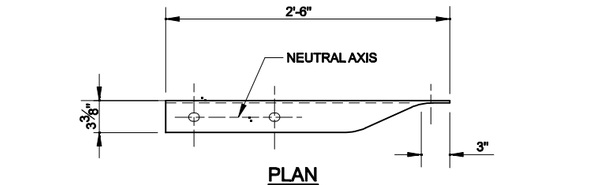

PLAN

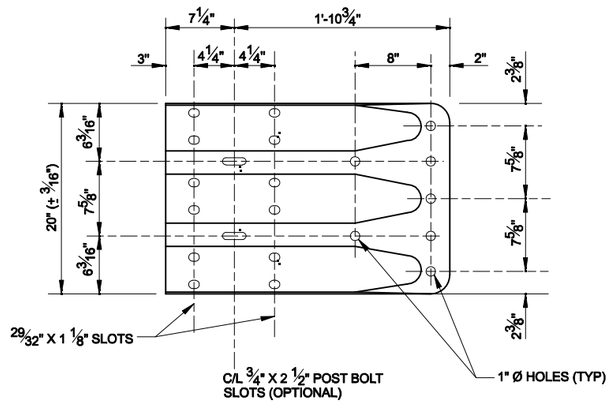

ELEVATION

THRIE BEAM TERMINAL CONNECTOR

SCALE: 1 ½" = 1' - 0"

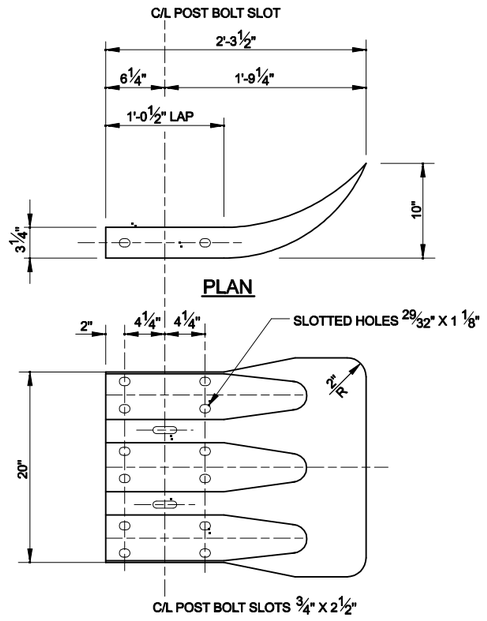

ELEVATION

FLARED END SECTION FOR THRIE BEAM

SCALE: 1 ½" = 1' - 0"

SCALE:1-1/2"=1'

0 6" 1' 2'

SCALE: 6"=1'

0 3" 6" 9" 12"

US Army Corps of Engineers®
NEW ORLEANS DISTRICT

MARK	DESCRIPTION	DATE	APPR.
MARK	DESCRIPTION	DATE	APPR.

U.S. ARMY CORPS OF ENGINEERS
NEW ORLEANS DISTRICT
NEW ORLEANS, LOUISIANA

DESIGNED BY: USACE - NEW ORLEANS
DWN BY:
SUBMITTED BY:
CK'D BY:
PLOT SCALE:
PLOT DATE:
SIZE: ANSI D
FILE NAME: AE-TYPXLDGN
DATE: MAY 2008
SOLICITATION NO.:
CONTRACT NO.:
FILE NUMBER: A/E TYPICALS

USACE - NEW ORLEANS
HURRICANE DESIGN GUIDELINES
A/E TYPICAL DRAWINGS
-
GENERAL DRAWINGS
GUARDRAIL DETAILS
(2 OF 2)

SHEET IDENTIFICATION
X-00

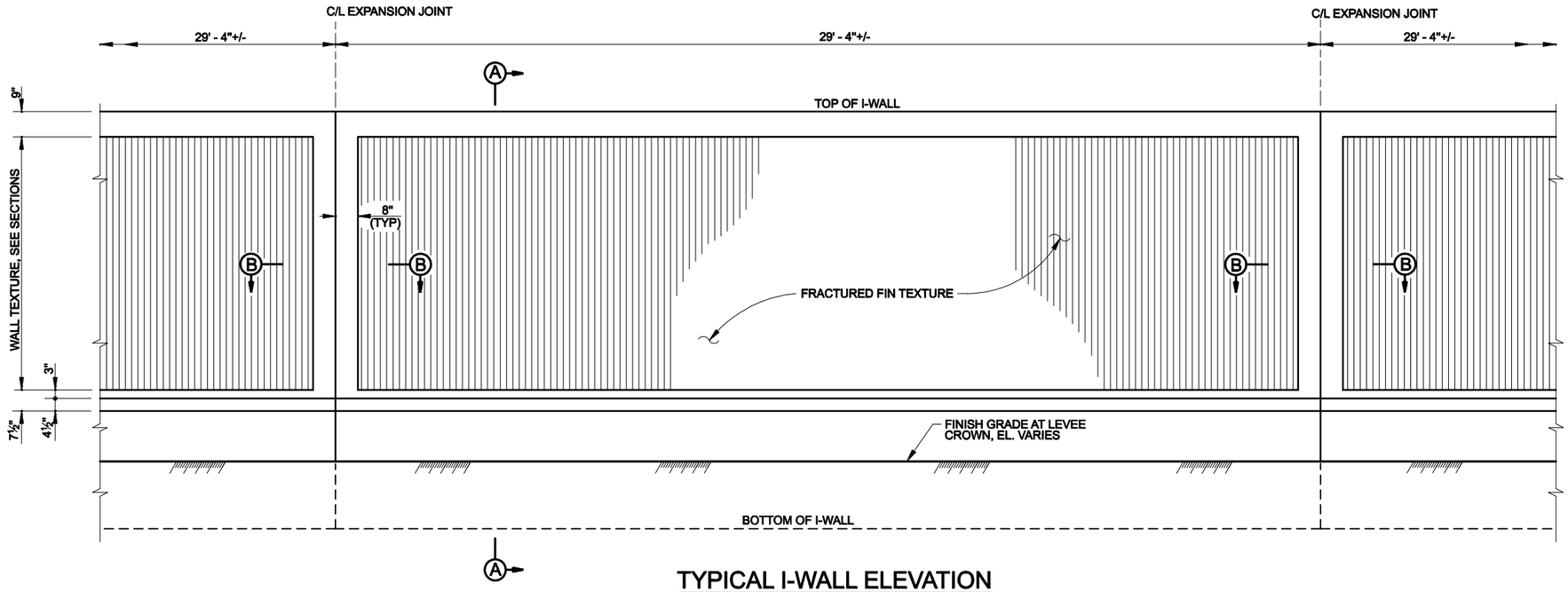

TYPICAL I-WALL ELEVATION

PROTECTED SIDE TEXTURE FINISH

SCALE: ½ " = 1'- 0"

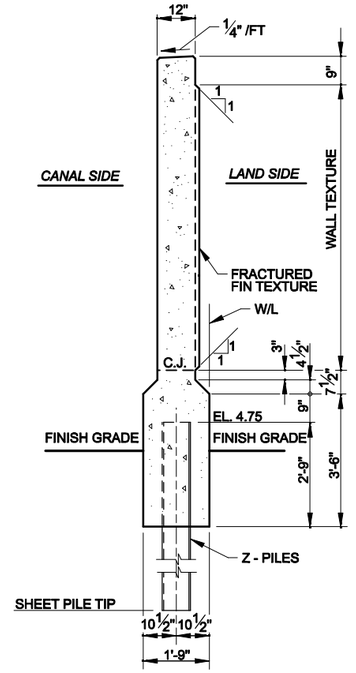

SECTION Ⓐ

SCALE: ½ " = 1'- 0"

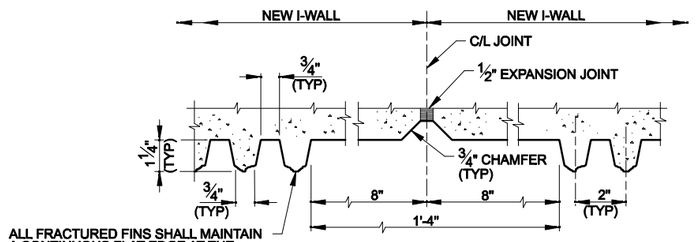

SECTION Ⓑ

TYPICAL TEXTURE AT EXPANSION JOINTS

NTS

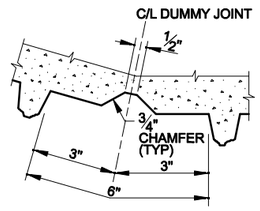

SPECIAL TEXTURE AT P.I.

NTS

NOTES:

1. ALL FORM TIE BOLTS SHALL BE PLACED IN THE VALLEY OF THE FRACTURED FIN TEXTURE (i.e., BETWEEN ADJACENT FINS).
2. CONTRACTOR SHALL MAKE ALL EFFORTS TO MINIMIZE THE OCCURRENCE OF BUTT JOINTS. CONTRACTOR SHALL SUBMIT, FOR PRIOR APPROVAL, DRAWINGS SHOWING THE LOCATION OF ALL BUTT JOINTS IN FORMS USED FOR CONSTRUCTION.
3. NO ARCHITECTURAL FINISH ON CANAL SIDE.

SCALE:1/2"=1'

0 1' 2' 4'

US Army Corps of Engineers®
NEW ORLEANS DISTRICT

MARK	DESCRIPTION	DATE	APPR.

MARK	DESCRIPTION	DATE	APPR.

U.S. ARMY CORPS OF ENGINEERS
NEW ORLEANS DISTRICT
NEW ORLEANS, LOUISIANA

DESIGNED BY: USACE - NEW ORLEANS
DWN BY:
SUBMITTED BY:
DATE: MAY 2008
CKD BY:
PLOT SCALE: 1/2" = 1'
SIZE: ANSI D
SOLICITATION NO.:
CONTRACT NO.:
PLOT DATE:
FILE NAME: AE-TYPXLDSN
FILE NUMBER: A/E TYDCAS

USACE - NEW ORLEANS
HURRICANE DESIGN GUIDELINES
A/E TYPICAL DRAWINGS
-
GENERAL DRAWINGS
ARCHITECTURAL FINISH
-

SHEET IDENTIFICATION
X-00

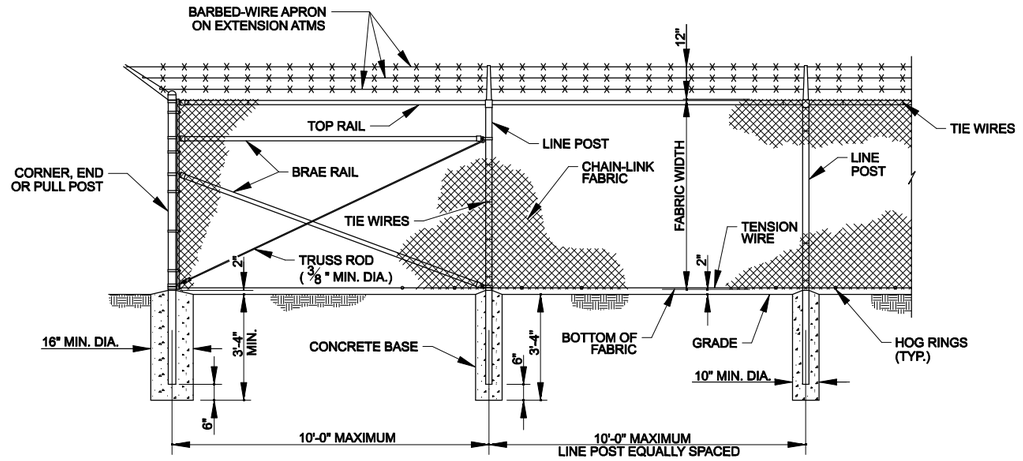

CHAIN - LINK SECURITY FENCE DETAIL

NTS

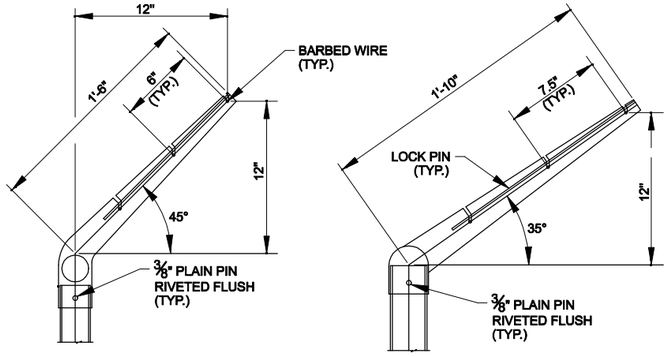

LINE POST CORNER POST

NOTES:

1. DETAILS SHOWN ARE TO CLARIFY REQUIREMENTS AND ARE NOT INTENDED TO LIMIT OTHER TYPES OF FENCE SECTIONS AND METHODS OF INSTALLATION.
2. WIRE TIES, RAILS, POSTS, AND BRACES SHALL BE CONSTRUCTED ON THE SECURE SIDE OF THE FENCE ALIGNMENT. CHAIN-LINK FABRIC SHALL BE PLACED ON THE OPPOSITE SIDE OF THE SECURE AREA.
3. FENCE FRAMEWORK AND ACCESSORIES SHALL COMPLY WITH CLFMI "INDUSTRIAL STEEL GUIDE FOR FENCE RAILS, POSTS, GATES AND ACCESSORIES", AND SHALL BE AS SPECIFIED BELOW AND CONFORM TO THE LATEST REQUIREMENTS OF ASTM F 626.

EXTENSION ARM DETAILS

NTS

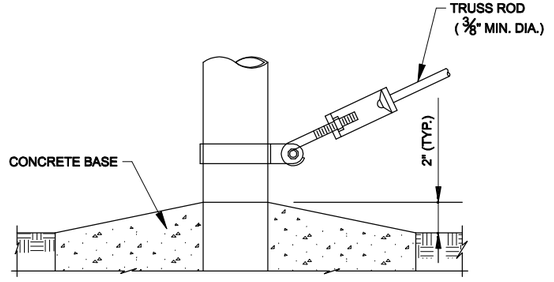

TRUSS ROD AND BAND

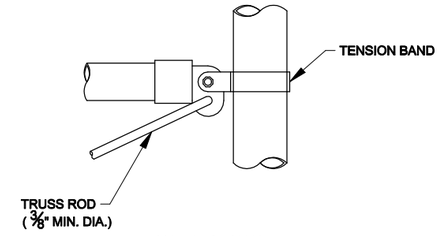

ROUND POST

FENCE NOTES

1. FENCE HEIGHT = 8'-0" W/ BARBED WIRES.
2. DOUBLE SWING GATE = 8'-0" HIGH W/ BARBED WIRES.
3. FENCE FABRIC SHALL BE 2" HOT-DIP GALVANIZED STEEL MESH, HEIGHT OF 96", 34-1/2 DIAMOND COUNT WITH TWISTED EDGES. FABRIC SHALL COMPLY WITH THE CHAIN LINK FENCE MANUFACTURER'S INSTITUTE (CLFMI) "STANDARD GUIDE FOR METALLIC-COATED STEEL CHAIN LINK FENCE AND FABRIC". TOP SELVAGE SHALL BE TWISTED AND BOTTOM SELVAGE SHALL BE KNUCKLED.
4. FENCE FABRIC TO BE CONNECTED TO POST END, CORNER AND GATE WITH 1/4" X 3/4" GALVANIZED STEEL TENSION BARS AND #14 GAGE (MIN.) X 1 GALVANIZED STEEL TENSION BANDS SPACED 15" O.C. SPACED 15" O.C. (MAX.). TOP AND BOTTOM EDGE TO BE TIED (MAX) TO THE CONTINUOUS #6 GAGE TENSION WIRE WITH #9 GAGE ALUMINUM HOG RINGS SPACED 24" O.C. (MAX.). FABRIC TO BE ATTACHED TO LINE POST WITH #9 GAGE ALUMINUM TIE WIRES SPACED 15" O.C. (MAX.).
5. STEEL FENCE POST:
   A. LINE POSTS: TYPE I, ROUND 2.375 INCH O.D. (3.65 LBS. PER FT.) HOT-DIP GALVANIZED INSIDE AND OUT, SPACED AS SHOWN ON DRAWINGS.
   B. END CORNER OR PULL POSTS: TYPE I, ROUND 2.375 INCH O.D. (3.65 LBS. PER FT.) HOT-DIP GALVANIZED INSIDE AND OUT. GATE POSTS SHALL HAVE DOME STYLE POST CAPS.
   C. TOP RAILS: 1.625 INCH O.D. (2.27 LBS. PER FT.) HOT-DIP GALVANIZED INSIDE AND OUT.
6. BRACING FOR END, CORNER AND GATE POSTS SHALL BE 1 1/4" STEEL PIPE (SCH. 40) (1.66" O.D.) HOT-DIP GALVANIZED INSIDE AND OUT. BRACING PIPE TO EXTEND FROM END, CORNER AND GATE POSTS TO FIRST LINE POST. PROVIDE 3/8" Ø GALVANIZED ADJUSTABLE TRUSS ROD FROM THE END OF THE BRACE AND FASTENED TO THE END OF THE BRACE AND FASTENED TO EACH POST WITH GALVANIZED PRESSED STEEL FITTINGS.
7. BOTTOM TENSION WIRE SHALL BE CONTINUOUS #6 GAGE GALVANIZED COIL SPRING TENSION WIRE.
8. BARBED WIRE SHALL BE THREE STRANDS, FOUR POINT PATTERN, EACH STRAND COMPOSED OF TWO TWISTED 12 1/2 GAGE STEEL LINE WIRES, GALVANIZED AFTER TWISTING.
9. BARBED WIRE ARMS SHALL BE PRESSED STEEL OR MALLEABLE IRON, AND HOT-DIP GALVANIZED. EACH ARM SHALL CARRY THREE (3) BARBED WIRES SECURELY FASTENED. ARMS SHALL BE SECURELY FASTENED TO ALL POST AND SET AT 45^ ANGLE OUTSIDE OF THE FENCE LINE.
10. GATE POST SHALL BE EXTENDED TO RECEIVE THREE (3) STRANDS OF BARBED WIRE, FASTENED BY TENSION BANDS AND SHALL BE CAPPED.
11. ALL FITTINGS SHALL BE MALLEABLE IRON OR HEAVY PRESSED STEEL CONSTRUCTION AND HOT-DIP GALVANIZED.
12. GATES SHALL HAVE WELDED FRAMES USING TYPE I, ROUND 2.375 INCH O.D. (3.65 LBS. PER FT.)1 HOT-DIP GALVANIZED INSIDE AND OUT (AFTER FABRICATION).
    PROVIDE HORIZ. BRACE USING 1 1/2" STEEL PIPE (SCH. 40) (1.90"O.D.)
    HOT-DIP GALVANIZED INSIDE AND OUT AND SPACED MIDWAY BETWEEN THE TOP RAIL AND BOTTOM RAIL. VERTICAL MEMBERS SHALL BE EXTENDED TO RECEIVE THREE (3) STRANDS OF BARBED WIRE AND SHALL BE CAPPED.
13. GATE FABRIC SHALL BE THE SAME AS FENCE FABRIC. PROVIDE TENSION BARS AND TENSION BANDS. ALSO #9 GAGE ALUMINUM TIE WIRES AT TOP AND BOTTOM EDGES, SPACED 12" O.C. (MAX.).
14. ALL GATES SHALL BE FURNISHED COMPLETE WITH HEAVY DUTY HINGES CAPABLE OF SWING 90° IN AND OUT, CENTER GATE STOP AND DOUBLE GATE LATCH WITH PROVISIONS FOR A PADLOCK AND A DROP ROD OR PLUNGER BAR ARRANGED TO ENGAGE THE GATE STOP. LOCKING DEVICES SHALL BE CONSTRUCTED SO THAT THE CENTER DROP ROD OR PLUNGER BAR CANNOT BE RAISED WHEN THE GATE IS LOCKED.
15. CONTRACTOR SHALL NOT BEGIN INSTALLATION AND ERECTION BEFORE FINAL GRADING IS COMPLETED, UNLESS OTHERWISE APPROVED BY THE CONTRACTING OFFICER.
16. CONTRACTOR SHALL SUBMIT FOR APPROVAL THE PROPOSED SECURITY FENCE LAYOUT SHOWING ALL GATE HARDWARE.

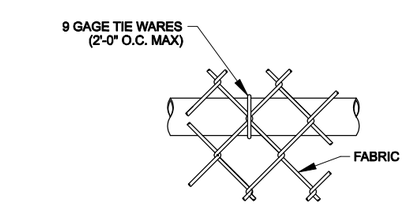

TOP OR BRACE RAIL ATTACHMENT

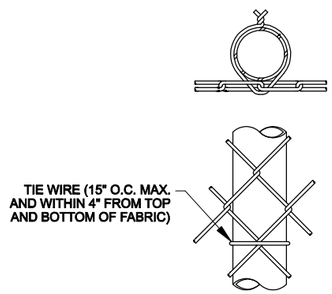

ROUND POST
LINE POST ATTACHMENTS

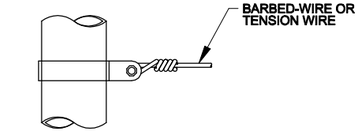

TENSION BAND DETAIL

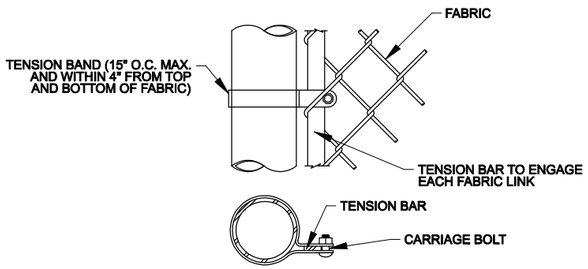

END OR GATE POST DETAIL

FASTENING DETAILS

US Army Corps of Engineers®
NEW ORLEANS DISTRICT

MARK	DESCRIPTION	DATE	APPR.

MARK	DESCRIPTION	DATE	APPR.

U.S. ARMY CORPS OF ENGINEERS
NEW ORLEANS DISTRICT
NEW ORLEANS, LOUISIANA

DESIGNED BY: USACE - NEW ORLEANS
DRWN BY:
CHK'D BY:
SUBMITTED BY:
DATE: MAY 2008
SOLICITATION NO.:
CONTRACT NO.:
PLOT SCALE:
PLOT DATE:
FILE NUMBER: A&E-TYPICALS
LEVEL:
SIZE: ANSI D
FILE NAME: A&E-TYPXS.DGN

USACE - NEW ORLEANS
HURRICANE DESIGN GUIDELINES
A/E TYPICAL DRAWINGS
-
GENERAL DRAWINGS
FENCING DETAILS
-

SHEET IDENTIFICATION
X-00

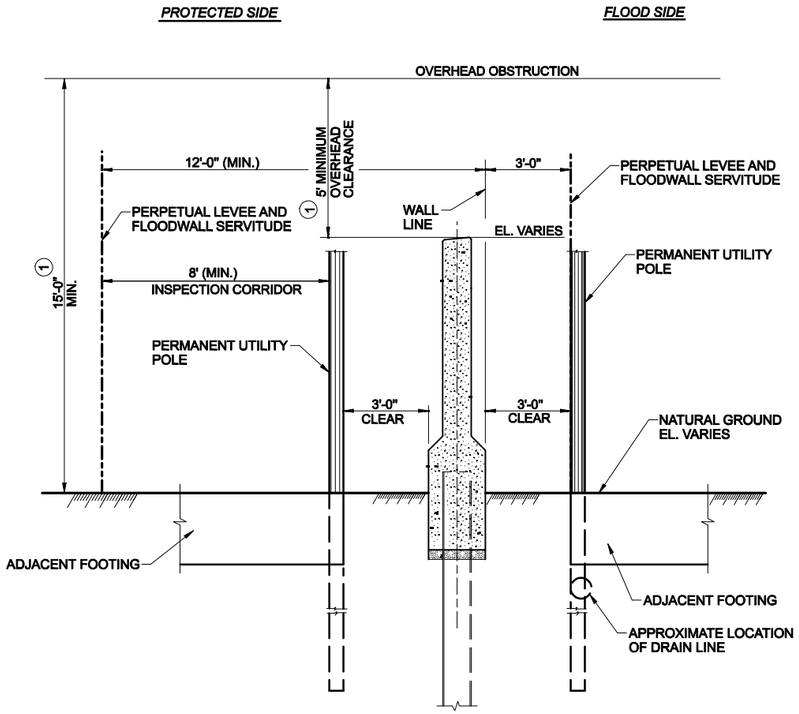

I-WALL CLEARANCES WITH INSPECTION CORRIDOR

SCALE: 3/8" = 1'- 0"

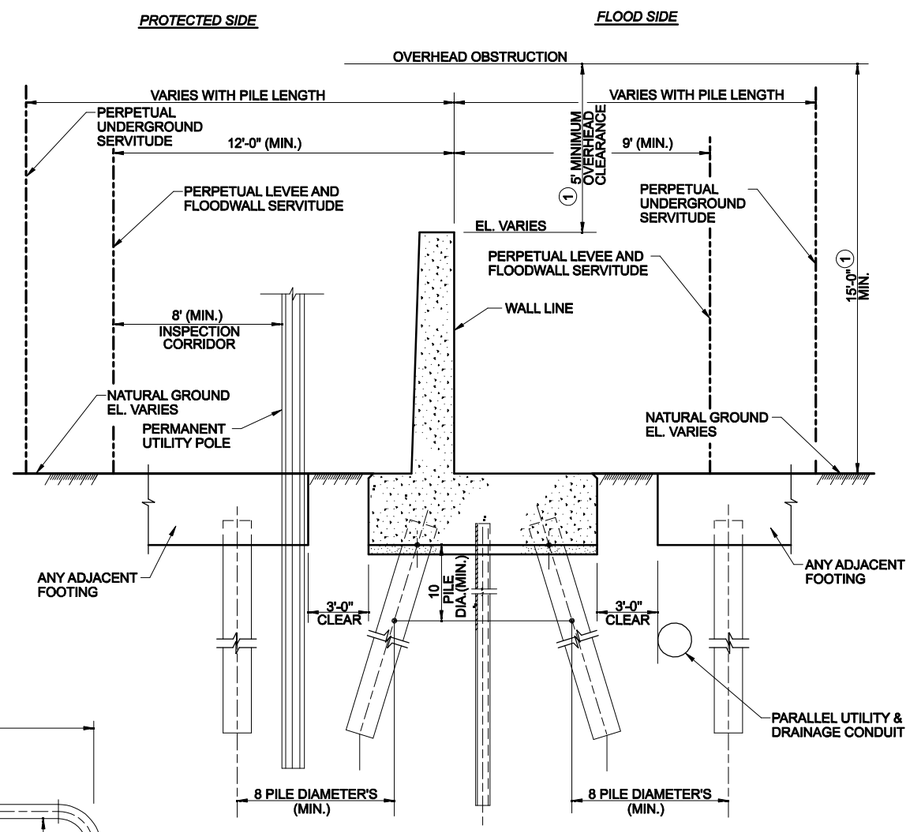

T-WALL CLEARANCES WITH INSPECTION CORRIDOR

NTS

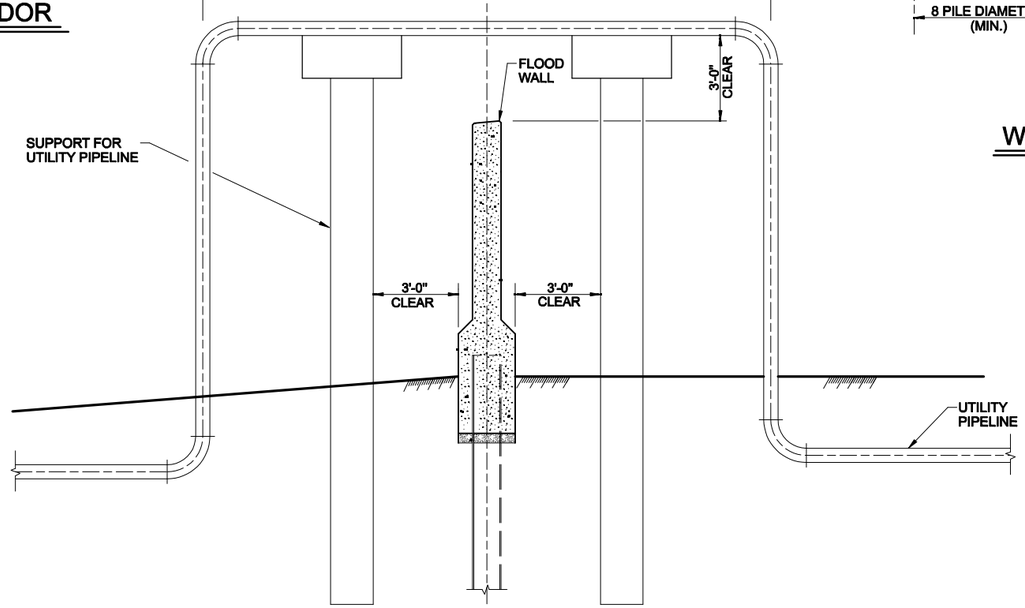

I-WALL CLEARANCES WITHOUT INSPECTION CORRIDOR

SCALE: 3/8" = 1'- 0"

1. USE THE GREATER OF THE 5' CLEARANCE FROM THE TOP OF THE WALL OR THE 15' FROM THE NATURAL GROUND SURFACE. FOR ELECTRIC LINES CLEARANCE SHALL ALSO COMPLY WITH EM 385-1-1.
2. ALL POLES AND SUBSURFACE FOOTINGS PLACED WITHIN THE PERPETUAL UNDERGROUND SERVITUDE SHALL BE COORDINATED WITH A COE REPRESENTATIVE DURING DESIGN AND CONSTRUCTION SO AS TO AVOID INTERFERING WITH THE EXISTING T-WALL PILES.
3. ALL OBSTRUCTIONS OTHER THAN POLES BUILT ABOVE GROUND AND WITHIN THE EXISTING PERPETUAL LEVEE AND FLOODWALL STRUCTURES SHALL BE MADE REMOVABLE. THE CONSTRUCTION OF SUCH OBSTRUCTIONS REQUIRES A PERMIT APPROVAL ISSUED BY THE LOCAL LEVEE DISTRICT. IT SHALL BE THE RESPONSIBILITY OF THE OWNER TO REMOVE THE OBSTRUCTION AT THE REQUEST OF THE LOCAL LEVEE DISTRICT.
4. UTILITIES, BUILDINGS, ETC. ARE PROHIBITED FROM BEING ATTACHED TO ANY PART OF A FLOODWALL.
5. UTILITIES ARE PROHIBITED FROM PASSING THROUGH I-WALLS. PENETRATIONS THROUGH T-WALLS ARE ACCEPTABLE PROVIDED A USACE APPROVED SEALED SLEEVE IS USED. TYPICAL SLEEVE DETAILS ARE SHOWN ON ANOTHER DWG. ALL PENETRATIONS SHALL BE APPROVED IN ACCORDANCE WITH THE LOCAL LEVEE DISTRICT PERMIT PROCESS.

SCALE: 3/8"=1'
0 1' 3' 6'

US Army Corps of Engineers
NEW ORLEANS DISTRICT

MARK	DESCRIPTION	DATE	APPR.
MARK	DESCRIPTION	DATE	APPR.

DESIGNED BY: USACE - NEW ORLEANS
DWN BY:
CKD BY:
SUBMITTED BY:
DATE: MAY 2008
SOLICITATION NO.:
CONTRACT NO.:
PLOT SCALE: 1
PLOT DATE:
SIZE: ANSI D
FILE NUMBER: A/E TYPICALS
FILE NAME: AE-TYP08.DGN

U.S. ARMY CORPS OF ENGINEERS
NEW ORLEANS DISTRICT
NEW ORLEANS, LOUISIANA

USACE - NEW ORLEANS
HURRICANE DESIGN GUIDELINES
A/E TYPICAL DRAWINGS
~
GENERAL DRAWINGS
PERPETUAL FLOODWALL SERVITUDE
~

SHEET IDENTIFICATION
X-00

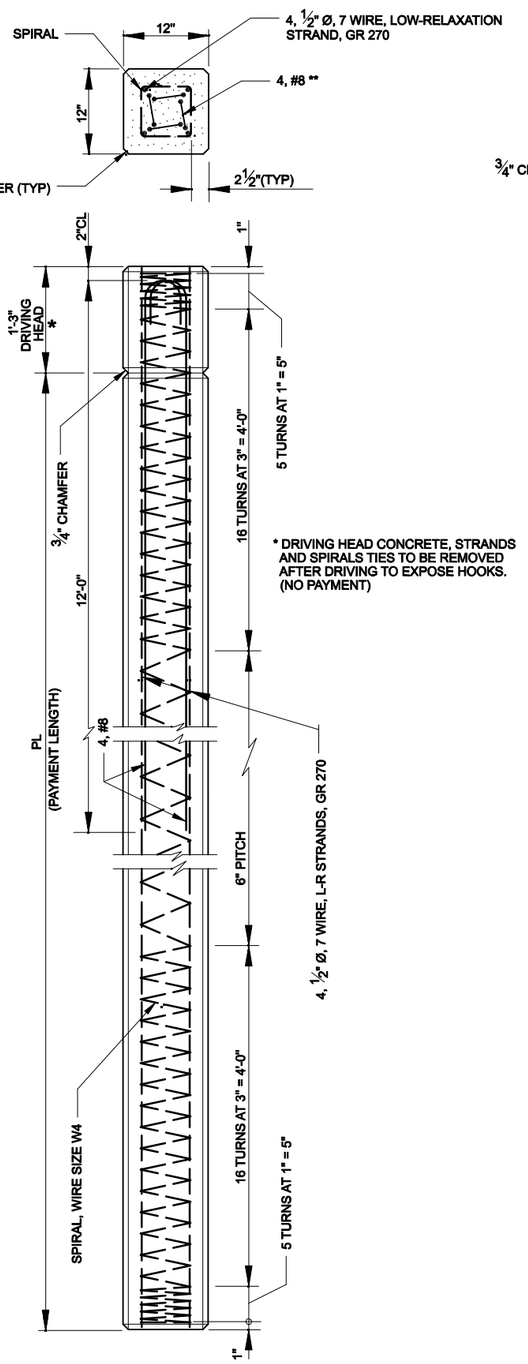

* DRIVING HEAD CONCRETE, STRANDS AND SPIRALS TIES TO BE REMOVED AFTER DRIVING TO EXPOSE HOOKS. (NO PAYMENT)

NOTE:
GRIND PRESTRESSED STRANDS FLUSH WITH PILE HEAD AND PILE TIP.

12" X 12" PRESTRESSED PRECAST CONCRETE PILE

NTS

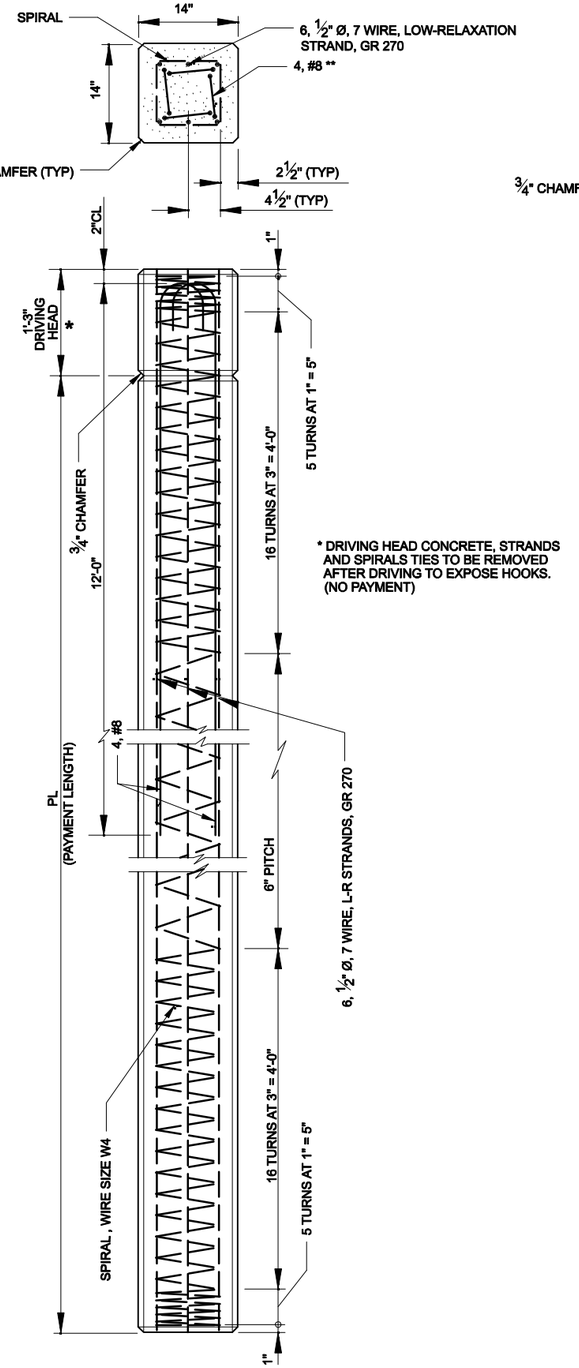

* DRIVING HEAD CONCRETE, STRANDS AND SPIRALS TIES TO BE REMOVED AFTER DRIVING TO EXPOSE HOOKS. (NO PAYMENT)

NOTE:
GRIND PRESTRESSED STRANDS FLUSH WITH PILE HEAD AND PILE TIP.

14" X 14" PRESTRESSED PRECAST CONCRETE PILE

NTS

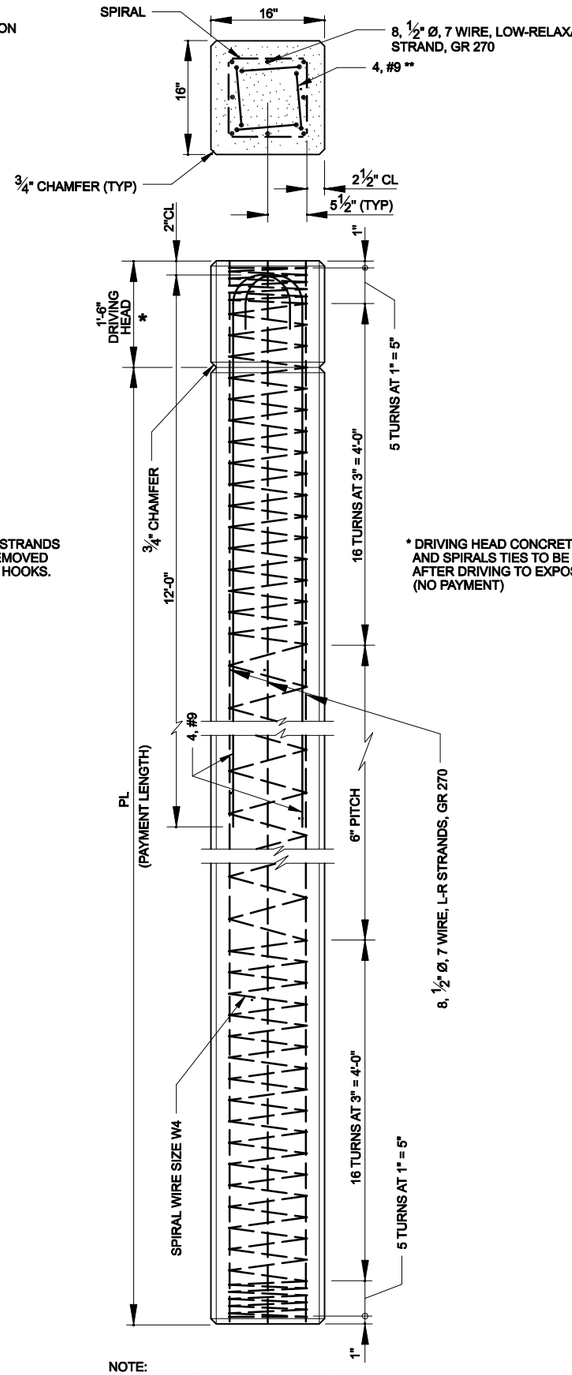

* DRIVING HEAD CONCRETE, STRANDS AND SPIRALS TIES TO BE REMOVED AFTER DRIVING TO EXPOSE HOOKS. (NO PAYMENT)

NOTE:
GRIND PRESTRESSED STRANDS FLUSH WITH PILE HEAD AND PILE TIP.

16" X 16" PRESTRESSED PRECAST CONCRETE PILE

NTS

** STANDARD 180° HOOK ON REINFORCING FOR ALL PILES. TO ALLOW FOR PROPER PLACEMENT OF CONCRETE, HOOKS SHOULD BE PLACED SO THAT BEND OF HOOK IS APPROXIMATELY PARALLEL TO ADJACENT FACE OF PILE AS SHOWN.

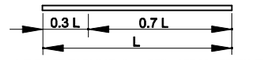

1 POINT PICKUP (L ≤ 53') 12" X 12" PILE
1 POINT PICKUP (L ≤ 59') 14" X 14" PILE
1 POINT PICKUP (L ≤ 61') 16" X 16" PILE

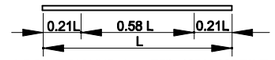

2 POINT PICKUP (L ≤ 75') 12" X 12" PILE
2 POINT PICKUP (L ≤ 84') 14" X 14" PILE
2 POINT PICKUP (L ≤ 87') 16" X 16" PILE

NOTES:
1. PICKUP POINTS TO BE PLAINLY MARKED ON PILES
2. PICKUP POINTS SHOWN FOR 5,000 PSI CONCRETE ONLY

PILE SCHEDULE					PAYMENT LENGTH	
W/L STATIONS	PILE SIZE	NUMBER OF PILES	PILE BATTER	PILE TIP ELEV.	FLOOD SIDE	PROTECT SIDE

EXACT LENGTHS OF PRESTRESSED CONCRETE PILING SHALL BE DETERMINED AFTER PILE TEST ARE CONDUCTED. LENGTHS SHOWN ARE FOR ESTIMATING PURPOSES ONLY.

NOTES
1. ONLY 5,000 OR 6,000 PSI CONCRETE SHALL BE USED FOR PRESTRESSED CONCRETE PILES.

US Army Corps of Engineers®
NEW ORLEANS DISTRICT

MARK	DESCRIPTION	DATE	APPR.

MARK	DESCRIPTION	DATE	APPR.

U.S. ARMY CORPS OF ENGINEERS
NEW ORLEANS DISTRICT
NEW ORLEANS, LOUISIANA

DESIGNED BY: USACE - NEW ORLEANS
DWN BY:
SUBMITTED BY:
PLOT SCALE: PLOT DATE:
SIZE: ANSI D
FILE NAME: AE-TYPHOON
DATE: MAY 2008
SOLICITATION NO.:
CONTRACT NO.:
FILE NUMBER: A/E TYPICALS

USACE - NEW ORLEANS
HURRICANE DESIGN GUIDELINES
A/E TYPICAL DRAWINGS
-
PILING DETAILS
LOW-LAXATION STRANDS
-

SHEET IDENTIFICATION
X-00

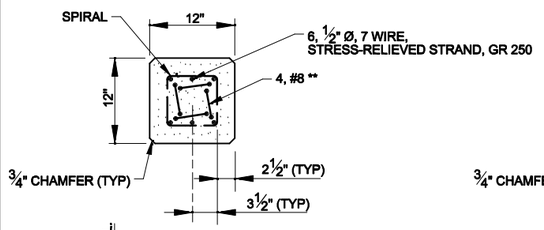

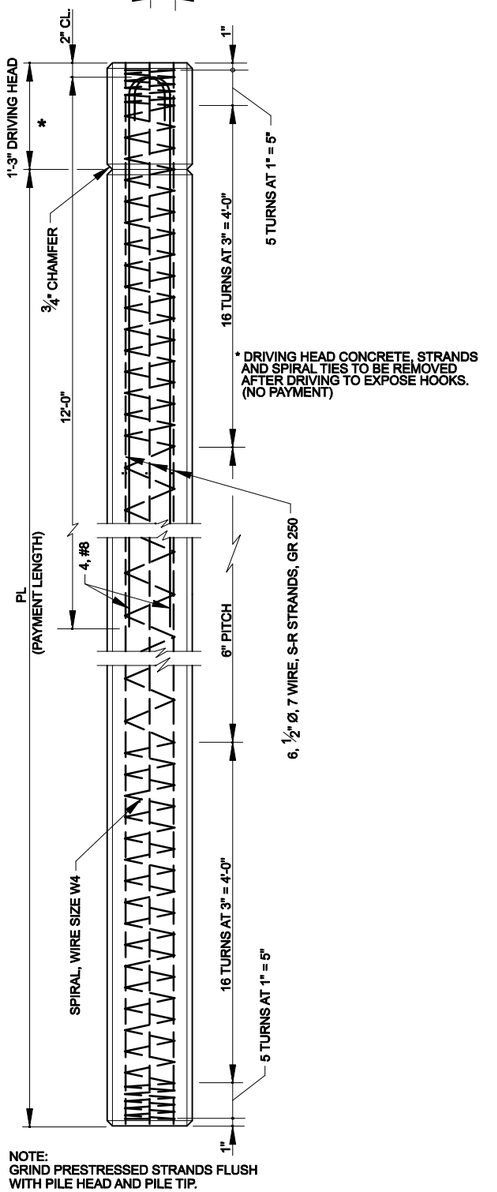

* DRIVING HEAD CONCRETE, STRANDS AND SPIRAL TIES TO BE REMOVED AFTER DRIVING TO EXPOSE HOOKS. (NO PAYMENT)

NOTE:
GRIND PRESTRESSED STRANDS FLUSH WITH PILE HEAD AND PILE TIP.

12" X 12" PRESTRESSED PRE-CAST CONCRETE PILE

NTS

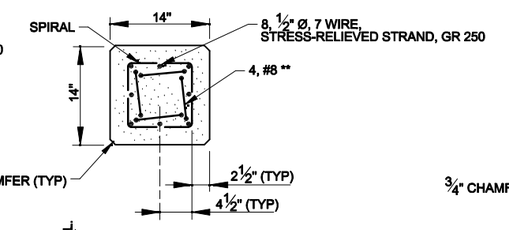

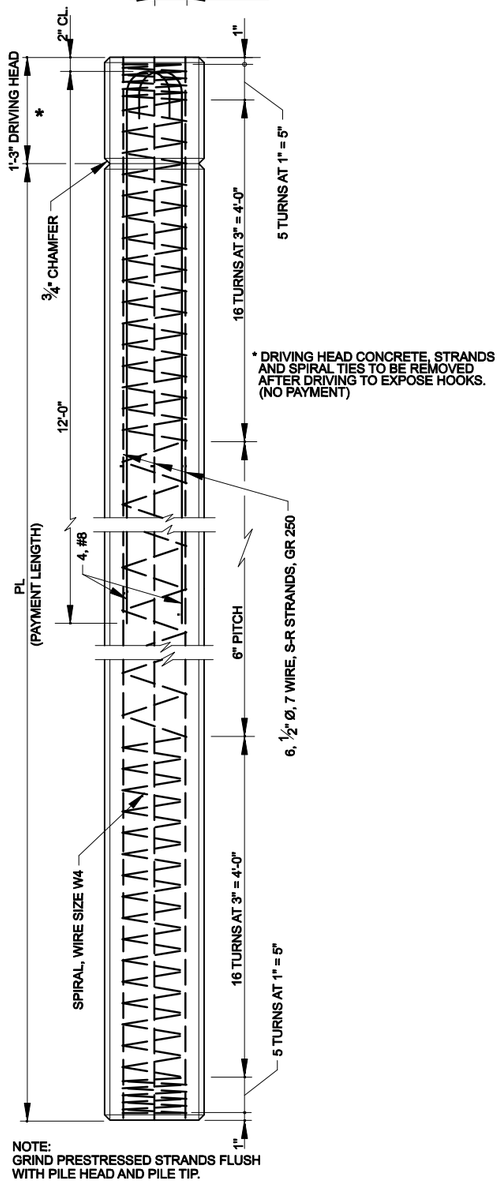

* DRIVING HEAD CONCRETE, STRANDS AND SPIRAL TIES TO BE REMOVED AFTER DRIVING TO EXPOSE HOOKS. (NO PAYMENT)

NOTE:
GRIND PRESTRESSED STRANDS FLUSH WITH PILE HEAD AND PILE TIP.

14" X 14" PRESTRESSED PRE-CAST CONCRETE PILE

NTS

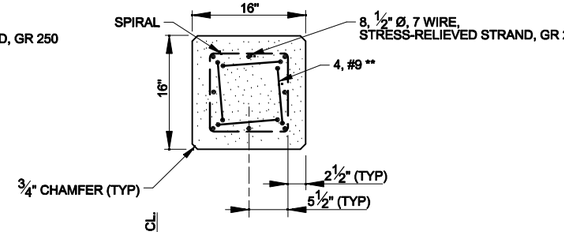

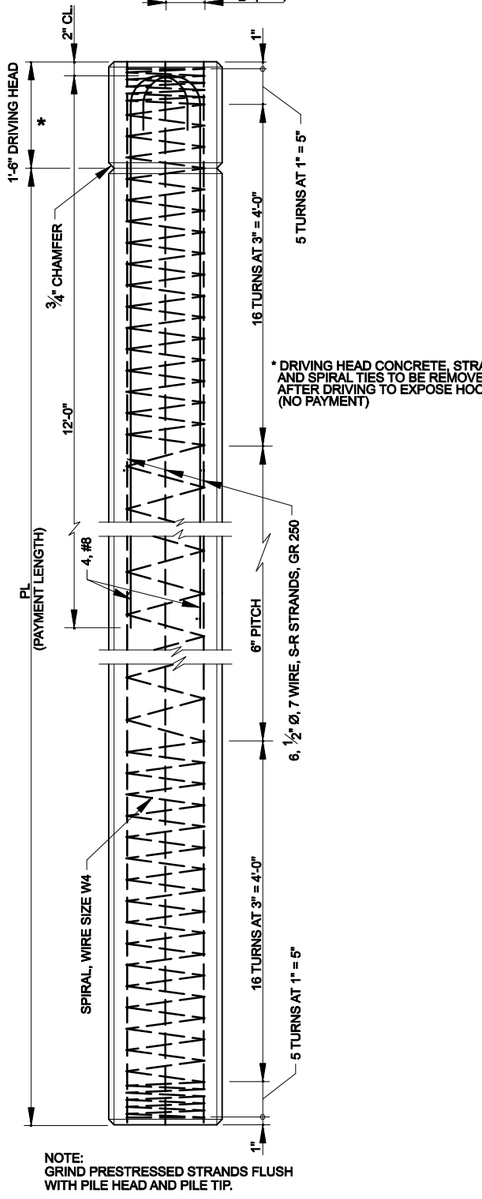

* DRIVING HEAD CONCRETE, STRANDS AND SPIRAL TIES TO BE REMOVED AFTER DRIVING TO EXPOSE HOOKS. (NO PAYMENT)

NOTE:
GRIND PRESTRESSED STRANDS FLUSH WITH PILE HEAD AND PILE TIP.

16" X 16" PRESTRESSED PRE CAST CONCRETE PILE

NTS

** STANDARD 180° HOOK ON REINFORCING FOR ALL PILES. TO ALLOW FOR PROPER PLACEMENT OF CONCRETE, HOOKS SHOULD BE PLACED SO THAT BEND OF HOOK IS APPROXIMATELY PARALLEL TO ADJACENT FACE OF PILE AS SHOWN.

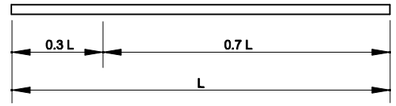

1 POINT PICKUP (L ≤ 54') 12" X 12" PILE

1 POINT PICKUP (L ≤ 58') 14" X 14" PILE

1 POINT PICKUP (L ≤ 60') 16" X 16" PILE

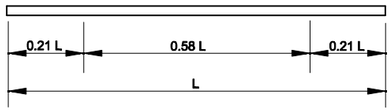

2 POINT PICKUP (L ≤ 77') 12" X 12" PILE

2 POINT PICKUP (L ≤ 83') 14" X 14" PILE

2 POINT PICKUP (L ≤ 86') 16" X 16" PILE

NOTES:

1. PICKUP POINTS TO BE PLAINLY MARKED ON PILES
2. PICKUP POINTS SHOWN FOR 5,000 PSI CONCRETE ONLY

PILE SCHEDULE						
W/L STATIONS	PILE SIZE	NUMBER OF PILES	PILE BATTER	PILE TIP ELEVATION	PAYMENT LENGTH	
					FLOOD SIDE	PROTECTED SIDE

NOTE:

EXACT LENGTHS OF PRESTRESSED CONCRETE SHALL BE DETERMINED AFTER PILE TEST ARE CONDUCTED. LENGTHS SHOWN ARE FOR ESTIMATING PURPOSES ONLY.

NOTES

1. ONLY 5,000 OR 6,000 PSI CONCRETE SHALL BE USED FOR PRESTRESSED CONCRETE PILES.

US Army Corps of Engineers®
NEW ORLEANS DISTRICT

MARK	DESCRIPTION	DATE	APPR.
MARK	DESCRIPTION	DATE	APPR.

U.S. ARMY CORPS OF ENGINEERS
NEW ORLEANS DISTRICT
NEW ORLEANS, LOUISIANA

DESIGNED BY: USACE - NEW ORLEANS
DWN BY:
CKD BY:
SUBMITTED BY:
DATE: MAY 2006
SOLICITATION NO.:
CONTRACT NO.:
PLOT SCALE:
PLOT DATE:
FILE NUMBER: A/E TYPICALS
SIZE: ANSI D
FILE NAME: AE-TYP11.DGN

USACE - NEW ORLEANS
HURRICANE DESIGN GUIDELINES
A/E TYPICAL DRAWINGS
~
PILING DETAILS
STRESS-RELIEVED STRANDS
~

SHEET IDENTIFICATION
X-00

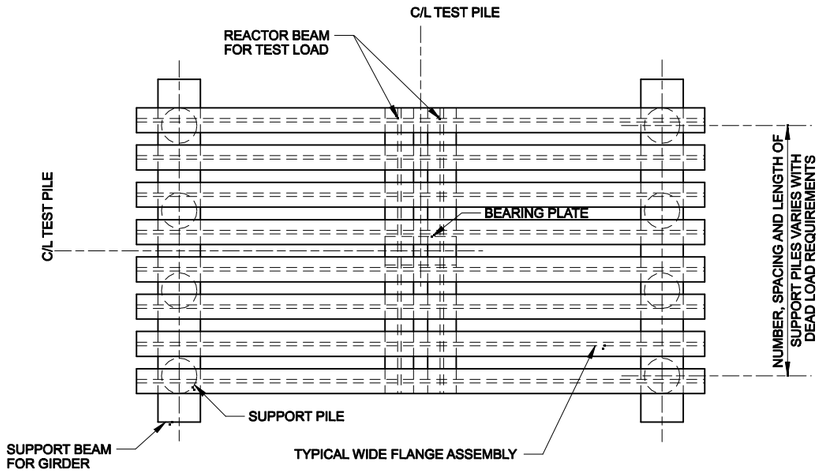

PLAN

MANDATORY LOADING FRAME NOTES:

1. LOADING FRAME SHOWN WITHOUT DEAD LOAD.
2. CONTRACTOR TO PROVIDE PILE LAYOUT FOR EACH PARTICULAR DEAD LOAD TEST.
3. SECURE DEAD WEIGHT LOAD TO LOADING FRAME WITH CHAINS AND BINDERS.
4. DESIGN OF THE LOADING FRAME IS THE RESPONSIBILITY OF THE CONTRACTOR AND MUST BE SUBMITTED TO THE CONTRACTING OFFICER FOR APPROVAL.

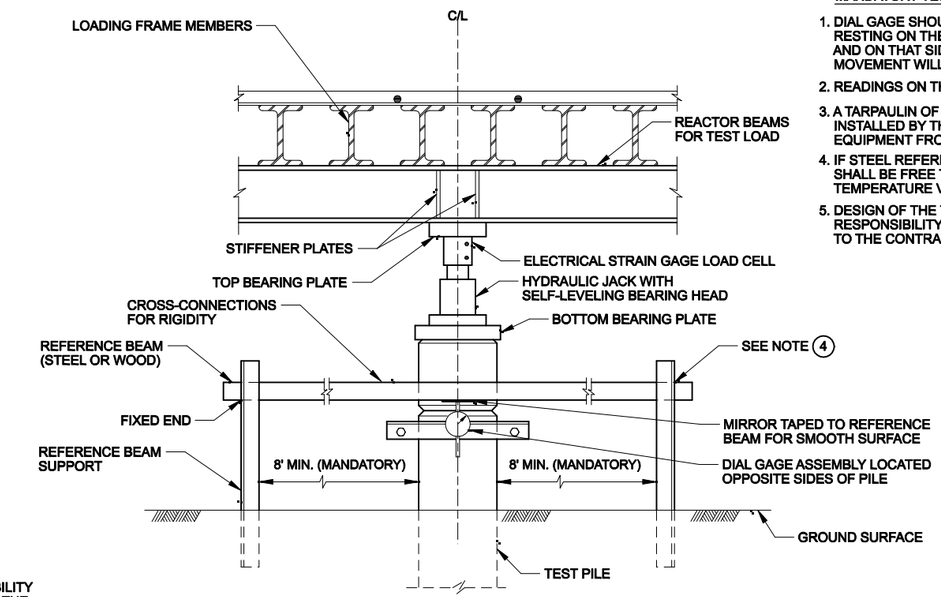

SECTION (B)

TEST APPARATUS

MANDATORY TEST APPARATUS NOTES:

1. DIAL GAGE SHOULD BE ATTACHED TO THE PILE WITH THE STEM RESTING ON THE REFERENCE BEAM IN THE COMPRESSED POSITION AND ON THAT SIDE OF THE REFERENCE BEAM WHERE THE MOVEMENT WILL BE AWAY FROM THE BEAM.
2. READINGS ON THE OPPOSITE SIDES OF THE PILE ARE NECESSARY.
3. A TARPAULIN OF MINIMUM DIMENSION 12' X 12' SHALL BE INSTALLED BY THE CONTRACTOR TO PROTECT THE MEASURING EQUIPMENT FROM THE DIRECT EFFECTS OF THE WEATHER.
4. IF STEEL REFERENCE BEAMS ARE USED, ONE END OF EACH BEAM SHALL BE FREE TO MOVE AS THE LENGTH OF THE BEAMS CHANGE WITH TEMPERATURE VARIATIONS.
5. DESIGN OF THE TEST APPARATUS PILE SET-UP IS THE RESPONSIBILITY OF THE CONTRACTOR AND MUST BE SUBMITTED TO THE CONTRACTING OFFICER FOR APPROVAL.

NOTE:

THE CONTRACTOR HAS THE OPTION OF USING REACTION PILES IN LIEU OF THE LOADING FRAME. (SEE SPECIFICATIONS)

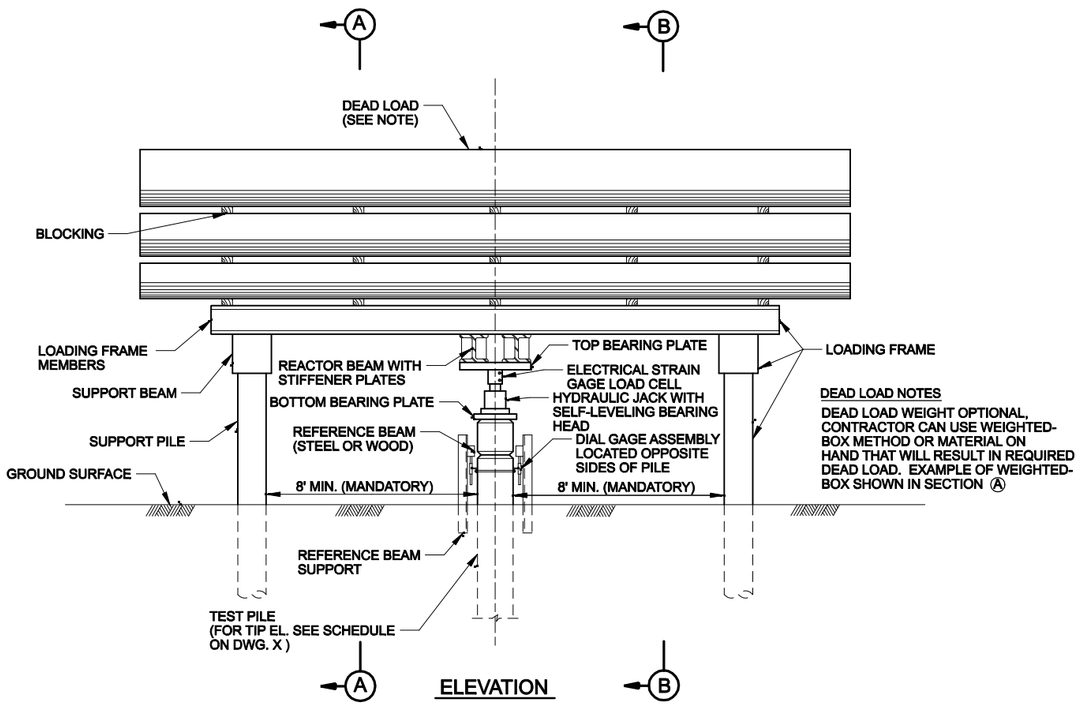

ELEVATION

LOADING FRAME

DEAD LOAD NOTES

DEAD LOAD WEIGHT OPTIONAL, CONTRACTOR CAN USE WEIGHTED-BOX METHOD OR MATERIAL ON HAND THAT WILL RESULT IN REQUIRED DEAD LOAD. EXAMPLE OF WEIGHTED-BOX SHOWN IN SECTION (A)

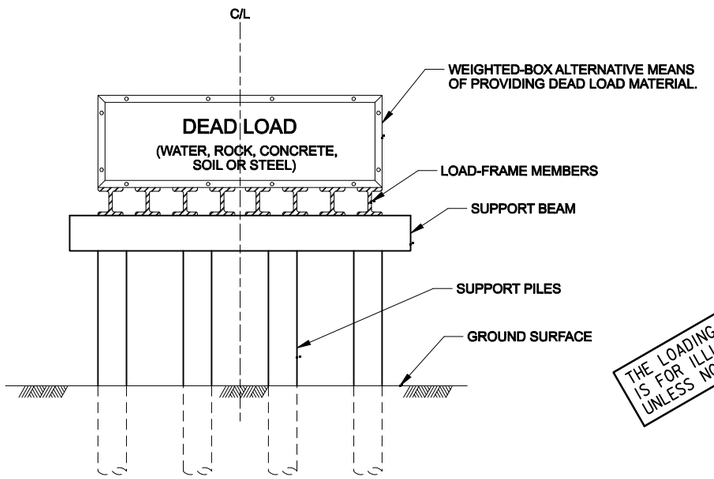

SECTION (A)

THE LOADING FRAME AND TEST APPARATUS IS FOR ILLUSTRATION PURPOSES ONLY, UNLESS NOTED MANDATORY.

US Army Corps of Engineers
NEW ORLEANS DISTRICT

MARK	DESCRIPTION	DATE	APPR.

MARK	DESCRIPTION	DATE	APPR.

DESIGNED BY: USACE - NEW ORLEANS
DWN BY:
CKD BY:
SUBMITTED BY:
DATE: MAY 2008
SOLICITATION NO.:
CONTRACT NO.:
PLOT SCALE: 1 = 1
PLOT DATE:
SIZE: ANSI D
FILE NUMBER: A/E TYPICALS
FILE NAME: AE-TYP12.DGN

U.S. ARMY CORPS OF ENGINEERS
NEW ORLEANS DISTRICT
NEW ORLEANS, LOUISIANA

USACE - NEW ORLEANS
HURRICANE DESIGN GUIDELINES
A/E TYPICAL DRAWINGS
~
PILING DETAILS
COMPRESSION PILE TEST
~

SHEET IDENTIFICATION
X-00

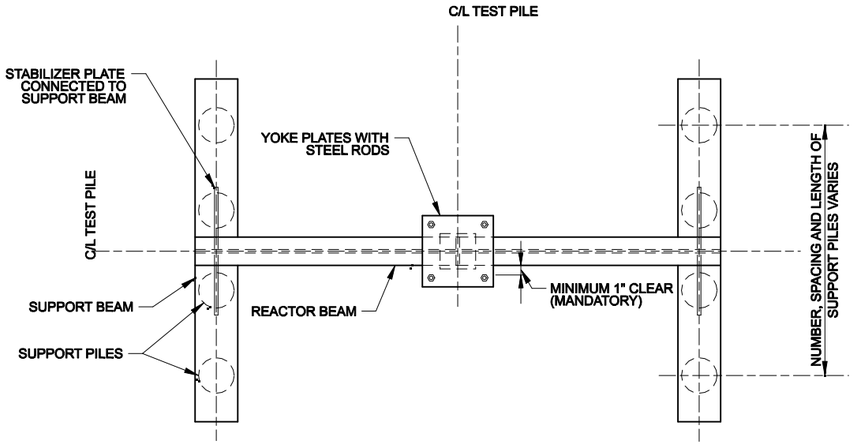

PLAN

MANDATORY LOADING FRAME NOTE:

1. DESIGN OF THE LOADING FRAME IS THE RESPONSIBILITY OF THE CONTRACTOR AND MUST BE SUBMITTED TO THE CONTRACTING OFFICER FOR APPROVAL.

MANDATORY TEST APPARATUS NOTES:

1. DIAL GAGE SHOULD BE ATTACHED TO THE PILE WITH THE STEM RESTING ON THE REFERENCE BEAM IN THE COMPRESSED POSITION AND ON THAT SIDE OF THE REFERENCE BEAM WHERE THE MOVEMENT WILL BE AWAY FROM THE BEAM.
2. READINGS ON THE OPPOSITE SIDES OF THE PILE ARE NECESSARY.
3. A TARPAULIN OF MINIMUM DIMENSION 12' X 12' SHALL BE INSTALLED BY THE CONTRACTOR TO PROTECT THE MEASURING EQUIPMENT FROM THE DIRECT EFFECTS OF THE WEATHER.
4. IF STEEL REFERENCE BEAMS ARE USED, ONE END OF EACH BEAM SHALL BE FREE TO MOVE AS THE LENGTH OF BEAMS CHANGE WITH TEMPERATURE VARIATIONS.
5. DESIGN OF THE TEST APPARATUS PILE SET-UP IS THE RESPONSIBILITY OF THE CONTRACTOR AND MUST BE SUBMITTED TO THE CONTRACTING OFFICER FOR APPROVAL.

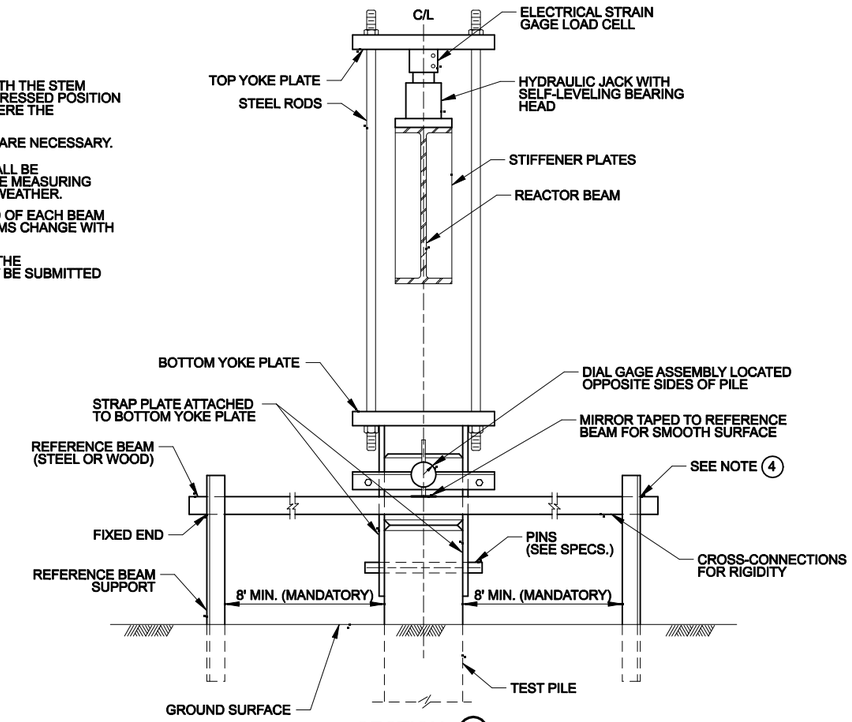

SECTION B

TEST APPARATUS

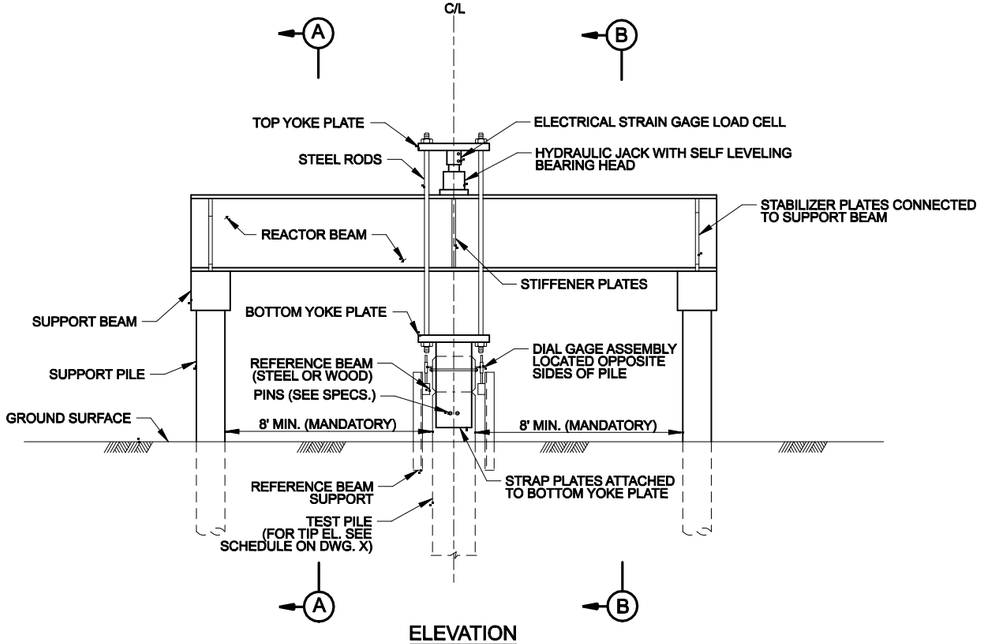

ELEVATION

LOADING FRAME

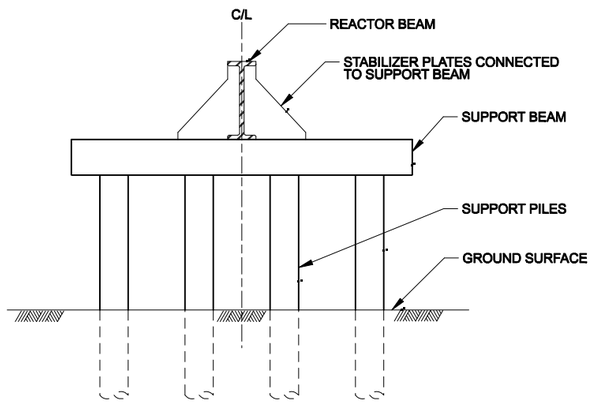

SECTION A

THE LOADING FRAME AND TEST APPARATUS IS FOR ILLUSTRATION PURPOSES ONLY, UNLESS NOTED MANDATORY.

US Army Corps of Engineers®
NEW ORLEANS DISTRICT

MARK	DESCRIPTION	DATE	APPR.

MARK	DESCRIPTION	DATE	APPR.

U.S. ARMY CORPS OF ENGINEERS
NEW ORLEANS DISTRICT
NEW ORLEANS, LOUISIANA

DESIGNED BY: USACE - NEW ORLEANS
DWN BY:
CKD BY:
SUBMITTED BY:
PLOT SCALE: 3/4" = 1'
PLOT DATE:
SIZE: ANSI D
FILE NAME: AE-TYP13.DGN
DATE: MAY 2008
SOLICITATION NO.:
CONTRACT NO.:
FILE NUMBER: A/E TYPICALS

USACE - NEW ORLEANS
HURRICANE DESIGN GUIDELINES
A/E TYPICAL DRAWINGS
~
PILING DETAILS
TENSION PILE TEST
~

SHEET IDENTIFICATION
X-00

NOTE:

DESIGNER MAY REMOVE THE HORIZONTAL WATERSTOP IF THE VERTICAL WATERSTOP IS CURVED WITH A 6" MINIMUM RADIUS TO CONNECT TO THE SHEET PILE AS SHOWN ON THIS DRAWING.

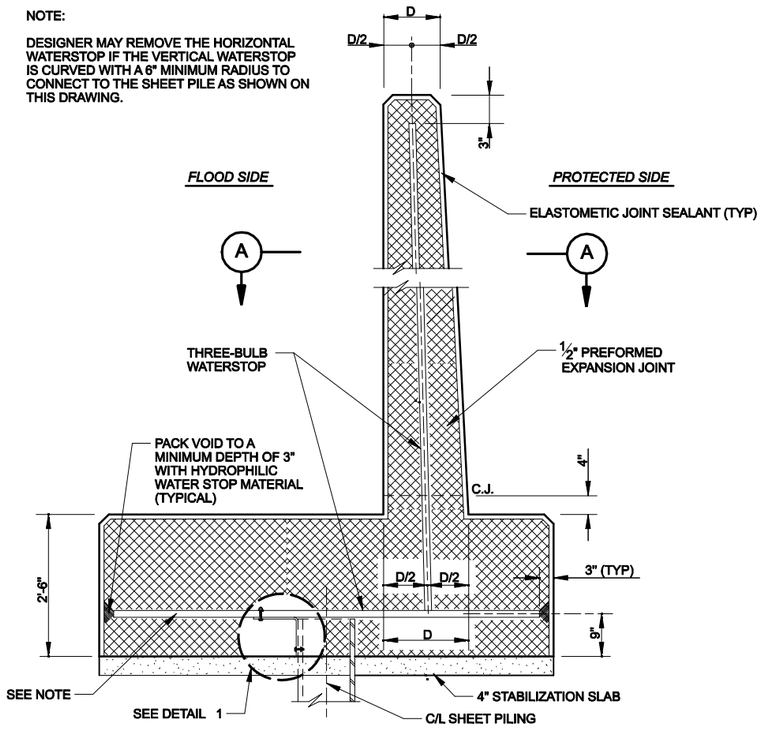

TYPICAL T-WALL JOINT

SCALE: ¾" = 1'- 0"

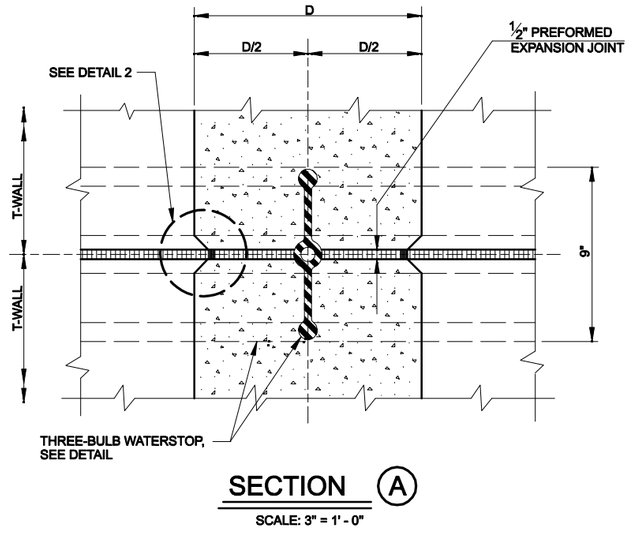

SECTION (A)

SCALE: 3" = 1' - 0"

SCALE: 3/4"=1' 0 1' 2' 3'

SCALE: 1"=1" 0 1" 2"

SCALE: 3"=1' 0 3" 6" 9" 12"

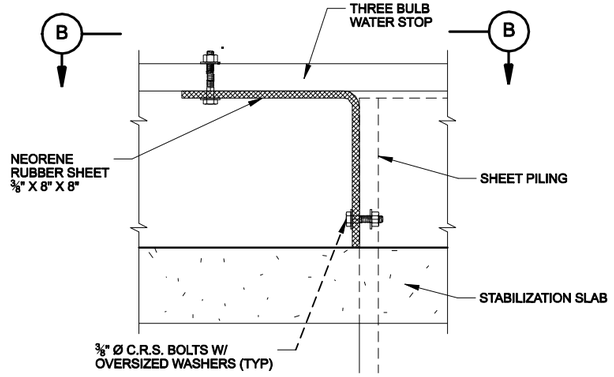

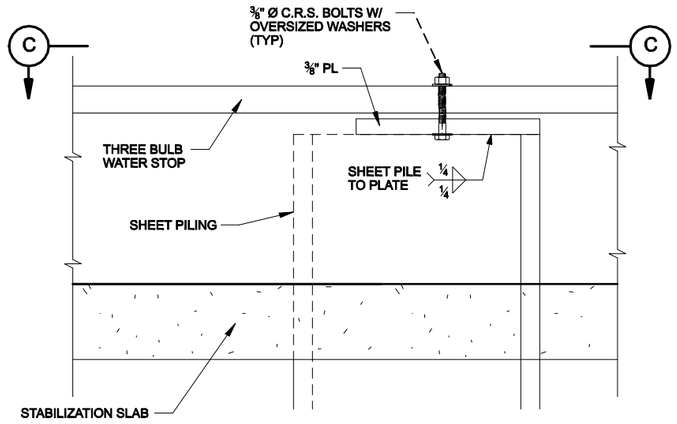

SHEETPILE INTERLOCK ALIGNED WITH THE WALL JOINT

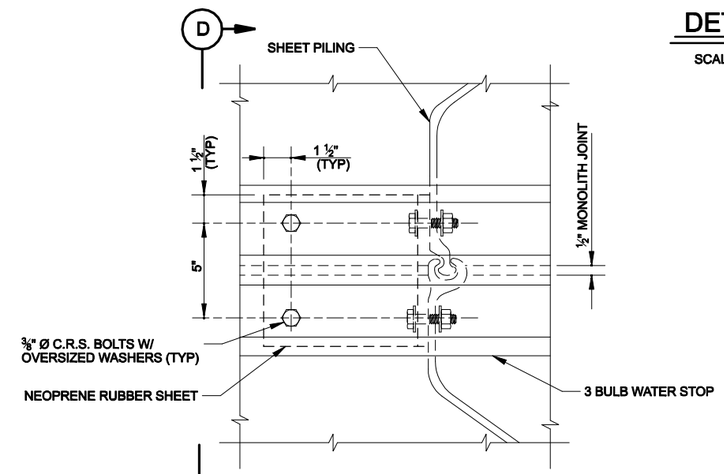

SECTION (B)

SCALE: 3" = 1' - 0"

DETAIL (1)

SCALE: 3" = 1' - 0"

SHEETPILE INTERLOCK UNALIGNED WITH THE WALL JOINT

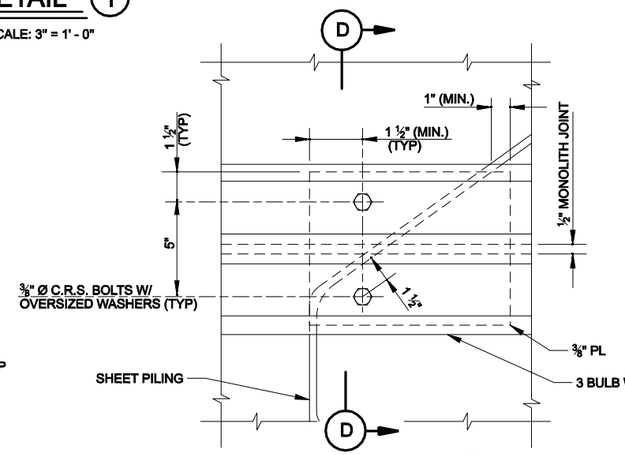

SECTION (C)

SCALE: 3" = 1' - 0"

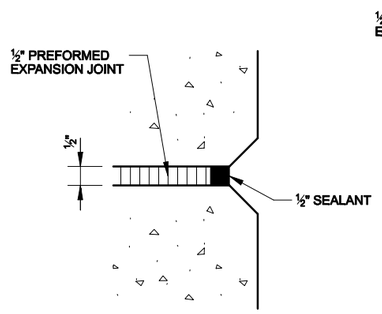

DRY CONDITION

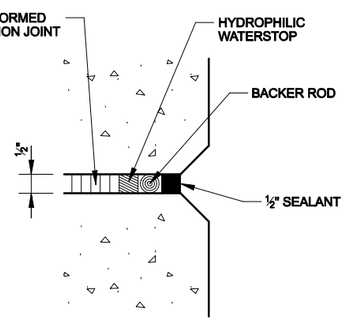

WET CONDITION

DETAIL (2)

SCALE: 3" = 1' - 0"

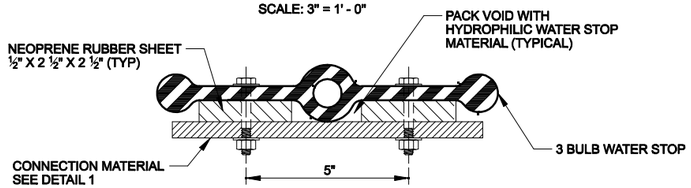

SECTION (D)

N.T.S.

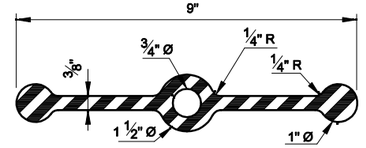

THREE-BULB WATERSTOP

SCALE: 1" = 1' - 0"

US Army Corps of Engineers®
NEW ORLEANS DISTRICT

MARK	DESCRIPTION	DATE	APPR.
MARK	DESCRIPTION	DATE	APPR.

DESIGNED BY: USACE - NEW ORLEANS
DWN BY: | CKD BY:
SUBMITTED BY:
PLOT SCALE: 1" = 1" | PLOT DATE:
SIZE: ANSI D
DATE: MAY 2008
SOLICITATION NO.:
CONTRACT NO.:
FILE NUMBER: AE170C43
FILE NAME: AE-TYP2DGN

U.S. ARMY CORPS OF ENGINEERS
NEW ORLEANS DISTRICT
NEW ORLEANS, LOUISIANA

USACE - NEW ORLEANS
HURRICANE DESIGN GUIDELINES
A/E TYPICAL DRAWINGS

WALL JOINTS
WALL JOINTS & POSITIVE CUT-OFF

SHEET IDENTIFICATION
X-00

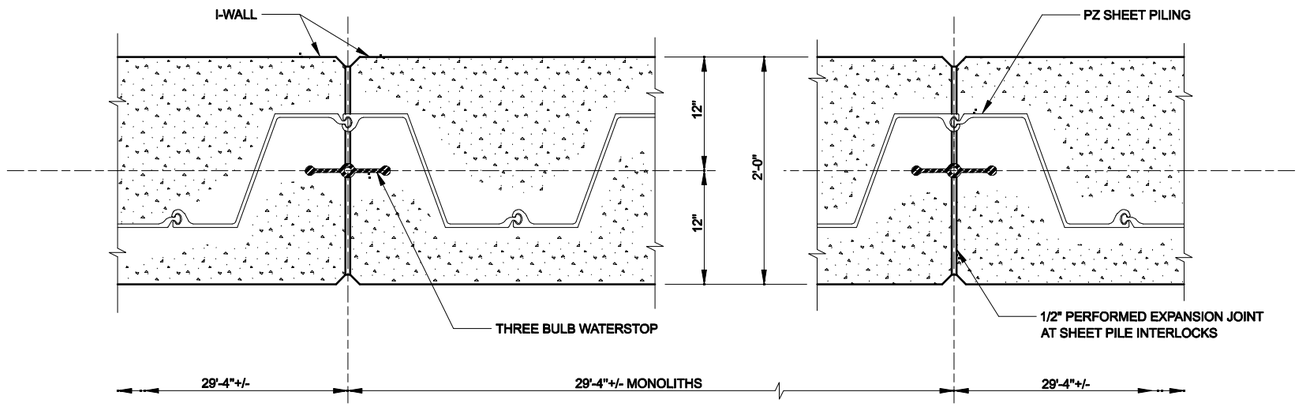

TYPICAL I-WALL MONOLITH SHEET PILE INTERLOCKS

SCALE: 1 ½" = 1' - 0"

NOTE:
I-WALL MONOLITHS SHALL BE 29'-4"+/- UNLESS OTHERWISE INDICATED ON THE PROFILE. EACH MONOLITH SHALL END AT THE CENTER OF THE NEAREST SHEET PILE INTERLOCK.

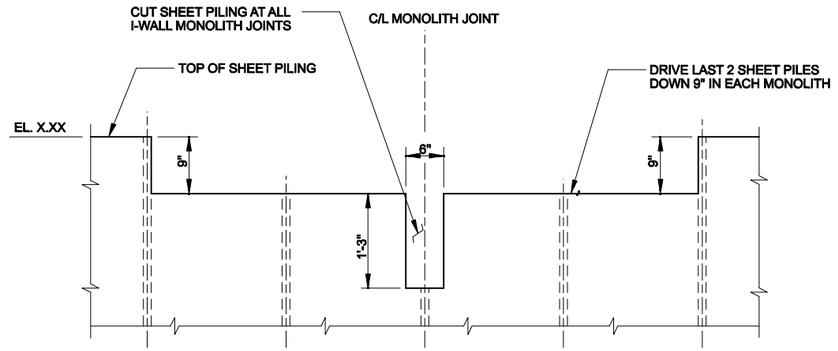

SHEET PILING DETAILS
I-WALL MONOLITH JOINTS

SCALE: 1" = 1'- 0"

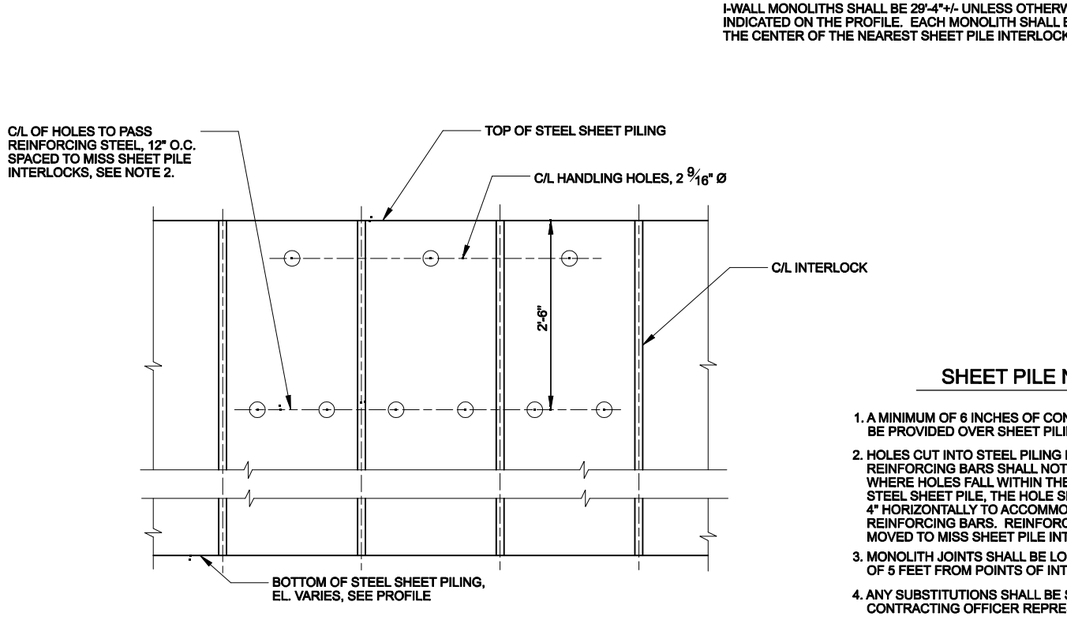

ELEVATION

DETAILS OF HOLES IN SHEET PILING

SHEET PILE NOTES

1. A MINIMUM OF 6 INCHES OF CONCRETE COVER SHALL BE PROVIDED OVER SHEET PILING AT ALL POINTS.
2. HOLES CUT INTO STEEL PILING FOR PASSING REINFORCING BARS SHALL NOT EXCEED 2" Ø WHERE HOLES FALL WITHIN THE WEB OF THE STEEL SHEET PILE, THE HOLE SHALL BE SLOTTED 4" HORIZONTALLY TO ACCOMMODATE PASSING THE REINFORCING BARS. REINFORCING BARS SHALL BE MOVED TO MISS SHEET PILE INTERLOCKS.
3. MONOLITH JOINTS SHALL BE LOCATED A MINIMUM OF 5 FEET FROM POINTS OF INTERSECTION.
4. ANY SUBSTITUTIONS SHALL BE SUBMITTED TO THE CONTRACTING OFFICER REPRESENTATIVE FOR APPROVAL.
5. STEEL SHEET PILE SURFACE PREPARATION AND PAINTING SHALL BE IN ACCORDANCE WITH SECTION 09940 OF THE SPECIFICATIONS.
6. STATIONS FOR SPECIAL Z-PILE TEES ARE APPROXIMATE.

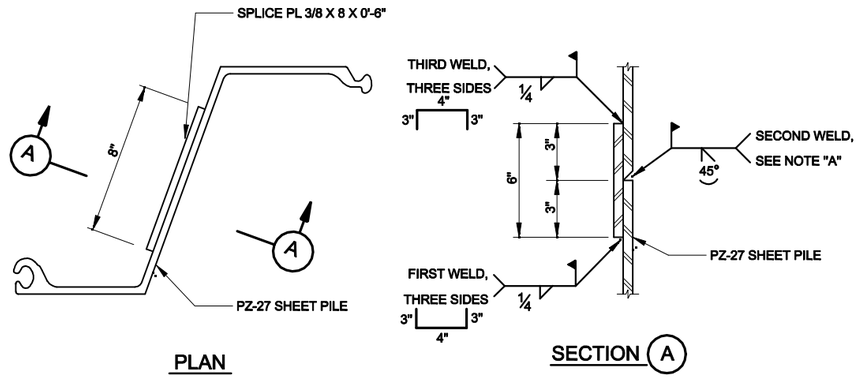

PLAN

SECTION (A)

SHEET PILE SPLICE DETAIL

SCALE: 3" = 1' - 0"

NOTE "A":
GROOVE WELD SHALL EXTEND THE FULL LENGTH OF THE SHEET PILE WEB AND FLANGES EXCLUDING THE INTERLOCKS.

SCALE: 1"=1'
0 1' 2'

SCALE: 3"=1'
0 3" 6" 9" 12"

SCALE:1-1/2"=1'
0 6" 1' 2'

US Army Corps of Engineers®
NEW ORLEANS DISTRICT

MARK	DESCRIPTION	DATE	APPR.
MARK	DESCRIPTION	DATE	APPR.

DESIGNED BY: USACE - NEW ORLEANS
DWN BY:
SUBMITTED BY:
DATE: MAY 2006
SOLICITATION NO.:
CONTRACT NO.:
PLOT SCALE: PLOT DATE:
FILE NAME: AE-TYP21.DGN
FILE NUMBER: A/E TYPICALS
SIZE: ANSI D

U.S. ARMY CORPS OF ENGINEERS
NEW ORLEANS DISTRICT
NEW ORLEANS, LOUISIANA

USACE - NEW ORLEANS
HURRICANE DESIGN GUIDELINES
A/E TYPICAL DRAWINGS
-
WALL JOINTS
SHEET PILE DETAILS
(1 OF 2)

SHEET IDENTIFICATION
X-00

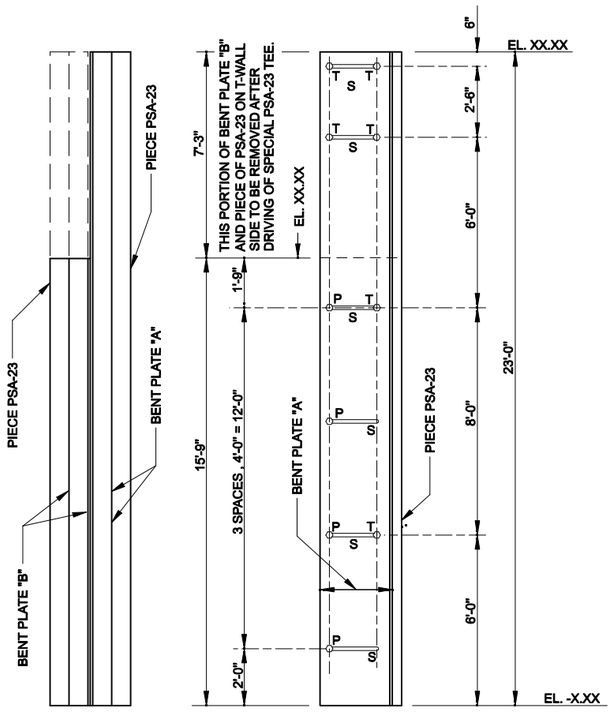

PROTECTED SIDE ELEVATION

I-WALL SIDE ELEVATION

STA. XXX+XX.XX W/L

ELEVATION OF SPECIAL PSA-23 TEE

SHOWING BENT PLATES BOLT SPACING

SCALE: HORIZ. 3/4" = 1'- 0"
VERT. 3/8" = 1'- 0"

LEGEND

P = PERMANENT BOLT
T = TEMPORARY BOLT
S = SLOTTED HOLE
(PLATE "A" ONLY)

PERMANENT BOLTS (TIGHTEN TO ALLOW FOR PLATE "A" SLIPPAGE)

C/L 7/8" Ø HIGH-STRENGTH BOLTS W/ FLAT WASHERS, SPACE FIRST BOLT 12" FROM TIP ELEVATION OF SPECIAL PSA-23 TEE, REST SPACED 4'-0" O.C. TO WITHIN 12" BELOW BOTTOM OF T-WALL BASE SLAB.

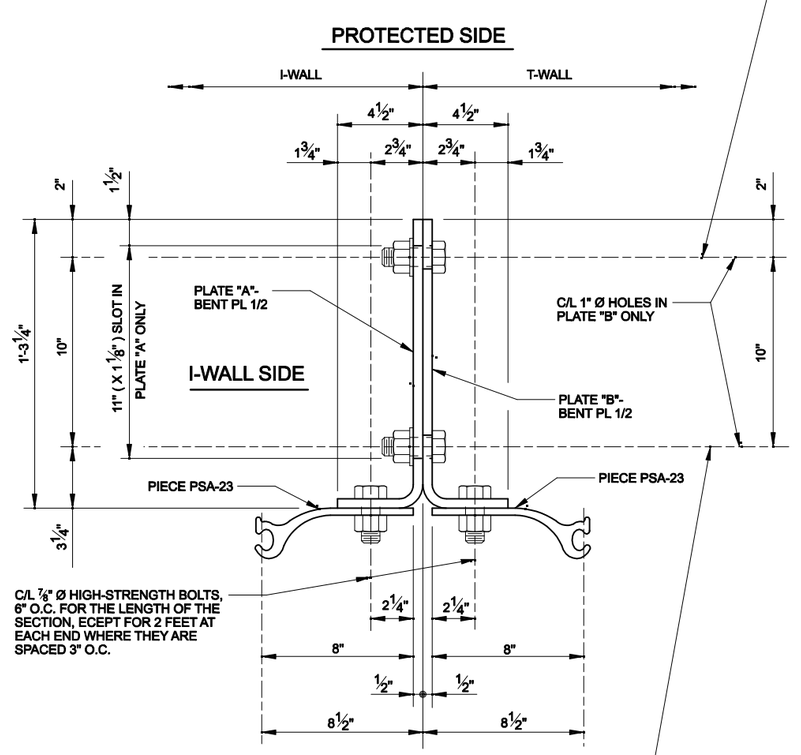

TEMPORARY DRIVING BOLTS

C/L 7/8" Ø HIGH-STRENGTH BOLTS W/ FLAT WASHERS, SPACE FIRST BOLT 5'-0" FROM TIP ELEVATION OF SPECIAL PSA-23 TEE, REST SPACED 8'-0" TO WITHIN 12" BELOW BOTTOM OF T-WALL BASE SLAB. THESE BOLTS ARE TO BE REMOVED WHEN EACH BOLT IS APPROXIMATELY 6" ABOVE GROUND LINE AS SPECIAL PSA-23 TEE IS DRIVEN, SO THAT UPON COMPLETION OF DRIVING NO TEMPORARY BOLTS REMAIN.

DETAIL (1)

SPECIAL PSA-23 TEE

SCALE: 3" = 1' - 0"

NOTE:

7/8" Ø HIGH-STRENGTH BOLTS SHALL BE HEAVY HEX BOLTS, ASTM A325M, TYPE 3 W/ HEAVY HEX NUTS, ASTM A563, GRADE C3, PLAIN, WEATHERING STEEL AND HARDENED STEEL WASHERS (WHERE REQUIRED), ASTM F436, PLAIN, TYPE 3 (WEATHERING STEEL).

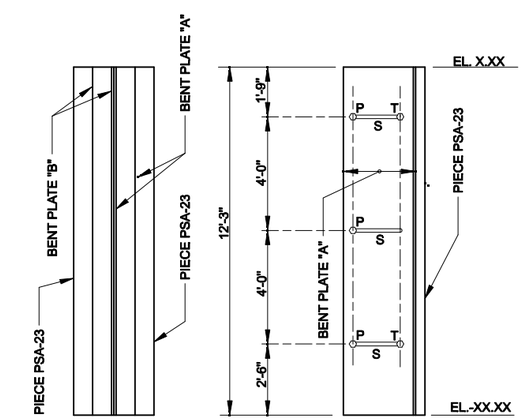

PROTECTED SIDE ELEVATION

I-WALL SIDE ELEVATION

STA. XXX+XX.XX W/L - SHOWN
STA. XXX+XX.XX W/L - OPPOSITE HAND

ELEVATION OF SPECIAL PSA-23 TEE

SHOWING BENT PLATES BOLT SPACING

SCALE: HORIZ. 3/4" = 1'- 0"
VERT. 3/8" = 1'- 0"

SCALE: 3"=1'
0 3" 6" 9" 12"

US Army Corps of Engineers
NEW ORLEANS DISTRICT

MARK	DESCRIPTION	DATE	APPR.

MARK	DESCRIPTION	DATE	APPR.

DESIGNED BY: USACE - NEW ORLEANS
DWN BY: CKD BY:
SUBMITTED BY:
DATE: MAY 2008
SOLICITATION NO.:
CONTRACT NO.:
FILE NUMBER: A/E TYPICALS
PLOT SCALE: 1" = 1'
PLOT DATE:
SIZE: ANSI D
FILE NAME: AE-TYP21.DGN

U.S. ARMY CORPS OF ENGINEERS
NEW ORLEANS DISTRICT
NEW ORLEANS, LOUISIANA

USACE - NEW ORLEANS
HURRICANE DESIGN GUIDELINES
A/E TYPICAL DRAWINGS
-
WALL JOINTS
SHEET PILE DETAILS
(2 OF 2)

SHEET IDENTIFICATION
X-00

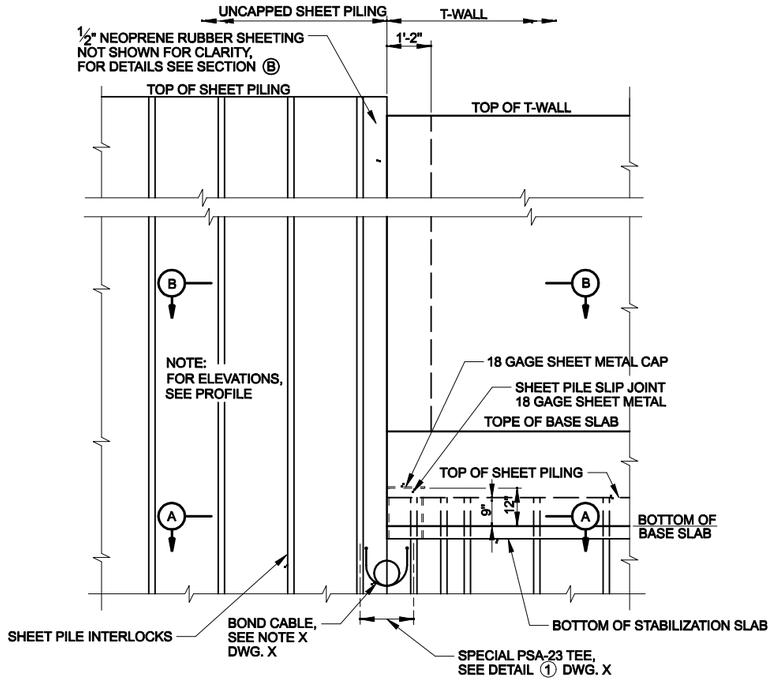

FLOOD SIDE ELEVATION
I-WALL TO T-WALL

SCALE: ¾" = 1'- 0"

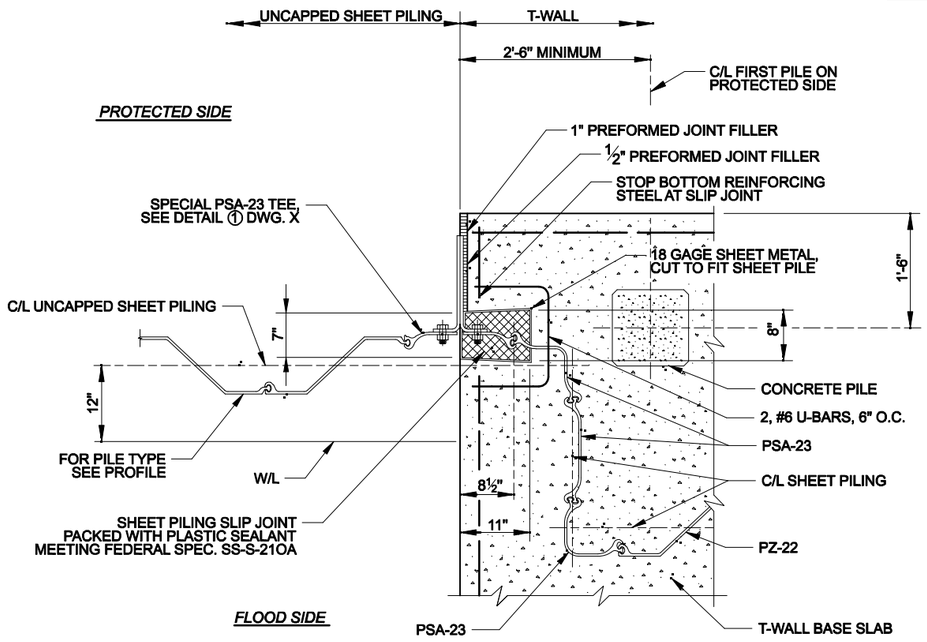

SECTION Ⓐ

SCALE: 1" = 1'- 0"

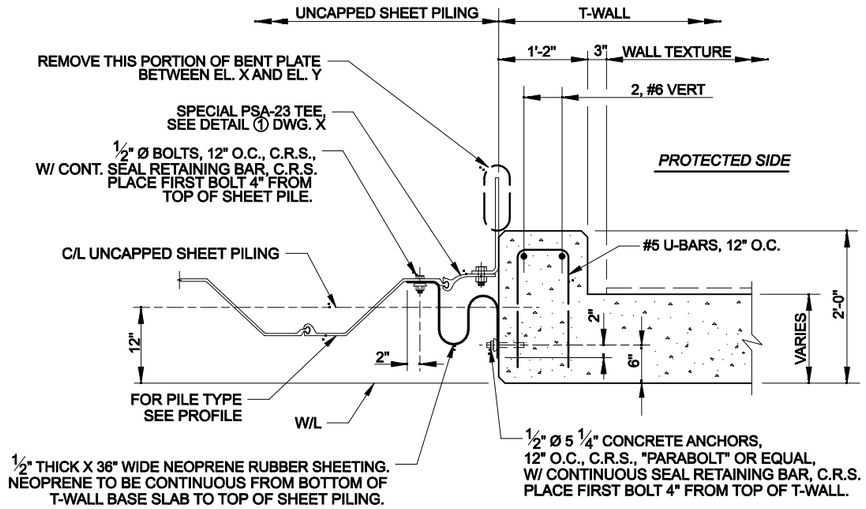

SECTION Ⓑ

SCALE: 1" = 1'- 0"

SCALE: 1/2"=1'

0 1' 2' 4'

SCALE: 1"=1'

0 1' 2'

US Army Corps of Engineers®
NEW ORLEANS DISTRICT

MARK	DESCRIPTION	DATE	APPR.

MARK	DESCRIPTION	DATE	APPR.

U.S. ARMY CORPS OF ENGINEERS
NEW ORLEANS DISTRICT
NEW ORLEANS, LOUISIANA

DESIGNED BY: USACE - NEW ORLEANS
DWN BY:
SUBMITTED BY:
CKD BY:
PLOT SCALE: 1:1
PLOT DATE:
SIZE: ANSI D
FILE NAME: AE-TYP22.DGN
DATE: MAY 2008
SOLICITATION NO.:
CONTRACT NO.:
FILE NUMBER: AE-TYP22.45

USACE - NEW ORLEANS
HURRICANE DESIGN GUIDELINES
A/E TYPICAL DRAWINGS
-
WALL JOINTS
SHEET PILE TO T-WALL
-

SHEET IDENTIFICATION
X-00

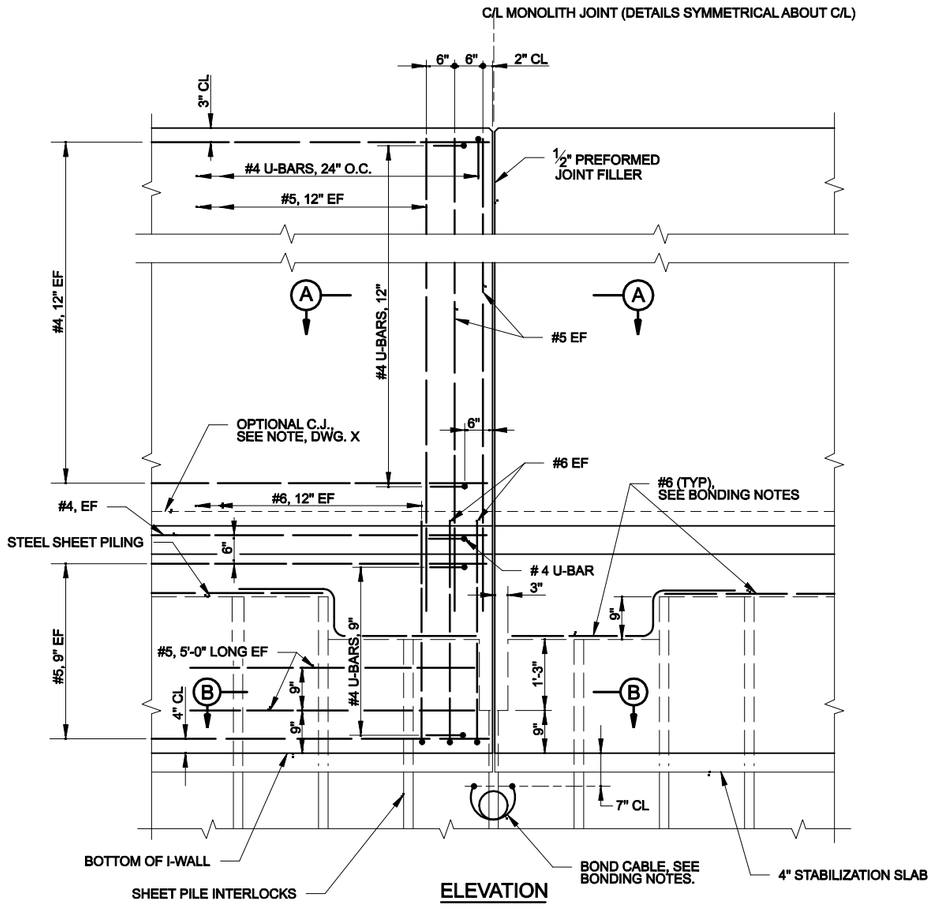

ELEVATION

DETAIL OF I-WALL MONOLITH JOINTS

SCALE: 1" = ¾"- 0"

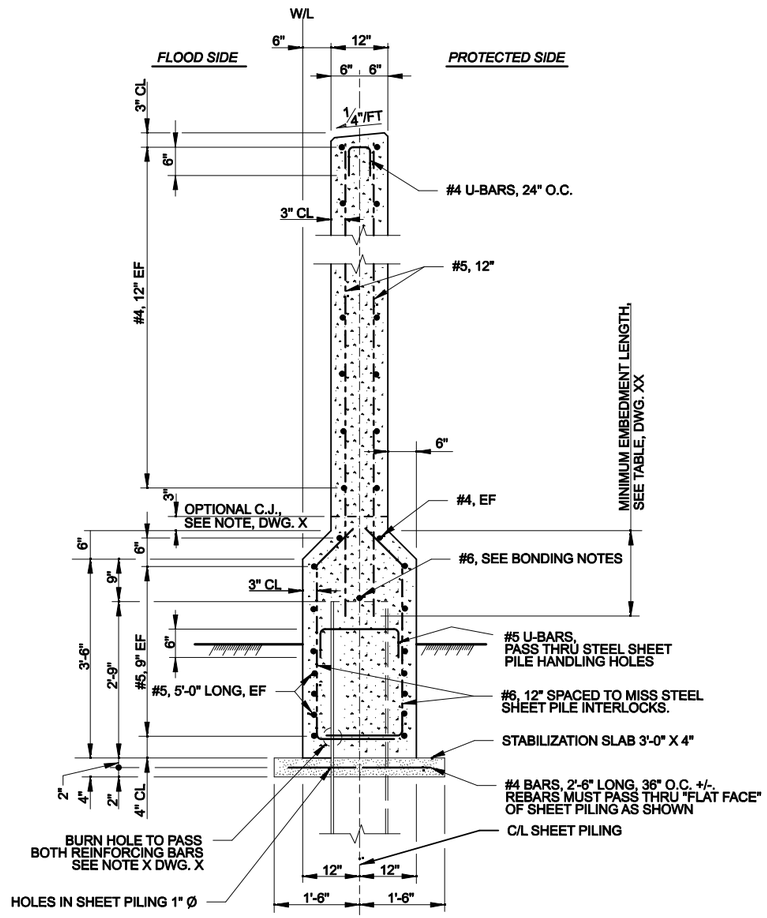

TYPICAL I-WALL SECTION

SCALE: 1" = ¾"- 0"

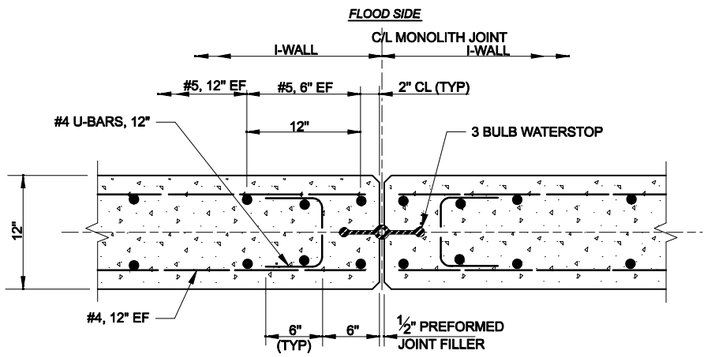

SECTION (A)

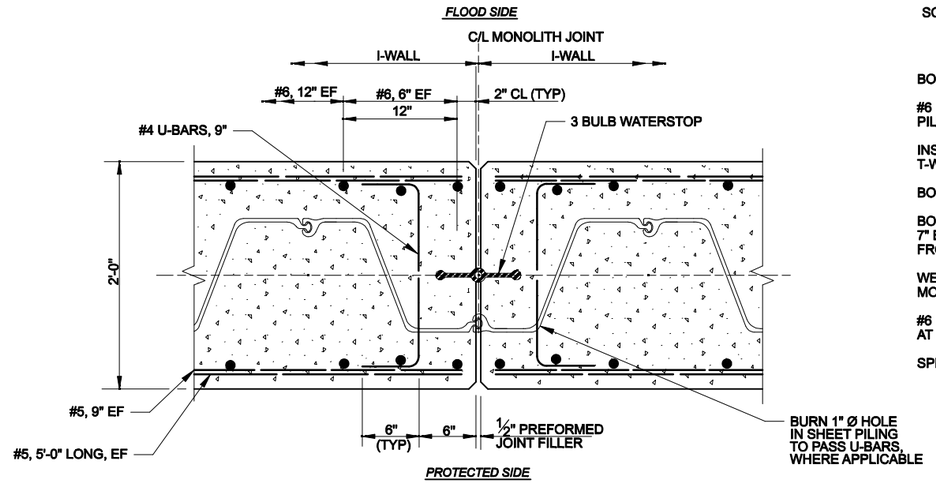

SECTION (B)

TYPICAL REINFORCEMENT AT MONOLITH JOINTS

SCALE: 1 ½" = 1' - 0"

BONDING NOTES:

#6 REINFORCING BAR TO BE WELDED TO THE TOP OF EACH STEEL SHEET PILE. #6 REINFORCING BAR SHALL NOT EXTEND ACROSS THE MONOLITH JOINT.

INSTALL BOND CABLE AT ALL I-WALL JOINTS AND AT ALL TRANSITIONS FROM T-WALL TO I-WALL JOINTS.

BOND CABLE SHALL HAVE AN 8" DIAMETER LOOP TO ALLOW FOR STRESSES.

BOND CABLES SHALL BE WELDED AS SPECIFIED TO ADJACENT STEEL PILES 7" BELOW BOTTOM OF CONCRETE CAP FOR I-WALL JOINTS AND AT TRANSITION FROM T-WALL TO I-WALL JOINTS.

WELDED CONNECTIONS SHALL BE COATED WITH SPLICING EPOXY TO OBTAIN MOISTURE PROOF JOINT. SEE SPECIFICATIONS.

#6 REINFORCING BARS SHALL BE WELDED TO THE LAST THREE SHEET PILINGS AT EACH END OF THE MONOLITH AS SHOWN FOR CONTINUITY.

SPLICING OF #6 REINFORCING BAR WILL NOT BE ALLOWED.

SCALE: 3/4"=1'

0 1' 2' 3'

SCALE: 1-1/2"=1'

0 6" 1' 2'

US Army Corps of Engineers®
NEW ORLEANS DISTRICT

MARK	DESCRIPTION	DATE	APPR.

MARK	DESCRIPTION	DATE	APPR.

DESIGNED BY: USACE - NEW ORLEANS
DRWN BY:
SUBMITTED BY:
DATE: MAY 2008
CKD BY:
PLOT SCALE: 1" = 1"
SIZE: ANSI D
SOLICITATION NO.:
CONTRACT NO.:
PLOT DATE:
FILE NAME: AS-TYP2&3GN
FILE NUMBER: A/E TYP2&3

U.S. ARMY CORPS OF ENGINEERS
NEW ORLEANS DISTRICT
NEW ORLEANS, LOUISIANA

USACE - NEW ORLEANS
HURRICANE DESIGN GUIDELINES
A/E TYPICAL DRAWINGS
~
WALL JOINTS
I-WALL TO I-WALL
~

SHEET IDENTIFICATION
X-00

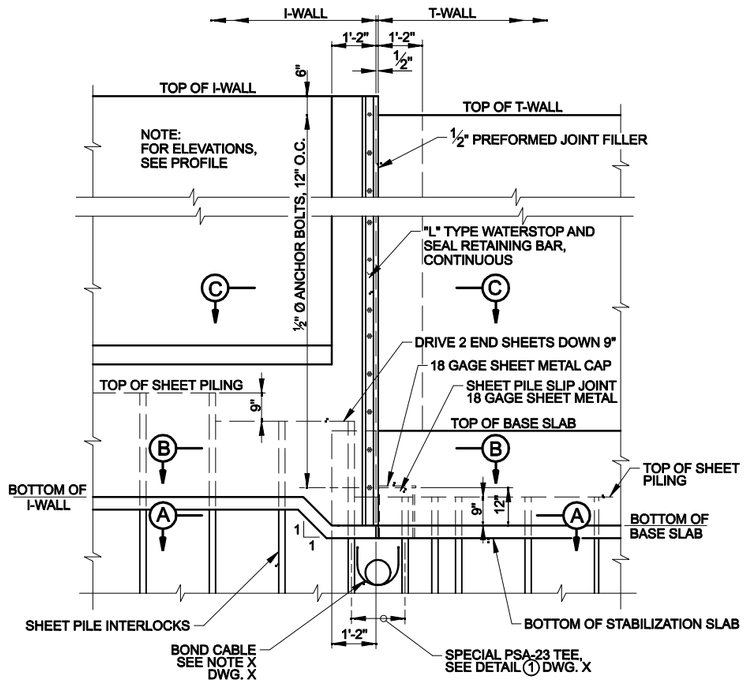

FLOOD SIDE ELEVATION

I-WALL TO T-WALL

SCALE: ½" = 1'- 0"

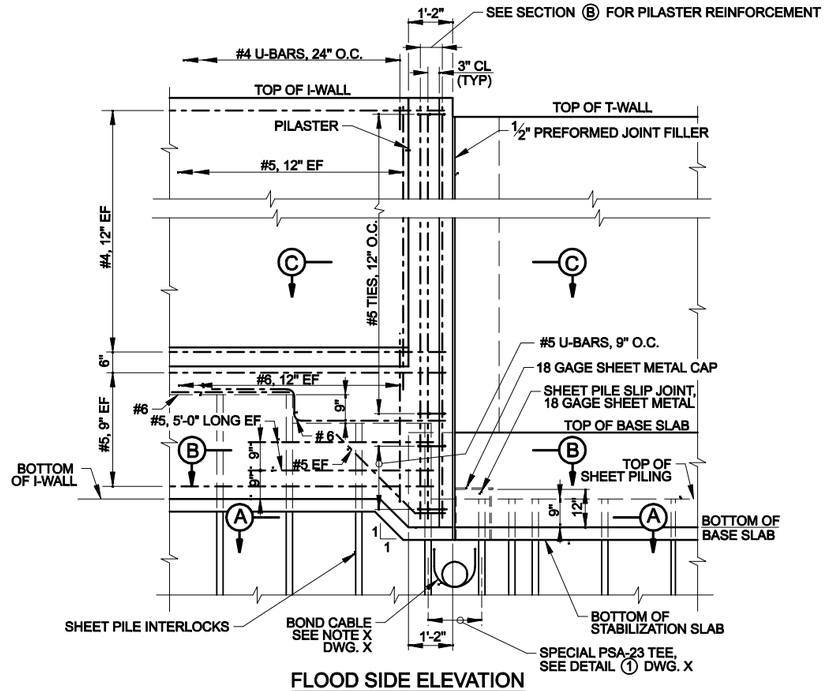

FLOOD SIDE ELEVATION

REINFORCEMENT
I-WALL TO T-WALL

SCALE: ½" = 1'- 0"

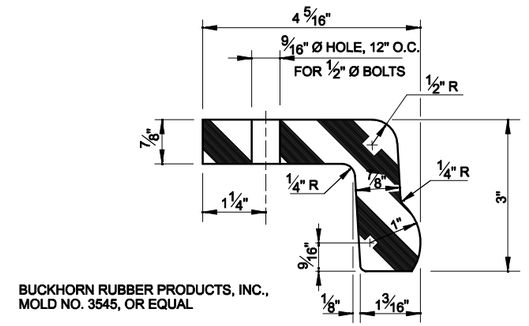

BUCKHORN RUBBER PRODUCTS, INC.,
MOLD NO. 3545, OR EQUAL

" L " TYPE WATERSTOP

SCALE: 1" = 1' - 0"

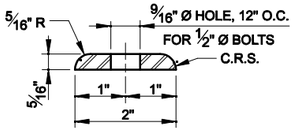

SEAL RETAINING BAR

SCALE: 1" = 1' - 0"

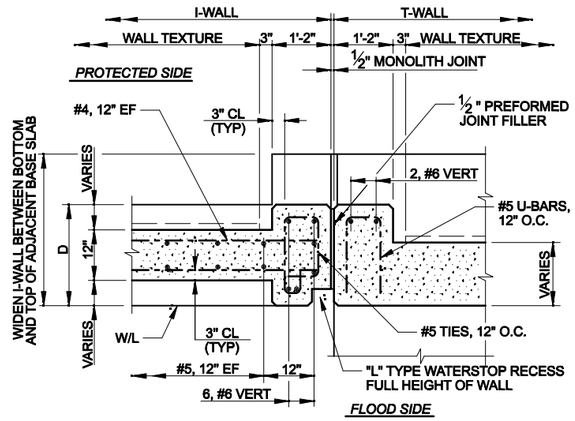

SECTION Ⓒ

SCALE: 1" = 1'- 0"

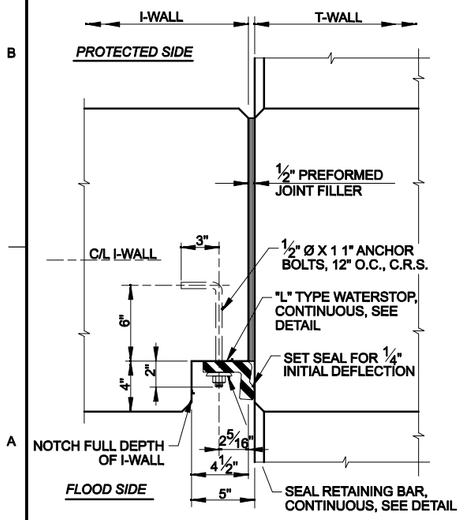

PLAN

I-WALL TO T-WALL

SCALE: 3" = 1' - 0"

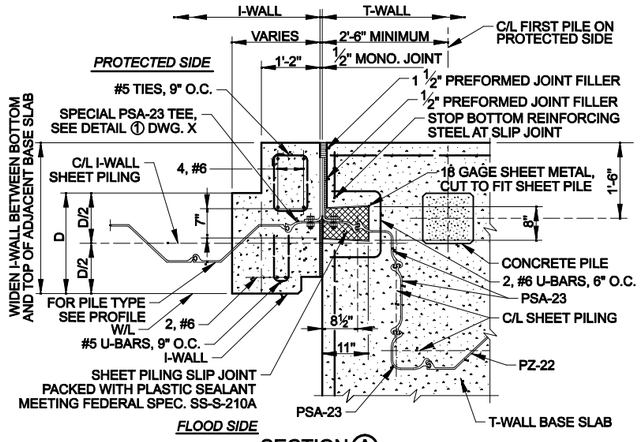

SECTION Ⓐ

SCALE: 1" = 1'- 0"

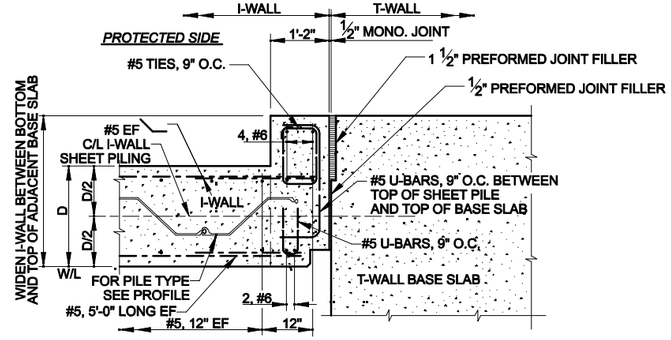

SECTION Ⓑ

SCALE: 1" = 1'- 0"

SCALE:1/2"=1'

0 1' 2' 4'

SCALE: 3"=1'

0 3" 6" 9" 12"

SCALE:1"=1"

0 1" 2"

US Army Corps of Engineers®
NEW ORLEANS DISTRICT

MARK	DESCRIPTION	DATE	APPR.

DESIGNED BY: USACE - NEW ORLEANS
DWN BY:
SUBMITTED BY:
DATE: MAY 2008
SOLICITATION NO.:
CONTRACT NO.:
FILE NUMBER: AE-TITLE-AS
PLOT SCALE: 1" = 1"
PLOT DATE:
SIZE: ANSI D
FILE NAME: AE-TYP2A.DGN

U.S. ARMY CORPS OF ENGINEERS
NEW ORLEANS DISTRICT
NEW ORLEANS, LOUISIANA

USACE - NEW ORLEANS
HURRICANE DESIGN GUIDELINES
A/E TYPICAL DRAWINGS
-
WALL JOINTS
I-WALL TO T-WALL
-

SHEET IDENTIFICATION
X-00

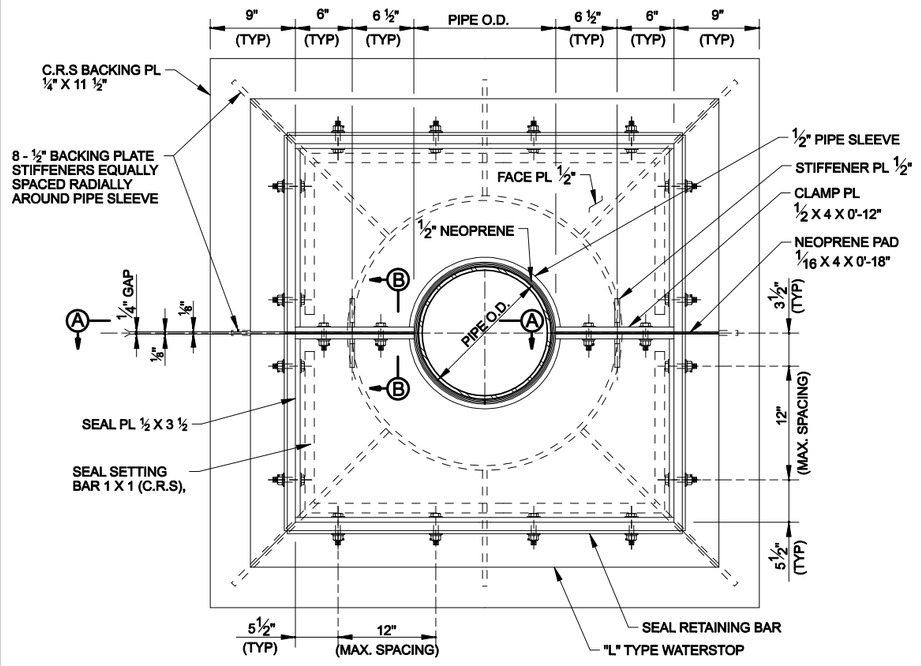

FLOOD SIDE ELEVATION

FRONTING PROTECTION UTILITY DETAIL

SCALE: 1 ½" = 1' - 0"

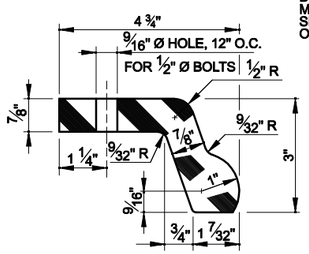

BUCKHORN RUBBER PRODUCTS, INC.
MOLD NO. 6404,
SPECIFICATION: NATURAL-177
OR EQUAL

" L " TYPE WATERSTOP

SCALE: 6" = 1' - 0"

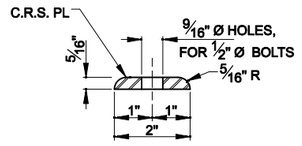

SEAL RETAINING BAR

SCALE: 6" = 1' - 0"

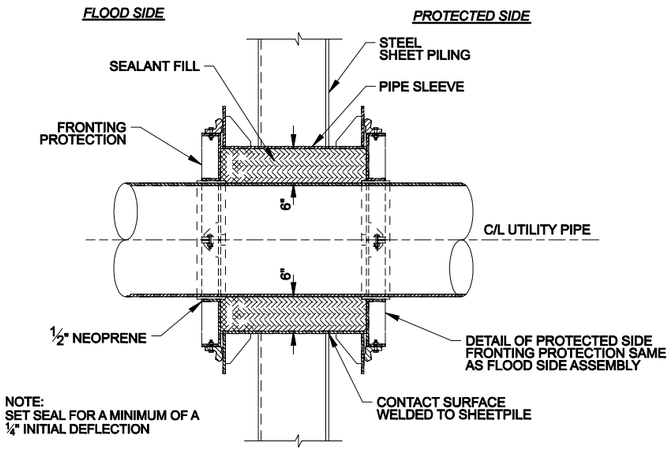

SECTION THRU SHEETPILE WALL

NTS

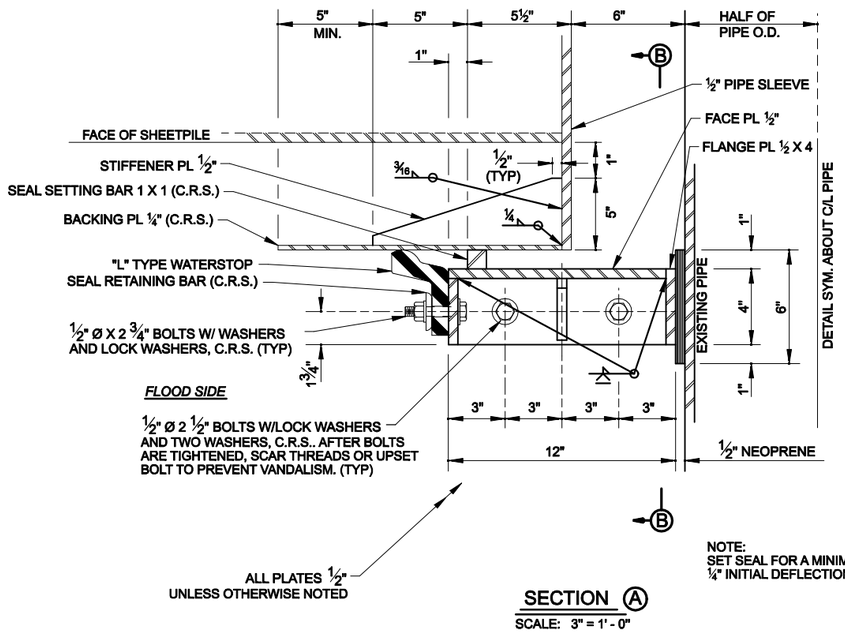

SECTION (A)

SCALE: 3" = 1' - 0"

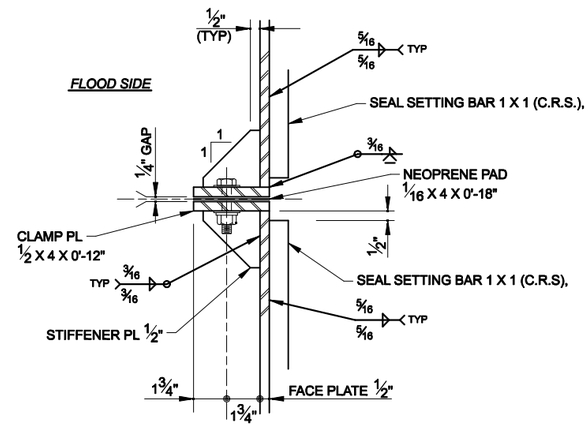

SECTION (B)

SCALE: 3" = 1' - 0"

NOTES:

1. THIS DETAIL IS BASED ON THE NEW WALL FACE BEING PERPENDICULAR TO THE PIPE.
2. GAS AND PETROLEUM PIPELINES MAY REQUIRE THAT A 1.5" MINIMUM CONCRETE COATING BE APPLIED BEFORE THE SLEEVE IS INSTALLED.
3. ALL FLANGE MATERIAL ATTACHED TO THE SHEETPILE SHALL BE STEEL.
4. ALL MATERIAL FOR FRONTING PROTECTION SHALL BE ALUMINUM, UNLESS OTHERWISE NOTED.
5. ALL STRUCTURAL ALUMINUM PLATES SHALL BE ASTM B 209, TYPE 6061-T6
6. ALL CORROSION-RESISTANT STEEL (C.R.S.) SHALL BE TYPE 316.
7. WELDS SHOWN ARE TYPICAL FOR SIMILAR JOINTS AND ALL WELDS ON WALL SIDE OF FACE PLATE SHALL BE FLUSH WITH BASE METAL.
8. AFTER THE TWO FRAMES ARE LOOSELY CLAMPED ON THE PIPE, THE TOTAL ASSEMBLY SHALL BE PUSHED AGAINST THE WALL, SETTING THE SEALS, THEN TIGHTEN CLAMP PLATES TO CLOSE THE ¼" GAP
9. UPON COMPLETION OF THE ASSEMBLY, APPLY A ANAEROBIC ADHESIVE (LOCTITE THREADLOCKER 290 OR EQUAL) TO ALL NUT AND BOLT JUNCTURES.

SCALE:3/4"=1'
0 1' 2' 3'

SCALE:1-1/2"=1'
0 6" 1' 2'

SCALE: 3"=1'
0 3" 6" 9" 12"

US Army Corps of Engineers
NEW ORLEANS DISTRICT

MARK	DESCRIPTION	DATE	APPR.

MARK	DESCRIPTION	DATE	APPR.

U.S. ARMY CORPS OF ENGINEERS
NEW ORLEANS DISTRICT
NEW ORLEANS, LOUISIANA

DESIGNED BY: USACE - NEW ORLEANS
DWN BY:
CKD BY:
SUBMITTED BY:
DATE: MAY 2008
SOLICITATION NO.:
CONTRACT NO.:
PLOT SCALE: 1 = 1'
PLOT DATE:
FILE NUMBER: A/E TYPICALS
SIZE: ANSI D
FILE NAME: AE-TYP02.DGN

USACE - NEW ORLEANS
HURRICANE DESIGN GUIDELINES
A/E TYPICAL DRAWINGS
~
UTILITY DETAILS
SHEET PILE PENETRATION
~

SHEET IDENTIFICATION
X-00

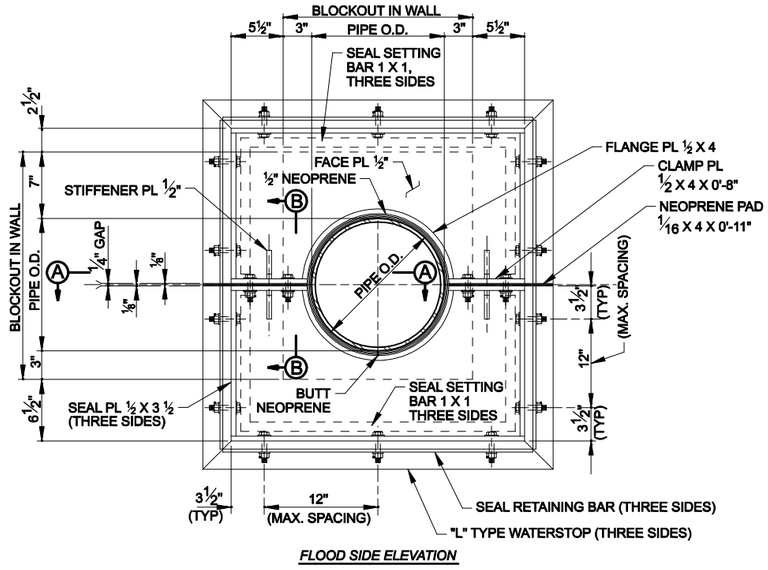

FLOOD SIDE ELEVATION

FRONTING PROTECTION UTILITY DETAIL

SCALE: 1 ½" = 1' - 0"

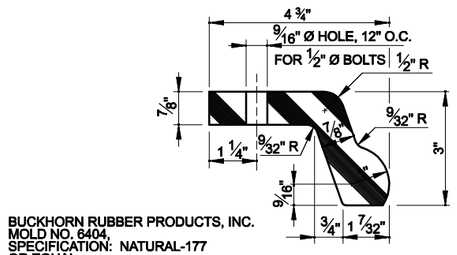

BUCKHORN RUBBER PRODUCTS, INC.
MOLD NO. 6404,
SPECIFICATION: NATURAL-177
OR EQUAL

" L " TYPE WATERSTOP

SCALE: 6" = 1' - 0"

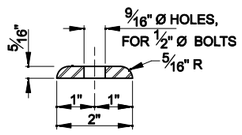

SEAL RETAINING BAR

SCALE: 6" = 1' - 0"

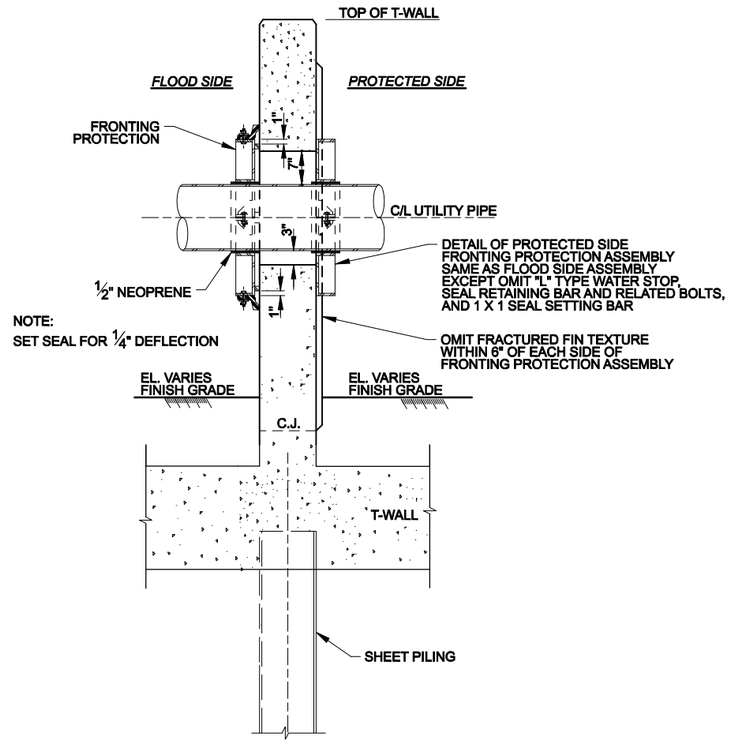

SECTION THRU FLOODWALL

SCALE: ¾" = 1' - 0"

NOTES:

1. THIS DETAIL WAS DRAWN FOR A 14" O.D. PIPE.
2. THIS DETAIL IS BASED ON THE NEW WALL FACE BEING PERPENDICULAR TO THE PIPE.
3. GAS AND PETROLEUM PIPELINES MAY REQUIRE THAT A 1.5" MINIMUM CONCRETE COATING BE APPLIED BEFORE THE SLEEVE IS INSTALLED.
4. ALL MATERIAL FOR FRONTING PROTECTION SHALL BE ALUMINUM, UNLESS OTHERWISE NOTED.
5. ALL STRUCTURAL ALUMINUM PLATES SHALL BE ASTM B 209, TYPE 6061-T6
6. ALL CORROSION-RESISTANT STEEL (C.R.S.) SHALL BE TYPE 316.
7. WELDS SHOWN ARE TYPICAL FOR SIMILAR JOINTS AND ALL WELDS ON WALL SIDE OF FACE PLATE SHALL BE FLUSH WITH BASE METAL.
8. AFTER THE TWO FRAMES ARE LOOSELY CLAMPED ON THE PIPE, THE TOTAL ASSEMBLY SHALL BE PUSHED AGAINST THE WALL, SETTING THE SEALS, THEN TIGHTEN CLAMP PLATES TO CLOSE THE ¼" GAP
9. UPON COMPLETION OF THE ASSEMBLY, APPLY A ANAEROBIC ADHESIVE (LOCTITE THREADLOCKER 290 OR EQUAL) TO ALL NUT AND BOLT JUNCTURES.

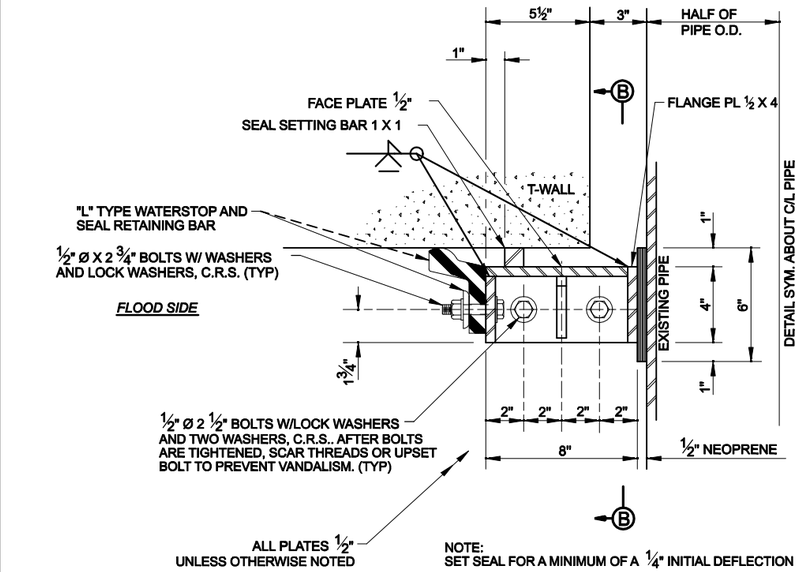

SECTION Ⓐ

SCALE: 6" = 1' - 0"



NOT DEFLECTED ¼" DEFLECTION

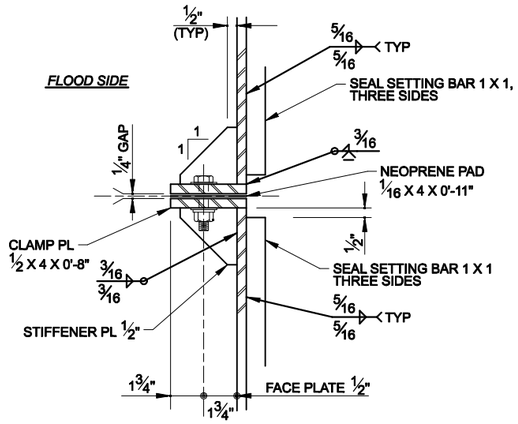

SECTION Ⓑ

SCALE: 6" = 1' - 0"

SCALE:3/4"=1'
0 1' 2' 3'

SCALE:1-1/2"=1'
0 6" 1' 2'

SCALE: 6"=1'
0 3" 6" 9" 12"

US Army Corps of Engineers®
NEW ORLEANS DISTRICT

MARK	DESCRIPTION	DATE	APPR.
MARK	DESCRIPTION	DATE	APPR.

DESIGNED BY: USACE - NEW ORLEANS
DWN BY:
SUBMITTED BY:
DATE: MAY 2008
SOLICITATION NO.:
CONTRACT NO.:
PLOT SCALE: 1.5" = 1"
PLOT DATE:
FILE NUMBER: A/E TYPICALS
SIZE: ANSI D
FILE NAME: AE-TYP01.DGN

U.S. ARMY CORPS OF ENGINEERS
NEW ORLEANS DISTRICT
NEW ORLEANS, LOUISIANA

USACE - NEW ORLEANS
HURRICANE DESIGN GUIDELINES
A/E TYPICAL DRAWINGS

UTILITY DETAILS
T-WALL PENETRATION

SHEET IDENTIFICATION
X-00

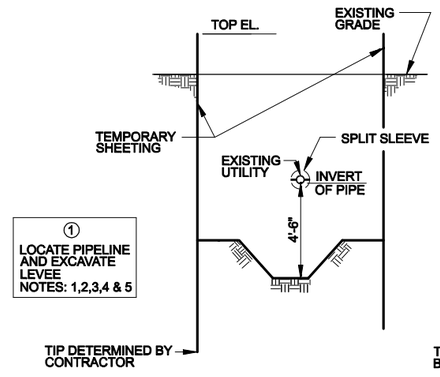

① LOCATE PIPELINE AND EXCAVATE LEVEE
NOTES: 1,2,3,4 & 5

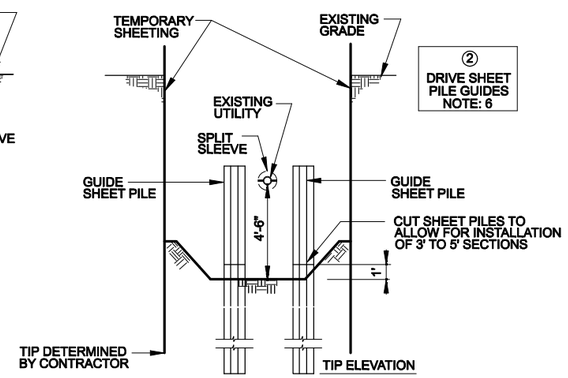

② DRIVE SHEET PILE GUIDES
NOTE: 6

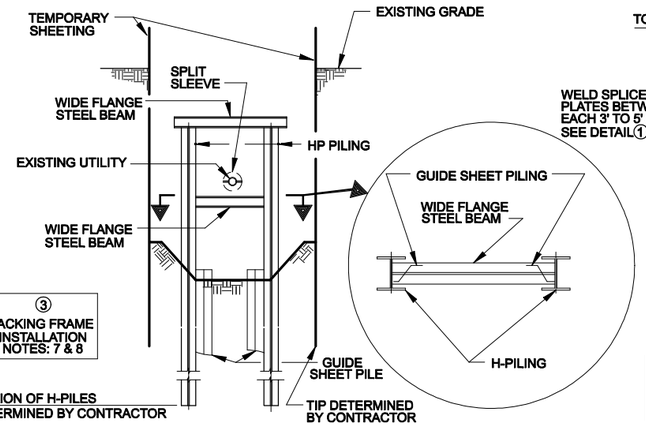

③ JACKING FRAME INSTALLATION
NOTES: 7 & 8

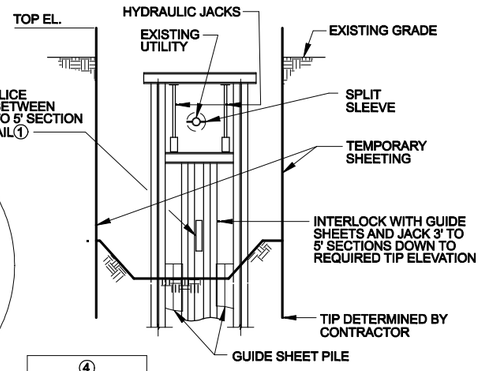

④ JACK AND WELD 3' TO 5' SECTIONS
NOTES: 9,10, & 11

SHEET PILING NOTE:
MINIMUM SECTION OF SHEET PILING TO BE DETERMINED BY USACE.

EXCAVATION NOTE:
THE CONTRACTOR SHALL BE RESPONSIBLE FOR THE DESIGN OF THE EXCAVATION, SEE JACKING NOTES 4 & 5.

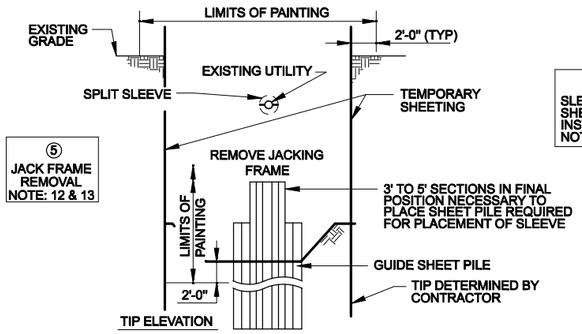

⑤ JACK FRAME REMOVAL
NOTE: 12 & 13

⑥ SLEEVE & REMAINING SHEET PILE INSTALLATION
NOTES: 14, 15 & 16

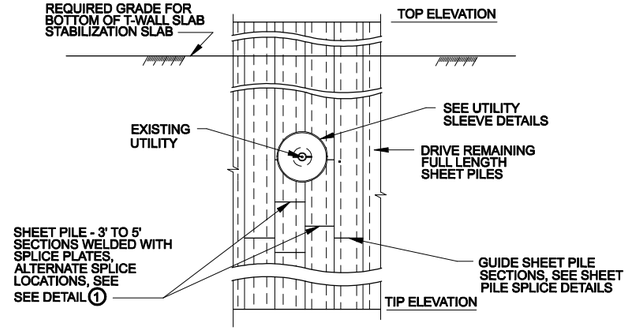

SECTION Ⓐ

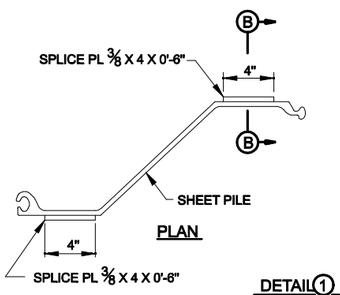

PLAN

DETAIL①
SHEET PILE SPLICE

WELD NOTE:
WELDS SHOWN ON SECTION Ⓑ

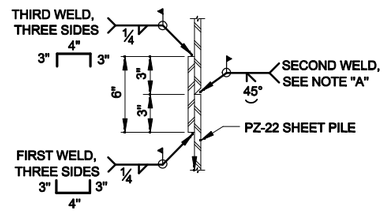

SECTION Ⓑ

NOTE "A":
GROOVE WELD SHALL EXTEND THE FULL LENGTH OF THE SHEET PILE WEB AND FLANGES EXCLUDING THE INTERLOCKS.

SPLICE PLATE NOTE:
TWO SPLICE PLATES PER SHEET PILE MINIMUM ON ANY SHEET PILE SPLICE.

GENERAL NOTES:

1. ANY PIPELINE PENETRATION THRU THE FLOOD PROTECTION SHALL CONFORM TO USACE PERMIT STANDARDS DRAWINGS 5A THRU 5C, FILE NUMBER H-8-29027, DATED OCTOBER 2002, AS SHOWN ON DRAWING 13.
2. STEEL PIPE SLEEVES SHALL BE ASTM A53, TYPE S, GRADE B, PLAIN END. FOR OUTER EDGES WITH DIAMETER LESS THAN OR EQUAL TO 24 INCHES.

SLEEVE SCHEDULE	
SHEET PILE DEPTH "D"	SLEEVE LENGTH
12" OR LESS	3'-0"
GREATER THAN 12"	3'-4"

JACKING NOTES:

1. RESERVED
2. CONTRACTOR FOR THE UTILITY SHALL LOCATE, MARK, EXCAVATE AND EXPOSE THE UTILITY AS NECESSARY FOR PLACEMENT OF THE SPLIT SLEEVE CARRIER. MARKERS PLACED FOR THE UTILITY SHALL BE CLEARLY VISIBLE, SO THE CONTRACTOR CAN CLEARLY LOCATE THE UTILITY DURING CONSTRUCTION. PERMANENT MARKERS SHALL BE PLACED BY THE CONTRACTOR FOR THE UTILITY AFTER COMPLETION OF THE CONSTRUCTION PROJECT.
3. CONTRACTOR FOR THE UTILITY SHALL PLACE THE UTILITY IN THE SPLIT-SLEEVE CARRIER PRIOR TO ANY WORK BY THE CONTRACTOR. THE CONTRACTOR MAY BE REQUIRED BY THE UTILITY OWNER TO SUPPORT THE UTILITY WITHIN THE EXCAVATION.
4. THE CONTRACTOR IS RESPONSIBLE FOR ALL CONSTRUCTION ACTIVITIES REGARDING EXCAVATING FOR AND DRIVING OF THE SHEET PILE AND PLACING THE RELOCATION/UTILITY THROUGH THE SHEET PILE WALL.
5. THE CONTRACTOR SHALL EXCAVATE THE EXISTING GROUND TO AN ELEVATION 4'-6" BELOW OF THE INVERT OF THE PIPELINE. THE CONTRACTOR SHALL BE RESPONSIBLE FOR THE DESIGN OF THE EXCAVATION. THE DESIGN SHALL BE STAMPED BY A REGISTERED ENGINEER, LICENSED IN THE STATE WHERE THE PROJECT IS LOCATED.
6. THE CONTRACTOR SHALL DRIVE TWO (2) SHEET PILE GUIDES AS SHOWN IN SEQUENCE ② ABOVE.
7. THE CONTRACTOR SHALL DRIVE H-PILES TO A DEPTH DETERMINED BY DESIGN CALCULATIONS.
8. THE CONTRACTOR SHALL WELD A WIDE FLANGE (WF) CROSS BEAM TO THE TOP OF THE H-PILES AND INSTALL WIDE FLANGE (WF) JACKING BEAM WITH HYDRAULIC JACKS SUPPORTED BY THE CROSS BEAM.
9. THE CONTRACTOR SHALL INTERLOCK 3' TO 5' LENGTH SHEET PILES AND JACK BETWEEN SHEET PILE GUIDES AS SHOWN IN SEQUENCE ④.
10. AFTER THE FIRST 3' TO 5' PANEL HAS BEEN DRIVEN, RAILROAD GATE CONTRACTOR SHALL WELD THE NEXT 3' TO 5' PANEL TO THE PREVIOUS PANEL USING SPLICE PLATES (SEE DETAIL ①).
11. RAILROAD GATE CONTRACTOR SHALL REPEAT STEPS IN NOTES 9 AND 10 UNTIL THE SHEET PILING BELOW THE PIPELINE IS DRIVEN TO AN ELEVATION REQUIRED FOR PLACEMENT OF SHEET PILES WHICH ARE NECESSARY FOR PLACEMENT OF OUTER SLEEVE.
12. THE CONTRACTOR SHALL REMOVE JACKING FRAME.
13. ALL SHEET PILE ABOVE AN ELEVATION TWO (2) FEET BELOW THE EXCAVATION SHALL BE PAINTED IN ACCORDANCE WITH SPECIFICATION 09940. THE HORIZONTAL LIMITS OF PAINTING SHALL BE TWO (2) FEET BEYOND THE EDGE OF THE EXCAVATION.
14. THE CONTRACTOR SHALL INSTALL SHEET PILING NECESSARY TO PLACE SLEEVE, AND AFTER SLEEVE PLACEMENT IS COMPLETE, PLACE THE REMAINING SHEET PILE.
15. THE CONTRACTOR SHALL INSTALL SHEET PILING TO GRADE AS REQUIRED BY USACE. NOTE: IF PILING BELOW THE UTILITY IS DRAGGED DOWNWARD DURING DRIVING OF ADJACENT PILING, CONTRACTOR SHALL ADD LENGTH BY WELDING NEW PILING TO REQUIRED GRADE. DO NOT PULL SHEET PILE UP TO GRADE.
16. THE CONTRACTOR SHALL BACKFILL THE EXCAVATION WITH THE SAME MATERIAL EXCAVATED TO THE REQUIRED GRADE. THE MATERIAL SHALL BE REPLACED WITHOUT COMPACTION AND AS CLOSE TO ITS IN-SITU STATE AS POSSIBLE. AT NO TIME SHALL THE SHEET PILE BE PULLED TO GRADE IF IT HAS MOVED.

US Army Corps of Engineers®
NEW ORLEANS DISTRICT

MARK	DESCRIPTION	DATE	APPR.	MARK	DESCRIPTION	DATE	APPR.

DESIGNED BY: USACE - NEW ORLEANS
DWN BY:
CKD BY:
SUBMITTED BY:
DATE: MAY 2008
SOLICITATION NO.:
CONTRACT NO.:
PLOT SCALE:
PLOT DATE:
FILE NUMBER: AE TYPDG.MS
FILE NAME: AE-TYP02.DGN
SIZE: ANSI D

U.S. ARMY CORPS OF ENGINEERS
NEW ORLEANS DISTRICT
NEW ORLEANS, LOUISIANA

USACE - NEW ORLEANS
HURRICANE DESIGN GUIDELINES
A/E TYPICAL DRAWINGS
-
UTILITY DETAILS
JACKING SHEET PILE UNDER UTILITIES
-

SHEET IDENTIFICATION
X-00

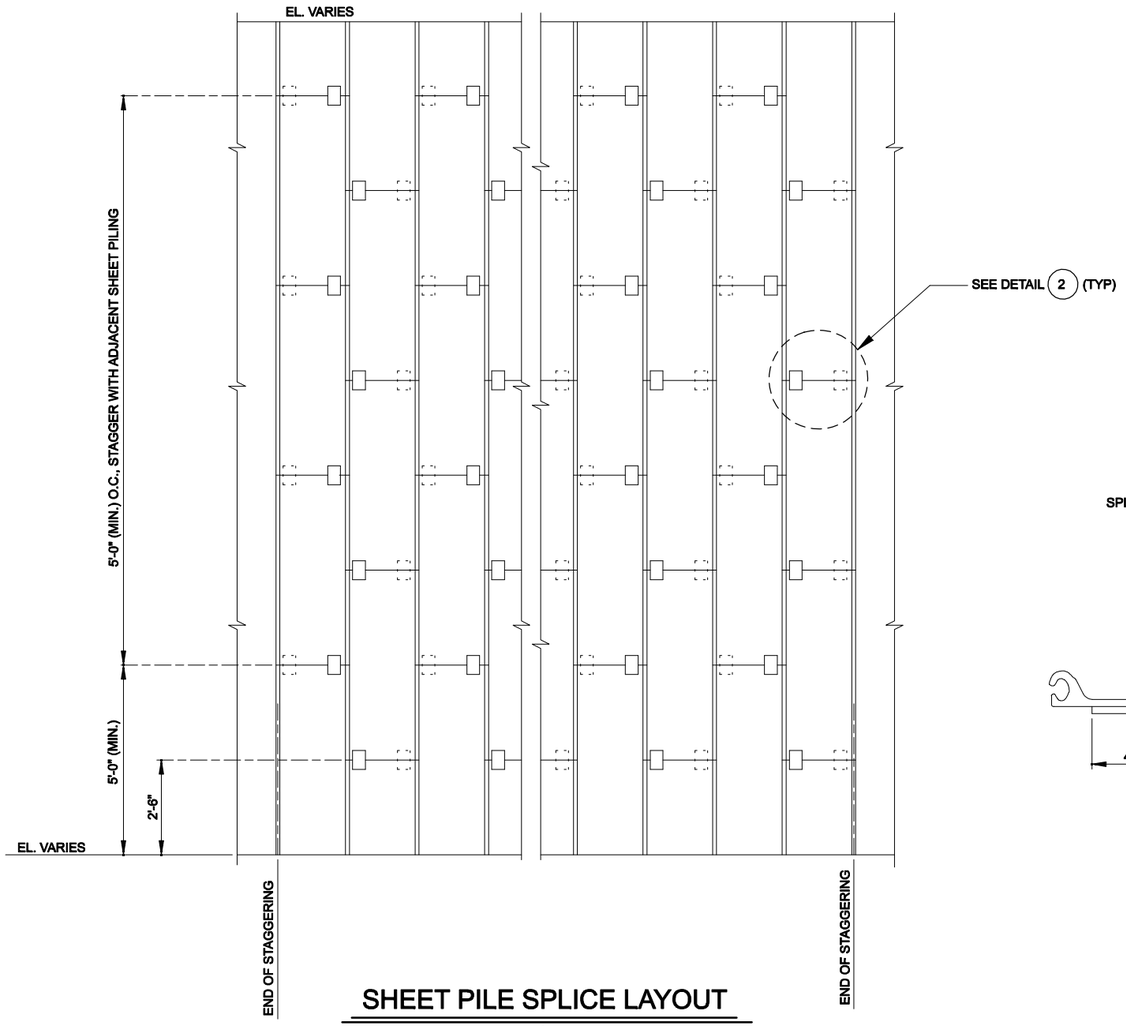

SHEET PILE SPLICE LAYOUT

SCALE: 1/2" = 1'-0"

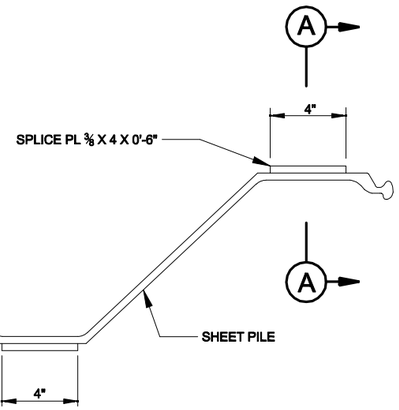

PLAN

NOTE "A"

GROOVE WELD SHALL EXTEND THE FULL LENGTH OF THE SHEET PILE WEB AND FLANGES EXCLUDING THE INTERLOCKS.

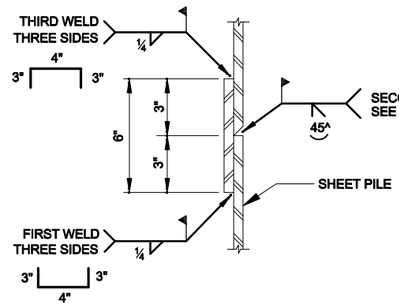

SECTION A

DETAIL 2

SCALE: 3" = 1'-0"

SCALE:1/2"=1'

0 1' 2' 4'

SCALE: 3"=1'

0 3" 6" 9" 12"

US Army Corps of Engineers®
NEW ORLEANS DISTRICT

MARK	DESCRIPTION	DATE	APPR.

MARK	DESCRIPTION	DATE	APPR.

DESIGNED BY: USACE - NEW ORLEANS
DWN BY:
SUBMITTED BY:
DATE: MAY 2008
SOLICITATION NO.:
CONTRACT NO.:
PLOT SCALE: 1" = 1"
PLOT DATE:
SIZE: ANSI D
FILE NUMBER: A/E TYPICALS
FILE NAME: A/E-TYP3S.DGN

U.S. ARMY CORPS OF ENGINEERS
NEW ORLEANS DISTRICT
NEW ORLEANS, LOUISIANA

USACE - NEW ORLEANS
HURRICANE DESIGN GUIDELINES
A/E TYPICAL DRAWINGS

UTILITY DETAILS
SPLICED SHEET PILE LAYOUTS

SHEET IDENTIFICATION
X-00

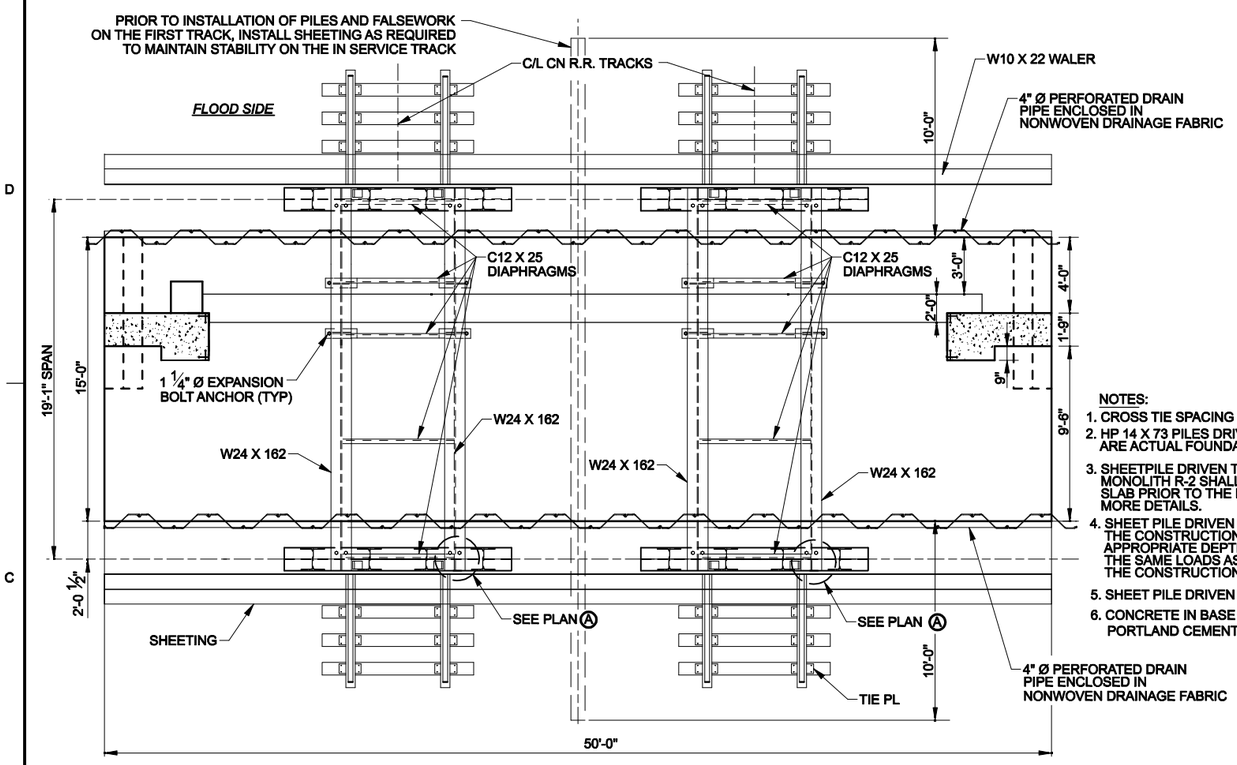

PROTECTED SIDE

PLAN - FALSEWORK

SCALE: 1/4 " = 1'-0"

NOTE: RAILS AND CROSS TIES NOT SHOWN FOR CLARITY

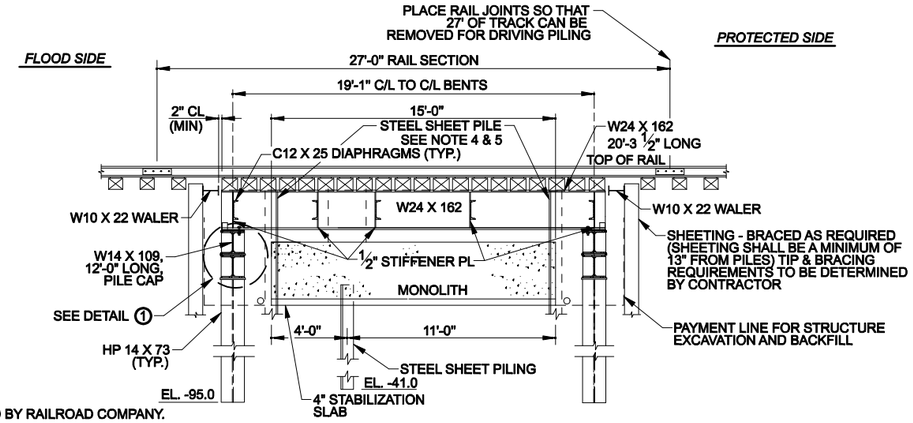

SECTION - FALSEWORK SPAN

SCALE: 1/4 " = 1'-0"

NOTES:

1. CROSS TIE SPACING TO BE DETERMINED BY RAILROAD COMPANY.
2. HP 14 X 73 PILES DRIVEN TO SUPPORT W14 X 109 PILE CAPS ARE ACTUAL FOUNDATION PILES FOR THE ADJACENT MONOLITHS.
3. SHEETPILE DRIVEN TO RETAIN THE BALLAST FOR CONSTRUCTION OF MONOLITH R-2 SHALL BE CUT OFF BELOW THE BOTTOM OF THE BASE SLAB PRIOR TO THE POURING OF THE SLAB. SEE DRAWING 18-20 FOR MORE DETAILS.
4. SHEET PILE DRIVEN NEXT TO SLAB SHALL BE USED FOR BRACING IN THE CONSTRUCTION OF ADJACENT MONOLITHS AND DRIVEN TO THE APPROPRIATE DEPTHS (DETERMINED BY CONTRACTOR) TO HANDLE THE SAME LOADS AS THE SHEET PILE BEING USED FOR BRACING IN THE CONSTRUCTION OF MONOLITH.
5. SHEET PILE DRIVEN NEXT TO SLAB SHALL BE NOTCHED TO PASS W24 X 162
6. CONCRETE IN BASE SLAB SHALL BE COMPOSED OF HIGH EARLY STRENGTH PORTLAND CEMENT IN LIEU OF REGULAR PORTLAND CEMENT

EXPANSION BOLT ANCHOR NOTE:

1 1/4" Ø X 18" LONG TRUBOLT WEDGE ANCHOR W/ NUT AND WASHER AS MFD. BY ITW RAMSET/REDHEAD, WOOD DALE, ILLINOIS OR EQUAL. ONE SIDE OF W24 X 162, SEE PLAN

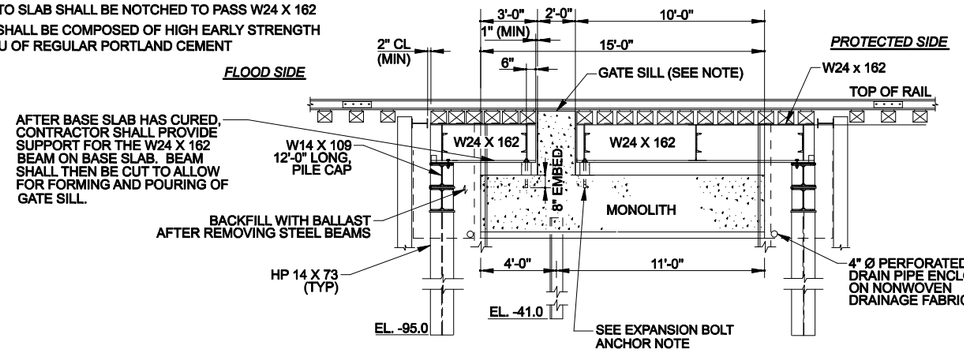

SECTION - FALSEWORK PARTIALLY REMOVED

SCALE: 1/4 " = 1'-0"

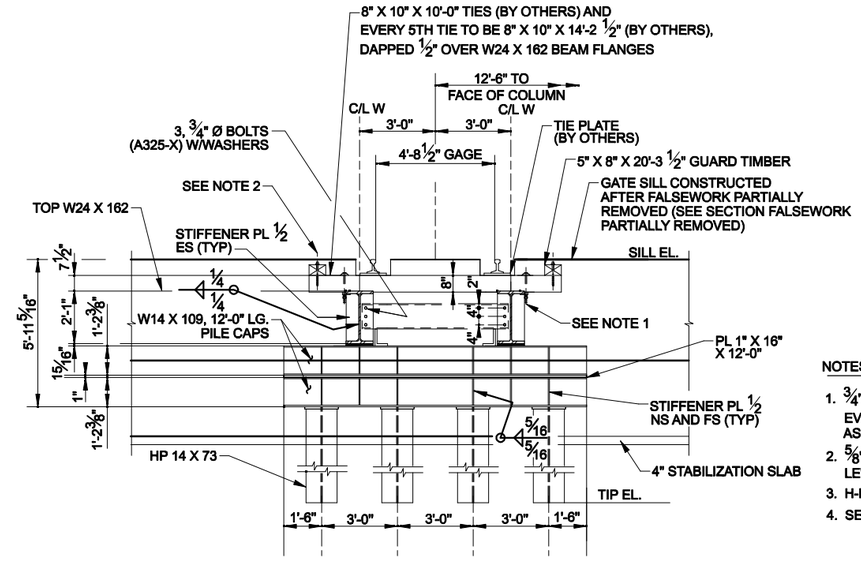

ELEVATION - FALSEWORK BENTS

SCALE: 3/8 " = 1'-0"

NOTES:

1. 3/4" Ø x 13" HEX BOLT (THREADED 4") AND NUT W/ EVER TIGHT WASHER, EVER TIGHT SPRING AND OFFSET SHOE TYPE A (X= 2", Y= 1/2"), AS MFD. BY LEWIS BOLT AND NUT CO., WAYZATA, MINNESOTA OR EQUAL
2. 5/8" Ø x 10" WASHER HEAD TIMBER DRIVE SPIKE AS MFD. BY LEWIS BOLT AND NUT CO., WAYZATA, MINNESOTA OR EQUAL
3. H-PILES MAY BE SPLICE, SEE DWG. XX FOR DETAILS.
4. SEE DRAWING XX FOR ALL SWING GATE MONOLITH DIMENSIONS

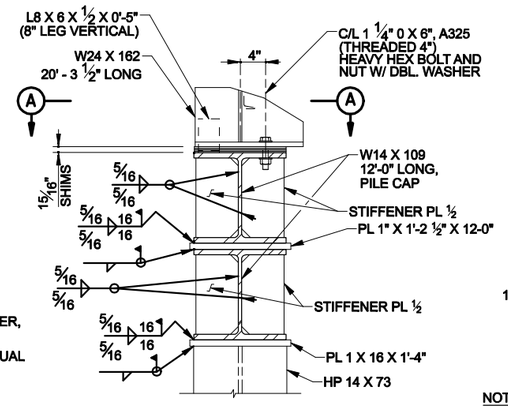

DETAIL 1

SCALE: 1"=1'-0"

NOTE:
CONCRETE IN GATE SILL SHALL BE HIGH EARLY STRENGTH PORTLAND CEMENT IN LIEU OF REGULAR PORTLAND CEMENT

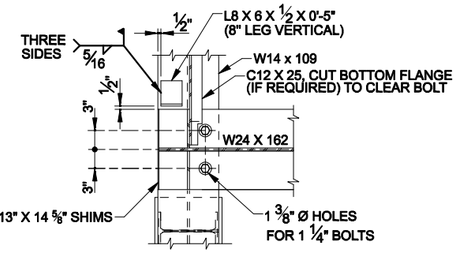

PLAN A

SCALE: 1"=1'-0"

NOTES:

1. FOR GENERAL NOTES, SEE DWG. 2.
2. EXTENDED DRAINAGE PIPE TO FACE OF EMBANKMENT SLOPE, PROTECT WITH 12" SOIL BLANKET.

SCALE:1/4"=1' 0 2' 4' 8'

SCALE: 1"=1' 0 1' 2'

SCALE:3/8"=1' 0 1' 3' 6'

US Army Corps of Engineers
NEW ORLEANS DISTRICT

MARK	DESCRIPTION	DATE	APPR.
MARK	DESCRIPTION	DATE	APPR.

DESIGNED BY: USACE - NEW ORLEANS
DWN BY:
SUBMITTED BY:
DATE: MAY 2006
SOLICITATION NO.:
CONTRACT NO.:
PLOT SCALE:
PLOT DATE:
FILE NUMBER: A/E TYPICALS
SIZE: ANSI D
FILE NAME: AE-TYPNOLDSN

U.S. ARMY CORPS OF ENGINEERS
NEW ORLEANS DISTRICT
NEW ORLEANS, LOUISIANA

USACE - NEW ORLEANS
HURRICANE DESIGN GUIDELINES
A/E TYPICAL DRAWINGS

RAILROAD DETAILS
CONSTRUCTION FALSEWORK DETAILS

SHEET IDENTIFICATION
X-00

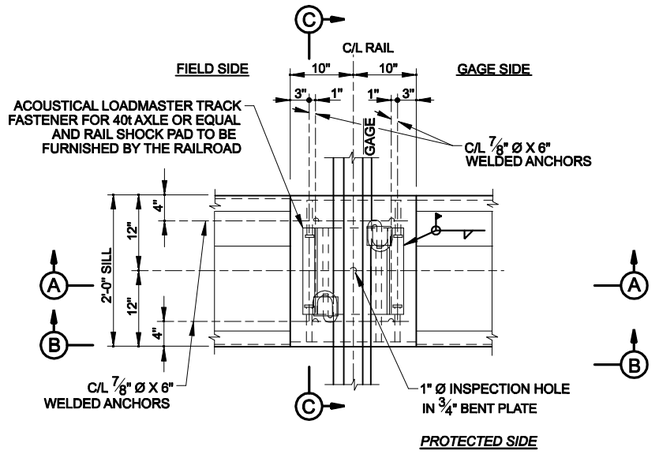

PLAN

SCALE: 1" = 1' - 0"

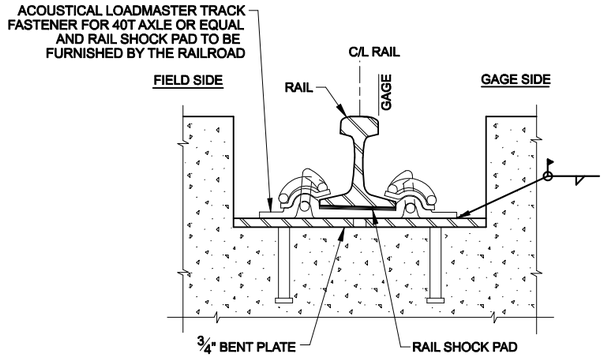

RAIL AND COMPONENT PARTS DETAIL

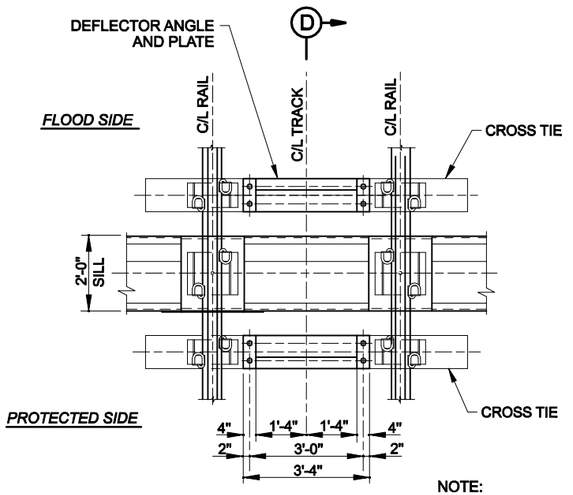

NOTE:
DEFLECTOR ANGLE AND PLATE TO BE PLACED ON FIRST TIE EACH SIDE OF SILL.

PLAN

DEFLECTOR ANGLE AND PLATE DETAIL

SCALE: 1/2" = 1'- 0"

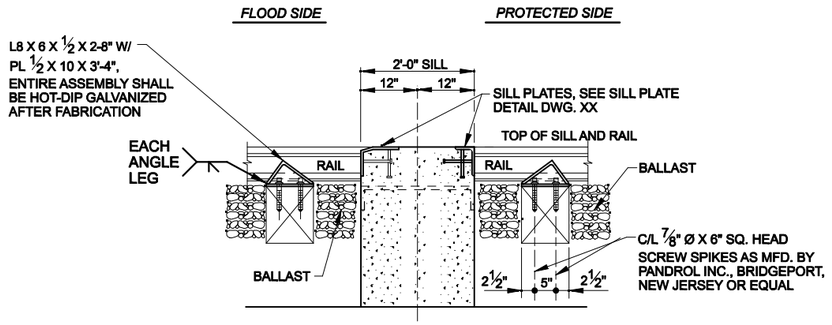

SECTION (D)

SCALE: 1" = 1'- 0"

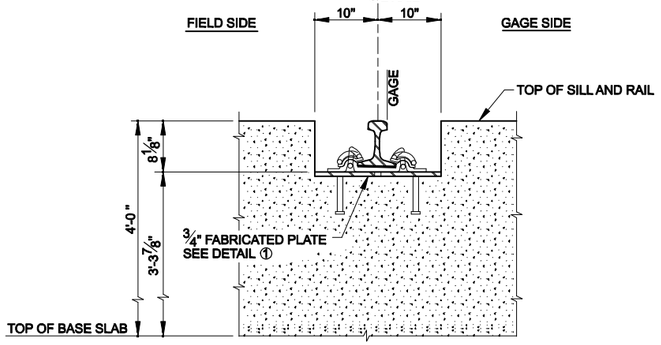

SECTION (A)

SCALE: 1" = 1' - 0"

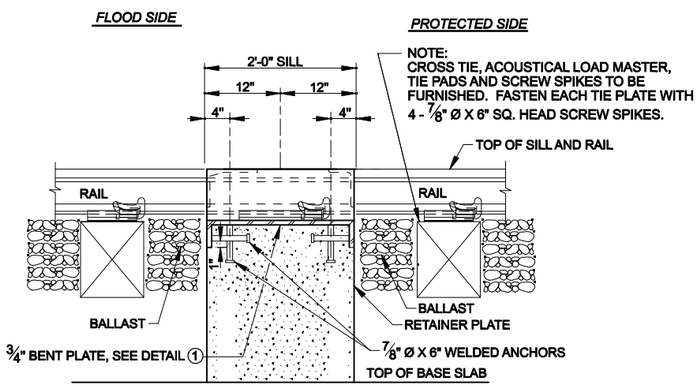

RAIL ASSEMBLY

SCALE: 1" = 1' - 0"

SECTION (C)

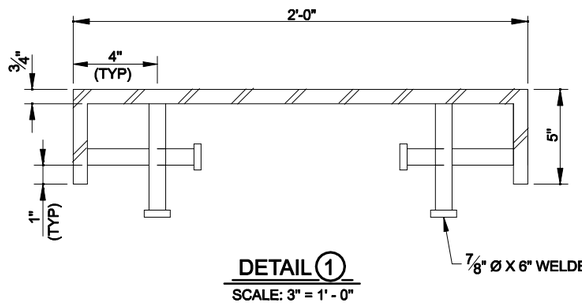

DETAIL (1)

SCALE: 3" = 1' - 0"

SCALE:1/2"=1'
0 1' 2' 4'

SCALE: 1"=1'
0 1' 2'

SCALE: 3"=1'
0 3" 6" 9" 12"

US Army Corps of Engineers
NEW ORLEANS DISTRICT

MARK	DESCRIPTION	DATE	APPR.
MARK	DESCRIPTION	DATE	APPR.

DESIGNED BY: USACE - NEW ORLEANS
DWN BY:
SUBMITTED BY:
DATE: MAY 2008
SOLICITATION NO.:
CONTRACT NO.:
PLOT SCALE: 1" = 1'
PLOT DATE:
SIZE: ANSI D
FILE NUMBER: A/E TYPICALS
FILE NAME: AE-TYP41.DGN

U.S. ARMY CORPS OF ENGINEERS
NEW ORLEANS DISTRICT
NEW ORLEANS, LOUISIANA

USACE - NEW ORLEANS
HURRICANE DESIGN GUIDELINES
A/E TYPICAL DRAWINGS
~
RAILROAD DETAILS
CONCRETE MONOLITH RAIL DETAILS
~

SHEET IDENTIFICATION
X-00

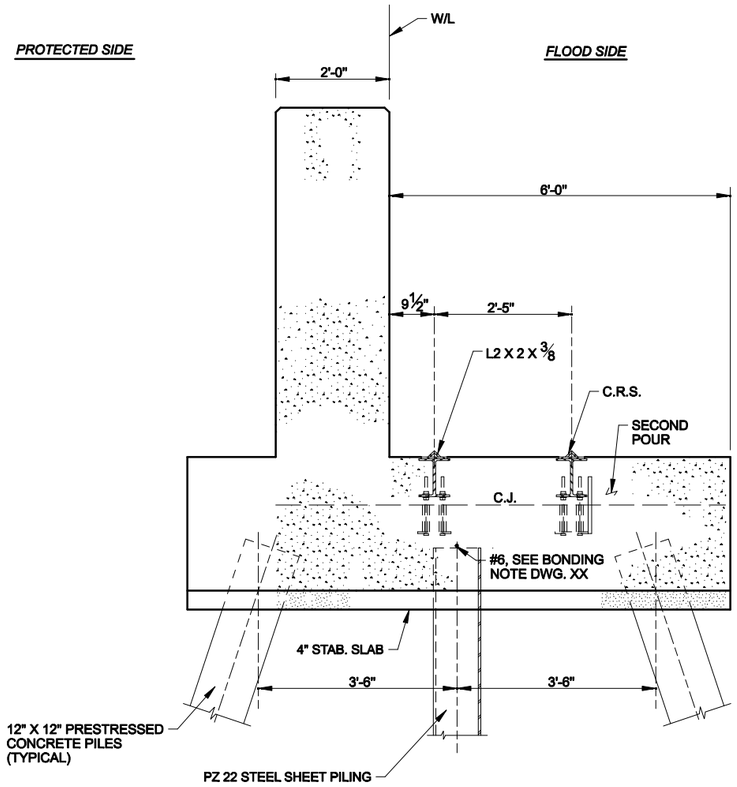

SECTION A
STORAGE MONOLITH
SCALE: 3/4 " = 1'-0"

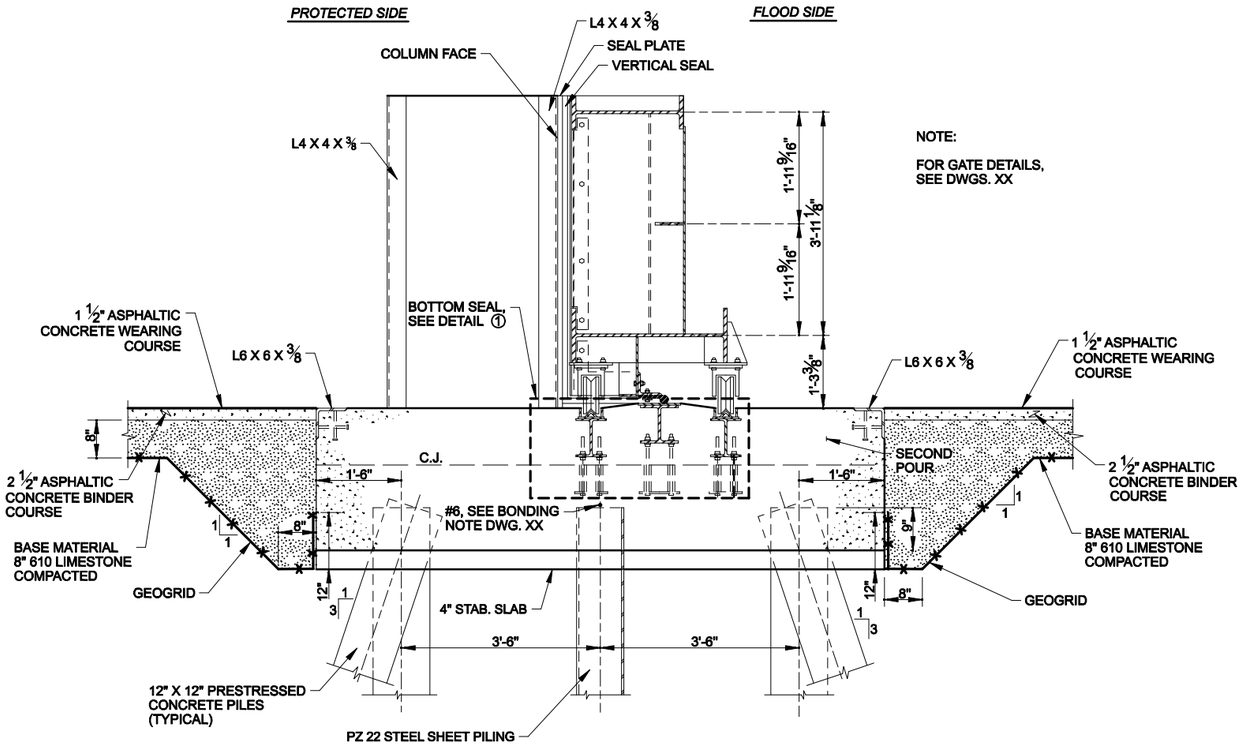

LEGEND

GEOGRID

SECTION B
GATE MONOLITH
SCALE: 3/4 " = 1'-0"

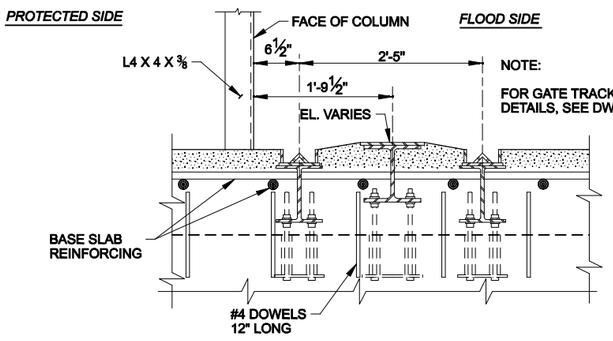

DETAIL 1
SCALE: 1" = 1' - 0"

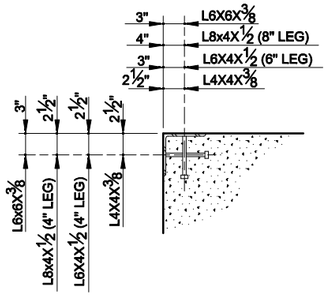

ANGLE DETAIL
N.T.S.

AT COLUMNS:

L4X4X3/8 W/ ½"X6" WELDED ANCHORS, 12" O.C. STAGGERED

L6X4X½ W/ ½"X6" WELDED ANCHORS, 12" O.C. STAGGERED

L8X4X½ W/ ½"X6" WELDED ANCHORS, 12" O.C. STAGGERED

AT TOP OF SILL:

L6X6X3/8 W/ ½"X6" WELDED ANCHORS, 12" O.C. STAGGERED

NOTE:

ENTIRE ANGLE ASSEMBLY TO BE HOT-DIP GALVANIZED AFTER FABRICATION.

SCALE:3/4"=1'
0 1' 2' 3'

SCALE: 1"=1'
0 1' 2'

US Army Corps of Engineers
NEW ORLEANS DISTRICT

MARK	DESCRIPTION	DATE	APPR.
MARK	DESCRIPTION	DATE	APPR.

DESIGNED BY: USACE - NEW ORLEANS
DRWN BY: CKD BY:
SUBMITTED BY:
DATE: MAY 2008
SOLICITATION NO.:
CONTRACT NO.:
PLOT SCALE: 1=1' PLOT DATE:
SIZE: ANSI D
FILE NAME: AE-TYP02.DGN
FILE NUMBER: A/E TYPICALS

U.S. ARMY CORPS OF ENGINEERS
NEW ORLEANS DISTRICT
NEW ORLEANS, LOUISIANA

USACE - NEW ORLEANS
HURRICANE DESIGN GUIDELINES
A/E TYPICAL DRAWINGS
-
ROLLER GATES
MASONRY
~

SHEET IDENTIFICATION
X-00

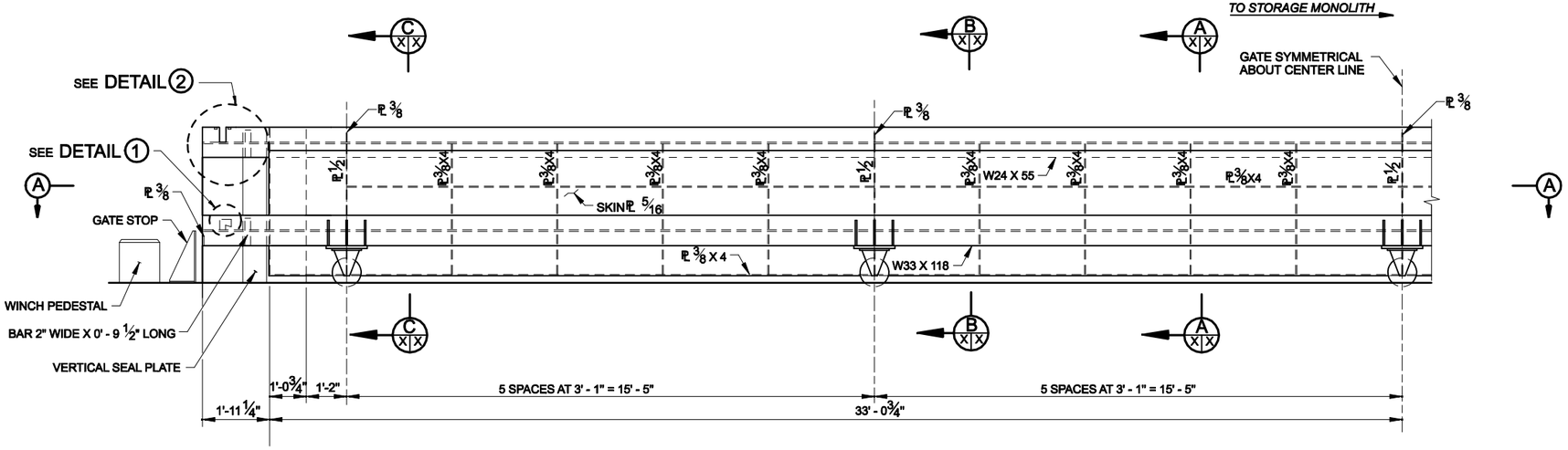

FLOOD SIDE ELEVATION

SCALE: 1/2" = 1' - 0"

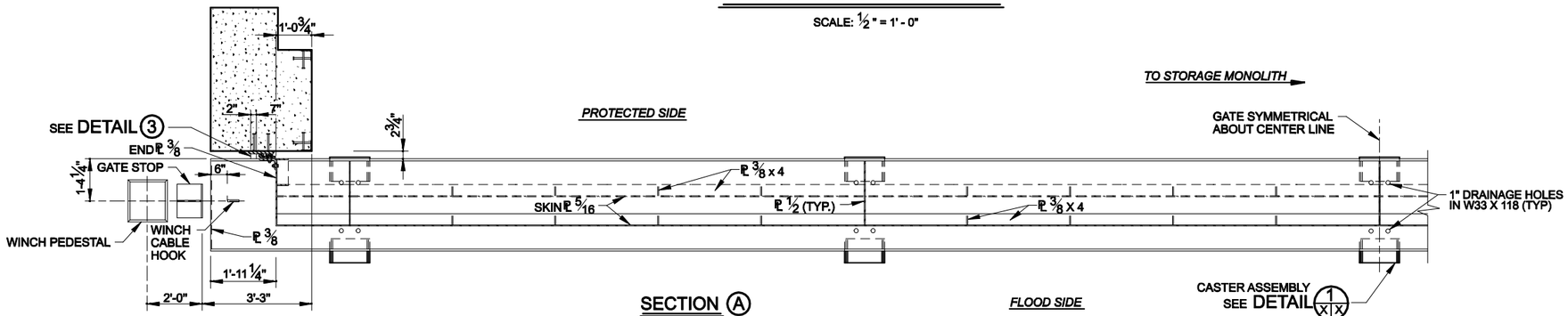

SECTION A

SCALE: 1/2" = 1' - 0"

NOTE:

FOR WINCH PEDESTAL AND GATE STOP DETAILS, SEE DWG. 14

NOTE:

NO SPLICING OF THE W33 X 118 OR W24 X 55 BEAMS SHALL BE ALLOWED.

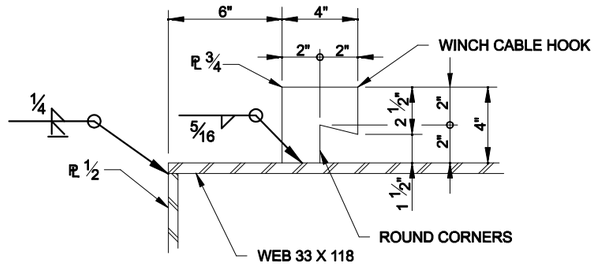

WINCH CABLE HOOK DETAIL 1

SCALE: 3" = 1' - 0"

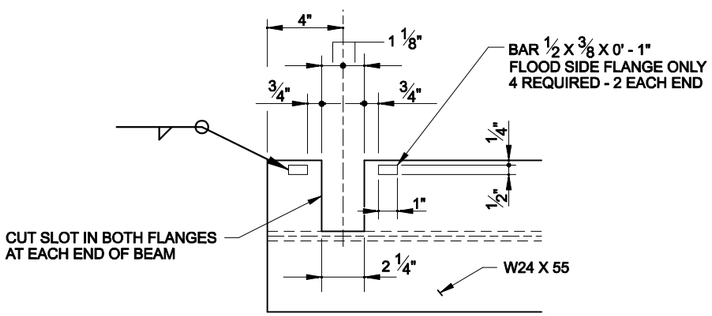

DETAIL 2

SCALE: 3" = 1' - 0"

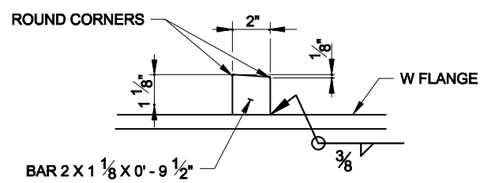

DETAIL 3

SCALE: 3" = 1' - 0"

SCALE: 1/2"=1'

0 1' 2' 4'

SCALE: 3"=1'

0 3" 6" 9" 12"

REFERENCE DRAWINGS

FOR BOTTOM ROLLER GATE SECTIONS, SEE DWG. XX
FOR BOTTOM ROLLER GATE SEAL SUPPORT DETAILS, SEE DWG. XX
FOR BOTTOM ROLLER GATE SEAL DETAILS, SEE DWG. XX
FOR CASTER ASSEMBLY AND DETAILS, SEE DWG. XX

US Army Corps of Engineers
NEW ORLEANS DISTRICT

MARK	DESCRIPTION	DATE	APPR.
MARK	DESCRIPTION	DATE	APPR.

DESIGNED BY: USACE - NEW ORLEANS
DWN BY:
SUBMITTED BY:
DATE: MAY 2008
CKD BY:
SOLICITATION NO.:
CONTRACT NO.:
PLOT SCALE: 3/4" = 1"
SIZE: ANSI D
PLOT DATE:
FILE NUMBER: A/E TYPICALS
FILE NAME: AE-TYP01.DGN

U.S. ARMY CORPS OF ENGINEERS
NEW ORLEANS DISTRICT
NEW ORLEANS, LOUISIANA

USACE - NEW ORLEANS
HURRICANE DESIGN GUIDELINES
A/E TYPICAL DRAWINGS

ROLLER GATES
ROLLER GATE ELEVATION

SHEET IDENTIFICATION
X-00

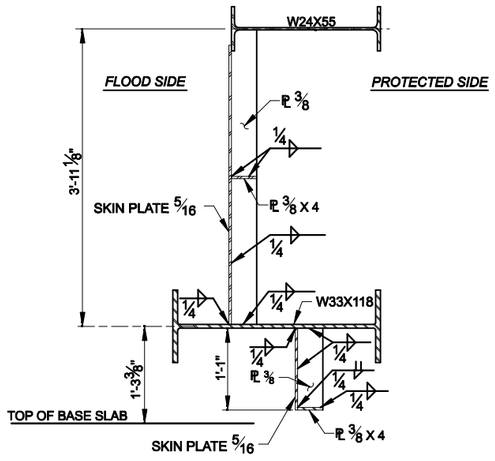

SECTION (A/XX)

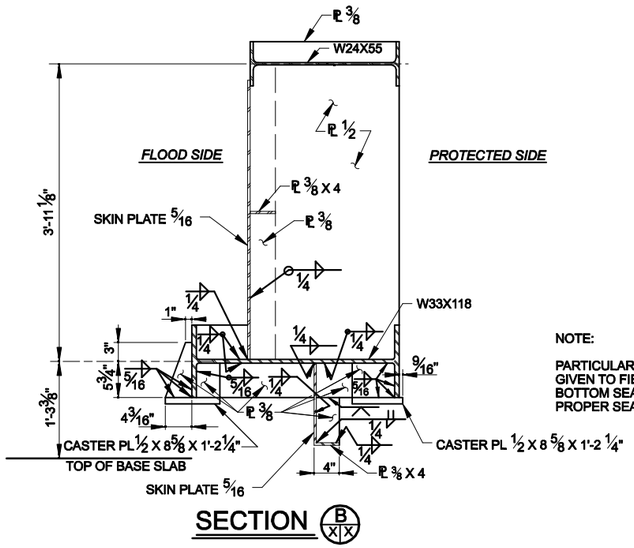

SECTION (B/XX)

4, 5/8" Ø X 2 1/4" HEX HEAD BOLT W/CASTER BOLT WASHER AND HEX NUT, C.R.S., EACH CASTER ASSEMBLY. SEE C.R.S. CASTER BOLT WASHER DETAIL ON DWG. XX

NOTE:

PARTICULAR ATTENTION SHALL BE GIVEN TO FIELD ADJUSTMENT OF BOTTOM SEAL IN ORDER TO OBTAIN PROPER SEAL WITH SEAL PLATE.

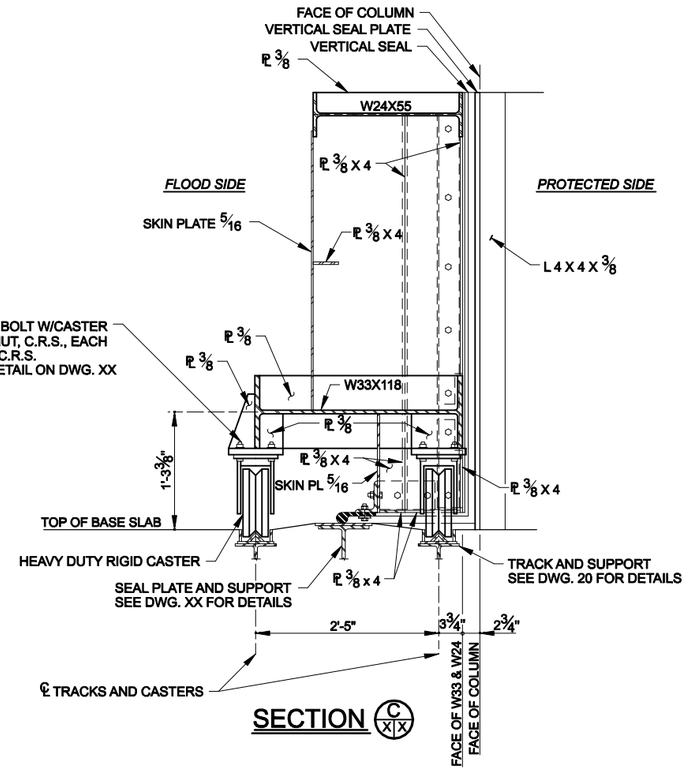

SECTION (C/XX)

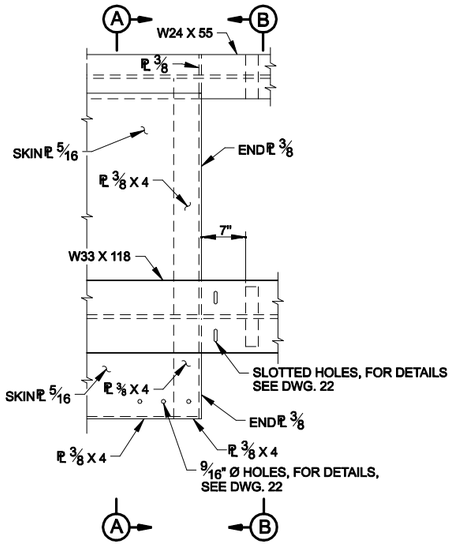

OTHER END-OPPOSITE HAND

FLOOD SIDE ELEVATION AT END OF GATE

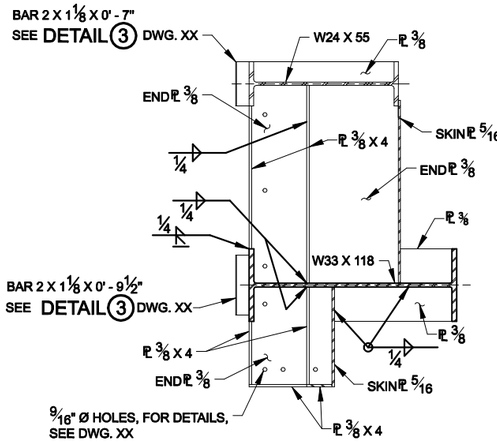

SECTION (A)

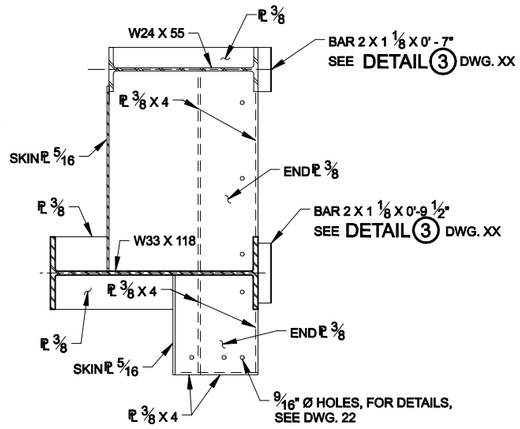

SECTION (B)

REFERENCE DRAWINGS

FOR BOTTOM ROLLER GATE SEAL DETAILS, SEE DWG. XX.
FOR CASTER ASSEMBLY AND DETAILS, SEE DWG. XX.

SCALE: 1"=1'

0 1' 2'

US Army Corps of Engineers
NEW ORLEANS DISTRICT

MARK	DESCRIPTION	DATE	APPR.
MARK	DESCRIPTION	DATE	APPR.

DESIGNED BY: USACE - NEW ORLEANS
DWN BY:
CKD BY:
SUBMITTED BY:
DATE: MAY 2008
SOLICITATION NO.:
CONTRACT NO.:
FILE NUMBER: A/E TYPICALS
PLOT SCALE: 1" = 1"
PLOT DATE:
SIZE: ANSI D
FILE NAME: AE-TYPICLDGN

U.S. ARMY CORPS OF ENGINEERS
NEW ORLEANS DISTRICT
NEW ORLEANS, LOUISIANA

USACE - NEW ORLEANS
HURRICANE DESIGN GUIDELINES
A/E TYPICAL DRAWINGS
-
ROLLER GATES
ROLLER GATE DETAILS
-

SHEET IDENTIFICATION
X-00

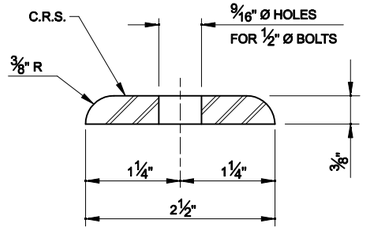

SEAL DEFLECTION BAR

SCALE: 1" = 1' - 0"

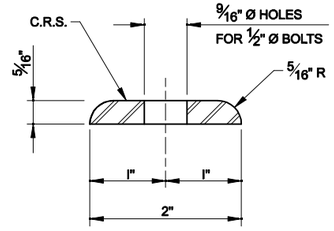

SEAL RETAINING BAR

SCALE: 1" = 1' - 0"

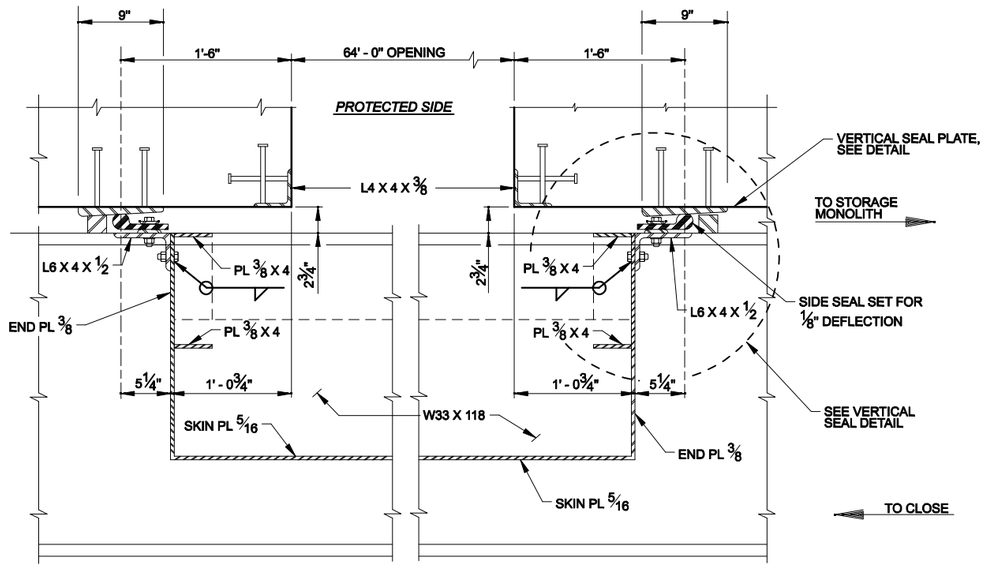

SECTION THRU ROLLER GATE

SCALE: 1 1/2" = 1' - 0"

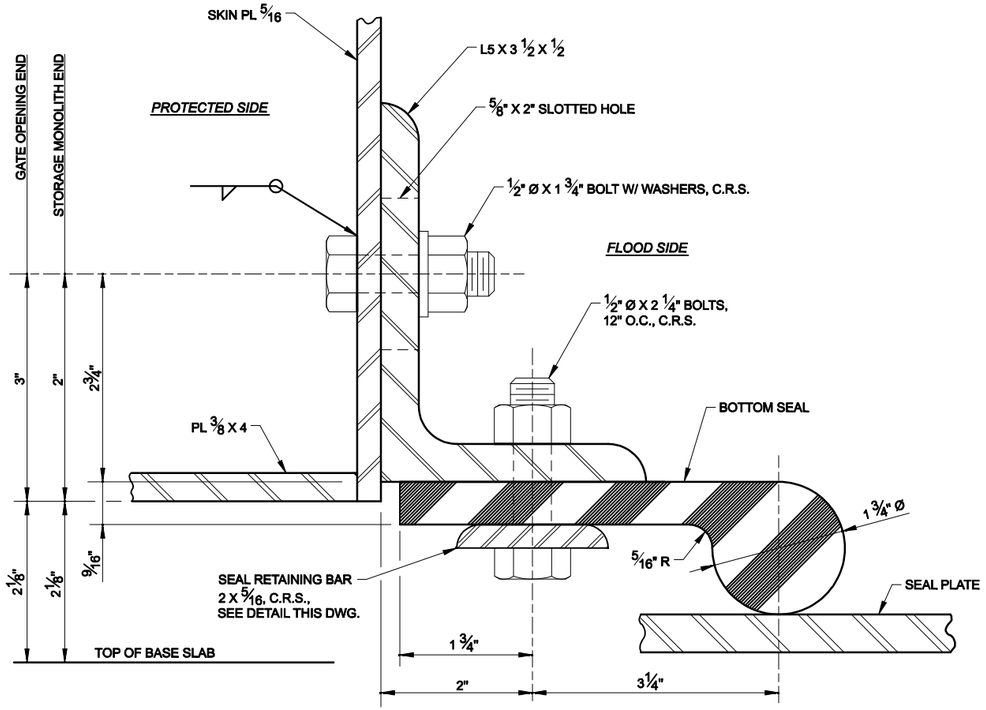

TYPICAL SECTION THRU BOTTOM SEAL

SCALE: 1" = 1' - 0"

NOTE:

SET SEAL FOR 0" DEFLECTION. PARTICULAR ATTENTION SHALL BE GIVEN TO FIELD ADJUSTMENT OF BOTTOM SEAL IN ORDER TO OBTAIN A PERFECT SEAL WITH SEAL PLATE.

SCALE:1-1/2"=1'

0 6" 1' 2'

SCALE:1"=1"

0 1" 2"

US Army Corps of Engineers
NEW ORLEANS DISTRICT

MARK	DESCRIPTION	DATE	APPR.

MARK	DESCRIPTION	DATE	APPR.

U.S. ARMY CORPS OF ENGINEERS
NEW ORLEANS DISTRICT
NEW ORLEANS, LOUISIANA

DESIGNED BY: USACE - NEW ORLEANS
DWN BY:
CKD BY:
SUBMITTED BY:
DATE: MAY 2008
SOLICITATION NO.:
CONTRACT NO.:
PLOT SCALE: 1" = 1"
PLOT DATE:
FILE NUMBER: A/E TYPICALS
SIZE: ANSI D
FILE NAME: AE-TYPRLDGN

USACE - NEW ORLEANS
HURRICANE DESIGN GUIDELINES
A/E TYPICAL DRAWINGS
-
ROLLER GATES
SEAL DETAILS
(1 OF 2)

SHEET IDENTIFICATION
X-00

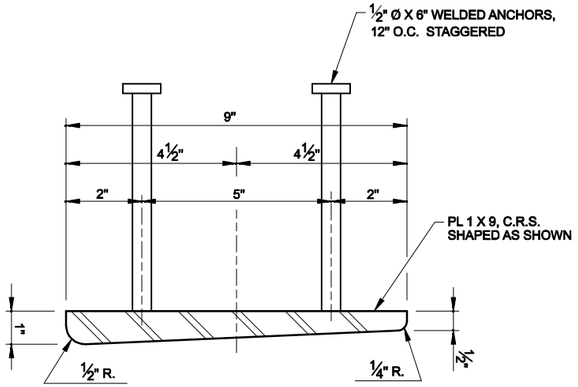

VERTICAL SEAL PLATE DETAIL

SCALE: 6" = 1' - 0"

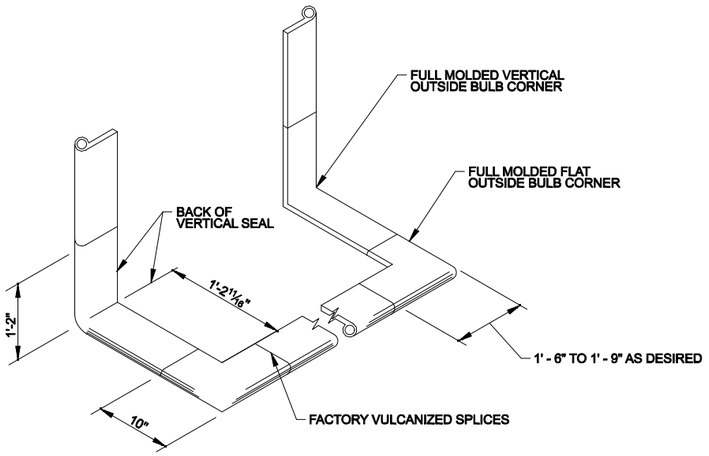

TYPICAL GATE SEAL

NOT TO SCALE

REFERENCE DRAWINGS

FOR BOTTOM ROLLER GATE SEAL SUPPORT DETAILS, SEE DWG. XX

NOTE:

1. ALL INDIVIDUAL 90° CORNER INTERSECTIONS WILL BE FULLY MOLDED.
2. ALL SPLICES WILL BE FACTORY MADE IN HEAVY STEEL PRESS TYPE MOLDS UNDER PRESSURE AND HEAT.
3. ALL SPLICE JOINTS MUST DEVELOP A STRENGTH OF AT LEAST 50% OF THE MINIMUM TENSILE STRENGTH REQUIRED OF THE RUBBER.

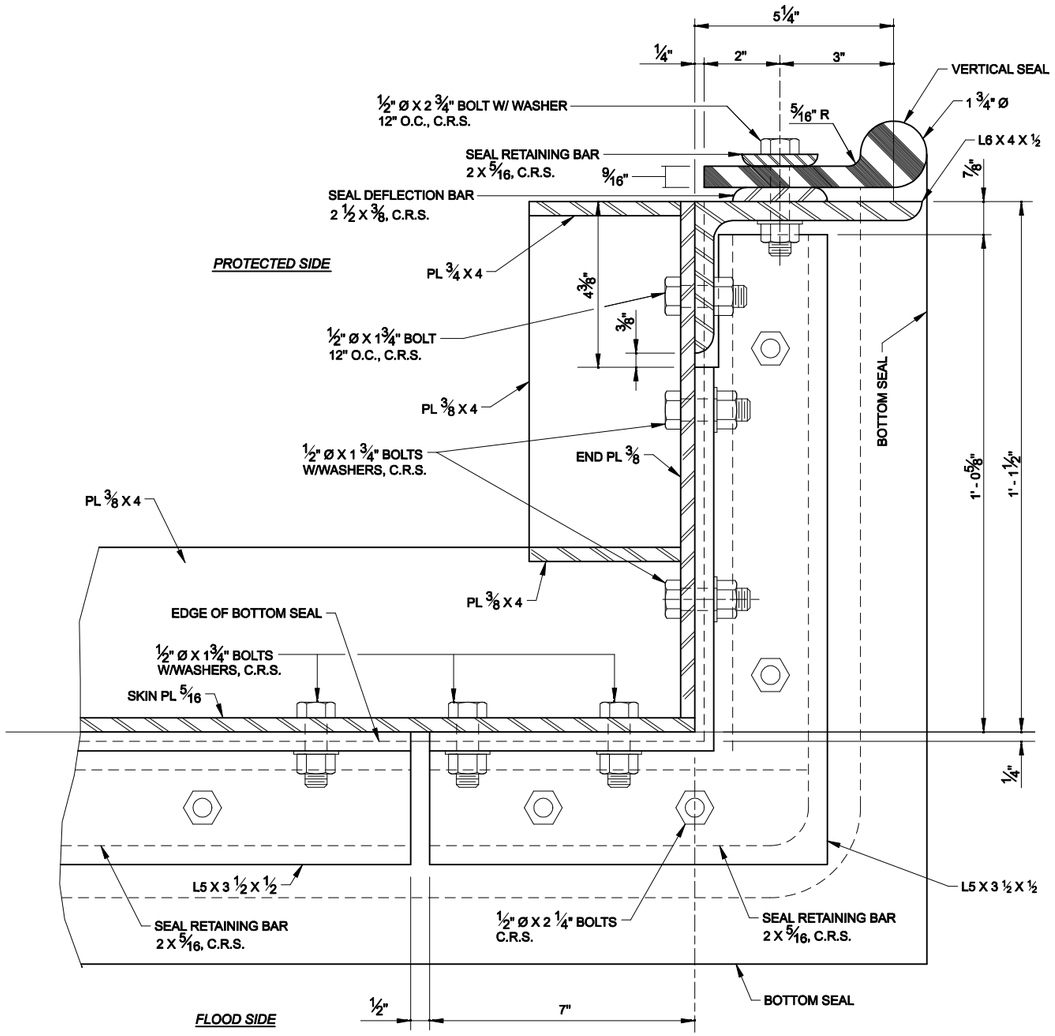

VERTICAL SEAL

PLAN AT END OF GATE BELOW W33X118

SCALE: 6" = 1' - 0"

SCALE: 6"=1'

0 3" 6" 9" 12"

US Army Corps of Engineers®
NEW ORLEANS DISTRICT

MARK	DESCRIPTION	DATE	APPR.

MARK	DESCRIPTION	DATE	APPR.

U.S. ARMY CORPS OF ENGINEERS
NEW ORLEANS DISTRICT
NEW ORLEANS, LOUISIANA

DESIGNED BY: USACE - NEW ORLEANS
DWN BY:
SUBMITTED BY:
CKD BY:
PLOT SCALE:
PLOT DATE:
SIZE: ANSI D
FILE NAME: AE-TYPRLDGN
DATE: MAY 2008
SOLICITATION NO.:
CONTRACT NO.:
FILE NUMBER: AE-TYPICALS

USACE - NEW ORLEANS
HURRICANE DESIGN GUIDELINES
A/E TYPICAL DRAWINGS
-
ROLLER GATES
SEAL DETAILS
(2 OF 2)

SHEET IDENTIFICATION
X-00

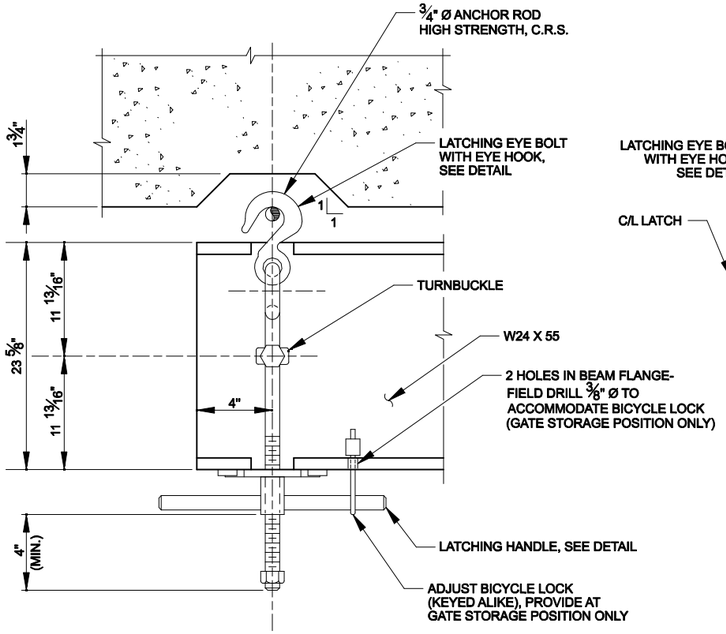

PLAN
SCALE: 3" = 1' - 0"

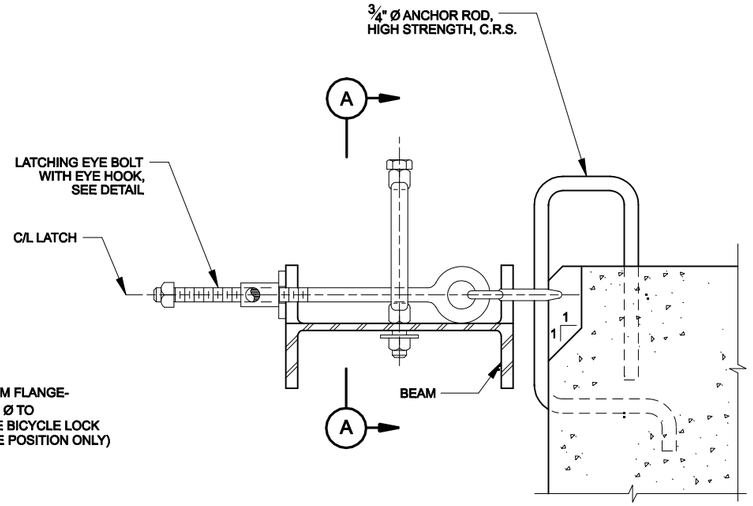

SECTION AT C/L OF LATCHING DEVICE

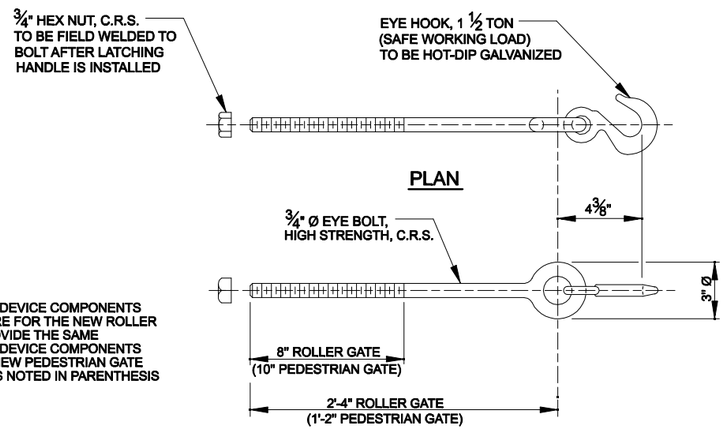

NOTE:

LATCHING DEVICE COMPONENTS SHOWN ARE FOR THE NEW ROLLER GATE, PROVIDE THE SAME LATCHING DEVICE COMPONENTS FOR THE NEW PEDESTRIAN GATE EXCEPT AS NOTED IN PARENTHESIS

ELEVATION

LATCHING EYE BOLT W/ EYE HOOK

SCALE: 3" = 1' - 0"

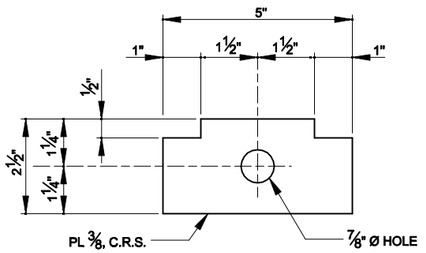

PLATE WASHER

SCALE: ½" = 1' - 0"

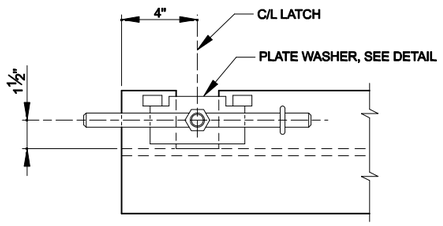

ELEVATION

DETAIL (1)

LATCHING DEVICE

SCALE: 3" = 1' - 0"

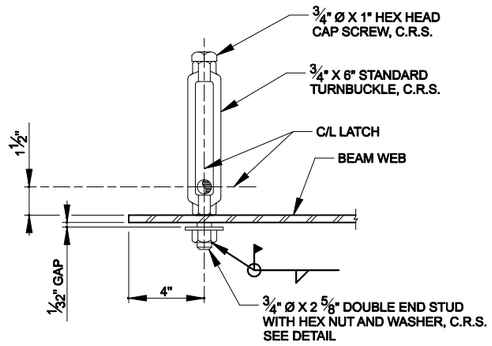

SECTION (A)

SCALE:1/2"=1'

0 1' 2' 4'

SCALE: 3"=1'

0 3" 6" 9" 12"

US Army Corps of Engineers®
NEW ORLEANS DISTRICT

MARK	DESCRIPTION	DATE	APPR.
MARK	DESCRIPTION	DATE	APPR.

DESIGNED BY: USACE - NEW ORLEANS
DRWN BY:
CKD BY:
SUBMITTED BY:
DATE: MAY 2008
SOLICITATION NO.:
CONTRACT NO.:
PLOT SCALE: 1" = 1'
PLOT DATE:
FILE NUMBER: A/E TYPICALS
SIZE: ANSI D
FILE NAME: AE-TYP54.DGN

U.S. ARMY CORPS OF ENGINEERS
NEW ORLEANS DISTRICT
NEW ORLEANS, LOUISIANA

USACE - NEW ORLEANS
HURRICANE DESIGN GUIDELINES
A/E TYPICAL DRAWINGS
-
ROLLER GATES
LATCHING DETAILS
(1 OF 2)

SHEET IDENTIFICATION
X-00

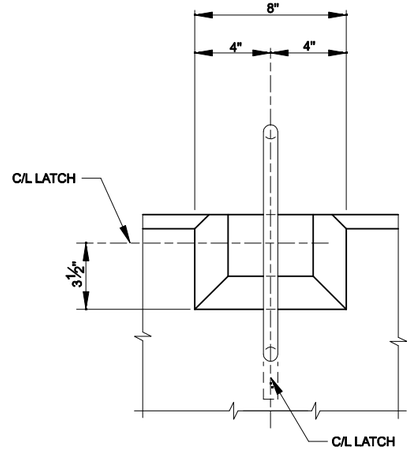

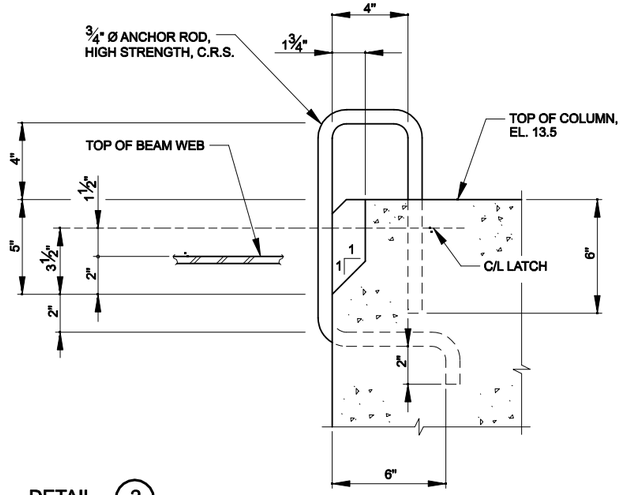

DETAIL (2)

SCALE: 3" = 1' - 0"

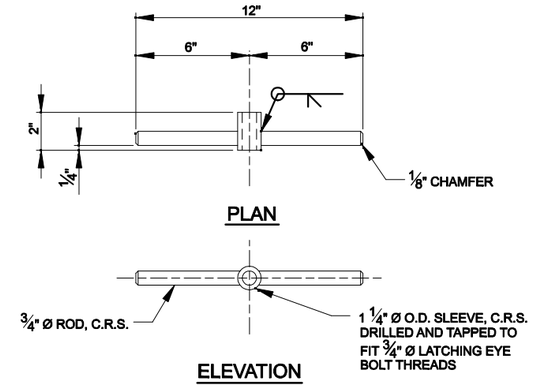

LATCHING HANDLE

SCALE: ¼ " = 1' - 0"

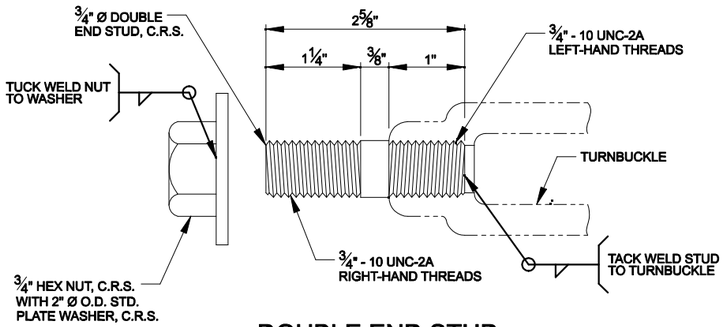

DOUBLE END STUD

SCALE: 1" = 1' - 0"

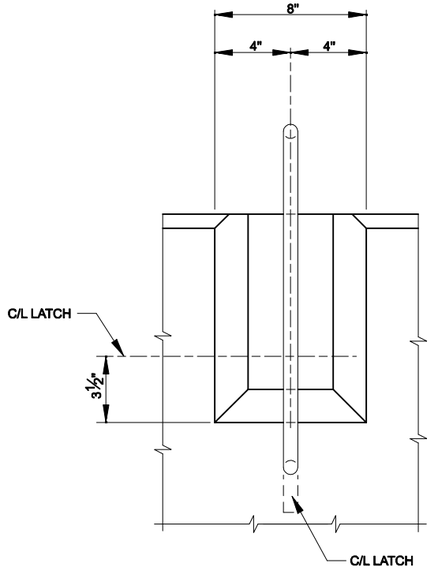

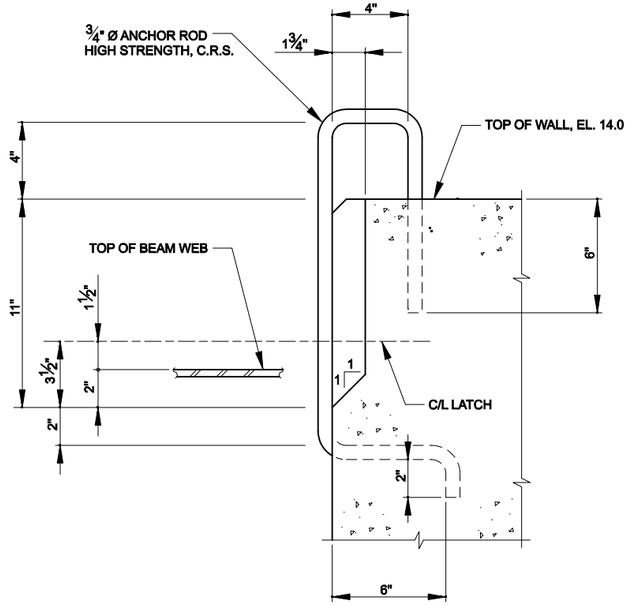

DETAIL (3)

SCALE: 3" = 1' - 0"

SCALE:1/4"=1'
0 2' 4' 8'

SCALE: 3"=1'
0 3" 6" 9" 12"

SCALE:1"=1"
0 1" 2"

US Army Corps of Engineers®
NEW ORLEANS DISTRICT

MARK	DESCRIPTION	DATE	APPR.
MARK	DESCRIPTION	DATE	APPR.

DESIGNED BY: USACE - NEW ORLEANS
DWN BY:
CKD BY:
SUBMITTED BY:
DATE: MAY 2008
SOLICITATION NO.:
CONTRACT NO.:
PLOT SCALE: 1
PLOT DATE:
SIZE: ANSI D
FILE NUMBER: A/E TYPICALS
FILE NAME: AE-TYPXLDGN

U.S. ARMY CORPS OF ENGINEERS
NEW ORLEANS DISTRICT
NEW ORLEANS, LOUISIANA

USACE - NEW ORLEANS
HURRICANE DESIGN GUIDELINES
A/E TYPICAL DRAWINGS
-
ROLLER GATES
LATCHING DETAILS
(2 OF 2)

SHEET IDENTIFICATION
X-00

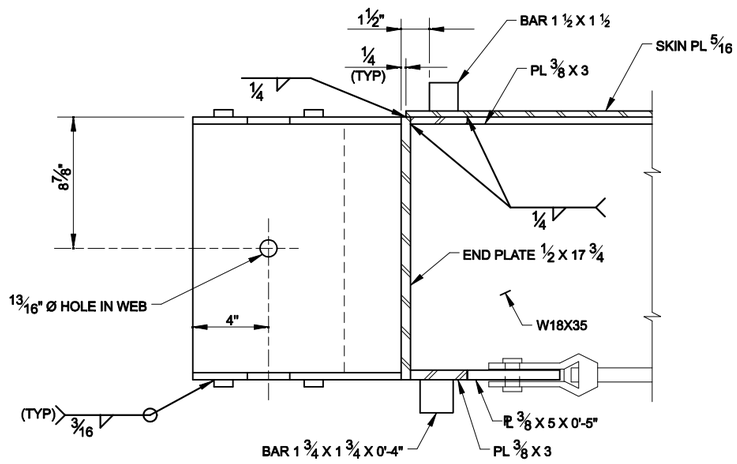

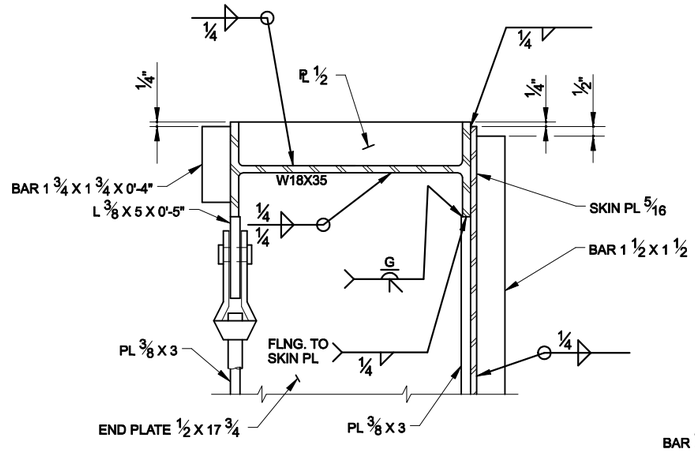

SECTION (A)

NOTE:
WELDS SHOWN ARE TYPICAL FOR SIMILAR JOINTS.

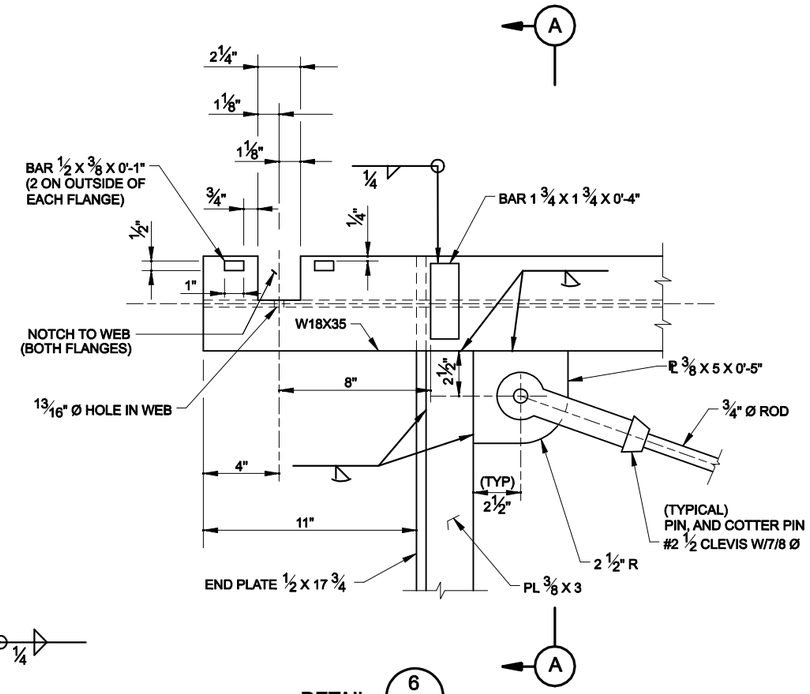

DETAIL 6 (13 | 15)

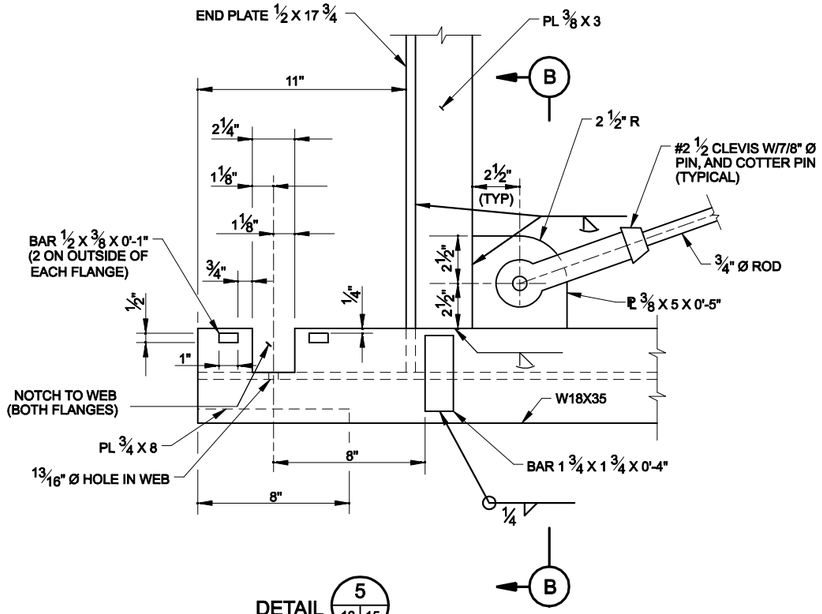

DETAIL 5 (13 | 15)

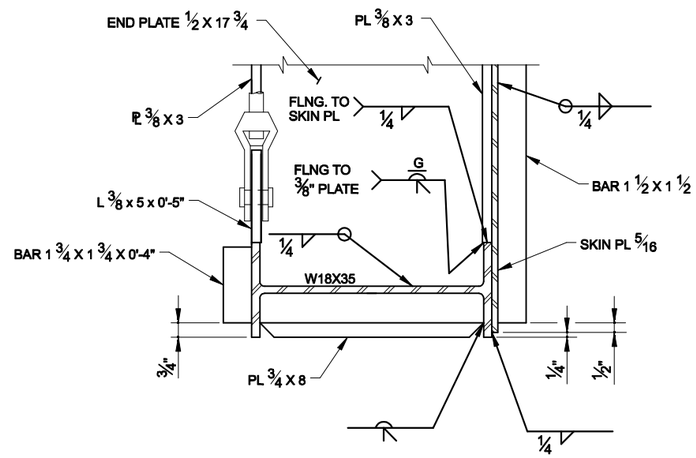

SECTION (B)

SCALE: 3"=1'
0 3" 6" 9" 12"

US Army Corps of Engineers®
NEW ORLEANS DISTRICT

MARK	DESCRIPTION	DATE	APPR.
MARK	DESCRIPTION	DATE	APPR.

DESIGNED BY: USACE - NEW ORLEANS	DWN BY:	SUBMITTED BY:	PLOT SCALE: 1" = 1'
CKD BY:			PLOT DATE:
DATE: MAY 2008	SOLICITATION NO.:	CONTRACT NO.:	FILE NUMBER: A/E TYPICALS
SIZE: ANSI D	FILE NAME: AE-TYP05.DGN		

U.S. ARMY CORPS OF ENGINEERS
NEW ORLEANS DISTRICT
NEW ORLEANS, LOUISIANA

USACE - NEW ORLEANS
HURRICANE DESIGN GUIDELINES
A/E TYPICAL DRAWINGS
-
ROLLER GATES
CORNER DETAILS
-

SHEET IDENTIFICATION
X-00

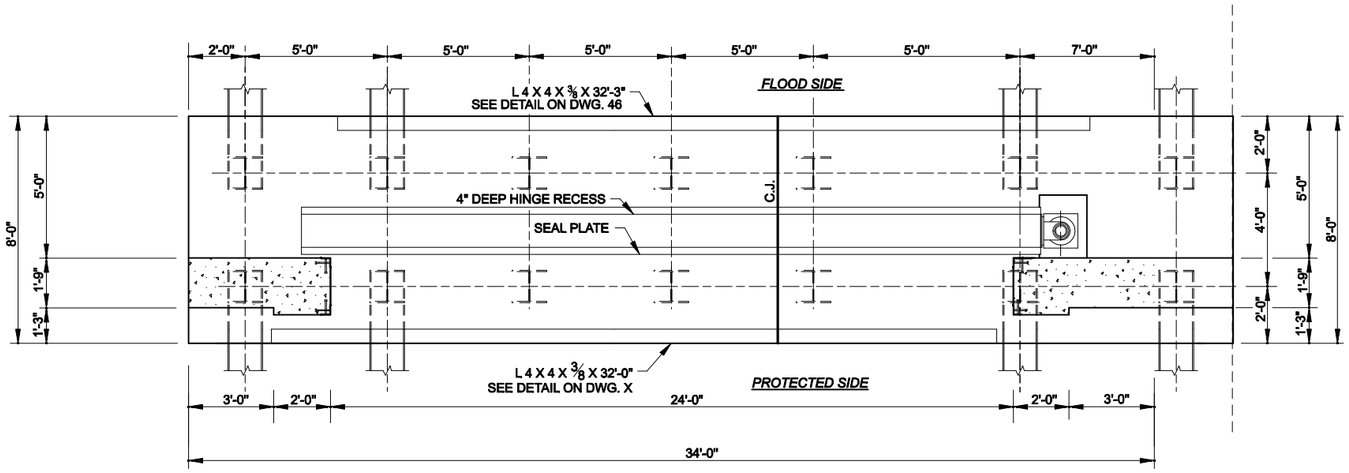

PLAN AT ELEVATION 12.0

SCALE: ½" = 1'- 0"

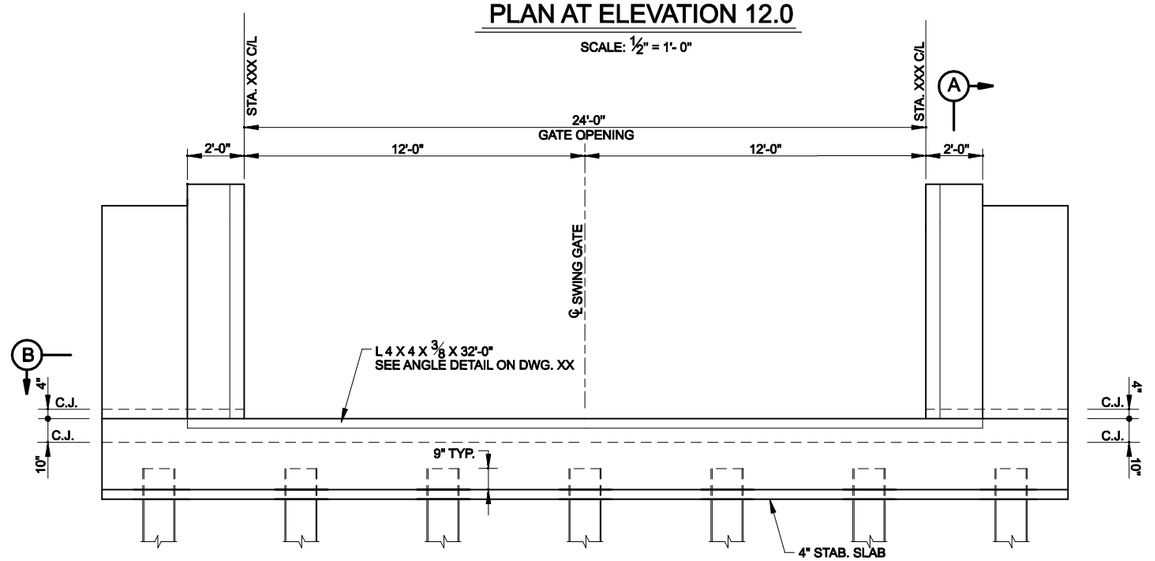

PROTECTED SIDE ELEVATION

SCALE: ½" = 1'- 0"

NOTE:

#4 DOWELS NOT SHOWN FOR CLARITY.

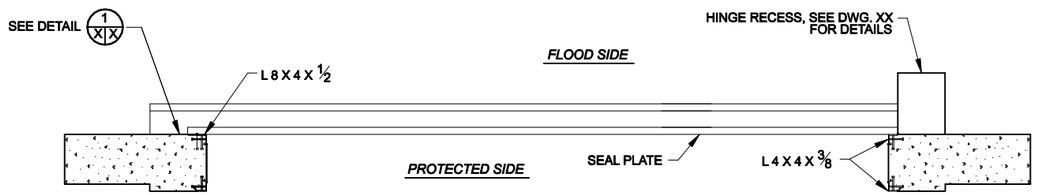

SECTION (B)

SCALE: ½" = 1'- 0"

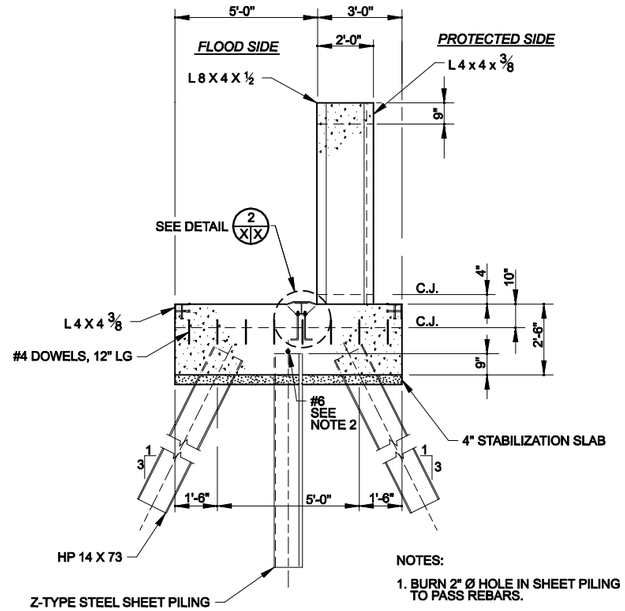

SECTION (A)

SCALE: ½" = 1'- 0"

NOTES:

1. BURN 2" Ø HOLE IN SHEET PILING TO PASS REBARS.
2. SEE BONDING NOTE ON DWG. X REGARDING THE #6 BAR ON TOP OF THE STEEL SHEET PILING.

PILE LEGEND

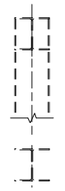

BATTER PILE
ALL PILES 3V ON 1H

VERTICAL PILE

SCALE: 3/8" = 1'

0 1' 3' 6'

US Army Corps of Engineers®
NEW ORLEANS DISTRICT

MARK	DESCRIPTION	DATE	APPR.

MARK	DESCRIPTION	DATE	APPR.

DESIGNED BY: USACE - NEW ORLEANS
DWN BY:
SUBMITTED BY:
CHKD BY:
PLOT SCALE: 1" = 1'
PLOT DATE:
SIZE: ANSI D
DATE: MAY 2008
SOLICITATION NO.:
CONTRACT NO.:
FILE NUMBER: A/E TYPICALS
FILE NAME: AE-TYPWLDGN

U.S. ARMY CORPS OF ENGINEERS
NEW ORLEANS DISTRICT
NEW ORLEANS, LOUISIANA

USACE - NEW ORLEANS
HURRICANE DESIGN GUIDELINES
A/E TYPICAL DRAWINGS
-
SWING GATES
MASONRY
-

SHEET IDENTIFICATION
X-00

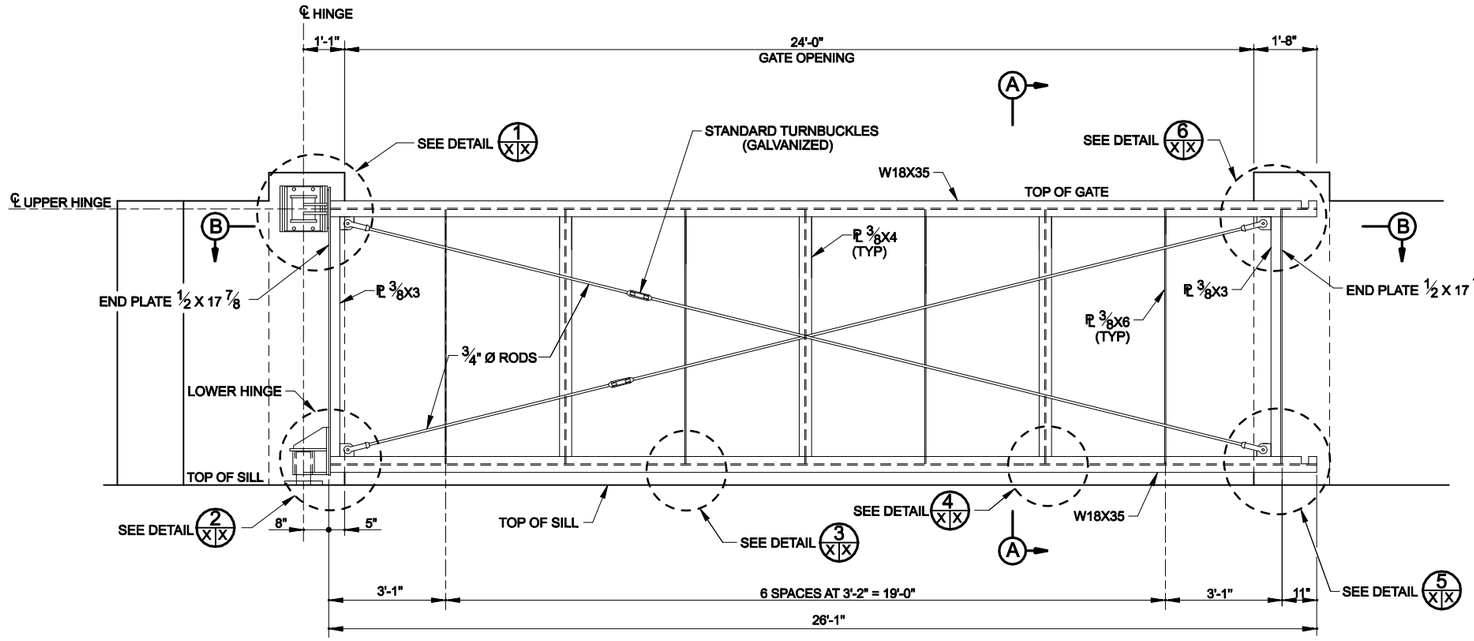

FLOOD SIDE ELEVATION

SCALE: ¾" = 1'- 0"

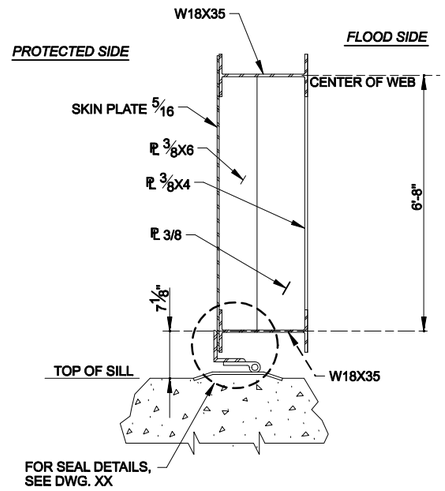

SECTION (A)

NTS

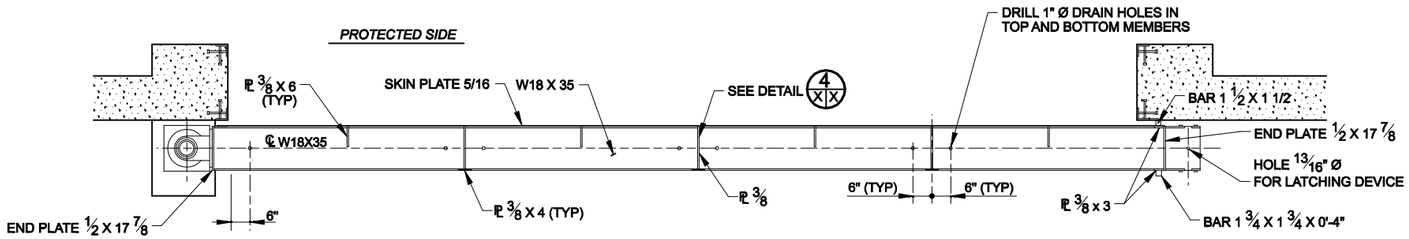

SECTION (B)

SCALE: ¾" = 1'- 0"

SCALE:1/2"=1'

0 1' 2' 4'

US Army Corps of Engineers®
NEW ORLEANS DISTRICT

MARK	DESCRIPTION	DATE	APPR.
MARK	DESCRIPTION	DATE	APPR.

DESIGNED BY: USACE - NEW ORLEANS
DWN BY:
CKD BY:
SUBMITTED BY:
DATE: MAY 2008
SOLICITATION NO.:
CONTRACT NO.:
PLOT SCALE: 1/2" = 1'-0"
PLOT DATE:
FILE NUMBER: A/E-TYPICALS
SIZE: ANSI D
FILE NAME: AE-TYP01.DGN

U.S. ARMY CORPS OF ENGINEERS
NEW ORLEANS DISTRICT
NEW ORLEANS, LOUISIANA

USACE - NEW ORLEANS
HURRICANE DESIGN GUIDELINES
A/E TYPICAL DRAWINGS
-
SWING GATES
SWING GATE ELEVATION
-

SHEET IDENTIFICATION
X-00

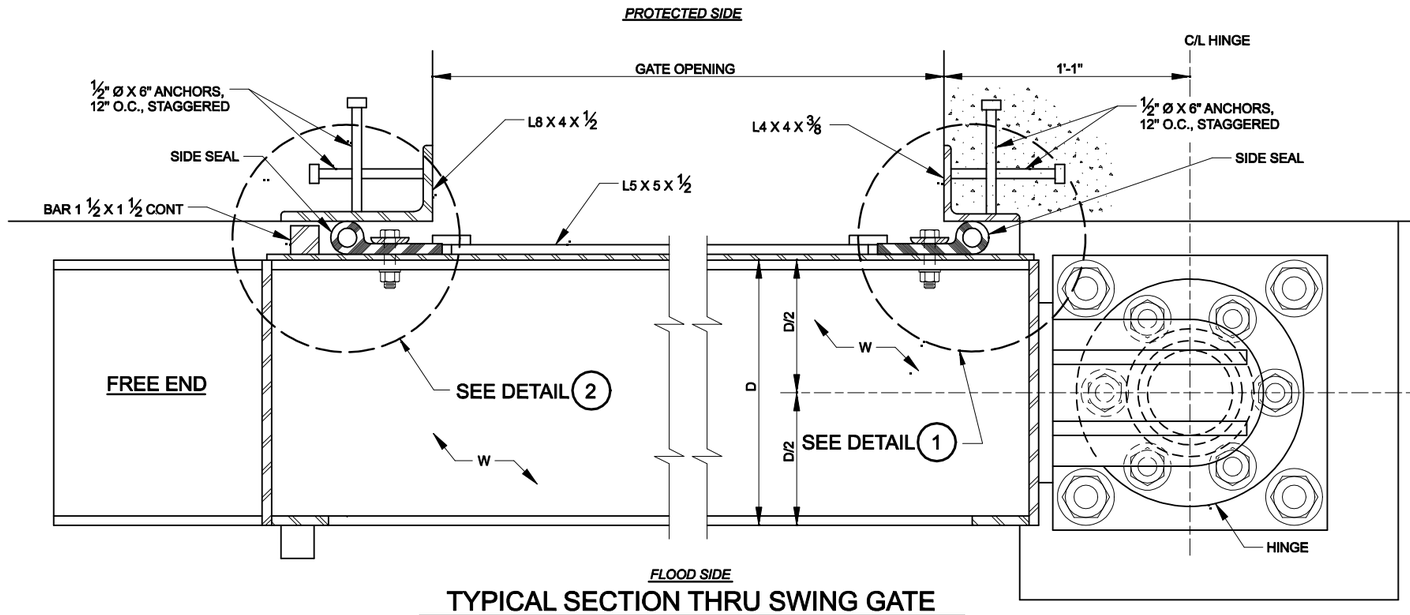

TYPICAL SECTION THRU SWING GATE

SCALE: 3" = 1' - 0"

SCHEDULE		
GATE	DIMENSIONS	
	"A"	"B"

HINGE END

FORMULA:
ADD
1⅝" (SEAL SET FOR ⅛" COMPRESSION)
SKIN PL THICKNESS
D/2 (HALF OF BEAM DEPTH)
———————
= DIMENSION "A"

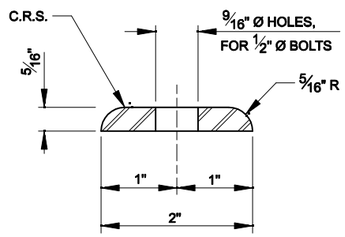

SEAL RETAINING BAR

SCALE: 1" = 1' - 0"

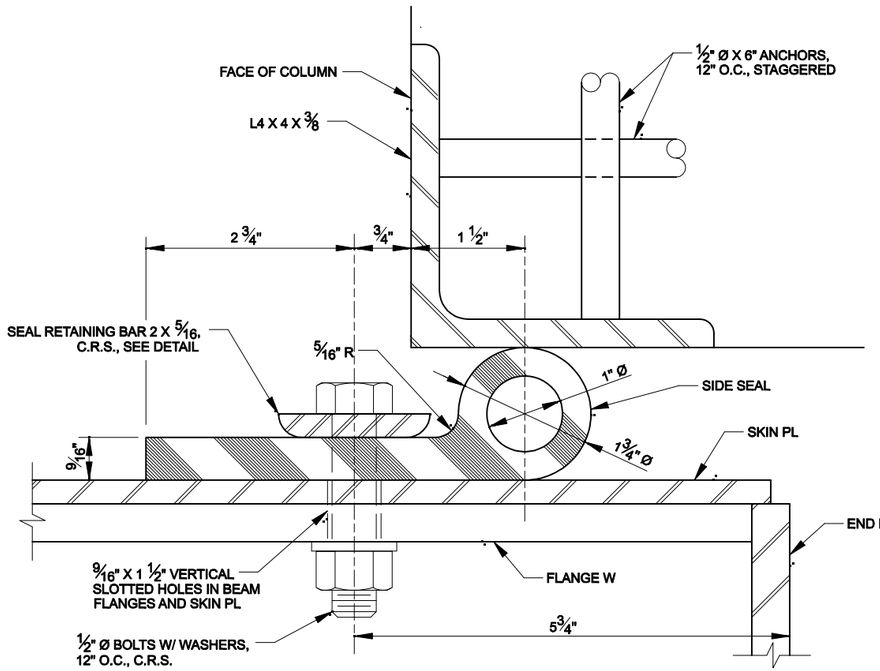

DETAIL 1

SCALE: 1" = 1' - 0"

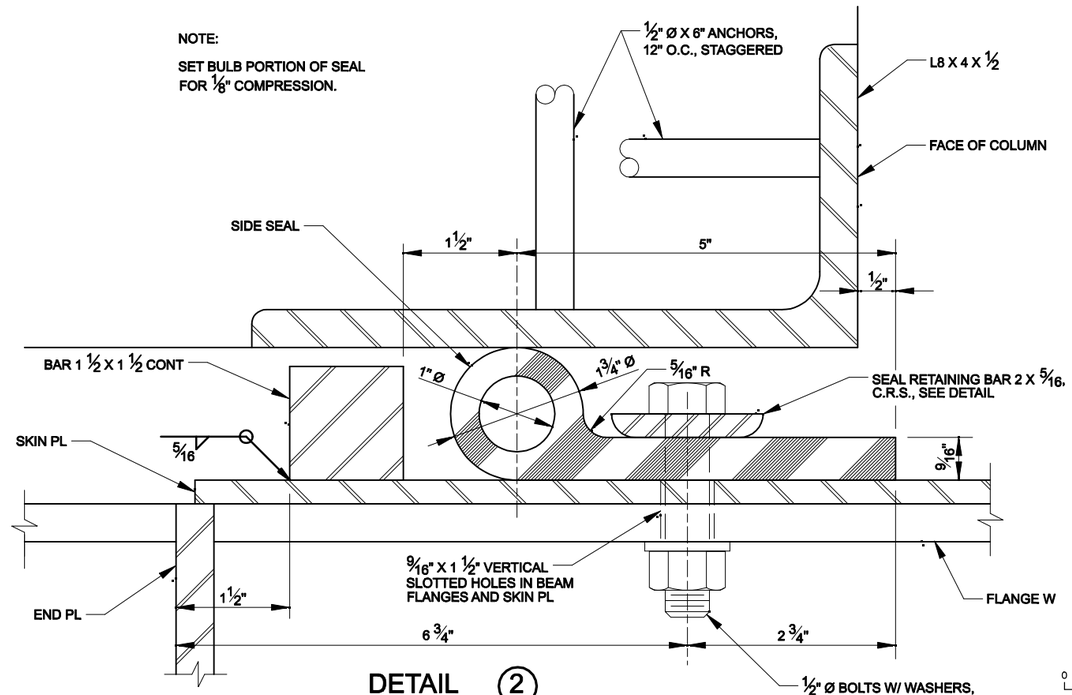

DETAIL 2

SCALE: 1" = 1' - 0"

SCALE: 3"=1'
0 3" 6" 9" 12"

SCALE:1"=1"
0 1" 2"

US Army Corps of Engineers®
NEW ORLEANS DISTRICT

MARK	DESCRIPTION	DATE	APPR.

MARK	DESCRIPTION	DATE	APPR.

DESIGNED BY: USACE - NEW ORLEANS
DWN BY:
SUBMITTED BY:
CKD BY:
DATE: MAY 2008
SOLICITATION NO.:
CONTRACT NO.:
PLOT SCALE: 1/2" = 1"
PLOT DATE:
SIZE: ANSI D
FILE NAME: AE-TYPSECDGN
FILE NUMBER: AE-TYPICALS

U.S. ARMY CORPS OF ENGINEERS
NEW ORLEANS DISTRICT
NEW ORLEANS, LOUISIANA

USACE - NEW ORLEANS
HURRICANE DESIGN GUIDELINES
A/E TYPICAL DRAWINGS

SWING GATES
SEAL DETAILS
(1 OF 2)

SHEET IDENTIFICATION
X-00

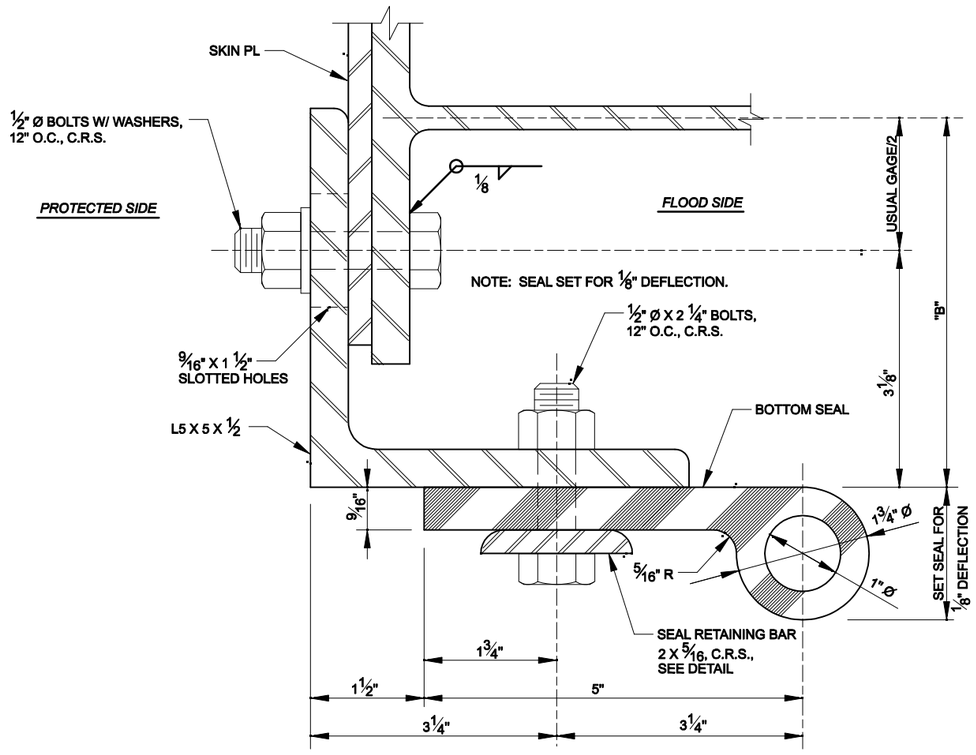

SECTION (B)

SCALE: 1" = 1' - 0"

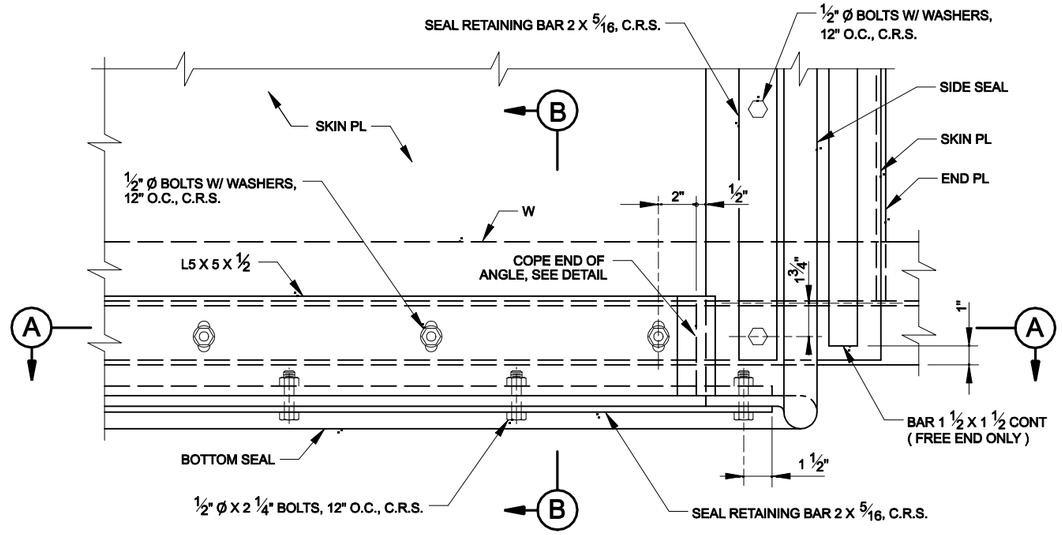

END ELEVATION - PROTECTED SIDE

SCALE: 3" = 1' - 0"

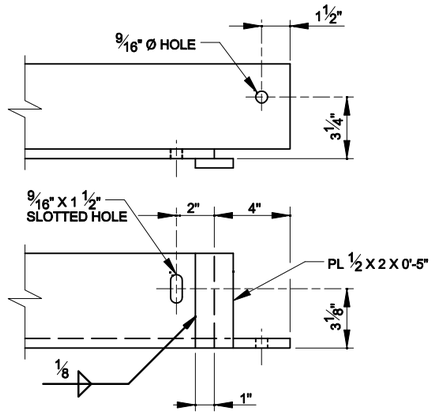

END OF L5 X 5 X 1 / 2

SCALE: 3" = 1' - 0"

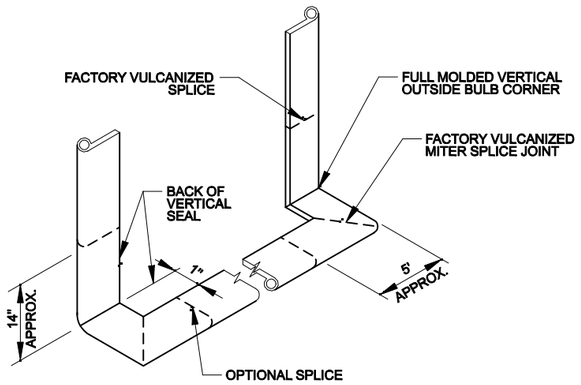

CORNER DETAIL, TYPICAL BOTH SIDES

TYPICAL GATE SEAL

NTS

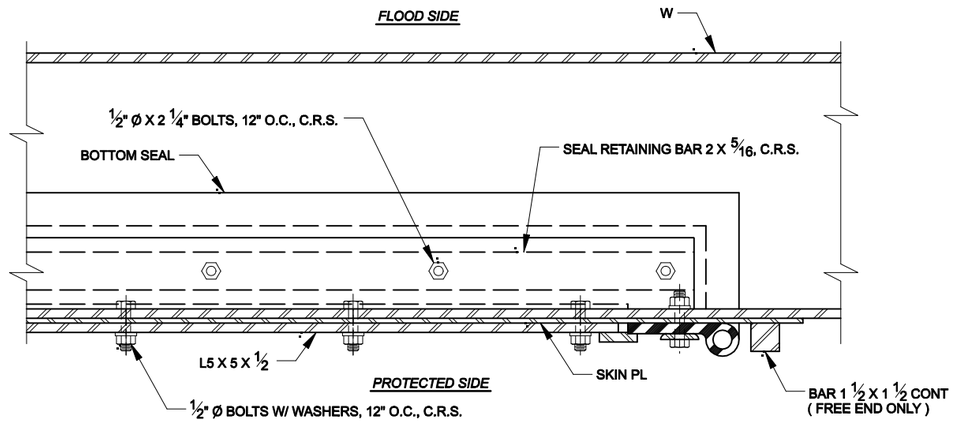

SECTION (A)

NOTES:

1. FOR GENERAL NOTES, SEE DWG. X.
2. ALL SPLICES WILL BE FACTORY MADE IN HEAVY STEEL PRESS TYPE MOLDS UNDER PRESSURE AD HEAT.
3. ALL SPLICE JOINTS MUST DEVELOP STRENGTH OF AT LEAST 50% OF THE MINIMUM TENSILE STRENGTH REQUIRED OF THE RUBBER.
4. SEAL CLAMP ANGLES SHALL BE PAINTED ON ALL SIDES PRIOR TO ASSEMBLY.
5 AFTER ASSEMBLY AND SEAL ADJUSTMENTS ARE MADE, ALL GAPS IN SEALS AND SEAL SUPPORTS SHALL BE SEALED WITH A SILICONE RUBBER SEALANT TO PROVIDE WATERTIGHT JOINTS.

SCALE: 3"=1'
0 3" 6" 9" 12"

SCALE:1"=1"
0 1" 2"

US Army Corps of Engineers®
NEW ORLEANS DISTRICT

MARK	DESCRIPTION	DATE	APPR.

MARK	DESCRIPTION	DATE	APPR.

DESIGNED BY: USACE - NEW ORLEANS
DWN BY:
SUBMITTED BY:
DATE: MAY 2008
SOLICITATION NO.:
CONTRACT NO.:
PLOT SCALE: 1" = 1"
PLOT DATE:
SIZE: ANSI D
FILE NUMBER: A/E TYPICALS
FILE NAME: A/E-TYPEDGN

U.S. ARMY CORPS OF ENGINEERS
NEW ORLEANS DISTRICT
NEW ORLEANS, LOUISIANA

USACE - NEW ORLEANS
HURRICANE DESIGN GUIDELINES
A/E TYPICAL DRAWINGS
-
SWING GATES
SEAL DETAILS
(2 OF 2)

SHEET IDENTIFICATION
X-00

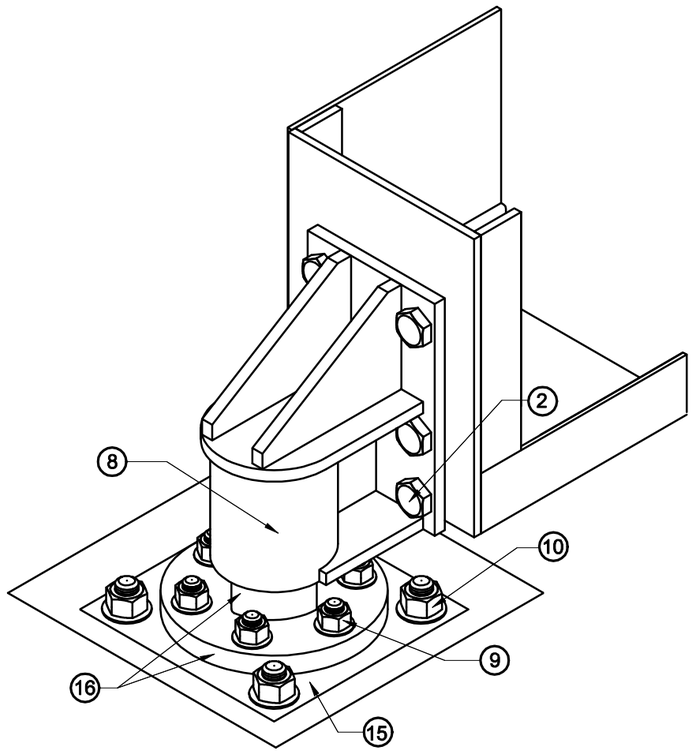

STANDARD LOWER HINGE

SCALE: 3" = 1' - 0"

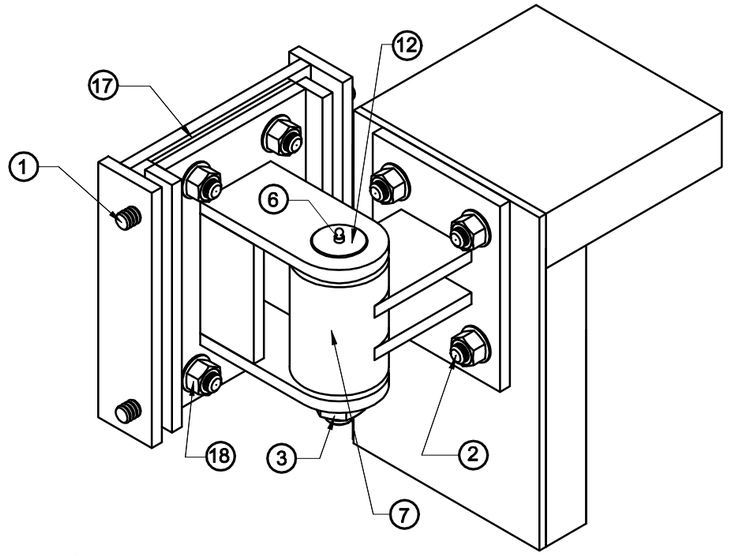

STANDARD UPPER HINGE

SCALE: 3" = 1' - 0"

REFERENCE DRAWINGS

FOR GENERAL NOTES, SEE DWG. 2
FOR PLAN AND PROFILE, SEE DWGS.
FOR SWING GATE MONOLITH DETAILS, SEE DWG.
FOR SWING GATE DETAILS, SEE DWGS.
FOR SWING GATE HINGE DETAILS, SEE DWGS.

MARK NO.	QUANTITY	DESCRIPTION	MATERIAL
PARTS NOT DETAILED			
1	4	SET SCREW - HEX SOCKET, 1" Ø X 2 1/2" LONG, CLASS 3A, FLAT POINT	FED. SPEC. FF-S-200A(2) C.R.S., ALLOY 304
2	10	1" Ø X 3" LONG HEX BOLT WITH NUT AND FLAT WASHER 1 1/16" I.D. X 2 1/2"O.D. X 5/32" THK.	ASTM F593, GROUP 2, ALLOY 316, CONDITION CW
3	1	NUT, HEAVY HEX 1 1/2"-6 UNC-2B, W/ FLAT WASHER 1 5/8" I.D. X 3 1/2"O.D. X 3/16" THK.	ASTM F594, GROUP 2, ALLOY 316, CONDITION CW
4	2	GREASE SEAL, GARLOCK KLOZURE NO. 63 - 2176 OR EQUAL	COMMERCIAL GRADE
5	1	GREASE SEAL, GARLOCK KLOZURE NO. 53 - 2753 OR EQUAL	COMMERCIAL GRADE
6	2	GREASE FITTING, 1/8" N.P.T. TYPE	COMMERCIAL GRADE
7	1	MECHANICAL TUBING, 5 1/4" O.D. X 4" I.D. X 7" LONG MACHINED FOR CLASS 6 FIT BETWEEN I.D. OF TUBING AND O.D. OF MK-11 BUSHING	A-513, TYPE 6
8	1	MECHANICAL TUBING, 6 3/4" O.D. X 5 1/2" I.D. X 7 1/2" LONG MACHINED FOR CLASS 6 FIT BETWEEN I.D. OF TUBING AND O.D. OF MK-14 BUSHING	A-513, TYPE 6
9	6	1" Ø X 4" LONG HEX BOLT WITH NUT AND FLAT WASHER 1 1/16" I.D. X 2 1/2" O.D. X 5/32" THK.	SAME AS MARK NO. 2

MARK NO.	QUANTITY	DESCRIPTION		MATERIAL
-PARTS DETAILED-				
10	4	1 1/4" Ø X 2'-0" LONG HEX BOLT WITH DBL. NUT AND FLAT WASHERS		SAME AS MARK NO. 2
11	1	BUSHING, 4" O.D. X 3" I.D. X 6" LONG		B-22, NO.937
12	1	UPPER HINGE SHAFT, 2.99" O.D. X 11 1/2" LONG		A-276, TYPE 431
13	1	THRUST WASHER, 5 7/16" Ø WITH 1/2" HOLE		B-22, NO.937
14	1	BUSHING, 5 1/2" O.D. X 4 1/2" I.D. X 6" LONG		B-22, NO.937
15	1	BASE PLATE 1 1/4" X 14 1/2 X 1'-2 1/2"		STEEL A-36
16	1	BEARING	PLATE 1 1/4 X 12" Ø	A-276, TYPE 304
		PEDESTAL	SHAFT 4 1/2" Ø X 10 1/2" LONG	A 276, TYPE 431
17	AS REQ'D	SHIM PLATE 1/8 X 5 X 0'-12"		STEEL A-36
18	4	1" Ø X 12" LONG HEX BOLT WITH NUT & WASHER		SAME AS MARK NO. 2
19	2	PLATE 3/8 X 3 X 0'-9"		STEEL A-36
20	4	PLATE 3/8 X 4 X 0'-4"		STEEL A-36

NOTE: QUANTITIES SHOWN ARE FOR ONE COMPLETE SWING GATE.

SCALE: 3"=1'

0 3" 6" 9" 12"

US Army Corps of Engineers®
NEW ORLEANS DISTRICT

MARK	DESCRIPTION	DATE	APPR.

MARK	DESCRIPTION	DATE	APPR.

DESIGNED BY: USACE - NEW ORLEANS
DWN BY: CKD BY:
SUBMITTED BY:
DATE: MAY 2008
SOLICITATION NO.:
CONTRACT NO.:
FILE NUMBER: A/E TYPICALS
PLOT SCALE: 1" = 1'
PLOT DATE:
SIZE: ANSI D
FILE NAME: AE-TYPRSLDGN

U.S. ARMY CORPS OF ENGINEERS
NEW ORLEANS DISTRICT
NEW ORLEANS, LOUISIANA

USACE - NEW ORLEANS
HURRICANE DESIGN GUIDELINES
A/E TYPICAL DRAWINGS
~
SWING GATES
STANDARD HINGES (ISOMETRIC)
~

SHEET IDENTIFICATION
X-00

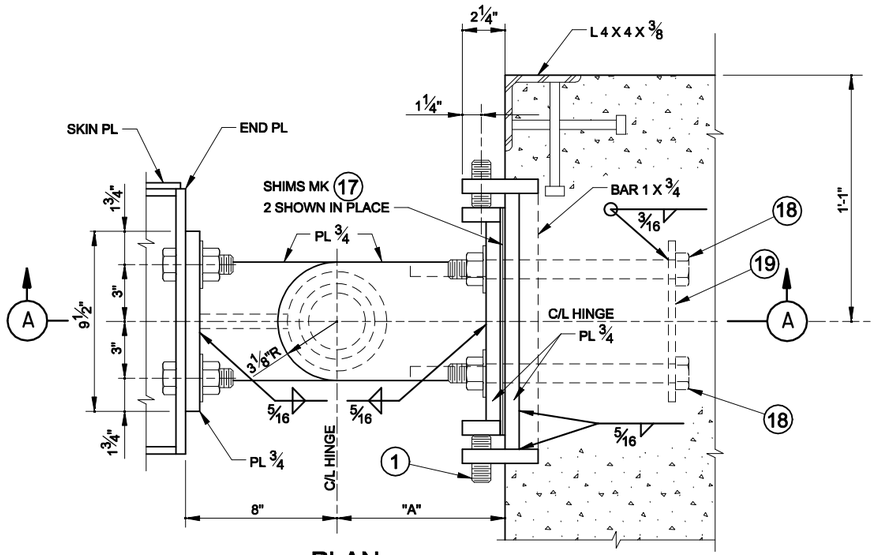

PLAN

DIMENSION "A" :
SEE SWING GATE SEAL DETAILS
DWGS. AETYP03.DGN AND
AETYP03R.DGN.

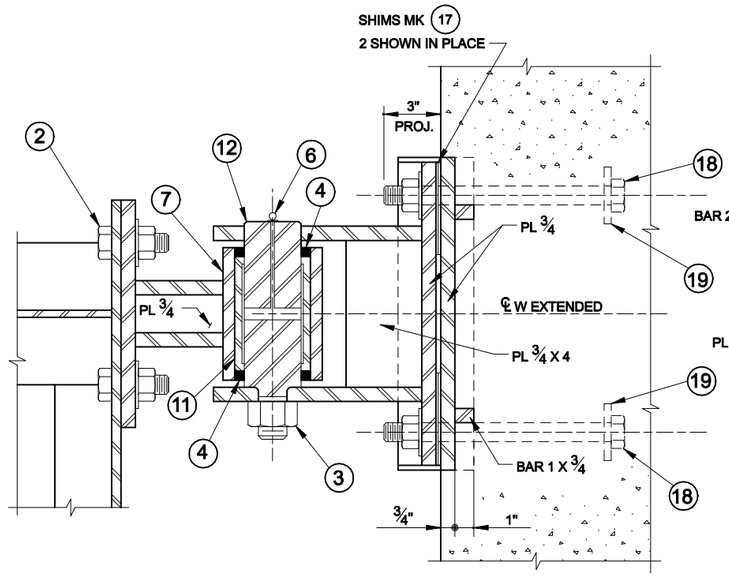

SECTION (A)

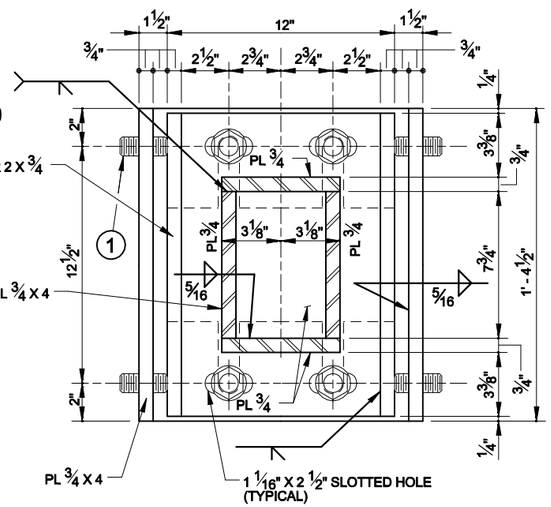

SECTION (C)

UPPER HINGE

SCALE: 3" = 1'-0"

NOTE:
WELDS SHOWN ARE TYPICAL FOR
SIMILAR JOINTS WHERE NOT SHOWN.

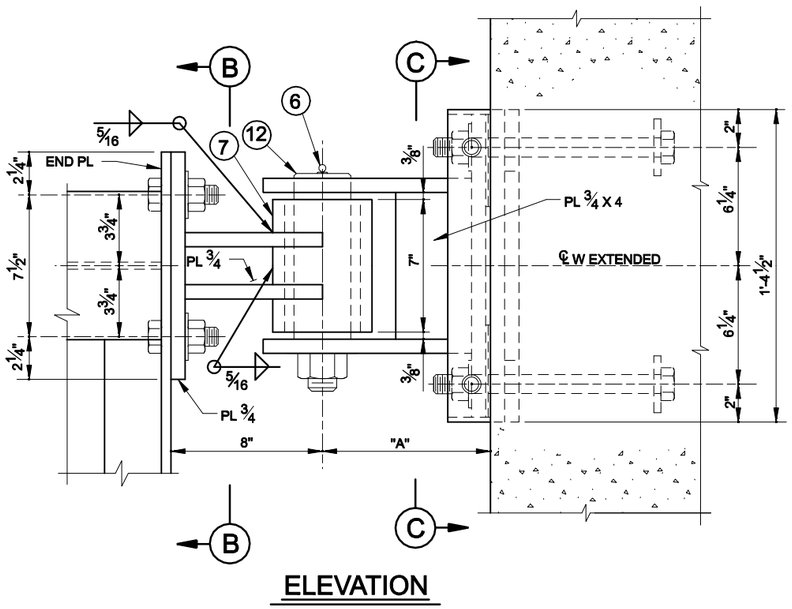

ELEVATION

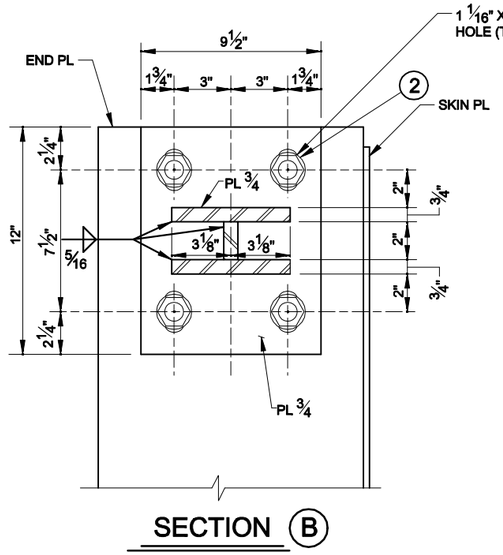

SECTION (B)

NOTE:

(10) DENOTES MARK NUMBERS, SEE PLATE

REFERENCE DRAWINGS

FOR GENERAL NOTES, SEE DWG. XX
FOR PLAN AND PROFILE, SEE DWGS. XX
FOR SWING GATE MONOLITH DETAILS, SEE DWG. XX
FOR SWING GATE SEAL DETAILS, SEE DWG. XX
FOR MISCELLANEOUS DETAILS, SEE DWG. XX

SCALE: 3"=1'
0 3" 6" 9" 12"

US Army Corps of Engineers
NEW ORLEANS DISTRICT

MARK	DESCRIPTION	DATE	APPR.
MARK	DESCRIPTION	DATE	APPR.

DESIGNED BY: USACE - NEW ORLEANS
DWN BY:
CKD BY:
SUBMITTED BY:
DATE: MAY 2008
SOLICITATION NO.:
CONTRACT NO.:
PLOT SCALE: 3" = 1"
PLOT DATE:
SIZE: ANSI D
FILE NUMBER: A/E TYPICALS
FILE NAME: AE-TYPXX.DGN

U.S. ARMY CORPS OF ENGINEERS
NEW ORLEANS DISTRICT
NEW ORLEANS, LOUISIANA

USACE - NEW ORLEANS
HURRICANE DESIGN GUIDELINES
A/E TYPICAL DRAWINGS
-
SWING GATES
HINGE SECTIONS
(1 OF 2)

SHEET IDENTIFICATION
X-00

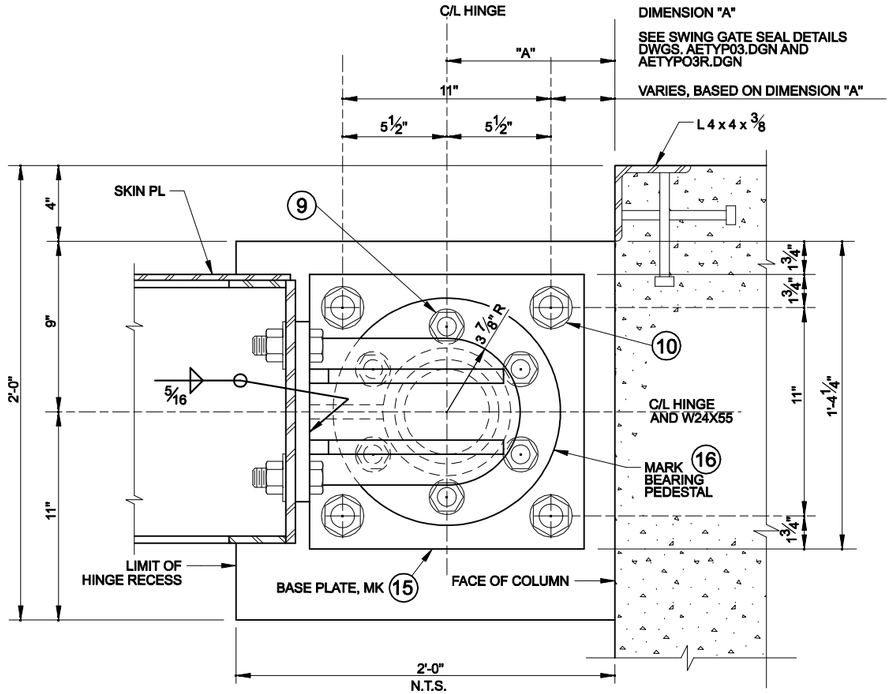

PLAN

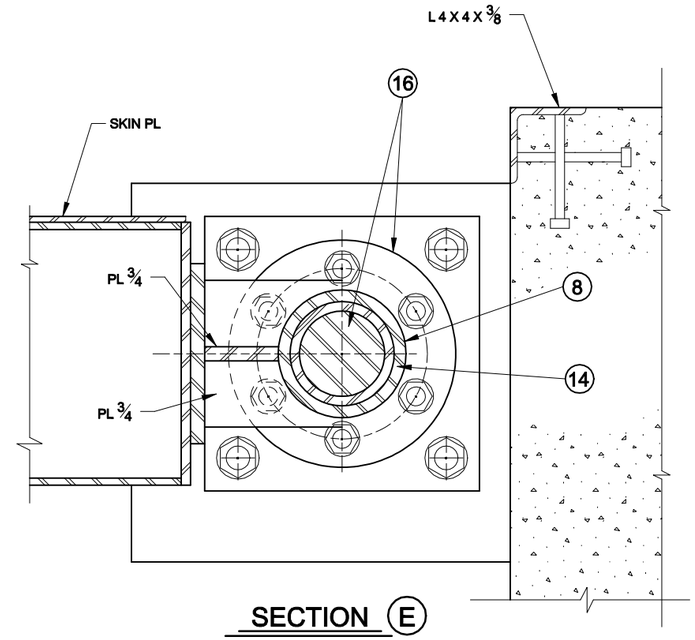

SECTION E

NOTE:

(10) DENOTES MARK NUMBERS, SEE PLATE XX

REFERENCE DRAWINGS

FOR GENERAL NOTES, SEE DWG. XX
FOR PLAN AND PROFILE, SEE DWGS. XX
FOR SWING GATE MONOLITH DETAILS, SEE DWG. XX
FOR SWING GATE SEAL DETAILS, SEE DWG. XX
FOR MISCELLANEOUS DETAILS, SEE DWG. XX

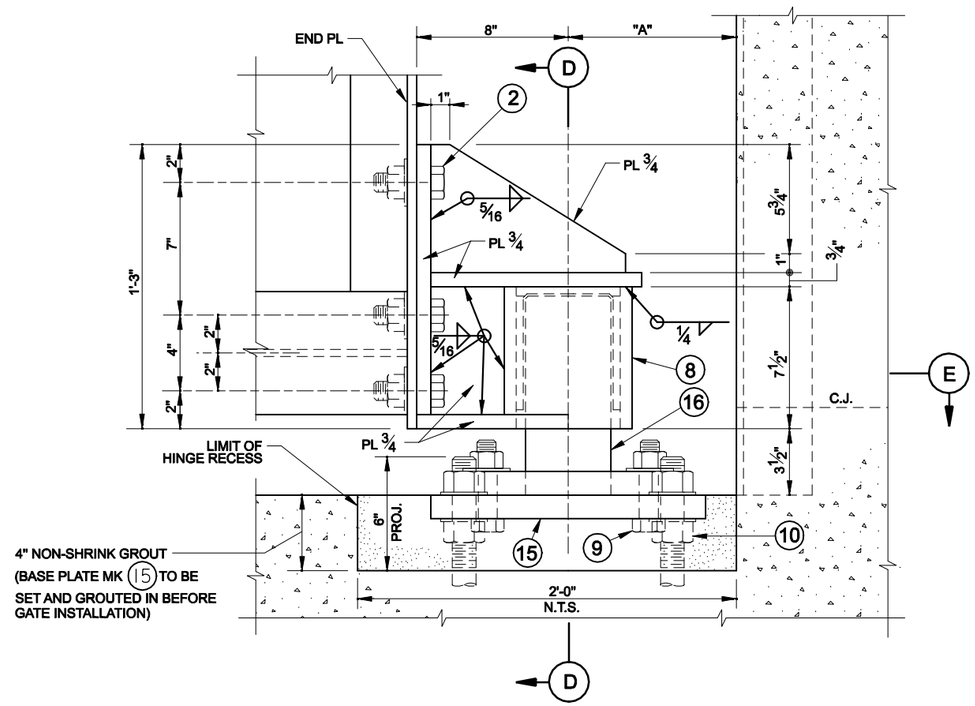

ELEVATION

LOWER HINGE

SCALE: 3" = 1'-0"

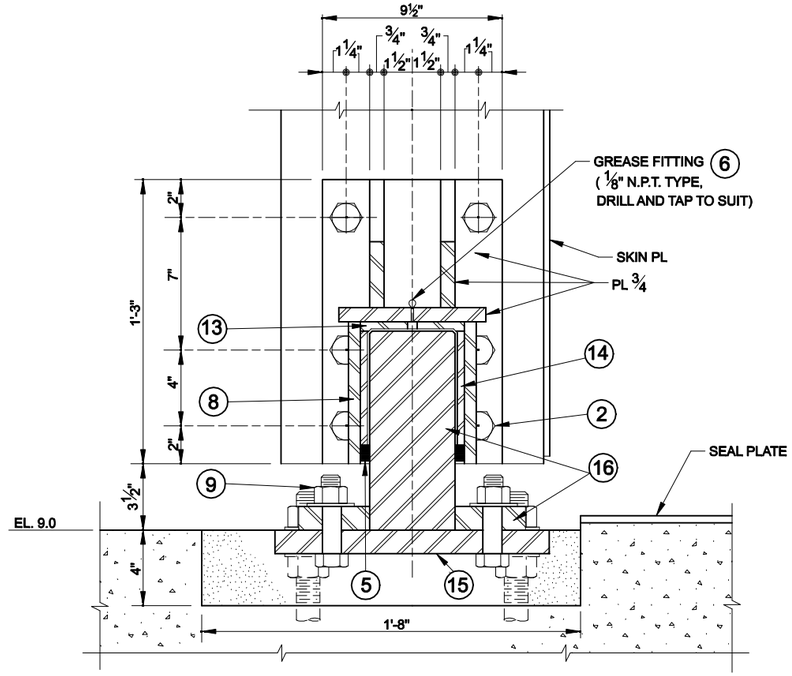

SECTION D

SCALE: 3"=1'
0 3" 6" 9" 12"

US Army Corps of Engineers
NEW ORLEANS DISTRICT

MARK	DESCRIPTION	DATE	APPR.

MARK	DESCRIPTION	DATE	APPR.

DESIGNED BY: USACE - NEW ORLEANS
DRWN BY:
SUBMITTED BY:
CKD BY:
DATE: MAY 2008
SOLICITATION NO.:
CONTRACT NO.:
FILE NUMBER: AETYPICALS
PLOT SCALE: 2" = 1'
PLOT DATE:
SIZE: ANSI D
FILE NAME: AE-TYPM.DGN

U.S. ARMY CORPS OF ENGINEERS
NEW ORLEANS DISTRICT
NEW ORLEANS, LOUISIANA

USACE - NEW ORLEANS
HURRICANE DESIGN GUIDELINES
A/E TYPICAL DRAWINGS
-
SWING GATES
HINGE SECTIONS
(2 OF 2)

SHEET IDENTIFICATION
X-00

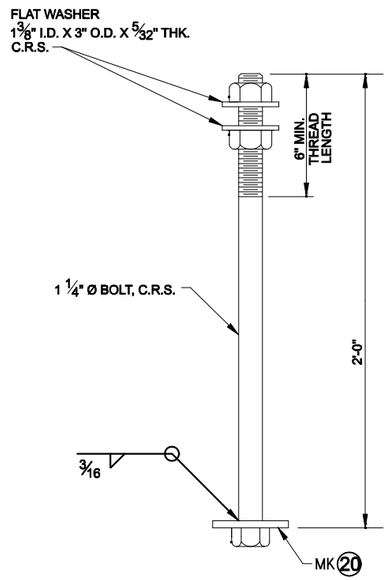

MK-10
ANCHOR BOLT
SCALE: 3" = 1'-0"

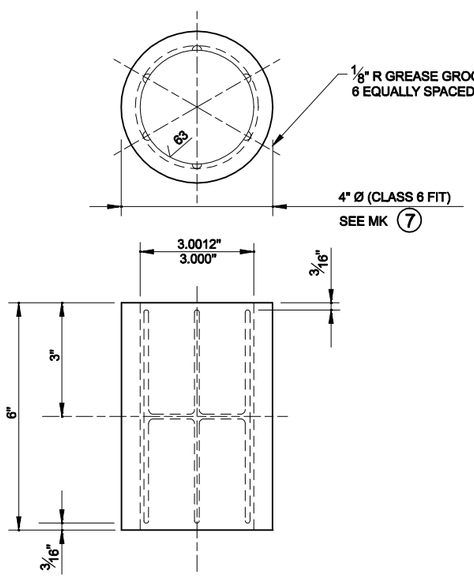

MK-11
BUSHING
SCALE: 6" = 1'-0"

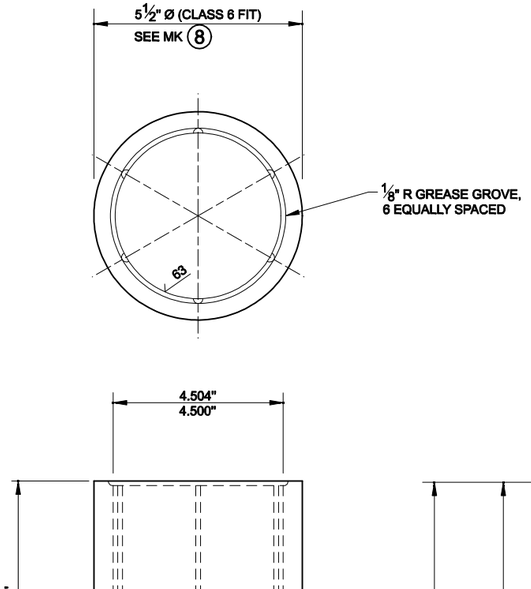

MK-14
BUSHING
SCALE: 6" = 1'-0"

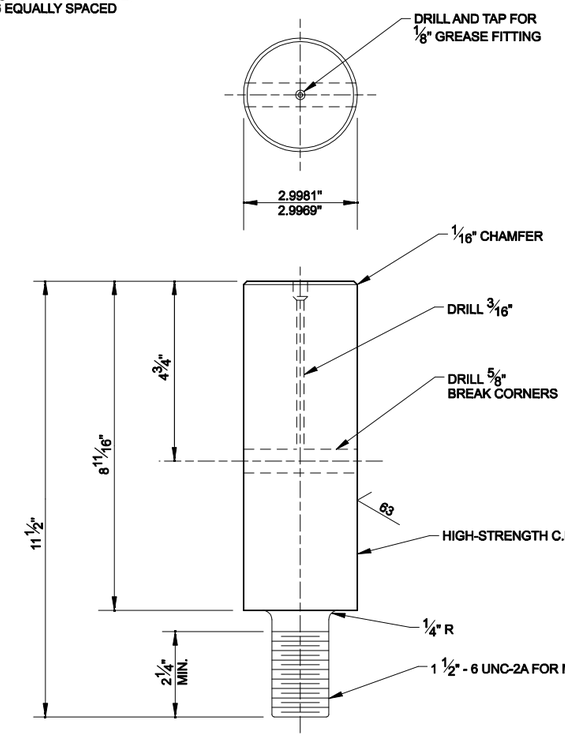

MK-12
UPPER HINGE SHAFT
SCALE: 6" = 1'-0"

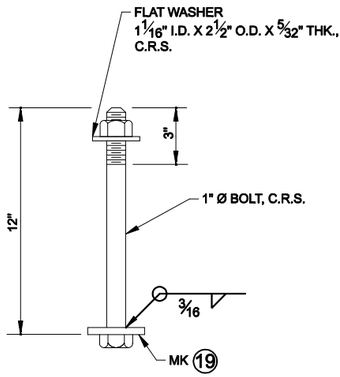

MK-18
ANCHOR BOLT
SCALE: 3" = 1'-0"

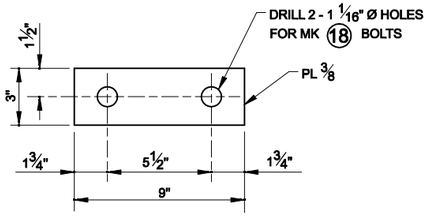

MK-19
PLATE
SCALE: 3" = 1'-0"

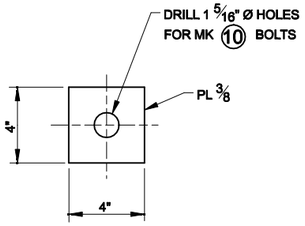

MK-20
PLATE
SCALE: 3" = 1'-0"

REFERENCE DRAWINGS

FOR GENERAL NOTES, SEE DWG. XX
FOR PLAN AND PROFILE, SEE DWGS. XX
FOR SWING GATE MONOLITH DETAILS, SEE DWGS XX
FOR SWING GATE DETAILS, SEE DWGS. XX
FOR MARK NUMBERS, SEE DWG. XX

SCALE: 3"=1'
0 3" 6" 9" 12"

SCALE: 6"=1'
0 3" 6" 9" 12"

US Army Corps of Engineers®
NEW ORLEANS DISTRICT

MARK	DESCRIPTION	DATE	APPR.

MARK	DESCRIPTION	DATE	APPR.

U.S. ARMY CORPS OF ENGINEERS
NEW ORLEANS DISTRICT
NEW ORLEANS, LOUISIANA

DESIGNED BY: USACE - NEW ORLEANS
DWN BY:
SUBMITTED BY:
CKD BY:
PLOT SCALE: PLOT DATE:
PLOT STYLE TABLE:
SIZE: ANSI D
FILE NAME: AE-TYPDET
DATE: MAY 2008
SOLICITATION NO.:
CONTRACT NO.:
FILE NUMBER: AE-TYPDET

USACE - NEW ORLEANS
HURRICANE DESIGN GUIDELINES
A/E TYPICAL DRAWINGS
-
SWING GATES
HINGE DETAILS
(1 OF 2)

SHEET IDENTIFICATION
X-00

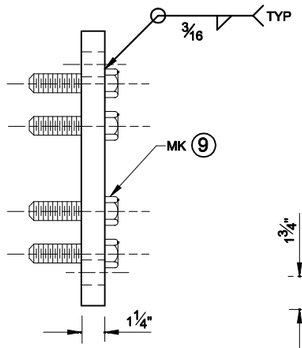

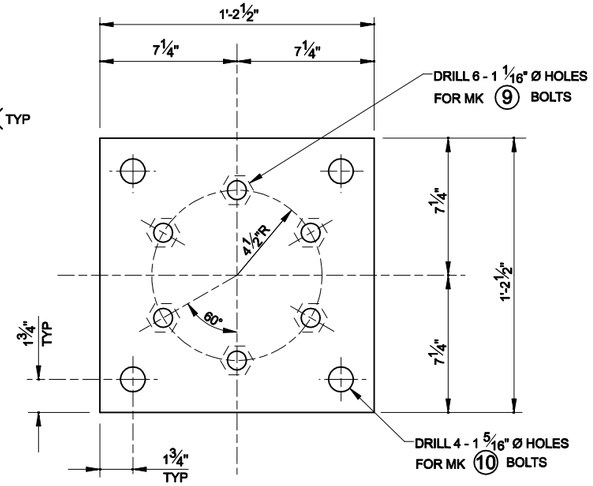

MK-15
BASE PLATE
SCALE: 3" = 1'-0"

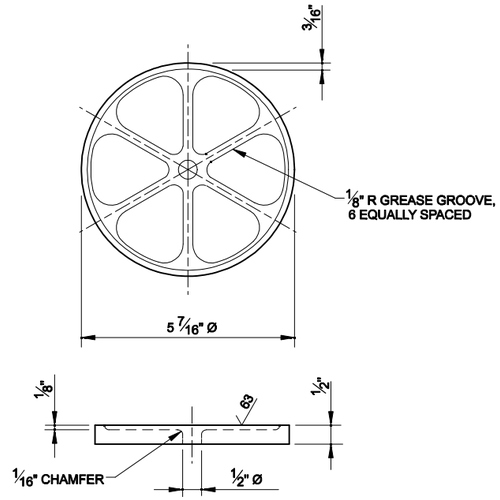

MK-13
THRUST WASHER
SCALE: 6" = 1'-0"

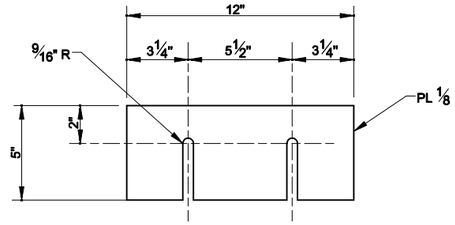

MK-17
SHIM
SCALE: 3" = 1'-0"

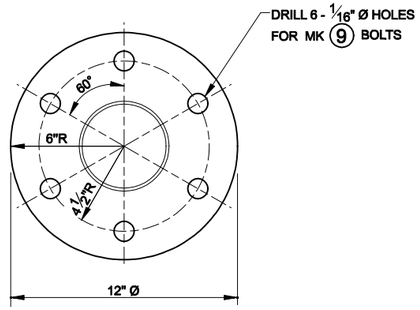

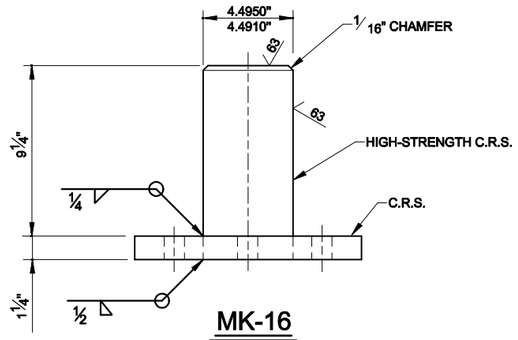

MK-16
BEARING PEDESTAL
SCALE: 3" = 1'-0"

REFERENCE DRAWINGS

FOR GENERAL NOTES, SEE DWG. XX
FOR PLAN AND PROFILE, SEE DWGS. XX
FOR SWING GATE MONOLITH DETAILS, SEE DWG XX
FOR SWING GATE DETAILS, SEE DWGS. XXX
FOR MARK NUMBERS, SEE DWG. XXX

SCALE: 3"=1'
0 3" 6" 9" 12"

SCALE: 6"=1'
0 3" 6" 9" 12"

US Army Corps of Engineers®
NEW ORLEANS DISTRICT

MARK	DESCRIPTION	DATE	APPR.
MARK	DESCRIPTION	DATE	APPR.

DESIGNED BY: USACE - NEW ORLEANS
DWN BY:
CKD BY:
SUBMITTED BY:
DATE: MAY 2008
SOLICITATION NO.:
CONTRACT NO.:
PLOT SCALE: 2" = 1"
PLOT DATE:
SIZE: ANSI D
FILE NUMBER: A/E TYPICALS
FILE NAME: AE-TYPMKDGN

U.S. ARMY CORPS OF ENGINEERS
NEW ORLEANS DISTRICT
NEW ORLEANS, LOUISIANA

USACE - NEW ORLEANS
HURRICANE DESIGN GUIDELINES
A/E TYPICAL DRAWINGS
-
SWING GATES
HINGE DETAILS
(2 OF 2)

SHEET IDENTIFICATION
X-00

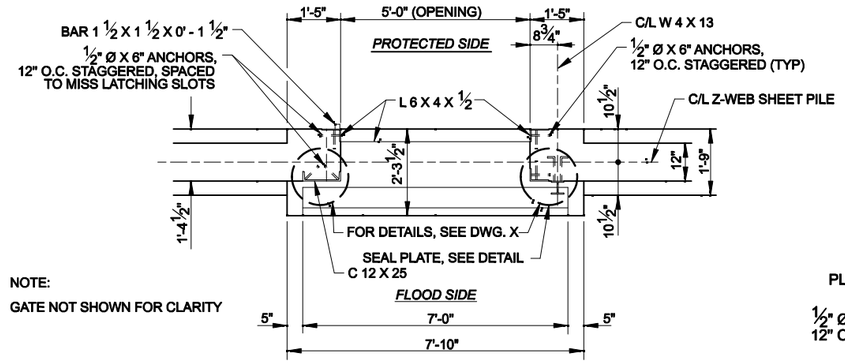

NOTE:
GATE NOT SHOWN FOR CLARITY

PLAN
SCALE: ½" = 1'- 0"

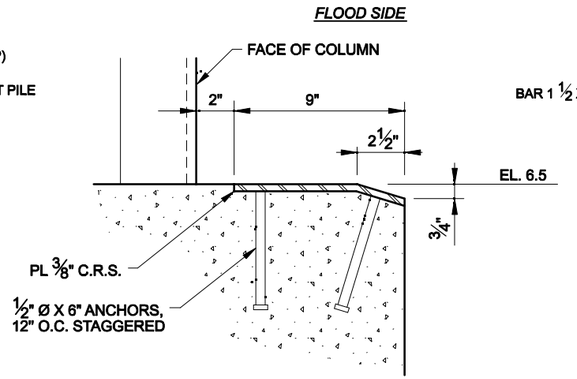

SEAL PLATE DETAIL
SCALE: 3" = 1' - 0"

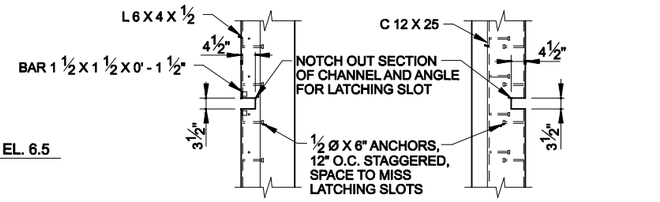

PROTECTED SIDE ELEVATION FLOOD SIDE ELEVATION

TYPICAL DETAIL AT LATCHING SLOTS
SCALE: ½" = 1'- 0"

A

FLOOD SIDE ELEVATION
SCALE: ½" = 1'- 0"

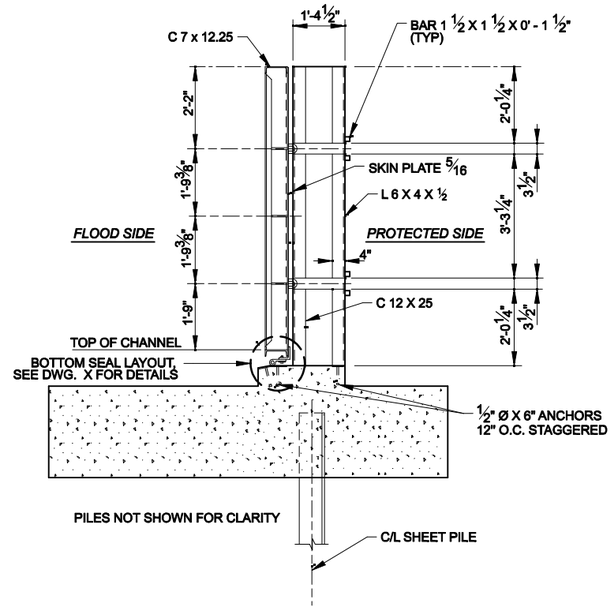

SECTION A
SCALE: ½" = 1'- 0"

NOTES:

1. FOR GENERAL NOTES SEE DWG. X AND X.
2. FOR GATE MONOLITH REINFORCING SEE DWG. X.
3. FOR SEAL DETAILS, SEE DWG. X.
4. CONTRACTOR MAY PROPOSE USE OF A MANUFACTURED GATE. GATE TYPE SUBJECT TO APPROVAL BY CONTRACTING OFFICER.

SCALE:1/2"=1'
0 1' 2' 4'

SCALE: 3"=1'
0 3" 6" 9" 12"

US Army Corps of Engineers
NEW ORLEANS DISTRICT

MARK	DESCRIPTION	DATE	APPR.

MARK	DESCRIPTION	DATE	APPR.

DESIGNED BY: USACE - NEW ORLEANS
DWN BY:
CKD BY:
SUBMITTED BY:
DATE: MAY 2008
SOLICITATION NO.:
CONTRACT NO.:
PLOT SCALE: 3"=1'
SIZE: ANSI D
PLOT DATE:
FILE NUMBER: A/E TYPICALS
FILE NAME: AE-TYPFDGN

U.S. ARMY CORPS OF ENGINEERS
NEW ORLEANS DISTRICT
NEW ORLEANS, LOUISIANA

USACE - NEW ORLEANS
HURRICANE DESIGN GUIDELINES
A/E TYPICAL DRAWINGS
~
PEDESTRIAN GATES
MASONRY
~

SHEET IDENTIFICATION
X-00

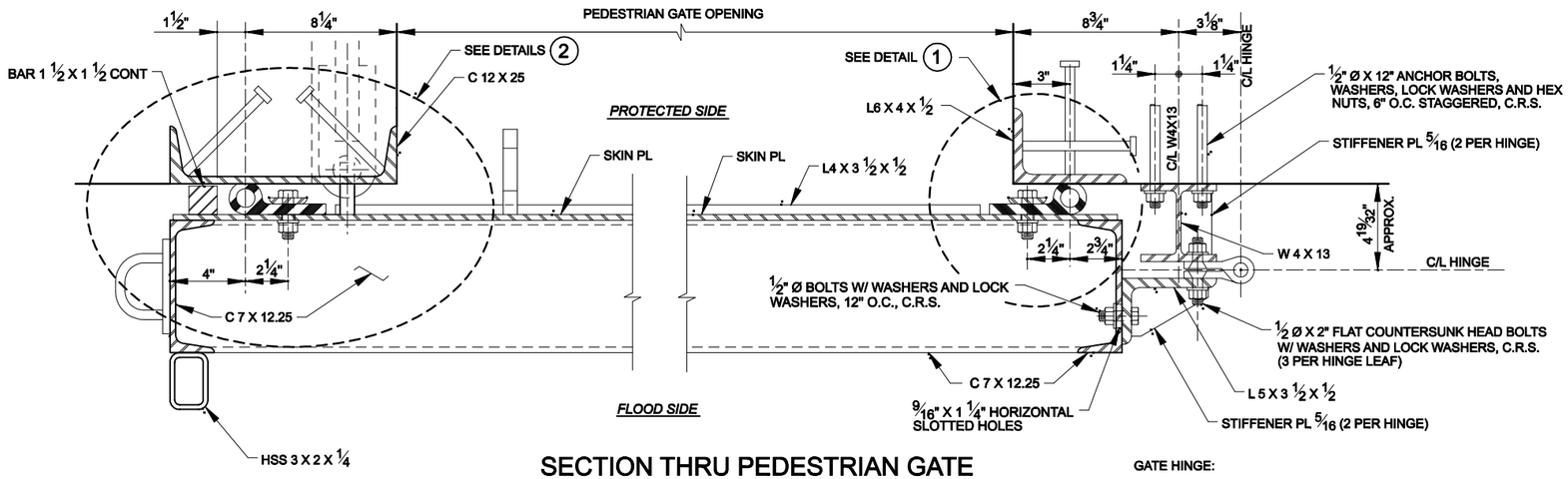

SECTION THRU PEDESTRIAN GATE

SCALE: 3" = 1' - 0"

GATE HINGE:

PRISON TYPE, FULL MORTISE, SWAGED STEEL WITH STEEL PIN, ITEM NO. BB852 AS MFD. BY STANLEY OR EQUAL (3 EACH)

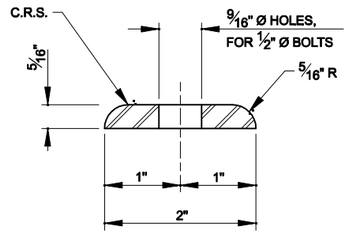

SEAL RETAINING BAR

SCALE: 1" = 1' - 0"

NOTES:

FOR GENERAL NOTES, SEE DWG. X.

ALL SPLICES WILL BE FACTORY MADE IN HEAVY STEEL PRESS TYPE MOLDS UNDER PRESSURE AND HEAT.

ALL SPLICE JOINTS MUST DEVELOP STRENGTH OF AT LEAST 50% OF THE MINIMUM TENSILE STRENGTH REQUIRED OF THE RUBBER.

SEAL CLAMP ANGLES SHALL BE PAINTED ON ALL SIDES PRIOR TO ASSEMBLY.

AFTER ASSEMBLY AND SEAL ADJUSTMENTS ARE MADE, ALL GAP IN SEALS AND SEAL SUPPORTS SHALL BE SEALED WITH A SILICONE RUBBER SEALANT TO PROVIDE WATERTIGHT JOINTS.

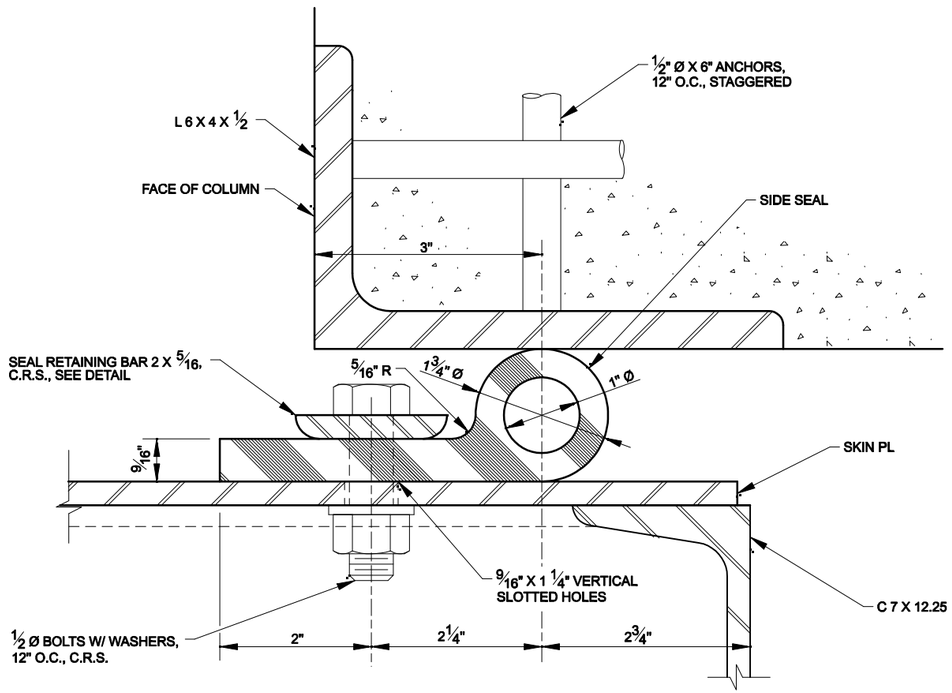

DETAIL (1)

SCALE: 1" = 1' - 0"

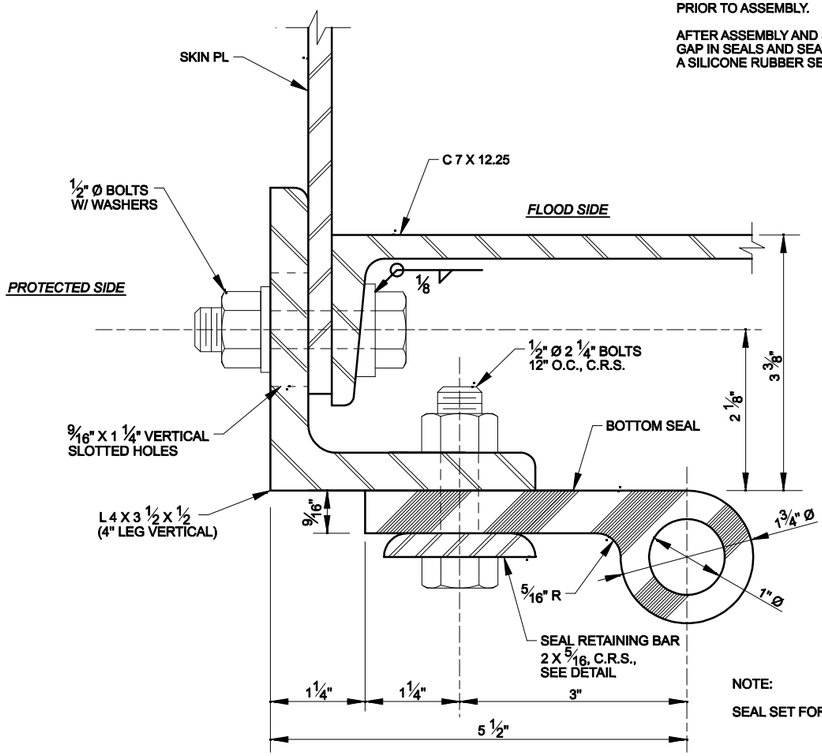

NOTE:

SEAL SET FOR ⅛" DEFLECTION

SECTION (B)

SCALE: 1" = 1' - 0"

SCALE: 3"=1'
0 3" 6" 9" 12"

SCALE:1"=1"
0 1" 2"

US Army Corps of Engineers
NEW ORLEANS DISTRICT

MARK	DESCRIPTION	DATE	APPR.

MARK	DESCRIPTION	DATE	APPR.

DESIGNED BY: USACE - NEW ORLEANS
DWN BY:
CKD BY:
SUBMITTED BY:
DATE: MAY 2008
SOLICITATION NO.:
CONTRACT NO.:
PLOT SCALE: 1:1
PLOT DATE:
SIZE: ANSI D
FILE NUMBER: AE-TYP2-45
FILE NAME: AE-TYP7.DGN

U.S. ARMY CORPS OF ENGINEERS
NEW ORLEANS DISTRICT
NEW ORLEANS, LOUISIANA

USACE - NEW ORLEANS
HURRICANE DESIGN GUIDELINES
A/E TYPICAL DRAWINGS
-
PEDESTRIAN GATES
SEAL DETAILS
PROTECTED SIDE OPTION (1 OF 2)

SHEET IDENTIFICATION
X-00

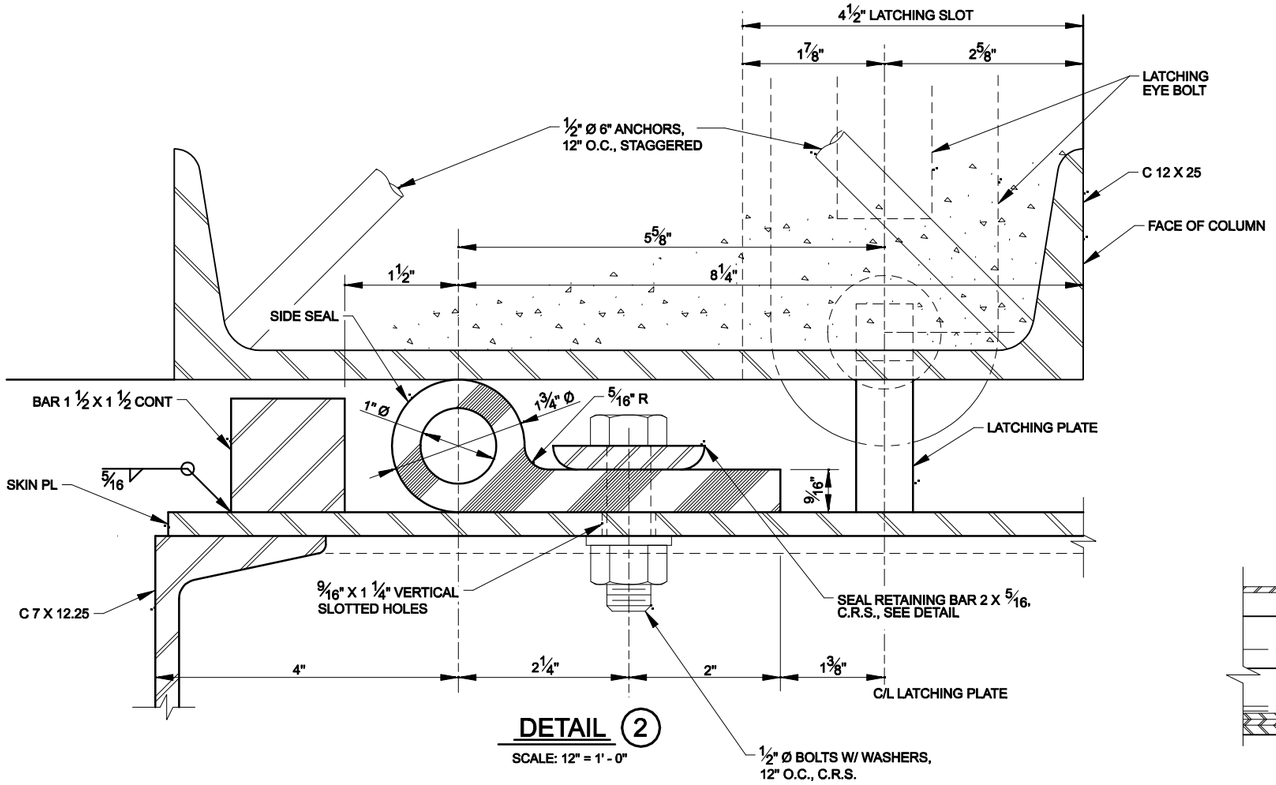

DETAIL (2)

SCALE: 12" = 1' - 0"

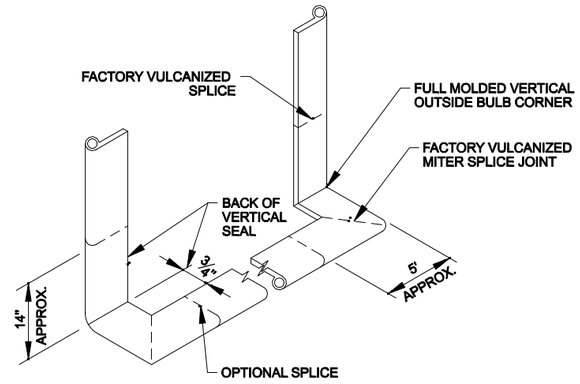

CORNER DETAIL, TYPICAL BOTH SIDES

PEDESTRIAN GATE SEAL

NTS

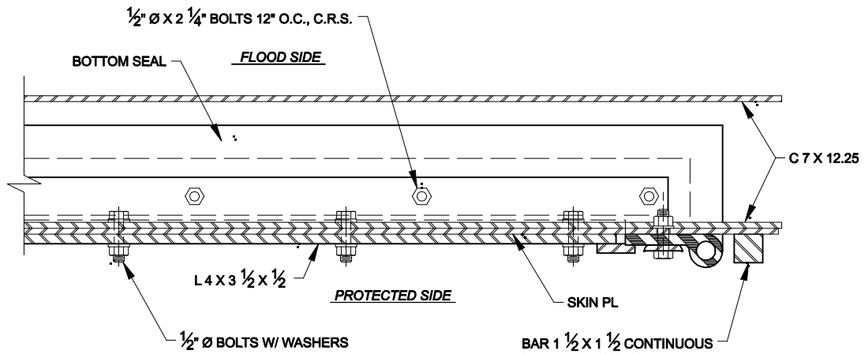

SECTION (A)

SCALE: 3" = 1' - 0"

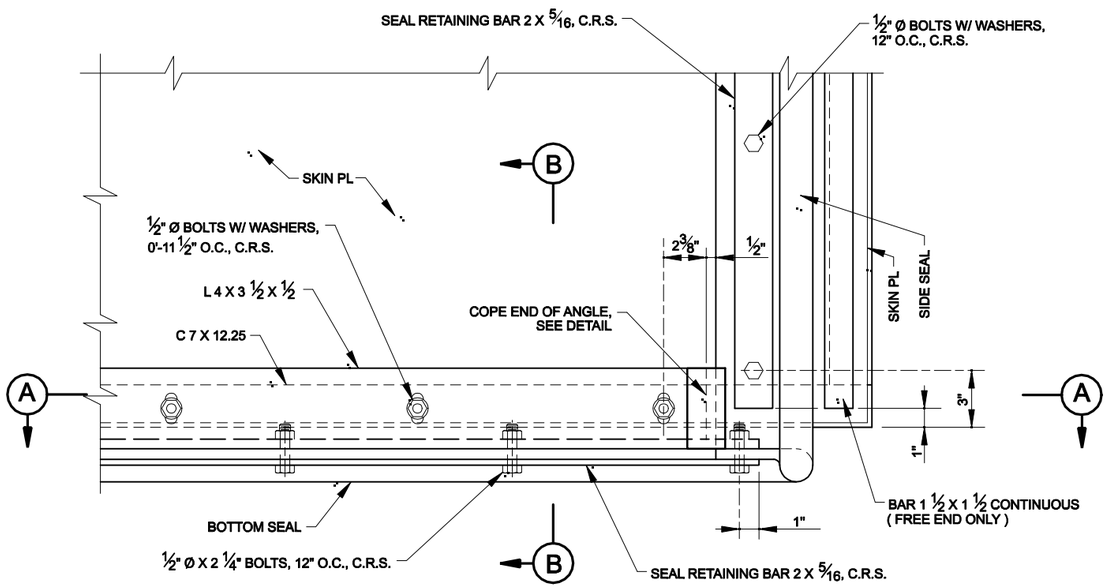

END ELEVATION - PROTECTED SIDE

SCALE: 3" = 1' - 0"

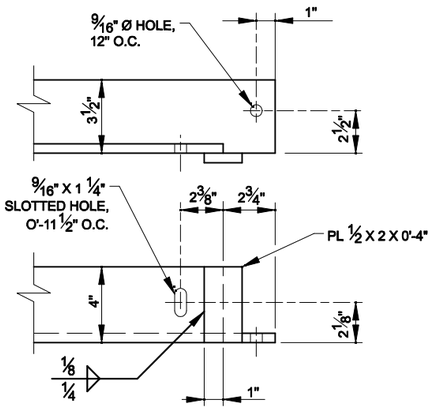

END OF L 4 X 3½ X ½

SCALE: 3" = 1' - 0"

NOTES:

FOR GENERAL NOTES, SEE DWG. X.

ALL SPLICES WILL BE FACTORY MADE IN HEAVY STEEL PRESS TYPE MOLDS UNDER PRESSURE AND HEAT.

ALL SPLICE JOINTS MUST DEVELOP STRENGTH OF AT LEAST 50% OF THE MINIMUM TENSILE STRENGTH REQUIRED OF THE RUBBER.

SEAL CLAMP ANGLES SHALL BE PAINTED ON ALL SIDES PRIOR TO ASSEMBLY.

AFTER ASSEMBLY AND SEAL ADJUSTMENTS ARE MADE, ALL GAP IN SEALS AND SEAL SUPPORTS SHALL BE SEALED WITH A SILICONE RUBBER SEALANT TO PROVIDE WATERTIGHT JOINTS.

SCALE: 3"=1'
0 3" 6" 9" 12"

SCALE:1"=1"
0 1" 2"

US Army Corps of Engineers®
NEW ORLEANS DISTRICT

MARK	DESCRIPTION	DATE	APPR.

MARK	DESCRIPTION	DATE	APPR.

U.S. ARMY CORPS OF ENGINEERS
NEW ORLEANS DISTRICT
NEW ORLEANS, LOUISIANA

DESIGNED BY: USACE - NEW ORLEANS
DWN BY:
SUBMITTED BY:
DATE: MAY 2008
CKD BY:
SOLICITATION NO.:
CONTRACT NO.:
PLOT SCALE: 1:1
PLOT DATE:
FILE NUMBER: A/E TYPICALS
SIZE: ANSI D
FILE NAME: AE-TYP1.DGN

USACE - NEW ORLEANS
HURRICANE DESIGN GUIDELINES
A/E TYPICAL DRAWINGS
-
PEDESTRIAN GATES
SEAL DETAILS
PROTECTED SIDE OPTION (2 OF 2)

SHEET IDENTIFICATION
X-00

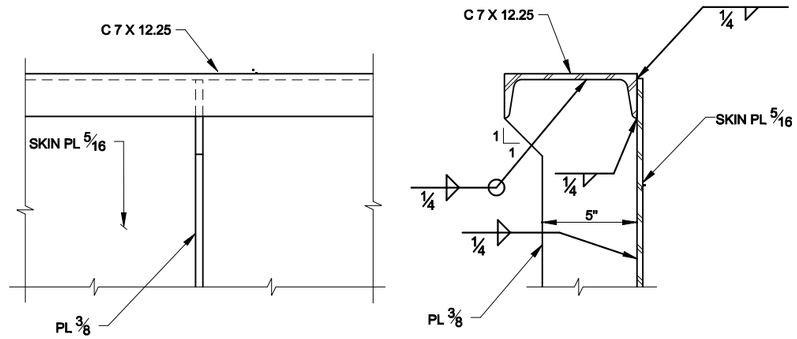

DETAIL 1 X X

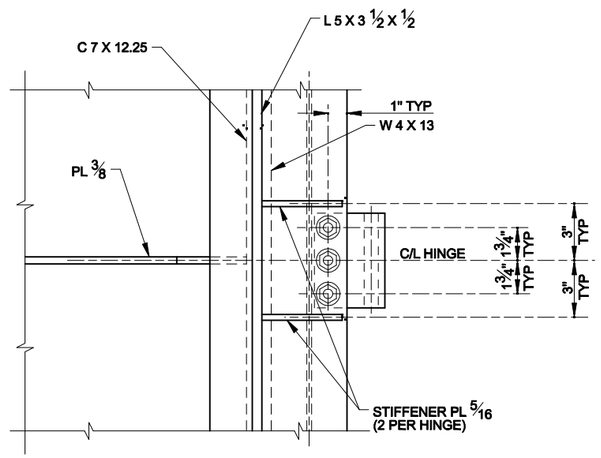

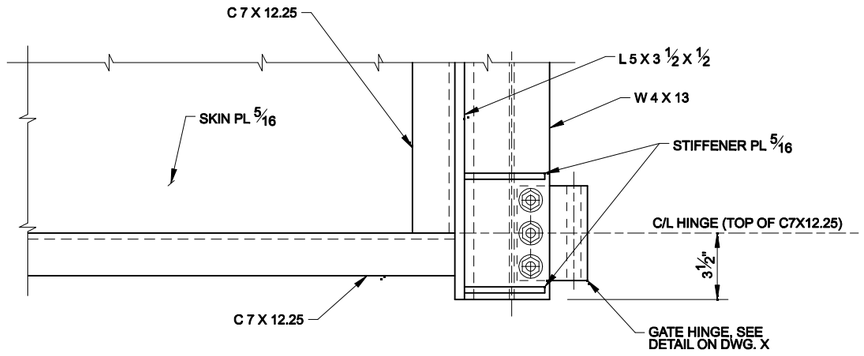

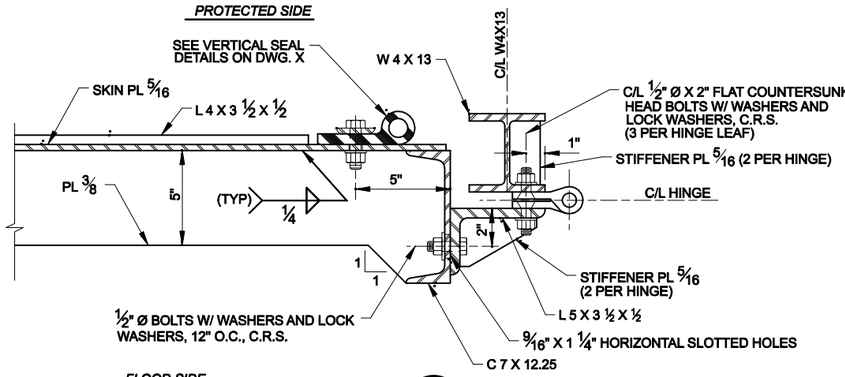

DETAIL 2 X X

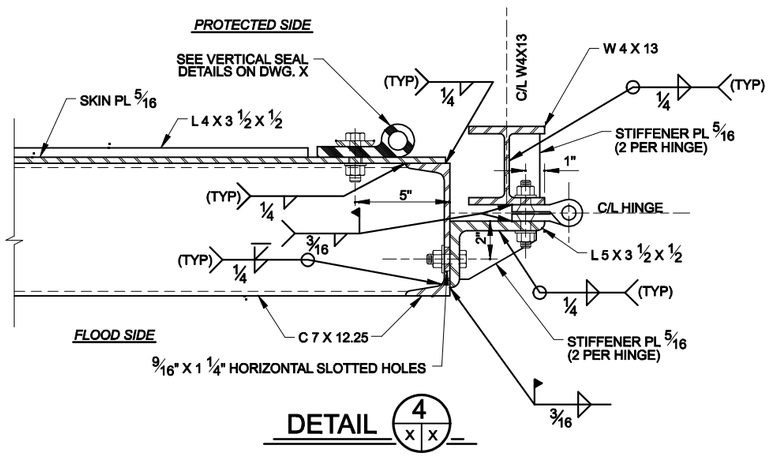

DETAIL 4 X X

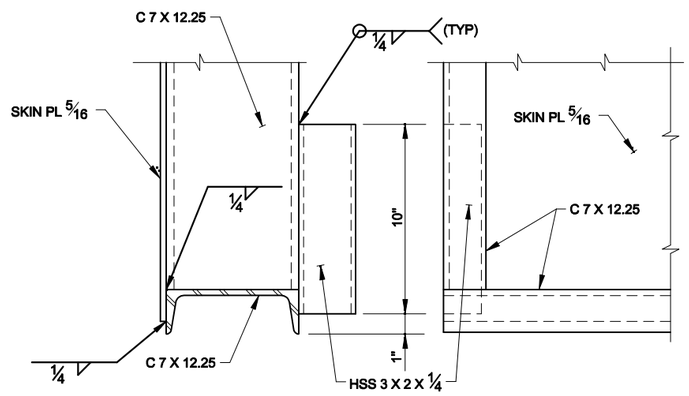

DETAIL 5 X X

SCALE: 3"=1'

0 3" 6" 9" 12"

US Army Corps of Engineers®
NEW ORLEANS DISTRICT

MARK	DESCRIPTION	DATE	APPR.

MARK	DESCRIPTION	DATE	APPR.

U.S. ARMY CORPS OF ENGINEERS
NEW ORLEANS DISTRICT
NEW ORLEANS, LOUISIANA

DESIGNED BY: USACE - NEW ORLEANS
DWN BY:
CKD BY:
SUBMITTED BY:
PLOT SCALE: 3" = 1'
PLOT DATE:
SIZE: ANSI D
FILE NAME: AE-TYP72.DGN
DATE: MAY 2008
SOLICITATION NO.:
CONTRACT NO.:
FILE NUMBER: A/E TYPICALS

USACE - NEW ORLEANS
HURRICANE DESIGN GUIDELINES
A/E TYPICAL DRAWINGS
~
PEDESTRIAN GATES
HINGE DETAILS
PROTECTED SIDE OPTION (1 OF 2)

SHEET IDENTIFICATION
X-00

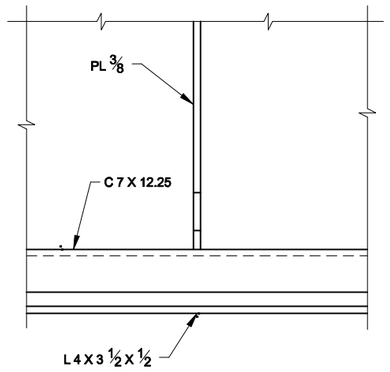

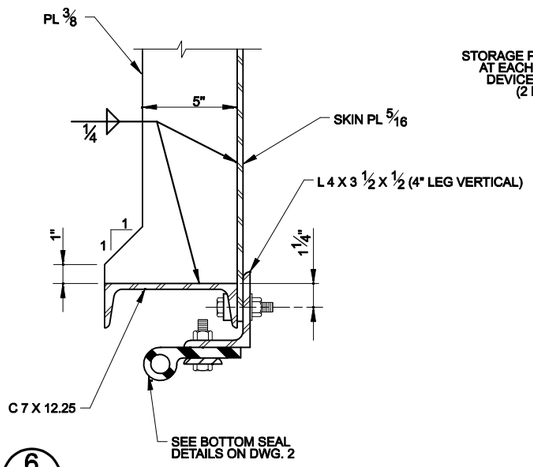

NOTE:

SEAL ASSEMBLY SHOWN IN SOME VIEWS FOR ORIENTATION ONLY.

DETAIL 6 X X

SCALE: 3" = 1' - 0"

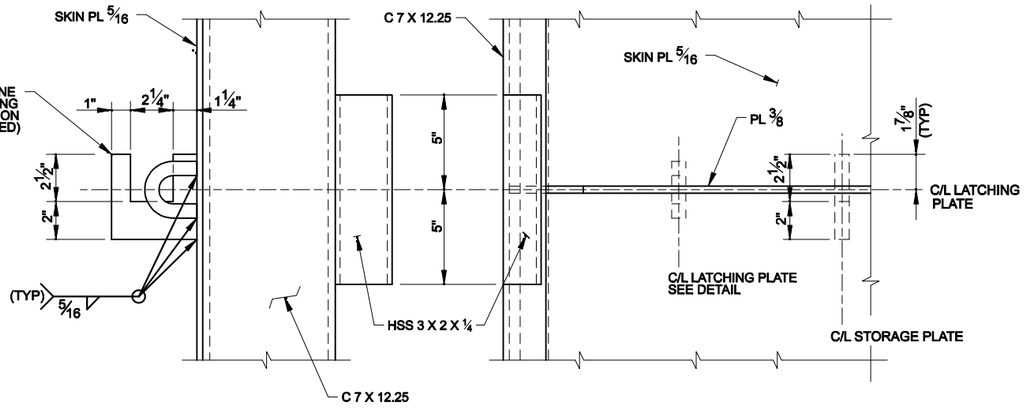

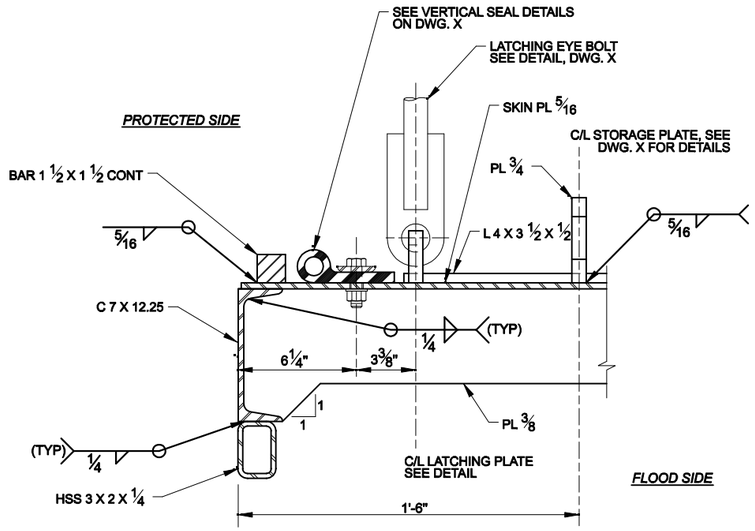

DETAIL 3 X X

SCALE: 3" = 1' - 0"

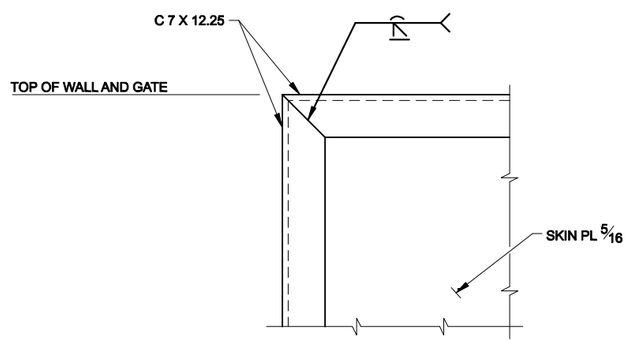

DETAIL 7 X X

SCALE: 3" = 1' - 0"

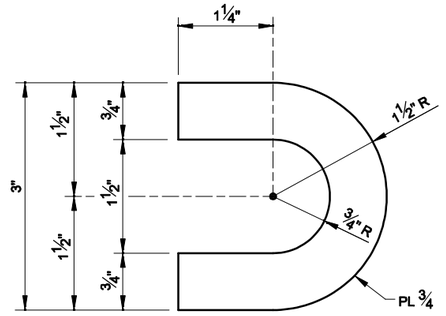

LATCHING PLATE

SCALE: 1" = 1' - 0"

REFERENCE DRAWINGS

FOR GENERAL NOTES, SEE DWG. X
FOR GATE PLAN AND PROFILE, SEE DWG. X
FOR GATE MONOLITHS MASONRY DETAILS, SEE DWGS X AND X.
FOR SEAL DETAILS, SEE DWG. X.

SCALE: 3"=1'

0 3" 6" 9" 12"

SCALE:1"=1"

0 1" 2"

US Army Corps of Engineers
NEW ORLEANS DISTRICT

MARK	DESCRIPTION	DATE	APPR.
MARK	DESCRIPTION	DATE	APPR.

DESIGNED BY: USACE - NEW ORLEANS
DWN BY:
CKD BY:
SUBMITTED BY:
DATE: MAY 2008
SOLICITATION NO.:
CONTRACT NO.:
PLOT SCALE:
PLOT DATE:
FILE NUMBER: A/E TYPICALS
SIZE: ANSI D
FILE NAME: AE-TYP12.DGN

U.S. ARMY CORPS OF ENGINEERS
NEW ORLEANS DISTRICT
NEW ORLEANS, LOUISIANA

USACE - NEW ORLEANS
HURRICANE DESIGN GUIDELINES
A/E TYPICAL DRAWINGS
~
PEDESTRIAN GATES
HINGE DETAILS
PROTECTED SIDE OPTION (2 OF 2)

SHEET IDENTIFICATION
X-00

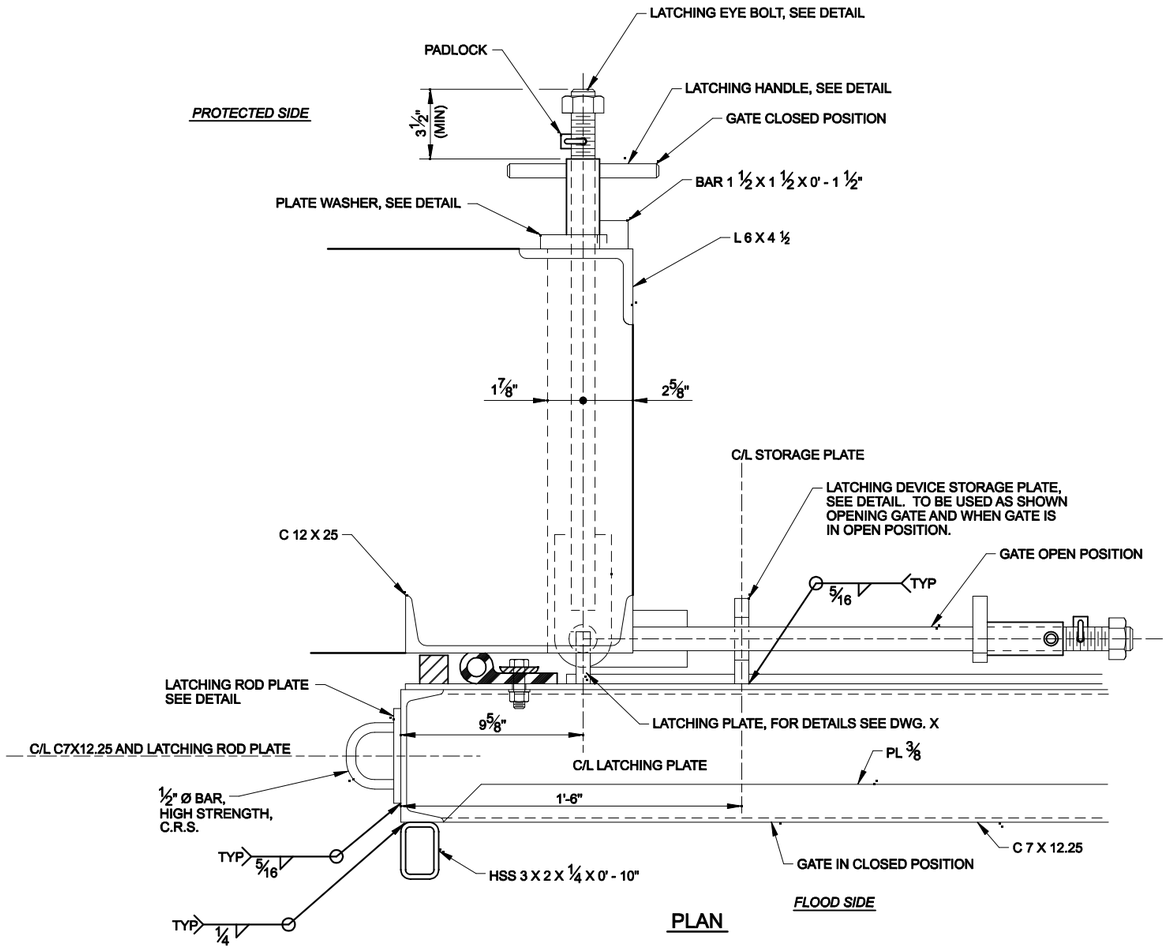

PLAN

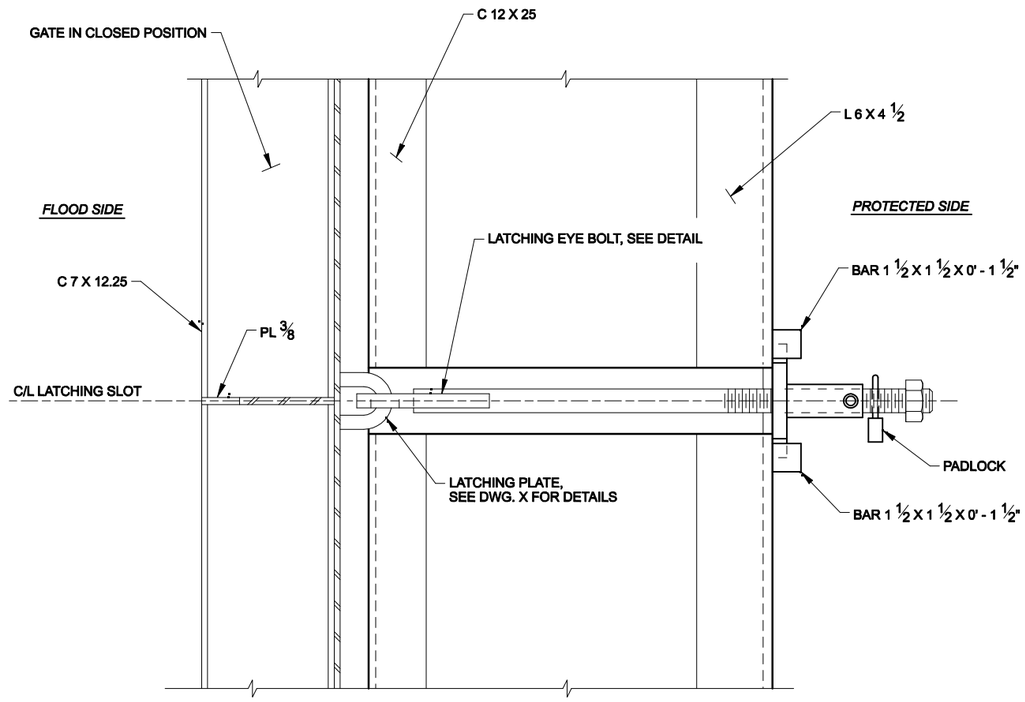

SECTION AT C/L LATCHING DEVICE

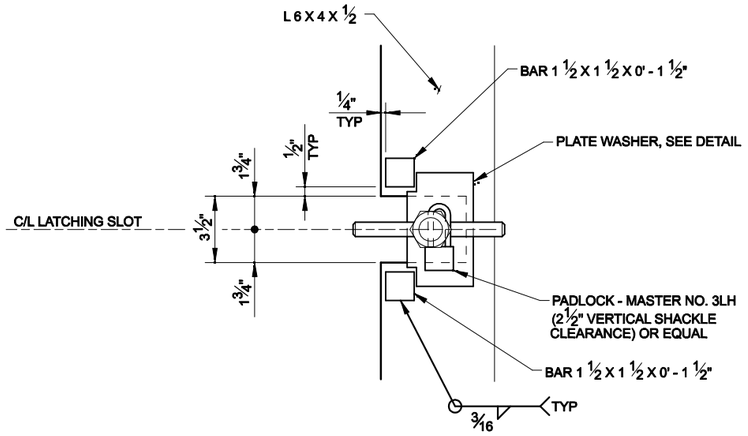

PROTECTED SIDE ELEVATION

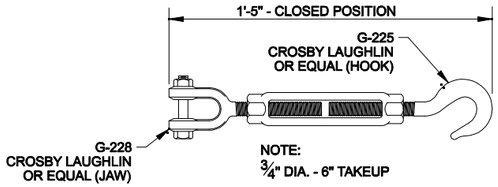

STORAGE LATCHING DEVICE

LATCHING DEVICE

REFERENCE DRAWINGS

FOR GENERAL NOTES, SEE DWG. X.
FOR GATE PLAN AND PROFILE, SEE DWG. X.
FOR GATE MONOLITHS MASONRY DETAILS, SEE DWG. X AND X.
FOR GATE DETAILS, SEE DWG. X.

SCALE: 3"=1'

0 3" 6" 9" 12"

US Army Corps of Engineers
NEW ORLEANS DISTRICT

MARK	DESCRIPTION	DATE	APPR.
MARK	DESCRIPTION	DATE	APPR.

DESIGNED BY: USACE - NEW ORLEANS
DWN BY: CKD BY:
SUBMITTED BY:
DATE: MAY 2009
SOLICITATION NO.:
CONTRACT NO.:
PLOT SCALE: PLOT DATE:
FILE NUMBER: A/E TYPICALS
SIZE: ANSI D
FILE NAME: AE-TYP2LDGN

U.S. ARMY CORPS OF ENGINEERS
NEW ORLEANS DISTRICT
NEW ORLEANS, LOUISIANA

USACE - NEW ORLEANS
HURRICANE DESIGN GUIDELINES
A/E TYPICAL DRAWINGS
~
PEDESTRIAN GATES
LATCHING DETAILS
PROTECTED SIDE OPTION (1 OF 2)

SHEET IDENTIFICATION
X-00

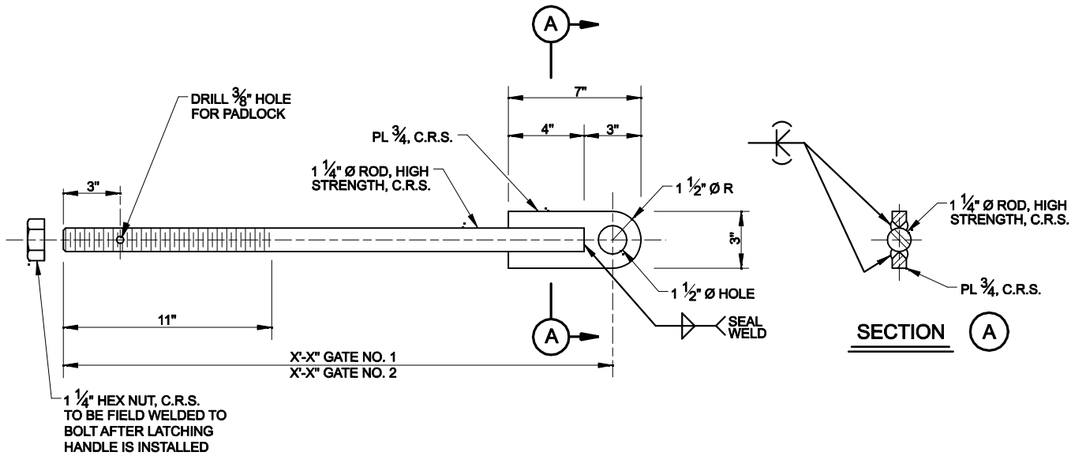

LATCHING EYE BOLT

SCALE: 3" = 1'-0"

SECTION (A)

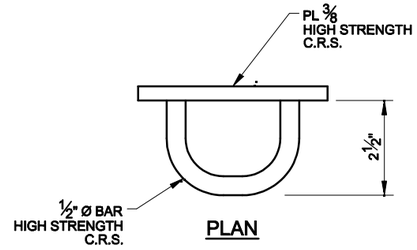

PLAN

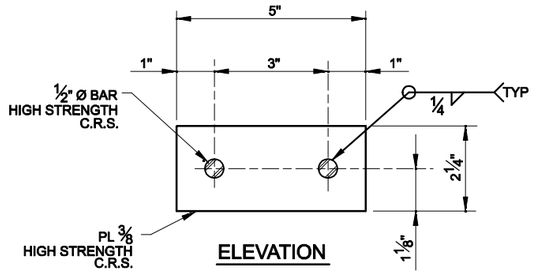

ELEVATION

LATCHING ROD PLATE

SCALE: 6" = 1'-0"

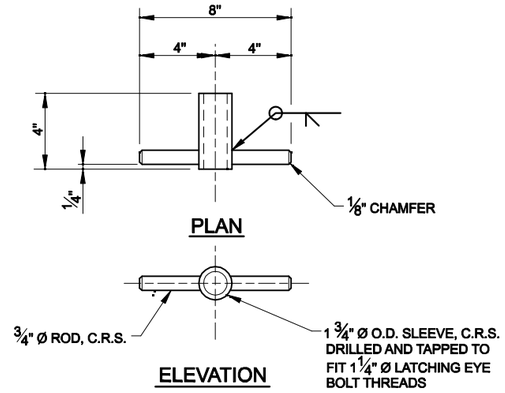

PLAN

ELEVATION

LATCHING HANDLE

SCALE: 3" = 1'-0"

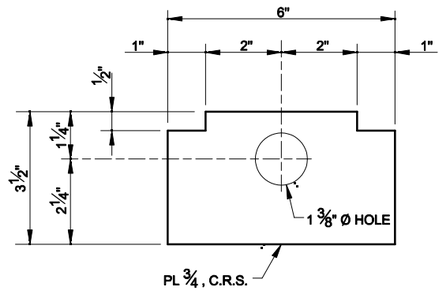

PLATE WASHER

SCALE: 6" = 1'-0"

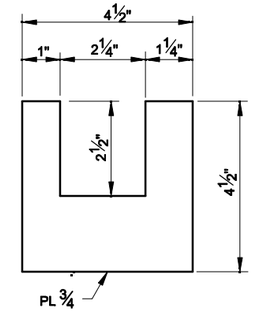

STORAGE PLATE

SCALE: 6" = 1'-0"

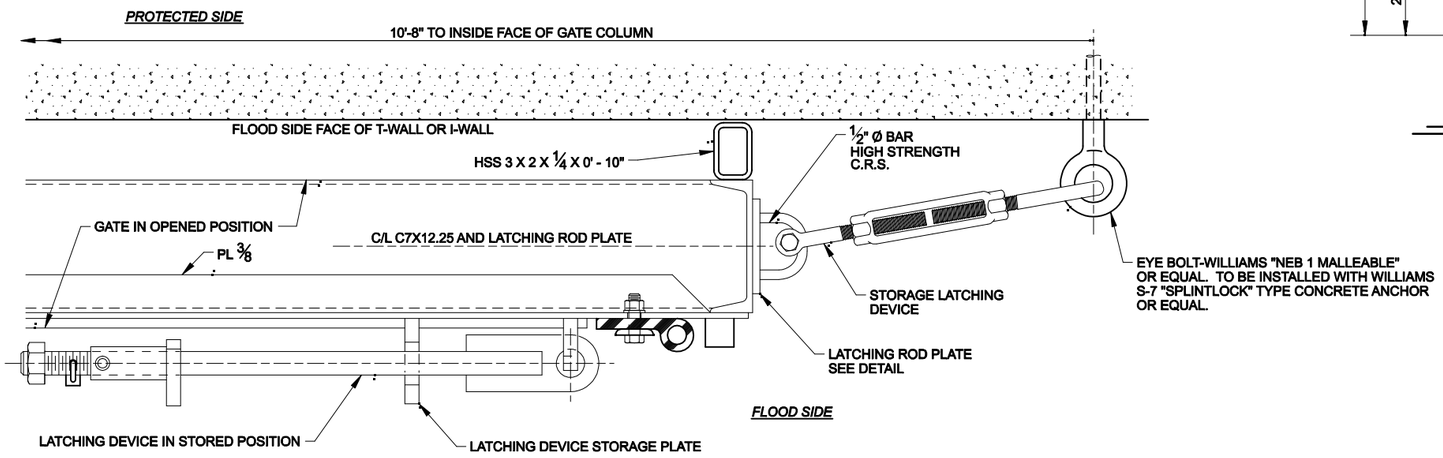

PLAN

LATCHING ARRANGEMENT IN OPEN POSITION

SCALE: 3" = 1'-0"

REFERENCE DRAWINGS

FOR GENERAL NOTES, SEE DWG. X.

FOR GATE PLAN AND PROFILE, SEE DWG. X.

FOR GATE MONOLITHS MASONRY DETAILS, SEE DWG. X AND X.

FOR GATE DETAILS, SEE DWG. X.

SCALE: 3"=1'

0 3" 6" 9" 12"

SCALE: 6"=1'

0 3" 6" 9" 12"

US Army Corps of Engineers
NEW ORLEANS DISTRICT

MARK	DESCRIPTION	DATE	APPR.

MARK	DESCRIPTION	DATE	APPR.

DESIGNED BY: USACE - NEW ORLEANS
DRWN BY:
SUBMITTED BY:
DATE: MAY 2006
CKD BY:
SIZE: ANSI D
SOLICITATION NO.:
CONTRACT NO.:
PLOT SCALE: PLOT DATE:
FILE NAME: AE-TYP72.DGN
FILE NUMBER: A/E TYPICALS

U.S. ARMY CORPS OF ENGINEERS
NEW ORLEANS DISTRICT
NEW ORLEANS, LOUISIANA

USACE - NEW ORLEANS
HURRICANE DESIGN GUIDELINES
A/E TYPICAL DRAWINGS
-
PEDESTRIAN GATES
LATCHING DETAILS
PROTECTED SIDE OPTION (2 OF 2)

SHEET IDENTIFICATION
X-00

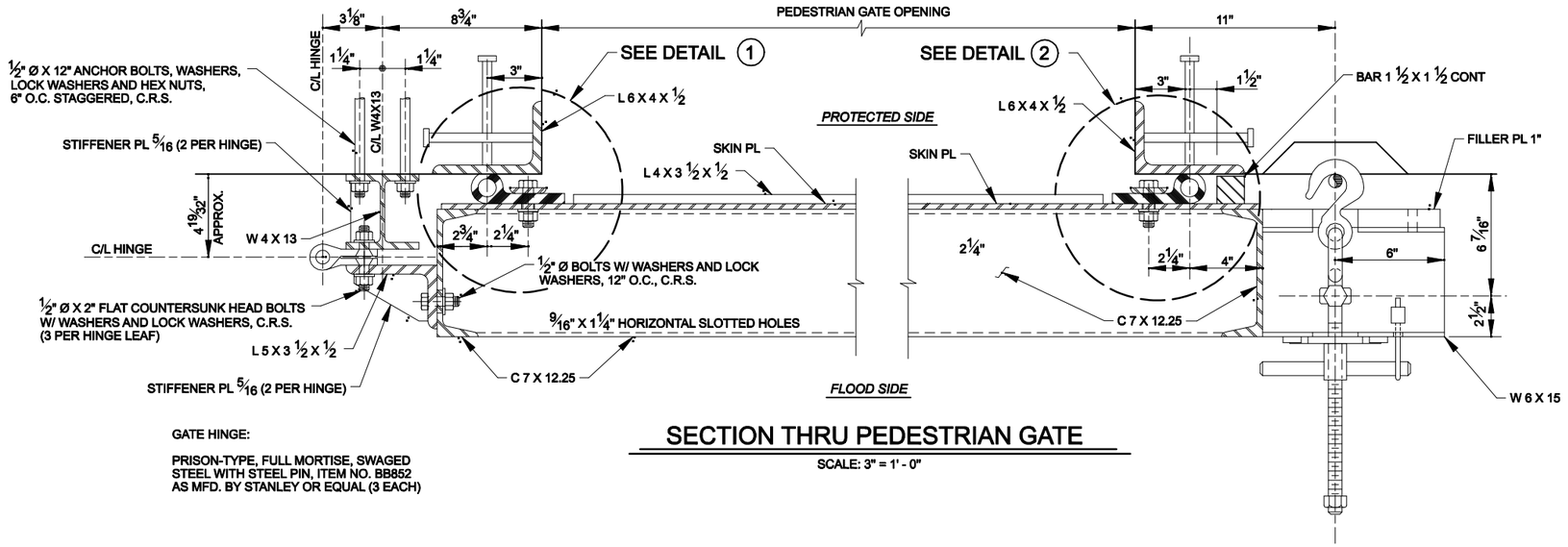

SECTION THRU PEDESTRIAN GATE

SCALE: 3" = 1' - 0"

GATE HINGE:

PRISON-TYPE, FULL MORTISE, SWAGED STEEL WITH STEEL PIN, ITEM NO. BB852 AS MFD. BY STANLEY OR EQUAL (3 EACH)

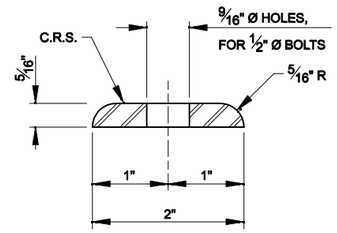

SEAL RETAINING BAR

SCALE: 1" = 1' - 0"

NOTES:

FOR GENERAL NOTES, SEE DWG. X.

ALL SPLICES WILL BE FACTORY MADE IN HEAVY STEEL PRESS TYPE MOLDS UNDER PRESSURE AND HEAT.

ALL SPLICE JOINTS MUST DEVELOP STRENGTH OF AT LEAST 50% ON THE MINIMUM TENSILE STRENGTH REQUIRED OF THE RUBBER.

SEAL CLAMP ANGLES SHALL BE PAINTED ON ALL SIDES PRIOR TO ASSEMBLY.

AFTER ASSEMBLY AND SEAL ADJUSTMENTS ARE MADE, ALL GAPS IN SEALS AND SEAL SUPPORTS SHALL BE SEALED WITH A SILICONE RUBBER SEALANT TO PROVIDE WATERTIGHT JOINTS.

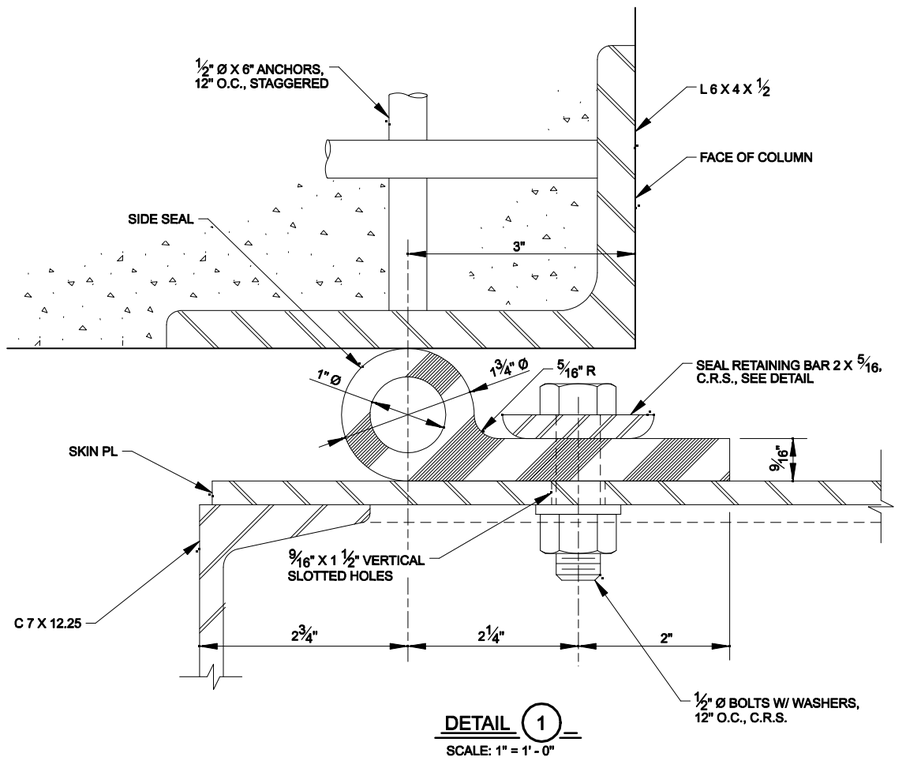

DETAIL 1

SCALE: 1" = 1' - 0"

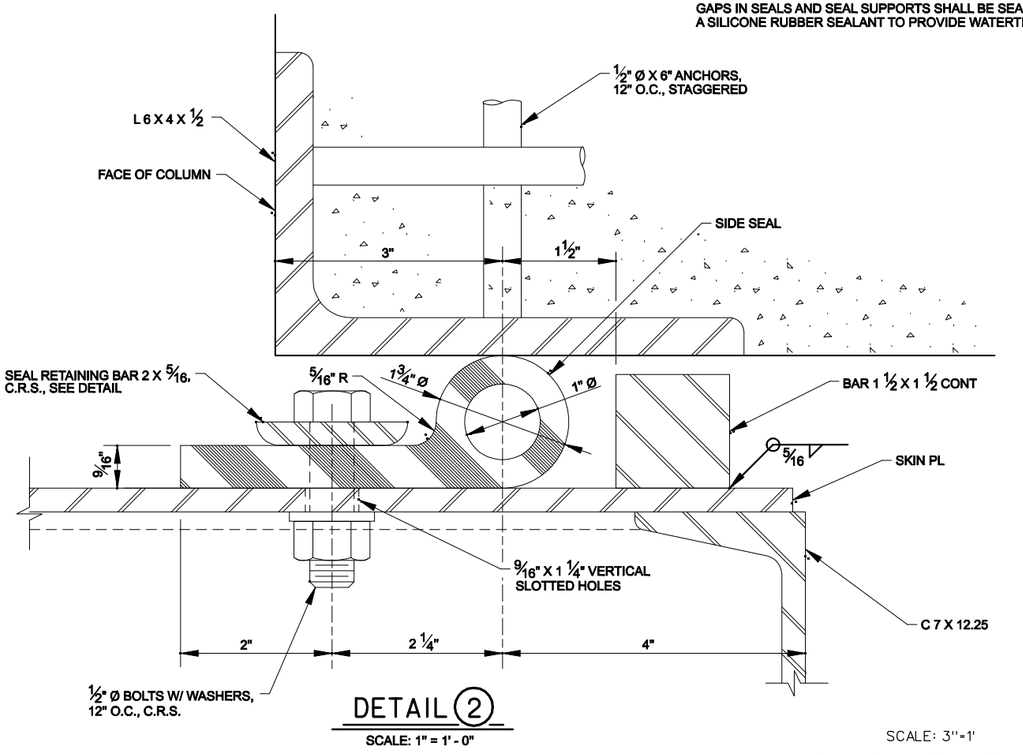

DETAIL 2

SCALE: 1" = 1' - 0"

SCALE: 3"=1'

0 3" 6" 9" 12"

SCALE: 1"=1"

0 1" 2"

US Army Corps of Engineers
NEW ORLEANS DISTRICT

MARK	DESCRIPTION	DATE	APPR.

MARK	DESCRIPTION	DATE	APPR.

U.S. ARMY CORPS OF ENGINEERS
NEW ORLEANS DISTRICT
NEW ORLEANS, LOUISIANA

DESIGNED BY: USACE - NEW ORLEANS
DWN BY:
CKD BY:
SUBMITTED BY:
DATE: MAY 2006
SOLICITATION NO.:
CONTRACT NO.:
PLOT SCALE: 1:1
PLOT DATE:
FILE NUMBER: A/E TYPICALS
SIZE: ANSI D
FILE NAME: AE-TYP7ALDGN

USACE - NEW ORLEANS
HURRICANE DESIGN GUIDELINES
A/E TYPICAL DRAWINGS
-
PEDESTRIAN GATES
SEAL DETAILS
FLOODSIDE OPTION (1 OF 2)

SHEET IDENTIFICATION
X-00

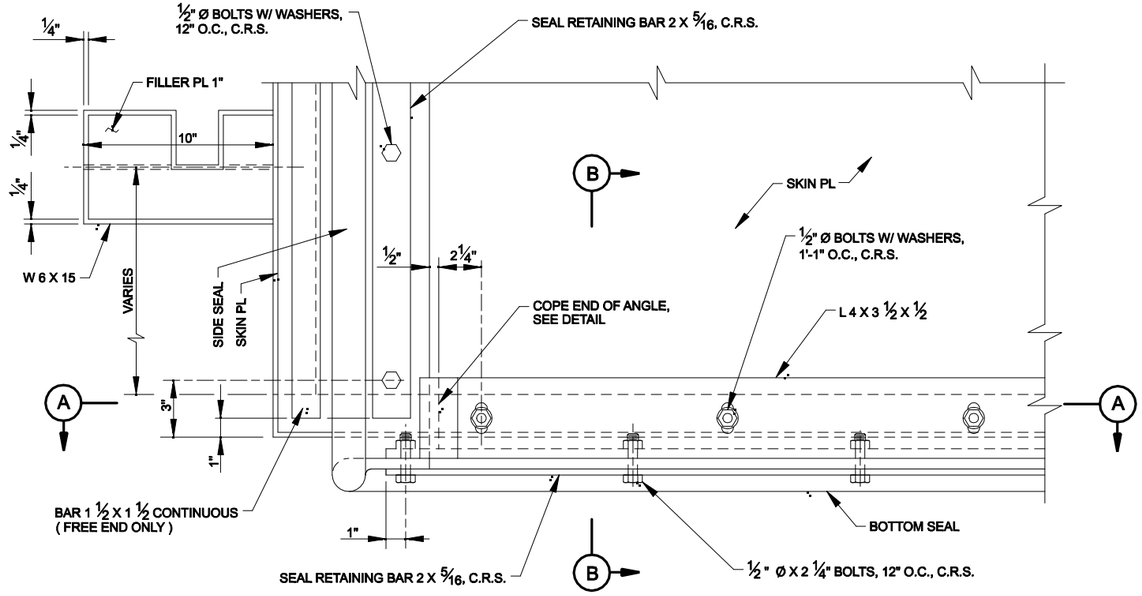

END ELEVATION - PROTECTED SIDE

SCALE: 3" = 1' - 0"

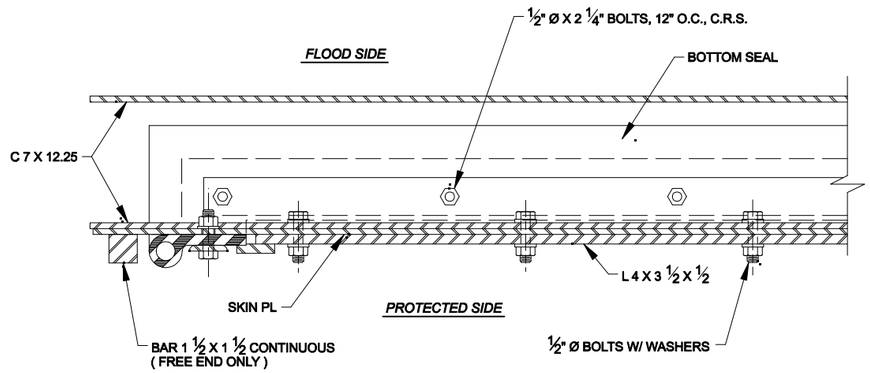

SECTION (A)

SCALE: 3" = 1' - 0"

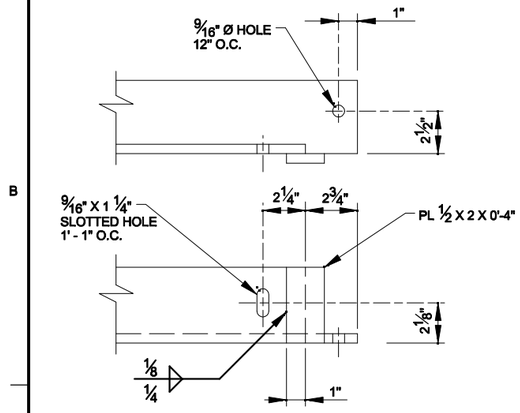

END OF L 4 X 3 1/2 X 1/2

SCALE: 3" = 1' - 0"

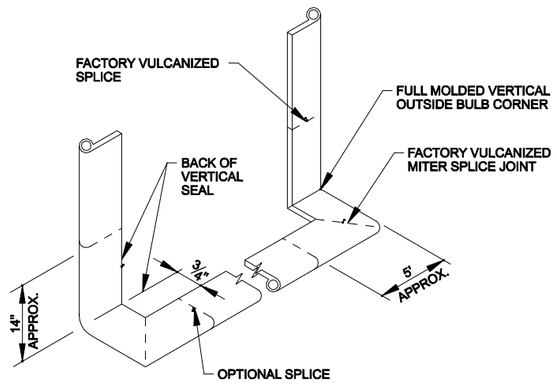

CORNER DETAIL, TYPICAL BOTH SIDES

PEDESTRIAN GATE SEAL

NOT TO SCALE

NOTES:

FOR GENERAL NOTES, SEE DWG. X.

ALL SPLICES WILL BE FACTORY MADE IN HEAVY STEEL PRESS TYPE MOLDS UNDER PRESSURE AND HEAT.

ALL SPLICE JOINTS MUST DEVELOP STRENGTH OF AT LEAST 50% ON THE MINIMUM TENSILE STRENGTH REQUIRED OF THE RUBBER.

SEAL CLAMP ANGLES SHALL BE PAINTED ON ALL SIDES PRIOR TO ASSEMBLY.

AFTER ASSEMBLY AND SEAL ADJUSTMENTS ARE MADE, ALL GAPS IN SEALS AND SEAL SUPPORTS SHALL BE SEALED WITH A SILICONE RUBBER SEALANT TO PROVIDE WATERTIGHT JOINTS.

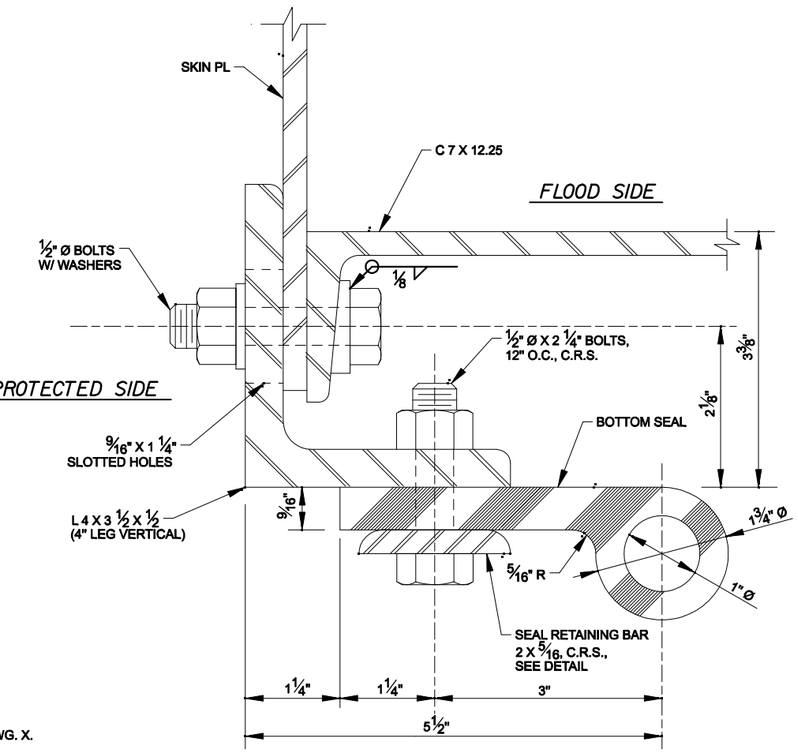

NOTE: SEAL SET FOR 1/8" DEFLECTION.

SECTION (B)

SCALE: 1" = 1' - 0"

SCALE: 3"=1'

0 3" 6" 9" 12"

SCALE:1"=1"

0 1" 2"

US Army Corps of Engineers®
NEW ORLEANS DISTRICT

MARK	DESCRIPTION	DATE	APPR.
MARK	DESCRIPTION	DATE	APPR.

DESIGNED BY: USACE - NEW ORLEANS
DRWN BY:
SUBMITTED BY:
DATE: MAY 2008
CKD BY:
SOLICITATION NO.:
CONTRACT NO.:
PLOT SCALE: 1=1
PLOT DATE:
FILE NUMBER: A/E TYPICALS
SIZE: ANSI D
FILE NAME: AE-TYPFLDGN

U.S. ARMY CORPS OF ENGINEERS
NEW ORLEANS DISTRICT
NEW ORLEANS, LOUISIANA

USACE - NEW ORLEANS
HURRICANE DESIGN GUIDELINES
A/E TYPICAL DRAWINGS

PEDESTRIAN GATES
SEAL DETAILS
FLOODSIDE OPTION (2 OF 2)

SHEET IDENTIFICATION
X-00

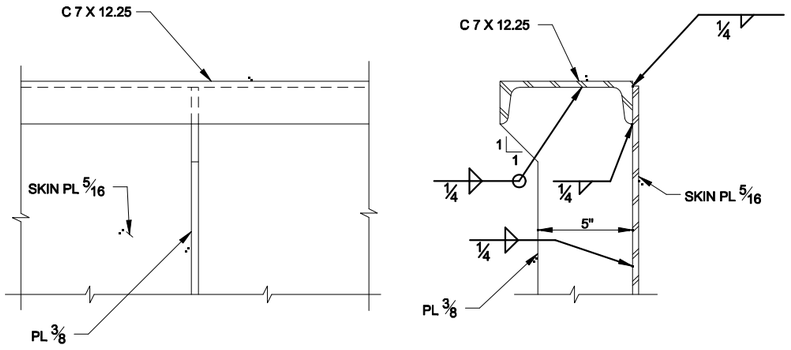

DETAIL 1/XX

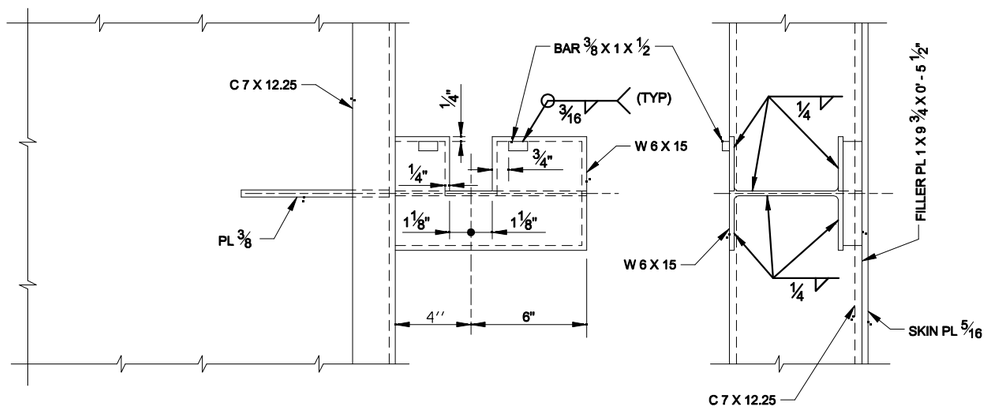

PROTECTED SIDE

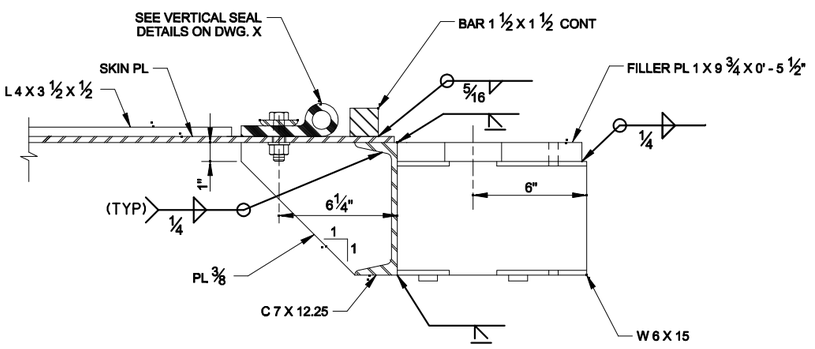

FLOOD SIDE

DETAIL 3/XX

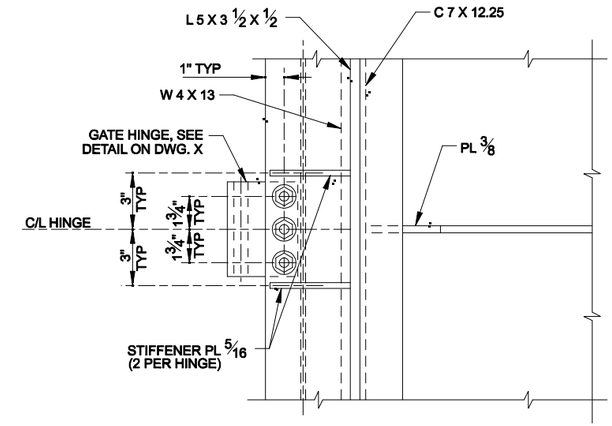

PROTECTED SIDE

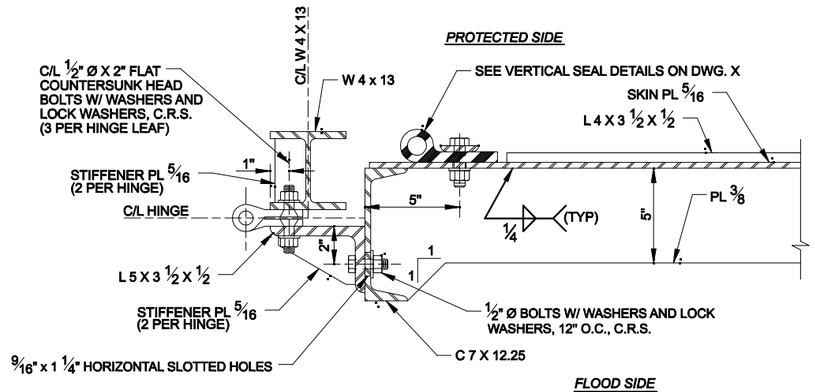

FLOOD SIDE

DETAIL 2/XX

REFERENCE DRAWINGS

FOR GENERAL NOTES, SEE DWG. X.
FOR PLAN AND PROFILE, SEE DWGS. X, X, AND X.
FOR TYPICAL WALL SECTIONS, SEE DWG. X.
FOR GATE MONOLITH MASONRY DETAILS, SEE DWG. X.
FOR SEAL DETAILS, SEE DWG. X.
FOR MISCELLANEOUS DETAILS, SEE DWG. X.

SCALE: 3"=1'

0 3" 6" 9" 12"

US Army Corps of Engineers®
NEW ORLEANS DISTRICT

MARK	DESCRIPTION	DATE	APPR.
MARK	DESCRIPTION	DATE	APPR.

U.S. ARMY CORPS OF ENGINEERS
NEW ORLEANS DISTRICT
NEW ORLEANS, LOUISIANA

DESIGNED BY: USACE - NEW ORLEANS
DWN BY:
CKD BY:
SUBMITTED BY:
DATE: MAY 2008
SOLICITATION NO.:
CONTRACT NO.:
PLOT SCALE: 1'-0" = 1'-0"
PLOT DATE:
FILE NUMBER: A/E TYPICALS
SIZE: ANSI D
FILE NAME: AE-TYPFLDGN

USACE - NEW ORLEANS
HURRICANE DESIGN GUIDELINES
A/E TYPICAL DRAWINGS
-
PEDESTRIAN GATES
HINGE DETAILS
FLOODSIDE OPTION (1 OF 2)

SHEET IDENTIFICATION
X-00

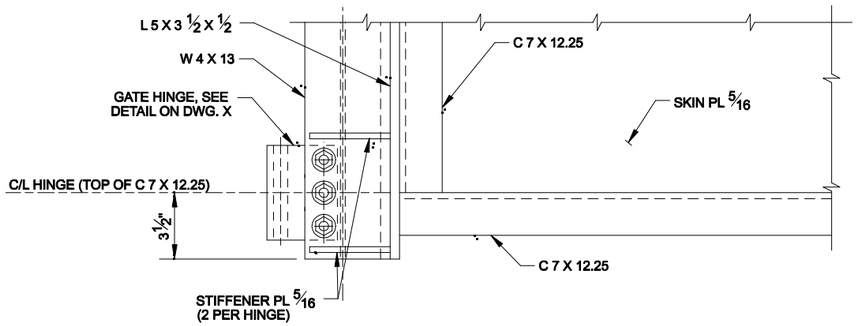

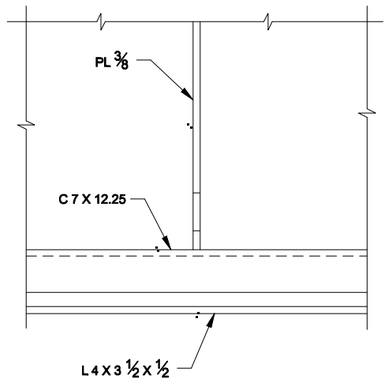

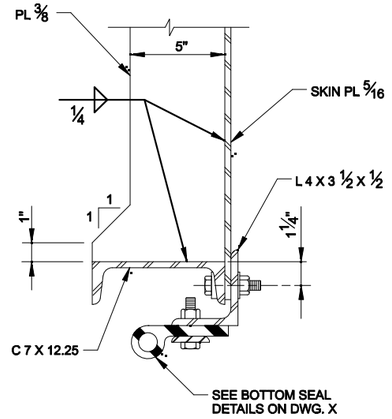

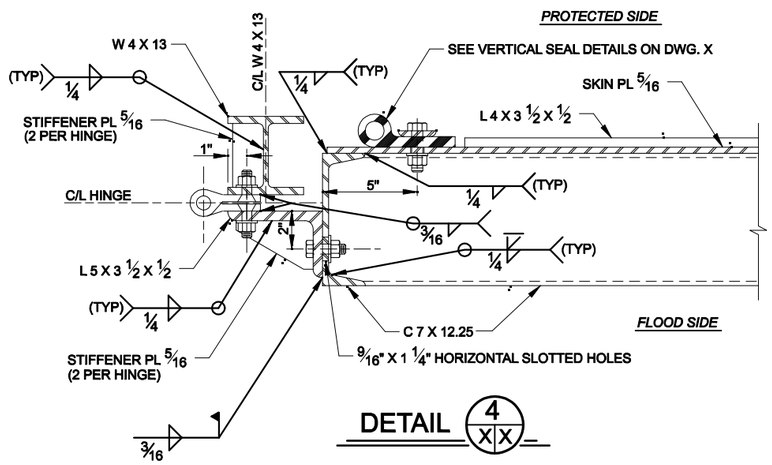

DETAIL 4/XX

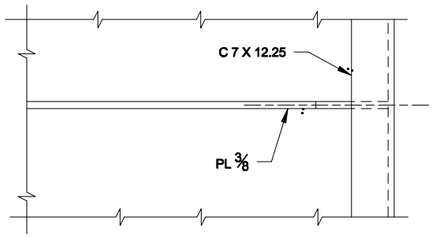

NOTE:
SEAL ASSEMBLY SHOWN IN SOME VIEWS FOR ORIENTATION ONLY.

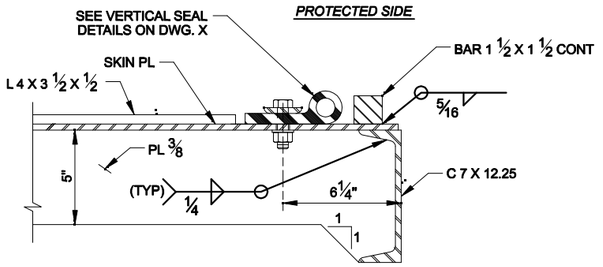

DETAIL X/XX

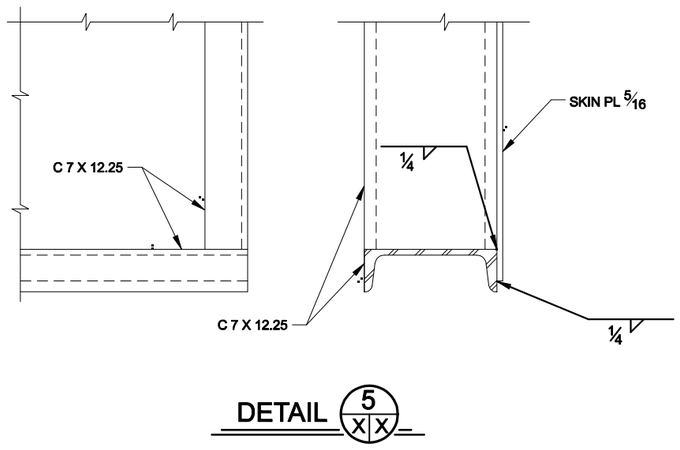

DETAIL 5/XX

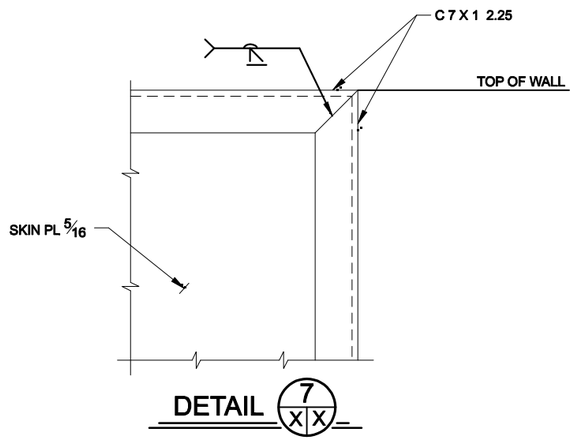

DETAIL 7/XX

REFERENCE DRAWINGS

FOR GENERAL NOTES, SEE DWG. X.
FOR PLAN AND PROFILE, SEE DWGS. X, X, AND X.
FOR TYPICAL WALL SECTIONS, SEE DWG. X.
FOR GATE MONOLITH MASONRY DETAILS, SEE DWG. X.
FOR SEAL DETAILS, SEE DWG. X.
FOR MISCELLANEOUS DETAILS, SEE DWG. X.

SCALE: 3"=1'
0 3" 6" 9" 12"

US Army Corps of Engineers
NEW ORLEANS DISTRICT

MARK	DESCRIPTION	DATE	APPR.

MARK	DESCRIPTION	DATE	APPR.

U.S. ARMY CORPS OF ENGINEERS
NEW ORLEANS DISTRICT
NEW ORLEANS, LOUISIANA

DESIGNED BY: USACE - NEW ORLEANS
DWN BY:
CKD BY:
SUBMITTED BY:
PLOT SCALE:
PLOT DATE:
SIZE: ANSI D
FILE NAME: AE-TYP7LDGN
DATE: MAY 2009
SOLICITATION NO.:
CONTRACT NO.:
FILE NUMBER: A/E TYPICALS

USACE - NEW ORLEANS
HURRICANE DESIGN GUIDELINES
A/E TYPICAL DRAWINGS
-
PEDESTRIAN GATES
HINGE DETAILS
FLOODSIDE OPTION (2 OF 2)

SHEET IDENTIFICATION
X-00

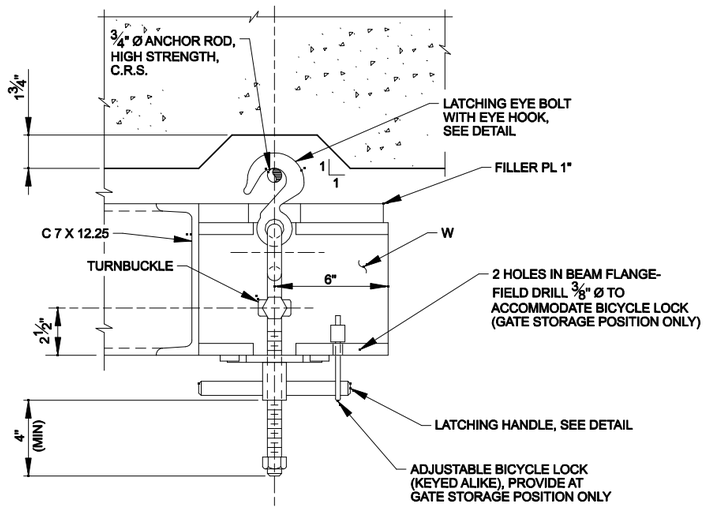

PLAN

SCALE: 3" = 1' - 0"

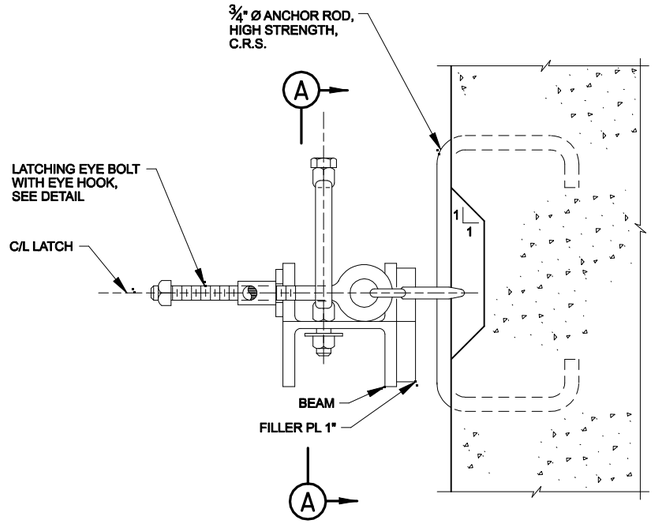

SECTION AT C/L OF LATCHING DEVICE

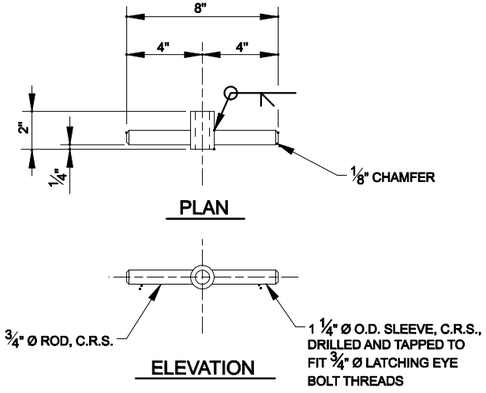

LATCHING HANDLE

SCALE: 3" = 1' - 0"

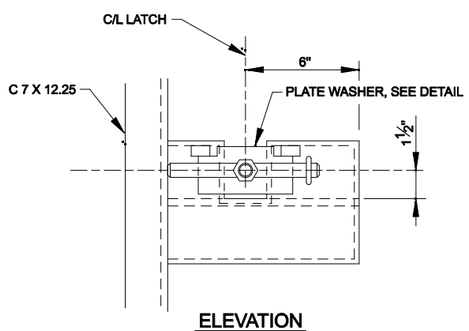

ELEVATION

SCALE: 6" = 1' - 0"

DETAIL (1)

LATCHING DEVICE

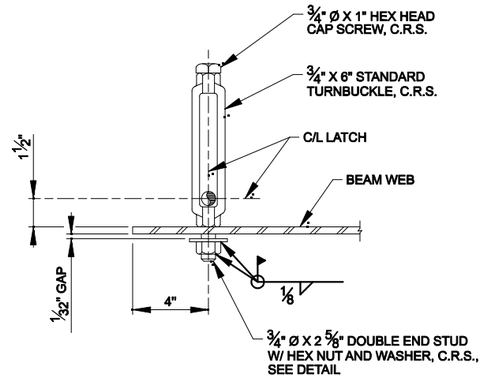

SECTION (A)

SCALE: 3" = 1' - 0"

REFERENCE DRAWINGS

FOR GENERAL NOTES, SEE DWG. X.

FOR PLAN AND PROFILE, SEE DWGS. X, X, AND X.

FOR TYPICAL WALL SECTIONS, SEE DWG. X.

FOR GATE MONOLITH MASONRY DETAILS, SEE DWG. X.

FOR MISCELLANEOUS DETAILS, SEE DWG. X.

SCALE: 3"=1'

0 3" 6" 9" 12"

SCALE: 6"=1'

0 3" 6" 9" 12"

US Army Corps of Engineers®
NEW ORLEANS DISTRICT

MARK	DESCRIPTION	DATE	APPR.

MARK	DESCRIPTION	DATE	APPR.

U.S. ARMY CORPS OF ENGINEERS
NEW ORLEANS DISTRICT
NEW ORLEANS, LOUISIANA

DESIGNED BY: USACE - NEW ORLEANS
DWN BY:
CKD BY:
SUBMITTED BY:
PLOT SCALE: 1" = 1'
PLOT DATE:
SIZE: ANSI D
DATE: MAY 2008
SOLICITATION NO.:
CONTRACT NO.:
FILE NUMBER: A/E TYPICALS
FILE NAME: AE-TYPFLDGN

USACE - NEW ORLEANS
HURRICANE DESIGN GUIDELINES
A/E TYPICAL DRAWINGS

PEDESTRIAN GATES
LATCHING DETAILS
FLOODSIDE OPTION (1 OF 2)

SHEET IDENTIFICATION
X-00

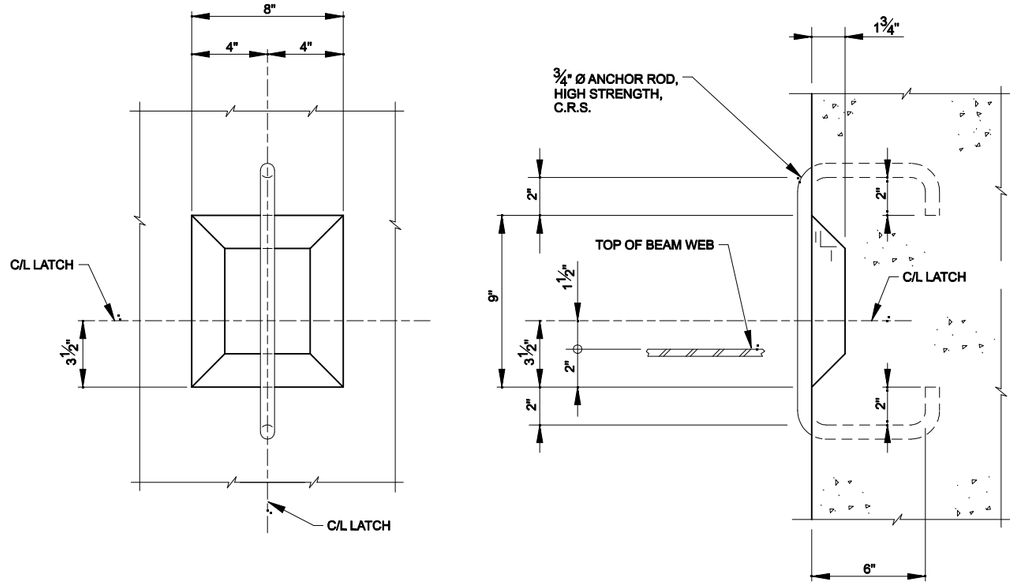

DETAIL (2)

SCALE: 3" = 1' - 0"

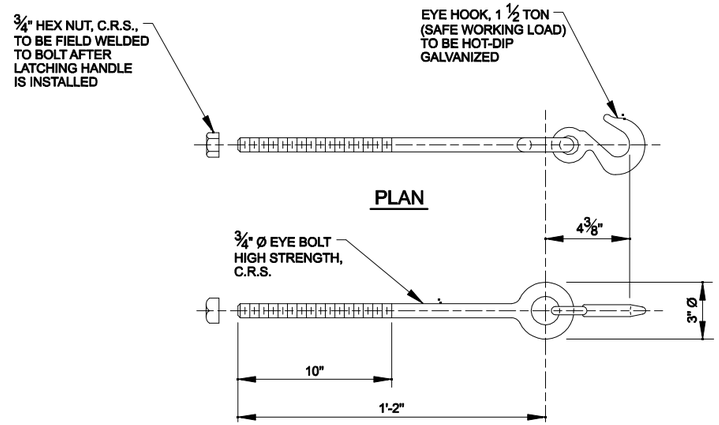

ELEVATION

LATCHING EYE BOLT WITH EYE HOOK

SCALE: 3" = 1' - 0"

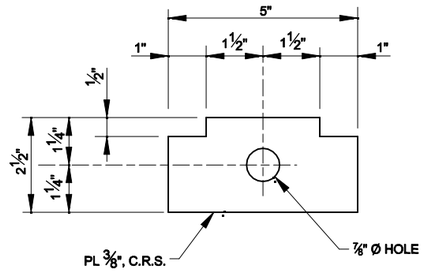

PLATE WASHER

SCALE: 6" = 1' - 0"

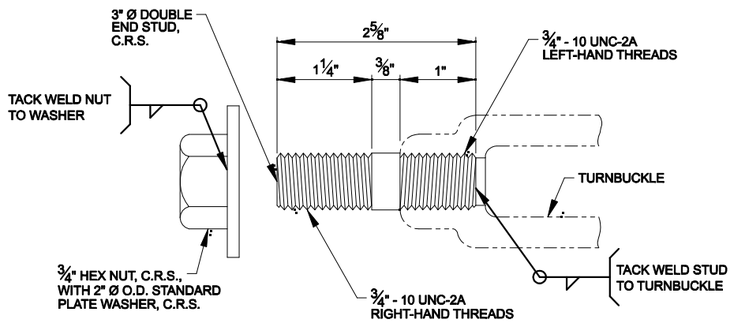

DOUBLE END STUD

SCALE: 12" = 1' - 0"

REFERENCE DRAWINGS

FOR GENERAL NOTES, SEE DWG. X.
FOR PLAN AND PROFILE, SEE DWGS. X, X, AND X.
FOR TYPICAL WALL SECTIONS, SEE DWG. X.
FOR GATE MONOLITH MASONRY DETAILS, SEE DWG. X.
FOR MISCELLANEOUS DETAILS, SEE DWG. X.

SCALE: 3"=1'
0 3" 6" 9" 12"

SCALE:1"=1'
0 1" 2"

US Army Corps of Engineers®
NEW ORLEANS DISTRICT

MARK	DESCRIPTION	DATE	APPR.
MARK	DESCRIPTION	DATE	APPR.

DESIGNED BY: USACE - NEW ORLEANS
DWN BY:
CKD BY:
SUBMITTED BY:
DATE: MAY 2006
SOLICITATION NO.:
CONTRACT NO.:
PLOT SCALE: 1:1
PLOT DATE:
SIZE: ANSI D
FILE NAME: AE-TYPFLDSN
FILE NUMBER: A/E TYPICALS

U.S. ARMY CORPS OF ENGINEERS
NEW ORLEANS DISTRICT
NEW ORLEANS, LOUISIANA

USACE - NEW ORLEANS
HURRICANE DESIGN GUIDELINES
A/E TYPICAL DRAWINGS
-
PEDESTRIAN GATES
LATCHING DETAILS
FLOODSIDE OPTION (2 OF 2)

SHEET IDENTIFICATION
X-00

13.0 SPECIFICATIONS

13.1 Sampling of References

- ER 1110-1-8155, Engineering and Design Specifications
- ER 1110-2-1200, Plans and Specifications for Civil Works Projects

13.2 In General

Specification preparation shall follow ECB 2006-4, dated 08JUN06, which mandates CSI MasterFormat 2004. MVN Guide Specifications are available for download from Design Guidelines page on the MVN Engineering Division web site at http://www.mvn.usace.army.mil/eng. These can be used as reference in compiling project specifications using MasterFormat 2004. Certain contracts may require MasterFormat 1995 to comply with prior agreements.

Specifications shall be prepared using the government's SpecsIntact system. SpecsIntact (Specifications-Kept-Intact), a software program copyrighted by NASA, is mandated for use in producing USACE project specifications. The program is available for free download at http://specsintact.ksc.nasa.gov/Index.asp. The SpecsIntact web page includes instructions and online help for use of the program.

UPDATED 04 OCT 07

APPENDIXES

A. LIST OF ACRONYMS

ACES	Automated Coastal Engineering System numerical model
ACI	American Concrete Institute
ADCIRC	ADvanced CIRCulation Multi-dimensional Hydrodynamic Model
A-E	Architect-Engineer consultant
AISC	American Institute of Steel Construction
ASCE	American Society of Civil Engineers
ASD	Allowable Stress Design
ASTM	American Society for Testing and Materials
AWS	American Welding Society
AWSE	Authorized Water Surface Elevation
BCOE	Bidability, Constructability, Operability, and Environmental Review
CADD	Computer Assisted Drafting and Design
CEDAS	Coastal Engineering Design and Analysis System
CEM	Coastal Engineering Manual, EM1110-2-1100
CFR	Code of Federal Regulations
C-Frame	Structural Analysis software
CGSI	Strength Analysis of Concrete Structural Elements software
CHAMP	Coastal Hazard Analysis Modeling Program
CIH	Certified Industrial Hygienist
CONUS	Continental United States
COR	Contracting Officer's Representative
CPGA	Pile Group Analysis software
CPT	Cone Penetration Test
CSP	Certified Safety Professional
CWALSHT	Sheet Pile Wall Design/Analysis software
DFAR	Defense Federal Acquisition Regulations
DTM	Digital Terrain Model
DWSE	Design Water Surface Elevation
ERDC	Engineer Research and Development Center
EST	Empirical Simulation Technique
ETL	Engineering Technical Letter
FDA	Flood Damage Assessment numerical model
FEMA	Federal Emergency Management Agency
FOA	Field Operating Activity
FOS	Factor of Safety
GIWW	Gulf Intracoastal Water Way Navigational Channel Project
HPO	Hurricane Protection Office at MVN
HTRW	Hazardous, Toxic, and Radioactive Waste
HURDAT	HURricane DATabase
IH	Industrial Hygienist
IHNC	Inner Harbor Navigational Channel, LA, Project
IPET	Interagency Performance Evaluation Taskforce
ITR	Independent Technical Review

JPM-OS	Joint Probability Method-Optimal Selection
LACPR	Louisiana Coastal Protection and Restoration Study
LADOTD	Louisiana Department of Transportation and Development
LCA	Louisiana Coastal Area, LA, Ecosystem Restoration Study
LIDAR	Laser Detection and Ranging
LPV	Lake Pontchartrain, LA & Vicinity Hurricane Protection Project
LRFD	Load and Resistance Factor Design
MRGO	Mississippi River Gulf Outlet, LA, Navigational Channel Project
MRL	Mississippi River Levees
MRT	Mississippi River & Tributaries Project
MTC	Materials Testing Center at ERDC
MVN	USACE New Orleans District
NAVD 88	North American Vertical Datum
NDT	Non-Destructive Testing
NEPA	National Environmental Policy Act, 1969
NFPA	National Fire Protection Association
NGS	National Geodetic Survey agency
NGVD29	National Geodetic Vertical Datum
NOAA	National Oceanic and Atmospheric Administration
NOV	New Orleans to Venice, LA, Hurricane Protection Project
P&S	Plans and Specifications
PBL	Planetary Boundary Layer
PDA	Pile Dynamic Analysis
PDT	Product Delivery Team
POC	Point of Contact
PPC	Precast Prestressed Concrete
PRO	Protection and Restoration Office at MVN
ROE	Right of Entry
ROW	Right-of-Way
SPH	Standard Project Hurricane synthetic design storm
SSPC	Steel Structures Painting Council
STAAD	Structural Analysis and Design software
STWAVE	Steady State Irregular WAVE numerical model
SWAN	Simulating WAves Nearshore numerical model
SWL	Still Water Level
TFG	Task Force Guardian at MVN
TFH	Task Force Hope at MVN
TR4	Technical Report No. 4, “Shore Protection, Planning and Design,” Third Edition, 1966, Coastal Engineering Research Center, USACE
TRM	Turf Reinforcement Mats
TRS	Temporary Retaining Structure
UCT	Unconfined Compression Test
USACE	US Army Corps of Engineers
WAM	Water Availability Models

WBV	West Bank & Vicinity, New Orleans, LA Hurricane Protection Project

B. LINKS TO REFERENCES

US Army Corps of Engineers, engineering regulations, circulars, manuals, and other documents originating from HQUSACE
http://www.usace.army.mil/publications/

Coastal and Hydraulics Laboratory, Engineer Research and Development Center, Waterways Experiment Station, Vicksburg, Mississippi
http://chl.erdc.usace.army.mil/chl.aspx?p=Publications

Technical Report: Erosion Resistance of Grassland as Dike Covering, Technical Advisory Committee for Flood Defence in The Netherlands (TAW), Delft, Version 26 November 1997
http://www.tawinfo.nl/engels/downloads/TRGrasslandDikeCoverige.pdf

Defense Federal Acquisition Regulation, Office of the Under Secretary for Acquisition Technology and Logistics, Defense Procurement and Acquisition Policy
http://www.acq.osd.mil/dpap/

LADOTD Standard Specifications for Roads and Bridges, Louisiana Department of Transportation and Development
http://www.dotd.louisiana.gov/

SpecsIntact, Software and Instructions, NASA
http://specsintact.ksc.nasa.gov/

ECB 2006-4, Unified Facilities Guide Specifications Transition to Construction Specifications Institute MasterFormat 2004, USACE Directorate of Civil Works
http://www.wbdg.org/ccb/ARMYCOE/COEECB/ecb_2006_4.pdf

NFPA 37: Standard for the Installation and Use of Stationary Combustion Engines and Gas Turbines, National Fire Protection Association
http://www.nfpa.org

MVD CAD Resources
http://www.mvd.usace.army.mil/cad/

C. SAMPLE SCOUR PROTECTION DETAILS

Some sample details utilized by TFG are shown on the following plates. These drawings show work typical to date, however, future ERDC and IPET reports shall be used for guidance.

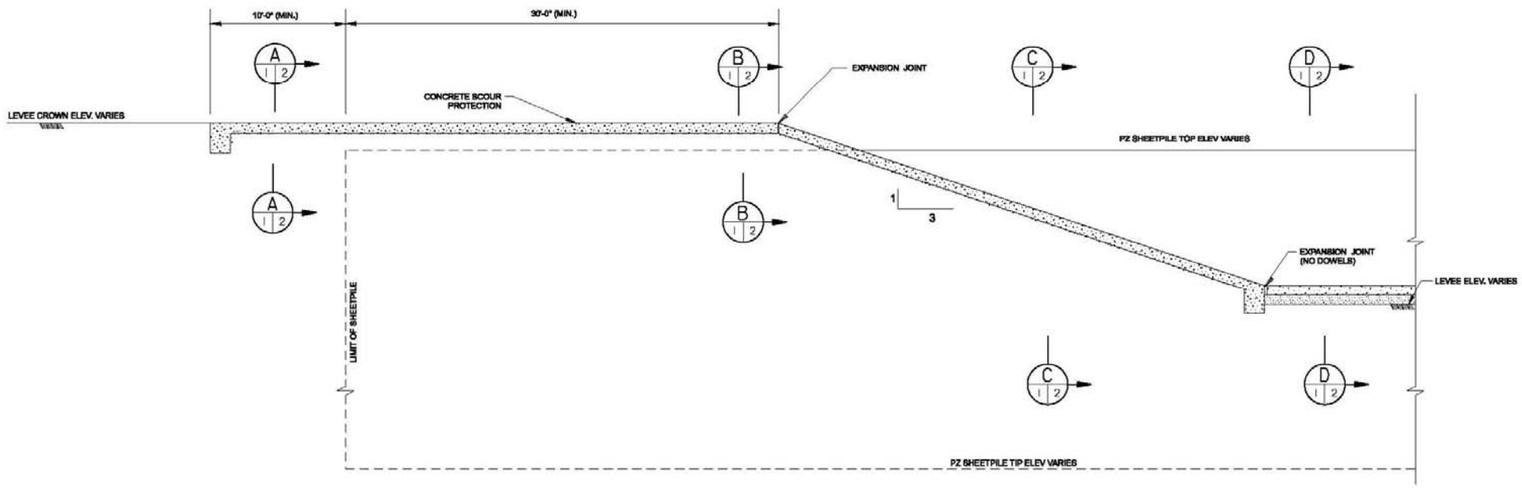

FLOODWALL SCOUR PROTECTION AND LEVEE TIE-IN
CASE 1

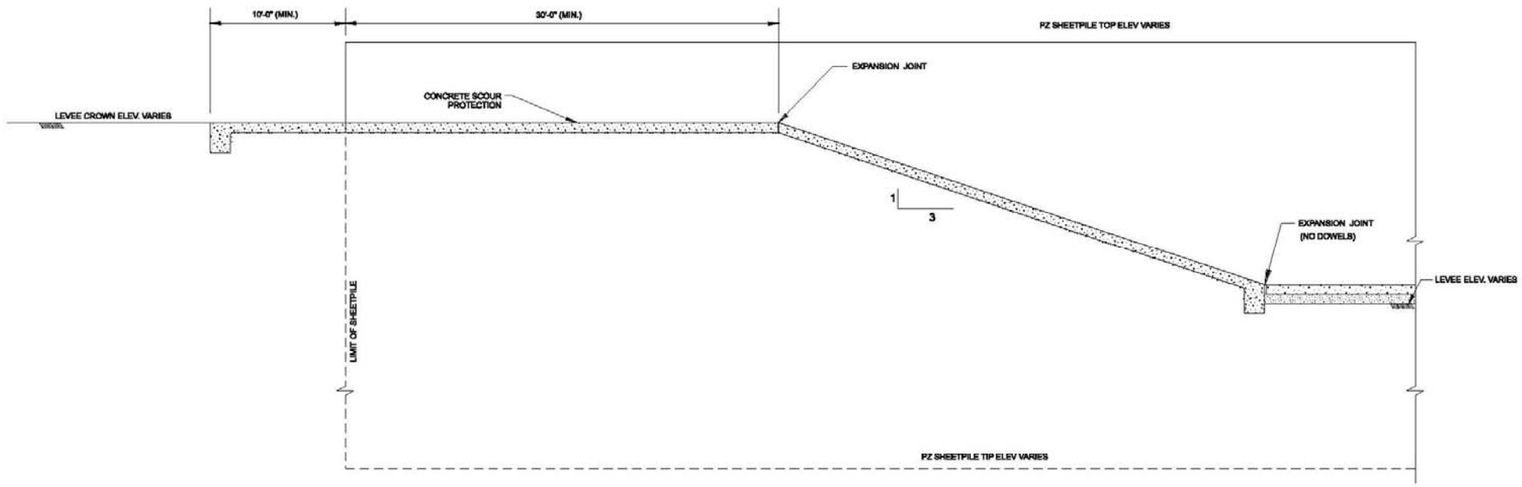

FLOODWALL SCOUR PROTECTION AND LEVEE TIE-IN
CASE 2

U. S. ARMY ENGINEER DISTRICT, NEW ORLEANS
CORPS OF ENGINEERS
NEW ORLEANS, LOUISIANA

SCOUR PROTECTION DETAILS
SHEET PILE TO LEVEE TIE-IN

FILE NUMBER
DWG. 1 OF 2

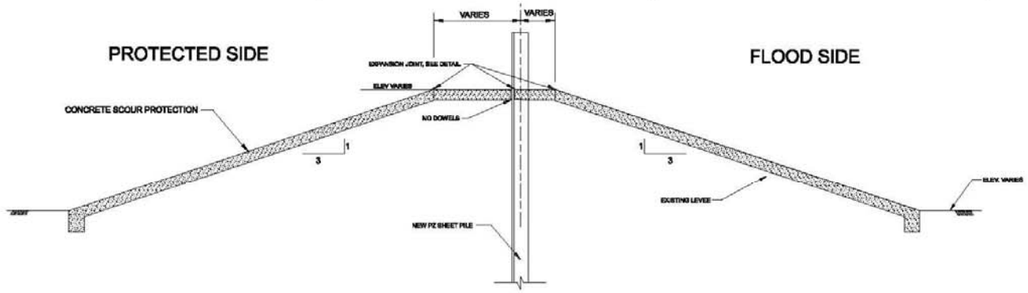

SECTION C

PROPER DESIGN OF SCOUR PROTECTION SHALL INCLUDED UP TO DATE GUIDANCE FROM ERDC

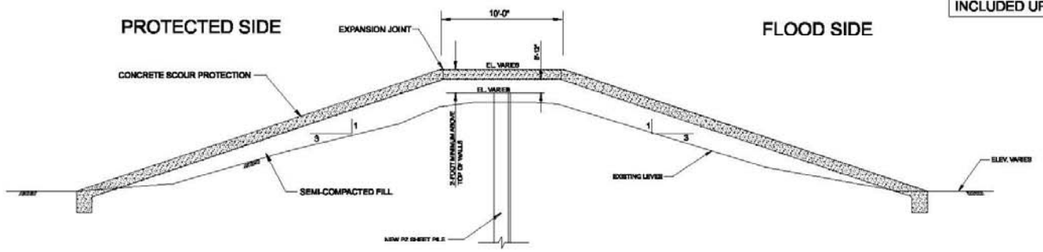

SECTION B

SETTLEMENT EXPECTATION SHALL BE CONSIDERED WHILE DESIGNING SCOUR PROTECTION

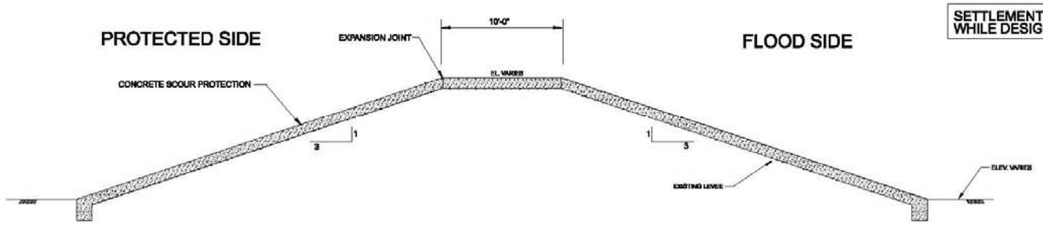

SECTION A

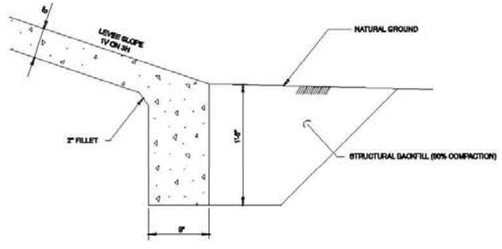

TYPICAL CONCRETE KEYS FOR 6" SCOUR PROTECTION

NOT TO SCALE

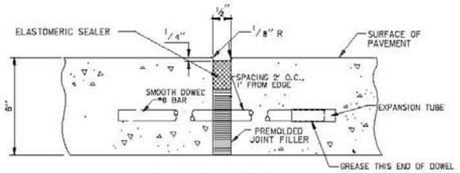

EXPANSION JOINT

NOT TO SCALE

NOTES:
1. CONTRACTION JOINTS SHALL BE SPACED 10 FT O.C. CONCITUDINAL AND LATERAL FOR ALL CONCRETE SLABS.
2. TRANSVERSE EXPANSION JOINTS AT 30' SPACING. COINCIDENT WITH SHEET PILE INTERLOCK OR WALL EXP. JT. SEE EXPANSION JOINT DETAIL
3. NO REINFORCING STEEL OR DOWELS SHALL BE USED FOR ANY TEMPORARY WORK.
4. TEMPERATURE STEEL AND DOWELS SHALL BE INCLUDED FOR ANY PERMANENT WORK.
5. REINFORCING STEEL, BEDDING MATERIAL AND GEOTEXTILE SHALL ONLY BE USED WHEN EXPECTING VEHICLE LOADS.
6. FOR TEMPORARY WORK, 30# FELT PAPER MAY BE USED AS A BOND BREAKER WITH WALL.

PROTECTED SIDE

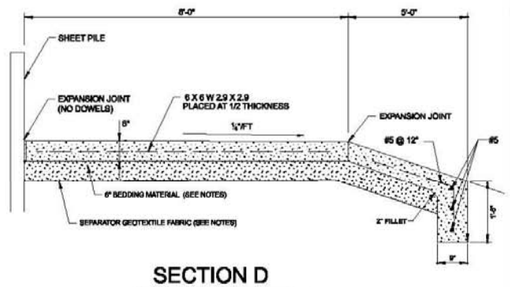

SECTION D

EROSION PAD

NOT TO SCALE

U. S. ARMY ENGINEER DISTRICT, NEW ORLEANS
CORPS OF ENGINEERS
NEW ORLEANS, LOUISIANA

XXX
XXX
XXX
HURRICANE PROTECTION

EROSION PAD, SCOUR PROTECTION DETAILS

FILE NUMBER

DWG. 2 OF 2

GENERAL NOTES AND GUIDANCE FOR FLOODWALL SCOUR PROTECTION AND LEVEE TIE-IN

THIS GUIDANCE IS THE MINIMUM REQUIREMENTS NECESSARY.
SITE SPECIFIC FACTORS,MUST BE INVESTIGATED TO ACCOUNT FOR GEOTECHNICAL, HYDRAULIC, AND MAINTENANCE VARIANCES.

1. FLOODWALL OVERTOPPING CONCRETE SCOUR PROTECTION:

   A. LIMITS OF SCOUR PROTECTION ON THE PROTECTED SIDE OF I-WALLS:
      MINIMUM OF 8 FEET OF TOTAL SCOUR PROTECTION
      MINIMUM OF 5 FEET DOWN SLOPING EMBANKMENTS

   B. CONCRETE PAVEMENT WITH VEHICULAR TRAFFIC (1/2 TON TRUCKS, CARS):
      6-7 INCHES LIGHTLY REINFORCED CONCRETE
      6 INCH BEDDING
      SEPARATOR GEOTEXTILE FABRIC BETWEEN BEDDING AND SOIL
      PROPER DESIGN AND LAYOUT OF EXPANSION, AND CONTROL JOINTS ARE NECESSARY FOR DIFFERENTIAL MOVEMENT

   C. CONCRETE PAVEMENT NO WITH VEHICULAR TRAFFIC:
      5-6 INCHES LIGHTLY REINFORCED CONCRETE, BEDDING AND GEOTEXTILE ARE OPTIONAL
      ENGINEERING JUDGMENT, PROPER DESIGN AND LAYOUT OF EXPANSION, AND CONTROL JOINTS ARE NECESSARY FOR DIFFERENTIAL MOVEMENT.

   D. CONCRETE KEYS:
      PROPER LOCATION OF THE CONCRETE KEYS NEEDS TO BE CONSIDERED TO PREVENT SLIDING AND POTENTIAL PIPING UNDER THE PAVEMENT.

   E. SCOUR PROTECTION MATERIALS:
      OPTIONAL MATERIALS SHOULD BE INVESTIGATED FOR SITE SPECIFIC CONDITIONS.

   F. FLOOD SIDE SCOUR PROTECTION OR WAVE RUN UP BERMS MUST BE CONSIDERED WHERE WAVE POTENTIAL EXIST.

   G. TYPICAL DETAILS ARE THE MINIMUM REQUIREMENTS FOR CONCRETE PAVING PROTECTION.

2. FLOODWALL TO LEVEE TIE-IN GUIDANCE AND DETAILS:

   A. TIE-IN DETAILS FOR I-WALLS OR T-WALLS THAT END INTO A LEVEE SECTION MUST FOLLOW THIS GUIDANCE.

   B. AS A MINIMUM, UNCAPPED SHEET PILING MUST EXTEND 30 FEET PASS THE END OF THE FLOODWALL INTO THE LEVEE SECTION.
      PROPER EARTHEN COVER AND SCOUR PROTECTION IS MANDATORY.
      FUTURE SETTLEMENT SHOULD BE ACCOUNTED FOR IN DETAILING SCOUR PROTECTION OVER SHEETING PILING AND ADJACENT FLOODWALLS.

3. TYPICAL FLOODWALLS DETAILS SHOULD BE USED FOR TRANSITIONS FROM T-WALL OR I-WALL TO THE UNCAPPED SHEET PILING (TYPICAL SLIP JOINT). LENGTHS OF I-WALL MONOLITHS, BETWEEN EXPANSION JOINTS, SHOULD GENERALLY BE 30 FEET AND END AT THE NEAREST SHEET PILE INTERLOCK.

4. TIE-IN LIMITS AND DETAILS AS SHOWN ON THE TYPICAL DETAILS ARE MINIMUMS.

US ARMY CORPS OF ENGINEERS
NEW ORLEANS DISTRICT

MARK	DESCRIPTION	DATE	APPR.

MARK	DESCRIPTION	DATE	APPR.

U. S. ARMY ENGINEER DISTRICT
CORPS OF ENGINEERS
MISSISSIPPI VALLEY DIVISION

DESIGNED BY: XXX
DWN BY: XXX
CKD BY: XXX
SUBMITTED BY: X
DATE: DY/MM/YY
SOLICITATION NO.: W912P8-00-B-XXXX
CONTRACT NO.: W912P8-00-C-XXXX
FILE NUMBER: H-NNNNNN
FILE NAME: XXXXXXXXXXXXXXXXXXX-S-PP-NNNN
SIZE: 34X22
PLOT SCALE: NNN:1
PLOT DATE: DY/MM/YY

FEBRUARY 2006
LEVEE TIE-IN
GENERAL DESIGN NOTES

SHEET IDENTIFICATION NUMBER

GEOTEXTILE SEPARATOR FABRIC

1. THE GEOTEXTILE SEPARATOR FABRIC SHALL BE A WOVEN PERVIOUS SHEET MADE WITH PLASTIC YARN AS DEFINED BY ASTM D 883. THE GEOTEXTILES SHALL MEET THE REQUIREMENTS LISTED IN TABLE 1.

TABLE 1

REQUIREMENTS FOR SEPARATOR GEOTEXTILE

PROPERTY	TEST PROCEDURE	ACCEPTABLE VALUES
GRAB BREAKING LOAD	ASTM D 4632	200 POUNDS MINIMUM IN ANY PRINCIPLE DIRECTION
SEAM STRENGTH (**)	ASTM D 4632	100 POUNDS,MINIMUM
ELONGATION AT BREAK	ASTM D 4632	15 PERCENT MINIMUM IN ANY PRINCIPLE DIRECTION
APPARENT OPENING SIZE (AOS)	ASTM D 4751	NO FINER THAN THE U.S. STANDARD SIEVE NO. 50 AND NO COARSER THAN THE U.S. STANDARD SIEVE NO. 30
PERMITTIVITY FLOW RATE	ASTM D 4491 ASTM D 4491	0.35 PER SECOND MINIMUM MINIMUM OF 40 GALLONS PER MINUTE PER SQUARE FOOT

(*) VALUE REPRESENTS MINIMUM AVERAGE ROLL VALUE OF NEW GEOTEXTILE RECEIVED FROM THE MANUFACTURER OR DISTRIBUTOR.

(**) ALL OF THE SAMPLES SHALL YIELD TEST VALUES THAT ARE GREATER THAN THE MINIMUM VALUE THAT IS SPECIFIED.

OPTIONAL SCOUR MATERIALS:

(SCOUR PROTECTION MUST BE DESIGNED FOR THE INTENDED PURPOSE, PERFORMANCE AND QUALITY WHILE CONSIDERING LONG-TERM MAINTENANCE NEEDS.)

LIGHTLY REINFORCED CONCRETE PAVEMENT
RECOMMENDED GABIONS.
ANCHORMAT CONCRETE REVETMENTS.
ROCK FILLED GEOGRID PANELS.
ARTICULATED CONCRETE BLOCK
ASPHALT CONCRETE PAVEMENT

OTHER MATERIALS:
LIGHT WEIGHT STONE RIPRAP IS NOT RECOMMENDED (HYDRAULIC FACTORS).
LARGER STONE RIPRAP MUST BE SPECIFICALLY DESIGNED FOR SITE CONDITIONS. FOUNDATIONS SETTLEMENT MUST BE CONSIDERED.
GROUTED-IN RIPRAP OVER BEDDING MATERIALS IS AN ACCEPTABLE OPTION AS INTERIM SCOUR PROTECTION AREAS (LEVEE TIE-IN) WHERE LONG TERM EMBANKMENT SETTLEMENT IS EXPECTED.

STONE BEDDING

IF THE FOUNDATION IS ERODABLE OR THE WAVES ARE FREQUENTLY OCCURRING OR SEVERE, THEN A FILTER MAY HAVE TO BE DESIGNED. DEPENDS ON THE LEVEL OF PROTECTION AFFORDED BY THE GROUT INTO THE RIPRAP. HYDRAULICS BRANCH SHOULD BE CONSULTED. RECOMMEND A COARSE MATERIAL BE USED UNDER THE BEDDING.

NOTE: SEEPAGE CRITERIA ARE PRESENTED IN EM 1110-2-1913.
EACH BEDDING MATERIAL SYSTEM SHOULD BE DESIGNED TO BE USED WITH A SPECIFIC RANGE OF RIPRAP GRADATIONS, FOUNDATION CONDITIONS, AND CHANNEL CONDITIONS.

1. BEDDING MATERIAL

BEDDING MATERIAL UNDER RIPRAP SHALL BE 100 PERCENT CRUSHED STONE AND SHALL SHOW AN ABRASION LOSS OF NOT MORE THAN 40 PERCENT WHEN TESTED IN ACCORDANCE WITH ASTM C 131 AND A SOUNDNESS LOSS OF NOT MORE THAN 15 PERCENT WHEN SUBJECTED TO 5 CYCLES OF THE MAGNESIUM SULFATE SOUNDNESS TEST IN ACCORDANCE WITH ASTM C 88. BEDDING SHALL CONFORM TO THE FOLLOWING GRADATION WHEN TESTED IN ACCORDANCE WITH ASTM C 136:

NOTE: THE LARGEST SIZE APPROPRIATE FOR THE RIPRAP BEING SHOULD BE USED SO THAT THE MATERIAL DOES NOT GET WASHED THROUGH THE RIPRAP. DELETE THE OTHER 2 GRADATIONS.

RIPRAP BEDDING

US SIEVE	GRADE A	GRADE B	GRADE D
2 ½-INCH	---	---	100
2-INCH	---	100	90 – 100
1 ½-INCH	100	85-100	---
1-INCH	90–100	---	35 – 70
¾-INCH	---	35–70	---
½-INCH	25–60	---	10–30
3/8-INCH	---	10–30	---
NO. 4	0–10	0–5	0-5
NO. 8	0–5	---	---
NO. 200	0–1	0-1	0-1

STONE BEDDING UNDER CONCRETE PAVING

2. BEDDING

BEDDING MATERIAL UNDER CONCRETE PAVING SHALL SHOW AN ABRASION LOSS OF NOT MORE THAN 40 PERCENT WHEN TESTED IN ACCORDANCE WITH ASTM C 131 AND A SOUNDNESS LOSS OF NOT MORE THAN 15 PERCENT WHEN SUBJECTED TO 5 CYCLES OF THE MAGNESIUM SULFATE SOUNDNESS TEST IN ACCORDANCE WITH ASTM C 88.

BEDDING SHALL MEET ONE OF THE FOLLOWING:

2.1 CRUSHED STONE

CRUSHED STONE SHALL CONSIST OF 100 PERCENT STONE AND SHALL MEET THE FOLLOWING REQUIREMENTS WHEN TESTED IN ACCORDANCE WITH ASTM C 136 AND ASTM C 117:

US SIEVE	PERCENT PASSING
1 ½-INCH	100
1-INCH	90 – 100
¾-INCH	70 - 100
NO. 4	35 - 65
NO. 40	12 – 32
NO. 200	0 – 8

THE FRACTION OF STONE PASSING THE NO. 40 SIEVE SHALL COMPLY WITH THE FOLLOWING REQUIREMENTS:

LIQUID LIMIT (MAX.) 25
PLASTICITY INDEX (MAX.) 4

2.2 RECYCLED PORTLAND CEMENT CONCRETE:
RECYCLED PORTLAND CEMENT CONCRETE SHALL BE 100 PERCENT CRUSHED PORTLAND CEMENT CONCRETE OR WILL BE PERMITTED IN COMBINATION WITH AN APPROVED STONE FOR BASE COURSE. AFTER BEING CRUSHED, THE RECYCLED PORTLAND CEMENT CONCRETE OR THE COMBINATION OF STONE AND RECYCLED PORTLAND CEMENT CONCRETE SHALL COMPLY WITH THE FOLLOWING GRADATION.

US SIEVE	PERCENT PASSING
1 ½-INCH	100
1-INCH	90 – 100
¾-INCH	70 - 100
NO. 4	35 - 65
NO. 40	12 – 32
NO. 200	0 – 8

THE FRACTION OF RECYCLED PORTLAND CEMENT CONCRETE PASSING THE NO. 40 SIEVE SHALL BE NON-PLASTIC.

NOTES:
FOR SLOPE PAVEMENT WHERE TRAFFIC MAY PASS USE PARAGRAPHS UNDER 2.
FOR SLOPE PAVEMENT WHERE TRAFFIC WILL NOT PASS, BEDDING IS NOT RECOMMENDED. IF ENGINEER ELECTS TO USE IT, USE THE PARAGRAPHS UNDER 2.
FOR GROUTED RIPRAP, USE PARAGRAPH 1.

US ARMY CORPS OF ENGINEERS
NEW ORLEANS DISTRICT

APPR. | DATE | DESCRIPTION | MARK

DESIGNED BY: | DATE: | SOLICITATION NO.: | FILE NUMBER
DWN BY: | CHD BY: | SUBMITTED BY: | CONTRACT NO.: | PLOT DATE: auto_sysTime
FILE NAME: auto_sheet_design | PLOT SCALE: auto_scale | SIZE:

U. S. ARMY ENGINEER DISTRICT
CORPS OF ENGINEERS
http://www.usace.army.mil

SHEET IDENTIFICATION NUMBER

D. EXTRACT FROM DRAFT SCOUR STUDY

Following is an extract from "Protection Alternatives for Levees and Floodwalls in Southeast Louisiana: Phase One Evaluation," a report prepared by ERDC Coastal and Hydraulics Laboratory. The document is still a draft and is marked "Intended for internal Corps use only."

The extract included here is Chapter 4, "Protection for Overtopped Floodwalls." This information is provided to designers to illustrate some of the design issues to be addressed when designing scour protection. This extract is provided for information only.

4 Protection for Overtopped Floodwalls

Failure Modes of Concrete and Sheetpile Floodwalls

Floodwall failures can be broadly grouped into two categories: (a) structural failure of the vertical wall due to applied hydrodynamic pressure forces; and (b) foundation failure due to seepage and liquefaction, slip surface or shear plane failures, and loss of lateral support due to erosion. This chapter focuses only on protection from loss of foundation support due to the erosive impact of falling water that has overtopped the floodwall.

Floodwalls that might be overtopped by rising water should be designed with erosion protection on the protected (dry) side capable of resisting the force of the free-falling water jet. Figure 4.1 illustrates flow overtopping a floodwall and plunging (in this case) into standing water on the protected side of the floodwall. The plunging jet penetrates the water and creates large eddies that erode material from the unprotected soil surface. The same mechanism will scour bed material when there is not standing water on the protected side of the floodwall.

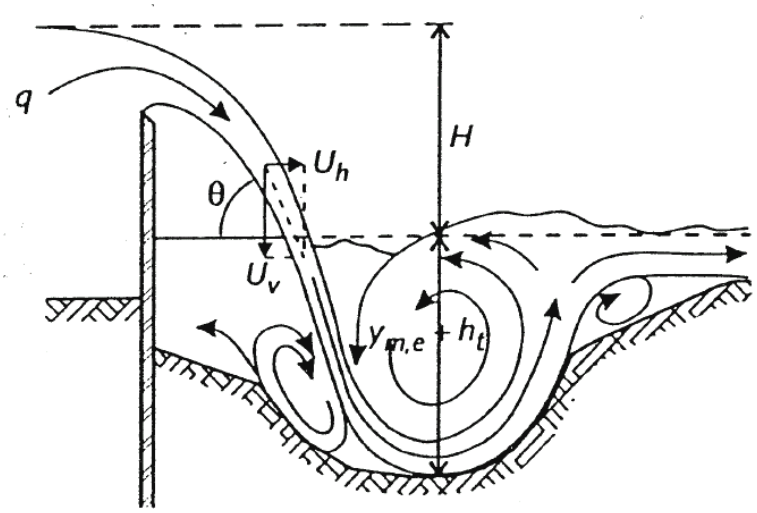

Figure 4.1. Scour hole formation by overtopping jet (from Hoffmans and Verheij 1997)

Eroded material is thrown into suspension and carried away by the turbulent flow. This scouring action removes material that may be providing critical lateral support pressure against the protected side of the vertical floodwall. Failure occurs if the remaining, undamaged portion of the foundation adjacent to the wall cannot withstand either the shear force or the overturning moment exerted on the floodwall by the elevated water on the flood side of the wall.

Total collapse of a section of the floodwall allows a large volume of water to flow into the protected region through the resulting breach, and this may cause adjacent wall sections to fail and enlarge the breach. Localized partial failure includes tilting of the floodwall so gaps open up between the dislodged section and adjacent undamaged floodwall. Provided the wall does not tilt farther, it still affords some degree of flood protection. However, the wall top elevation is deceased slightly by tilting, and the overflowing water jet will be directed on foundation soil farther away from the wall that could increase the scour hole width.

Figure 4.2 shows scour on the protected side of an I-wall adjacent to the Lakefront Airport. A deep trench was scoured by the overflowing jet, but in this case the floodwall does not appear to be affected by the loss of lateral support at the base.



Figure 4.2. Scour trench formed by overtopping flow at I-wall adjacent to the Lakefront Airport (photograph by Peter Nicholson from Seed, et al. (2005)).

Figure 4.3 shows the I-wall along the east side of the IHNC at approximate B/L Sta 11+00 (DM3 Chalmette Area Plan), looking toward the Claiborne Avenue bridge. Depth of scour was to the bottom of the I-wall concrete cap (2 ft), and scour trench width was approximately 7 ft. The I-wall top elevation was designed to a height of 15 ft above mean sea level, the bottom of the concrete cap was at elevation 7 ft, and the earthen levee

crown was at elevation 9 ft. Actual wall height was reported to be 12.5 ft when converted to local mean sea level, and the storm surge height was reported to be up to 15 ft. As an approximation of the overtopping water impact, a surge crest 2.5 ft above the floodwall impacted the earthen levee crown from a height of 6 ft. Using procedures developed in the following section, the falling jet of water was estimated from Figure 4.12 to have an impact velocity of about 23 ft/sec, and the impact force was estimated from Figure 4.13 to be about 700 lb/ft. The water impact removed a portion of the earthen levee crown, including all of the structural backfill zone adjacent to the concrete wall.



Figure 4.3. Scour trench on the east side of the IHNC

Soil scour within the structure backfill zone is also evident at other locations such as the T-wall on the north side of Gate 13E on the east side of the IHNC near Lakefront Airport at approximate W/L Sta 61+38 (DM2 Supplement 8 IHNC Remaining Levees). The top of T-wall elevation was 13.25 ft (MSL) and the existing top of ground elevation was 0.1 ft (MSL), from drawing file H-2- 24111, plate IV-20. Figure 4.4 shows a scour trench with depth of 30 in. and trench width of approximately 8 ft. Overtopping water dropped 13 ft before impacting the levee. Figures 4.12 and 4.13 were used to estimate an impact velocity of about 30 ft/sec and an impact force over 700 lb/ft.



Figure 4.4. Scour trench at a T-wall on the east side of the IHNC

Reaches along the MRGO protected by exposed sheetpile floodwalls experienced scouring on the backside, and breaches occurred at several locations. Figure 4.5 shows a section with 4300 ft of sheetpile damage along MRGO between Bayous Bienvenue and Dupre, St. Bernard Parish. The damaged sheetpile section is near utility crossings, with scour on the protected side and levee crown. B/L Sta 590+70 is centerline of the two pipelines.

Larger breaches along sheetpile reaches were evident on the north bank of the GIWW, including the Bulk Loading Facility, the Michoud Canal (Air Products plant), and pump station 15. Figure 4.6 shows the Air Products plant breach near Sta 772+00 B/L (New Orleans East Back Levee). Scour depths were 10 to 12 ft on both the floodside and protected side of the sheetpile wall. Nearest borings on either side of the failure, 5-E and 6-E (from plate 5, DM2 Supp 4, March 1971) shows CH material with sand / silt lenses in the pre-existing (1965) levee at crown elevation ~12 ft, prior to construction of the sheetpile wall. The storm surge in the GIWW was at an approximate elevation of 15 to 17 ft, and Figures 4.12 and 4.13 indicate the estimated overtopping jet impact velocity ranged up to about 23 ft/sec, and the impact force ranged up to about 700 lb/ft. Note that the breach occurred in the sheetpile reach, and not along the adjacent transitions to earthen levee on the east side and connection to the T-wall on the west side.



Figure 4.5. Overtopping scour at sheetpile floodwall along the MRGO



Figure 4.6. Sheetpile floodwall breach on the New Orleans East Back Levee

Several other vertical structures (mostly I-walls) were catastrophically breached along the 17th St. and London Avenue Canals and the IHNC (East and West sides). Investigations are ongoing, but it appears that failure modes other than erosion and scour caused by overtopping water may have played larger roles at those locations.

Design Physical Parameters

Scour protection placed on top of the foundation soil on the protected side of floodwalls must be able to withstand a free-falling jet of water that overtops the wall. This condition could persist for a prolonged period. Protection coverage must extend away from the wall sufficient distance to assure complete protection from both the direct plunging water jet, and also from the resulting ground-parallel supercritical flow and eventual hydraulic jump that forms some distance from the wall. Important design parameters related to the flow hydrodynamics are floodwall height and height of the storm surge level relative to the floodwall top elevation.

Under the assumption that robust structural foundation protection is necessary, geotechnical design parameters are somewhat limited to the requirement that foundation soil must support the overlain protection without significant differential settlement. Also important is the possibility of soil erosion at the boundaries of the overtopping protection. Geotechnical considerations related to proper foundation design to resist the applied lateral loading on the floodwall and to prevent seepage underneath the wall are not included in this chapter.

Surge Overtopping

Storm surge overtopping of a floodwall having constant top elevation along the wall is well approximated by the classic hydraulics problem of flow over a sharp-crested weir. Assuming no viscous energy dissipation occurs over the short crest width of the vertical floodwall shown in Figure 4.7, and there are no lateral contraction effects (i.e., constant wall top elevation), discharge per unit wall length is given by the expression (e.g., Henderson 1966)

$$q = C_d \frac{2}{3} \sqrt{2g}\, h_1^{3/2} \tag{4.1}$$

The discharge coefficient, C_d, is given by the expression

$$C_d = 0.611 \left[\left(1 + \frac{v_1^2}{2gh_1} \right)^{3/2} - \left(\frac{v_1^2}{2gh_1} \right)^{3/2} \right] \tag{4.2}$$

where g is the acceleration of gravity, h_1 is height of the surge above the wall, and v_1 is the upstream velocity as shown on Figure 4.7. The above discharge formulation was referred to as the "Weisbach extention of the Poleni formula" by Rouse (1961) with the addition of C_d in Eqn. 4.1 and the definition of C_d (Eqn. 4.2) being Weisbach's contribution.

Experimental work provided a simple approximation for C_d expressed as

$$C_d = 0.611 + 0.08 \left(\frac{h_1}{h} \right) \tag{4.3}$$

where h is the depth of the water as defined in Figure 4.7. For small values of h_1/h, the discharge coefficient approaches $C_d = 0.611$. Figure 4.8 presents discharge per unit length of floodwall as a function of surge elevation above the wall for values of h = 4, 6, 8, and 10 ft. For these cases the discharge curves do not have much variation until the ratio h_1/h approaches unity.

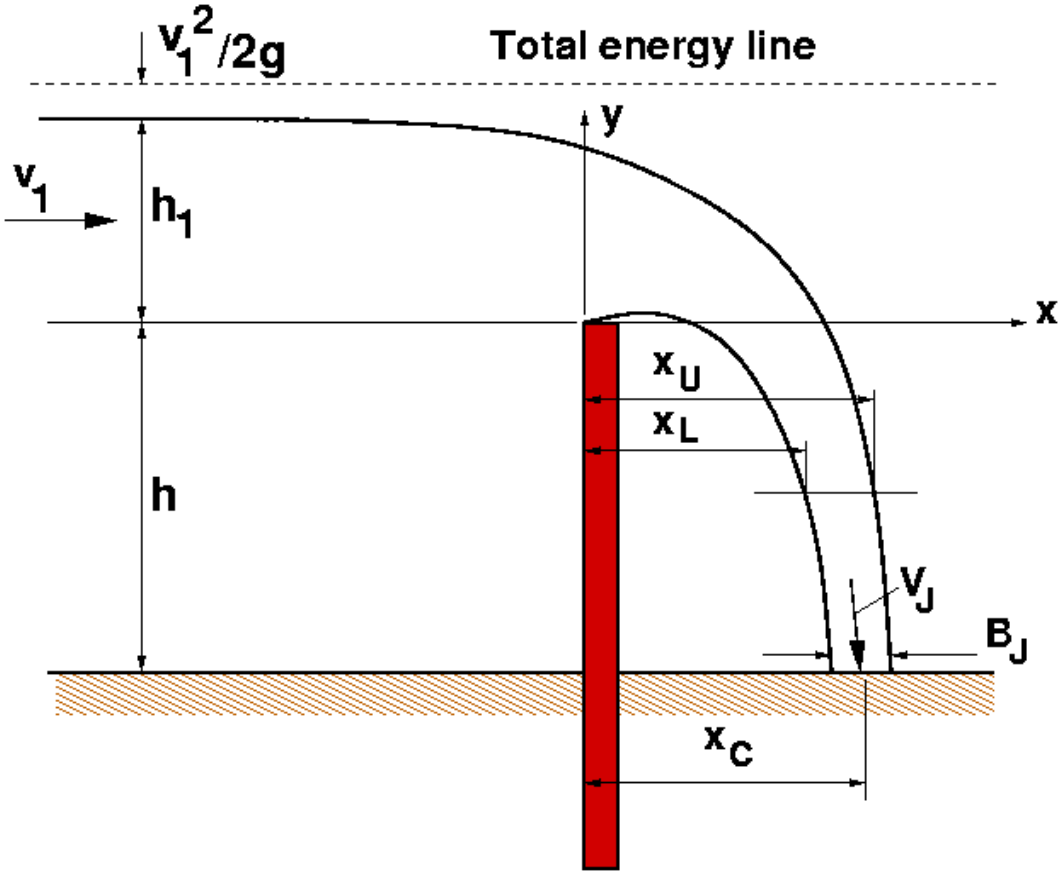

Figure 4.7. Flow over a sharp-crested weir

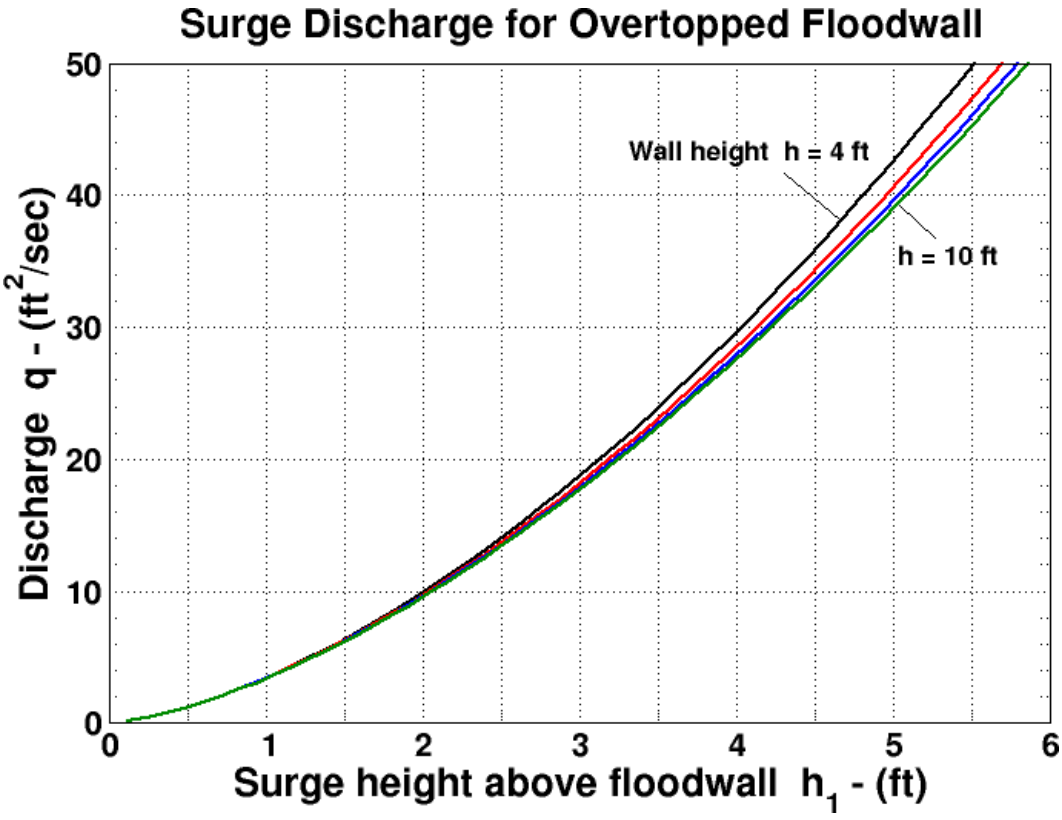

Figure 4.8. Discharge per unit floodwall length for values of *h* = 4, 6, 8, and 10 ft

The jet of water passing over the vertical floodwall has two surface profiles referred to as "nappes" (a French word meaning "a continuous surface"). The lower nappe is closest to the backside of the floodwall, and the upper nappe is the extension of the flow free surface as it spills over the wall. The trajectories of the lower and upper nappes are given in most open channel flow books (e.g., Chow 1959, Morris 1963). In dimensionless form, the equations are as follows with the *x*-*y* coordinate system as defined in Figure 4.7

$$\frac{y}{H} = A\left(\frac{x}{H}\right)^2 + B\left(\frac{x}{H}\right) + C \qquad \text{(lower nappe)} \qquad (4.4)$$

$$\frac{y}{H} = A\left(\frac{x}{H}\right)^2 + B\left(\frac{x}{H}\right) + C + D \qquad \text{(upper nappe)} \qquad (4.5)$$

where H is the total head above the weir crest, i.e.,

$$H = h_1 + \frac{v_1^2}{2g} \qquad (4.6)$$

and

$$A = -0.425 + 0.25\,G \qquad (4.7)$$

$$B = 0.411 - 1.603\,G - \sqrt{1.568\,G^2 - 0.892\,G + 0.127} \tag{4.8}$$

$$C = 0.150 - 0.45\,G \tag{4.9}$$

$$D = 0.57 - 0.02\left[10\left(G - 0.208\right)\right]^2 \exp\left[10\left(G - 0.208\right)\right] \tag{4.10}$$

with

$$G = \frac{v_1^2}{2gH} \tag{4.11}$$

For high weirs, $v_1 \approx 0$, and $H \approx h_1$, and the nappe equations reduce to the forms

$$\frac{y}{h_1} = A\left(\frac{x}{h_1}\right)^2 + B\left(\frac{x}{h_1}\right) + C \qquad \text{(lower nappe)} \tag{4.12}$$

$$\frac{y}{h_1} = A\left(\frac{x}{h_1}\right)^2 + B\left(\frac{x}{h_1}\right) + C + D \qquad \text{(upper nappe)} \tag{4.13}$$

with

$A = -0.425$
$B = 0.055$
$C = 0.150$
$D = 0.559$

Equations 4.12 and 4.13 are quadratic equations that can be solved to give values of the nappe profile x-values in terms of the vertical distance from the top of the floodwall. There are two solutions that satisfy each quadratic equation. The equations given below are the appropriate solutions yielding positive values of x.

$$\frac{x_L}{h_1} = \frac{-B - \sqrt{B^2 - 4A\left(C - y/h_1\right)}}{2A} \qquad \text{(lower nappe)} \tag{4.14}$$

$$\frac{x_U}{h_1} = \frac{-B - \sqrt{B^2 - 4A\left(C + D - y/h_1\right)}}{2A} \qquad \text{(upper nappe)} \tag{4.15}$$

The intersection points of the lower and upper nappes with the horizontal ground level on the protected side of the floodwall are found by setting $y = -h$ in the above equations. The horizontal width of the overtopping jet at impact is given by

$$B_X = x_U(y = -h) - x_L(y = -h) \tag{4.16}$$

and the distance from the flood side of the wall to the center of the jet at impact is given as

$$x_C = \frac{x_U(y=-h) + x_L(y=-h)}{2} \tag{4.17}$$

Figure 4.9 shows the variation of jet impact location distance, x_C , from the floodwall front face as a function of surge elevation above the wall crest and the vertical plunge distance. Horizontal width of the plunging jet at impact is given as a function of the same parameters in Figure 4.10.

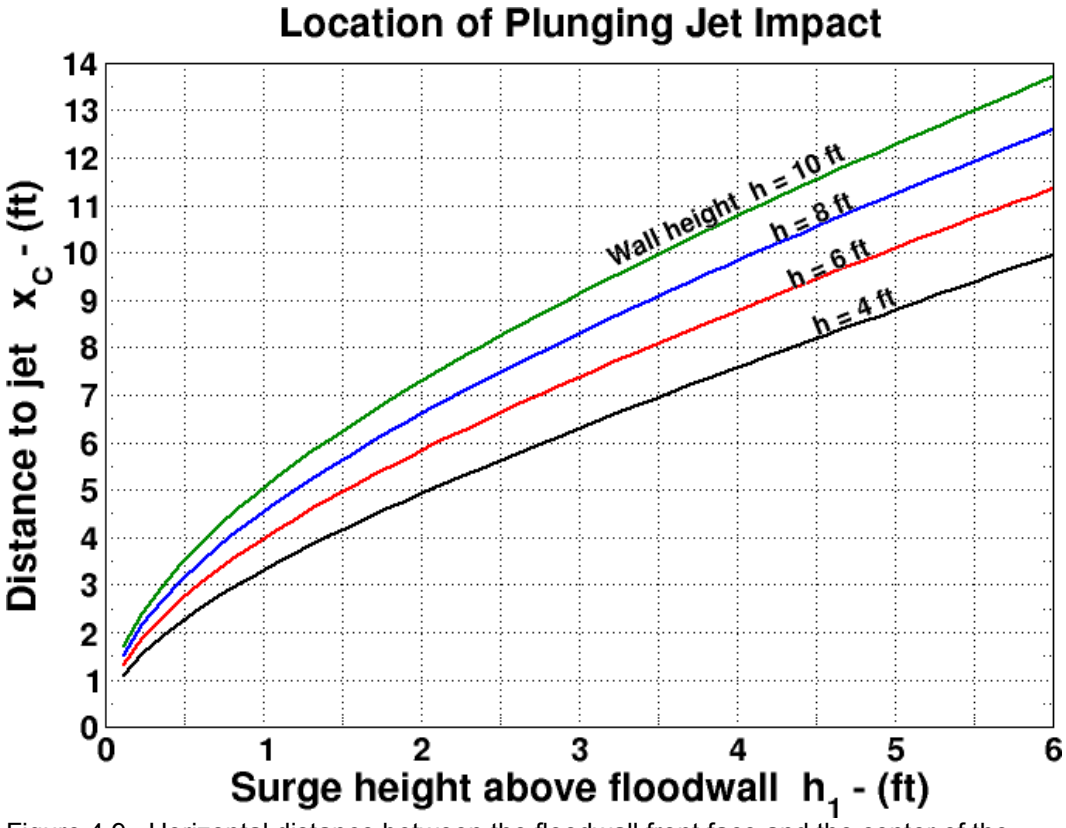

Figure 4.9. Horizontal distance between the floodwall front face and the center of the plunging jet at impact

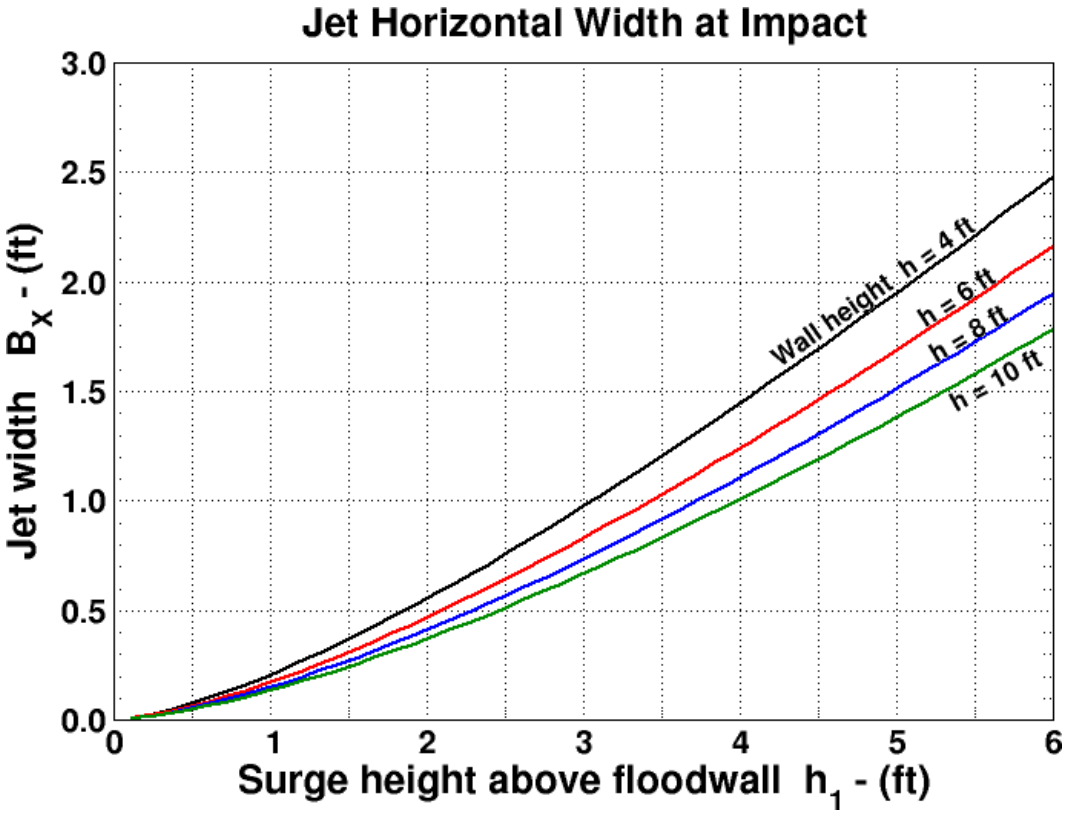

Figure 4.10. Horizontal width of the plunging jet at impact

If there is no venting, the air pressure in the space between the floodwall and lower nappe may become less than atmospheric as air is entrained into the jet during sustained overtopping. The decreased pressure will draw the plunging jet closer to the wall; however, this decrease in plunge point location away from the vertical wall is difficult to predict. This is likely not a problem because the scour protection will probably cover the entire region from the base of the wall out well past the location of jet impact.

The overtopping jet impacts the ground at an angle less than vertical (which is given by –90 deg in the coordinate system defined in Figure 4.7). The jet entry angle is well approximated by the average of the angles of the lower and upper nappe profiles when they intersect the horizontal ground level. The entry angles of the nappe profiles are found by taking the derivative of Eqns. 4.12 and 4.13 and evaluating the result at $x = x_L$ and $x = x_U$, respectively, to get

$$\theta_L = \tan^{-1}\left(\frac{dy}{dx}\right)_L = \tan^{-1}\left(\frac{2Ax_L}{h_1} + B\right) \tag{4.18}$$

$$\theta_U = \tan^{-1}\left(\frac{dy}{dx}\right)_U = \tan^{-1}\left(\frac{2Ax_U}{h_1} + B\right) \tag{4.19}$$

where $A = -0.425$ and $B = 0.055$. The jet entry angle is estimated as

$$\theta_J = \frac{(\theta_L + \theta_U)}{2} \tag{4.20}$$

Overtopping jet entry angles are shown on Figure 4.11 as a function of surge height above the floodwall for a variety of wall heights.

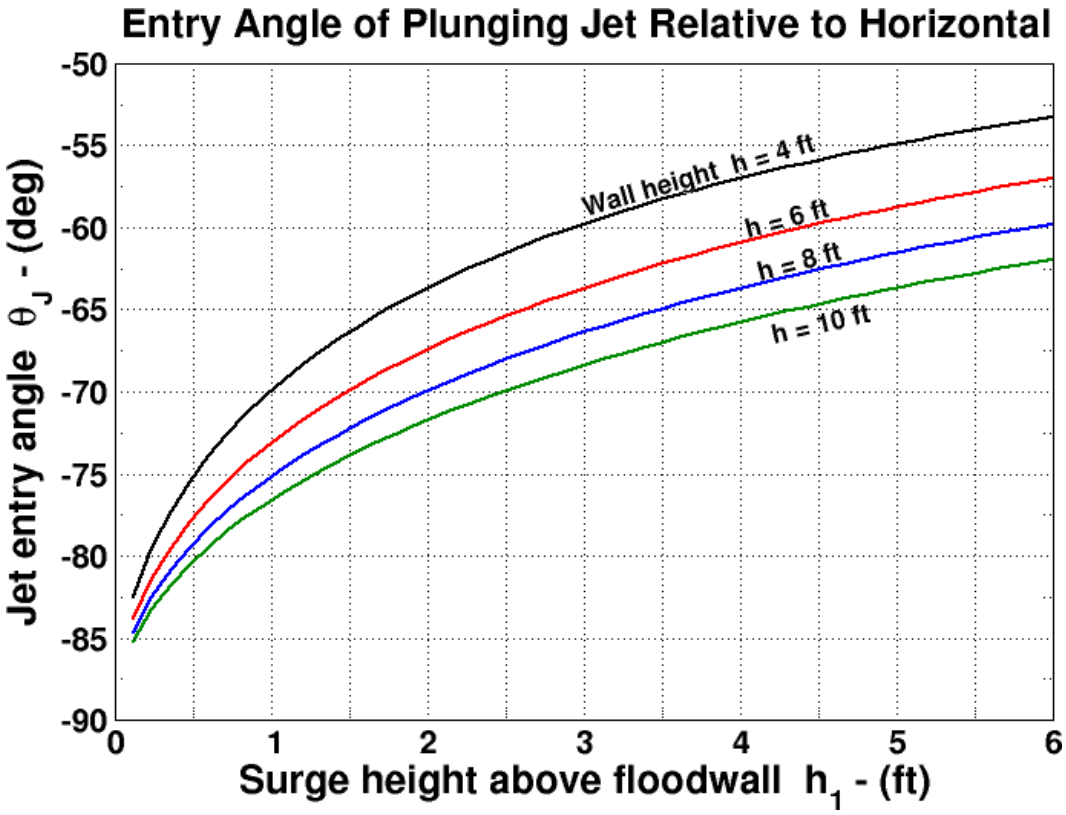

Figure 4.11. Overtopping jet entry angle relative to the horizontal ground level

From geometric considerations the width of the impinging jet normal to the flow streamlines can be estimated with reasonable accuracy by the formula

$$B_J = B_X \sin(-\theta_J) \tag{4.21}$$

Discharge over the floodwall remains constant for steady flow, and the discharge per unit length of the plunging jet at impact with the ground surface is given simply as the jet velocity parallel to the flow streamlines times the width of the jet normal to the flow. Thus, the jet entry velocity can be estimated as

$$V_J = \frac{q}{B_J} \tag{4.22}$$

Figure 4.12 shows jet impact velocities as a function of surge height above the floodwall and vertical distance to the ground level.

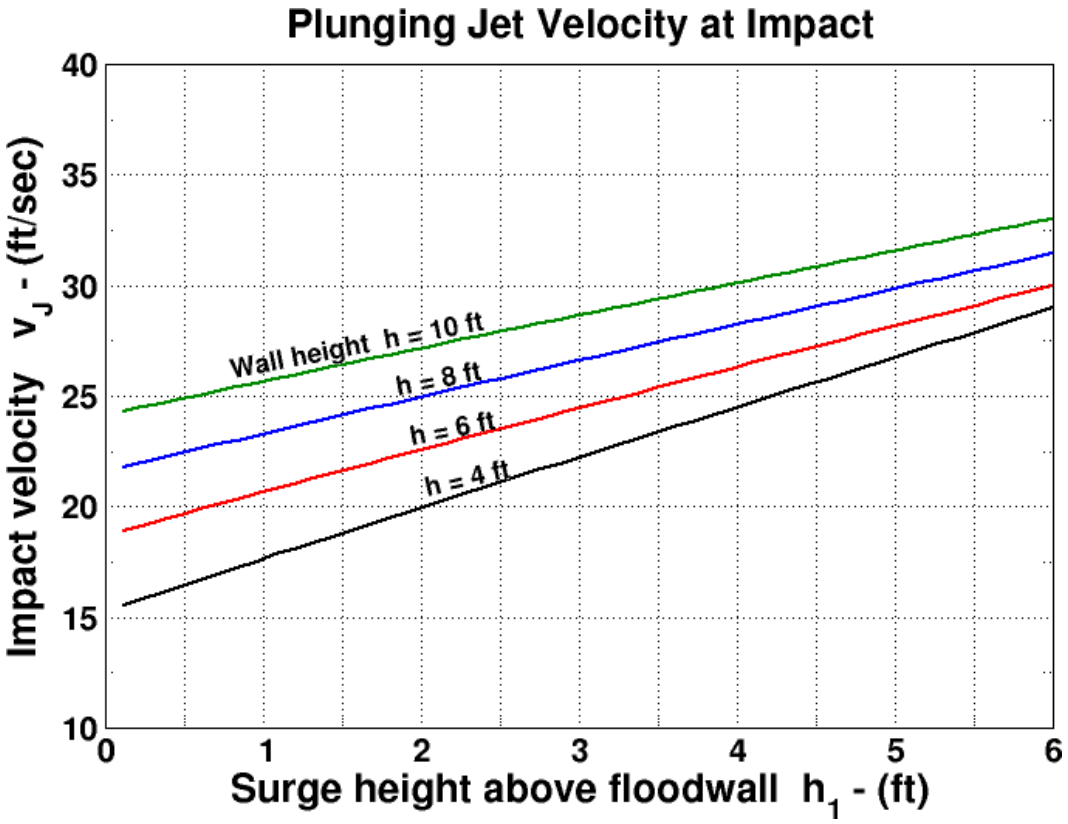

Figure 4.12. Overtopping jet velocity at impact with the ground

Finally, the total force (thrust) exerted by the overtopping jet on the scour protection per unit length along the wall is given in inviscid jet theory (e.g. Milne-Thompson 1960) as

$$F_J = \rho B_J \left(v_J\right)^2 \tag{4.23}$$

where ρ is water density. This equation is an expression of the momentum flux of the jet, and the force is directed parallel to the jet streamlines.

Figure 4.13 presents force magnitude estimates based on Eqn. 4.23. As shown on Figure 4.13, the lines for the different fall distances h are quite close because the range of fall distance is not too large. However, the impact force increases substantially with overtopping elevation h_1, that is directly related to total discharge per unit length of wall. The convergence of the lines at the higher values of h_1 is not physically correct. This convergence is most likely caused by the empirical approximations for discharge coefficient C_d (Eqn. 4.3) and jet width B_J (Eqn. 4.21).

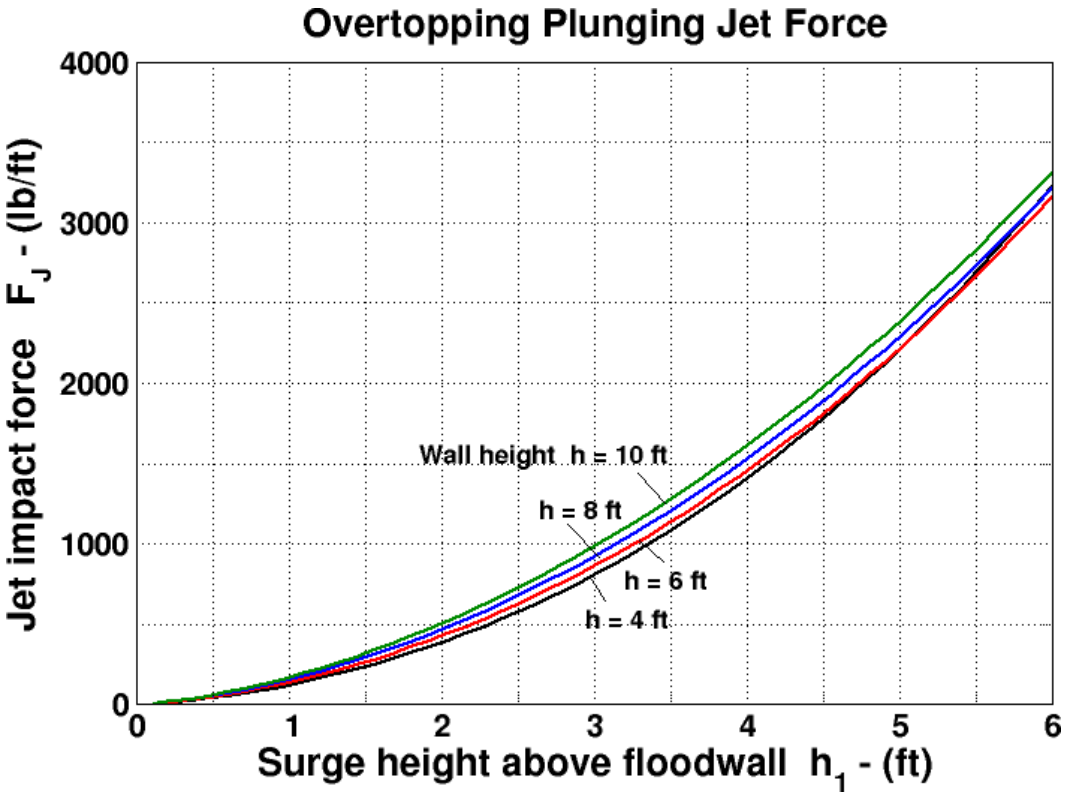

Figure 4.13. Overtopping jet impact force on the ground

The force of the overtopping jet at impact creates high pressures because the jet width is narrow (see Figure 4.10). The impact force given in Figure 4.13 can be resolved into vertical and horizontal components using the estimated jet entry angle given on Figure 4.11. Thus, the apportioning of force between vertical and horizontal components will vary with overtopping condition, and successful scour protection must be able to resist the expected range of vertical and horizontal forces. For high discharges over low walls, the jet entry angles are far from vertical, and the water after impact will retain a substantial horizontal velocity as it flows down the protected side of the earthen levee.

Depending on the elevation of the adjacent land on the protected side of the floodwall, there may be standing water at the base of the wall. The impact force of an overtopping jet will be dissipated to some degree as it enters the standing water, but it still retains sufficient force to erode unprotected foundation soil. Scour protection that relies on self-weight for stability will be less stable when submerged, and the overtopping jet may be able to dislodge submerged components of the protection.

Wave Overtopping

Waves can overtop a vertical floodwall even when the storm surge elevation is below the top elevation of the wall as illustrated by Figure 4.14. That portion of the wave above the floodwall will tumble over the wall and plunge to the ground under the force of gravity. The quantity of water will vary in time, and the unsteady discharge will be a function of wave height, wave period, and surge elevation relative to the wall. Erosion of unprotected soil will occur as the waves cascade over the wall, but the unsteadiness of the

process, coupled with the variation of impact point due to irregular waves, makes scour estimation difficult, if not impossible.

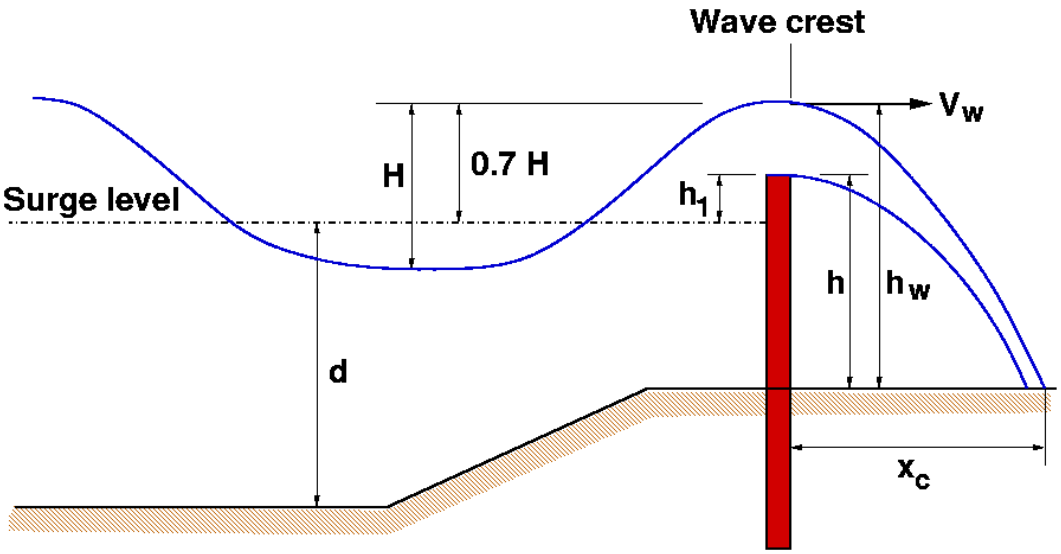

Figure 4.14. Definition sketch of wave overtopping floodwall

The hydrodynamics of this phenomenon is quite complex because a substantial portion of the incident wave is reflected by the floodwall, and the reflected wave will interact nonlinearly with the incident wave. Therefore, a few simplifying assumptions are necessary for the approximation given here.

Assume the incident waves are reasonably approximated as shallow water waves. Furthermore, assume the incident wave crest height reaches the floodwall without being modified by the reflected wave. In other words, there is no nonlinear interaction between the incident and reflected wave. Waves in deeper water are symmetrical about the still water level (swl) with the vertical distance between the wave crest and swl is the same as the vertical distance between the wave trough and swl. However, in shallow water the wave crests become more peaked and the troughs become flatter, and the vertical distance between the wave crest and the swl becomes proportionally larger. For this simple development, assume the distance of the wave crest above the swl is 70% of the wave height, H, as shown in Figure 4.14.

As the wave crest passes over the floodwall, the orbital velocity of water particles at the free surface will be nearly the same as the wave celerity. Using the expression for wave celerity given by third-order theory for nonlinear, shallow water waves, the horizontal velocity V_w is given by

$$V_w = C = \sqrt{g(d + H)} \tag{4.24}$$

where g is gravity, d is water depth, and H is incident wave height. Note that wave celerity is independent of wave period in shallow water, and instead depends only on water depth and wave height.

The distance from the wall to where the plunging wave crest impacts the ground level is found using the formulas for an object in free fall having an initial horizontal velocity of V_w and falling a vertical distance h_w. The total vertical fall distance is given as

$$h_w = h + 0.7\,H + h_1 \tag{4.25}$$

where h is the vertical distance between the top of the flood wall and the ground level, and h_1 is the distance between the top of the wall and the surge level. If the surge level is lower than the floodwall, h_1 is negative. When the surge overtops the floodwall, h_1 is positive.

The vertical fall distance is a function of fall time and gravitational acceleration, i.e.,

$$h_w = \frac{1}{2} g\, t^2 \tag{4.26}$$

Thus, the fall time for a water particle at the wave crest free surface to fall to the ground level is given by

$$t_f = \sqrt{\frac{2\,h_w}{g}} \tag{4.27}$$

The horizontal distance traversed by the water particle during this free-fall time is simply

$$x_C = V_w\, t_f \tag{4.28}$$

Substituting Eqn. 4.24 for V_w and Eqn. 4.27 for t_f into Eqn. 4.28 yields

$$x_C = \sqrt{2\left(d + H\right)\left(h + 0.7\,H + h_1\right)} \tag{4.29}$$

Figure 4.15 shows the variation in impact distance from the floodwall as a function of surge elevation relative to floodwall elevation for different floodwall heights above the ground level. These curves were calculated using Eqn. 4.29 with a wave height of H = 4 ft, and a water depth of d = 16 ft. Different curves should be generated for other values of H and d.

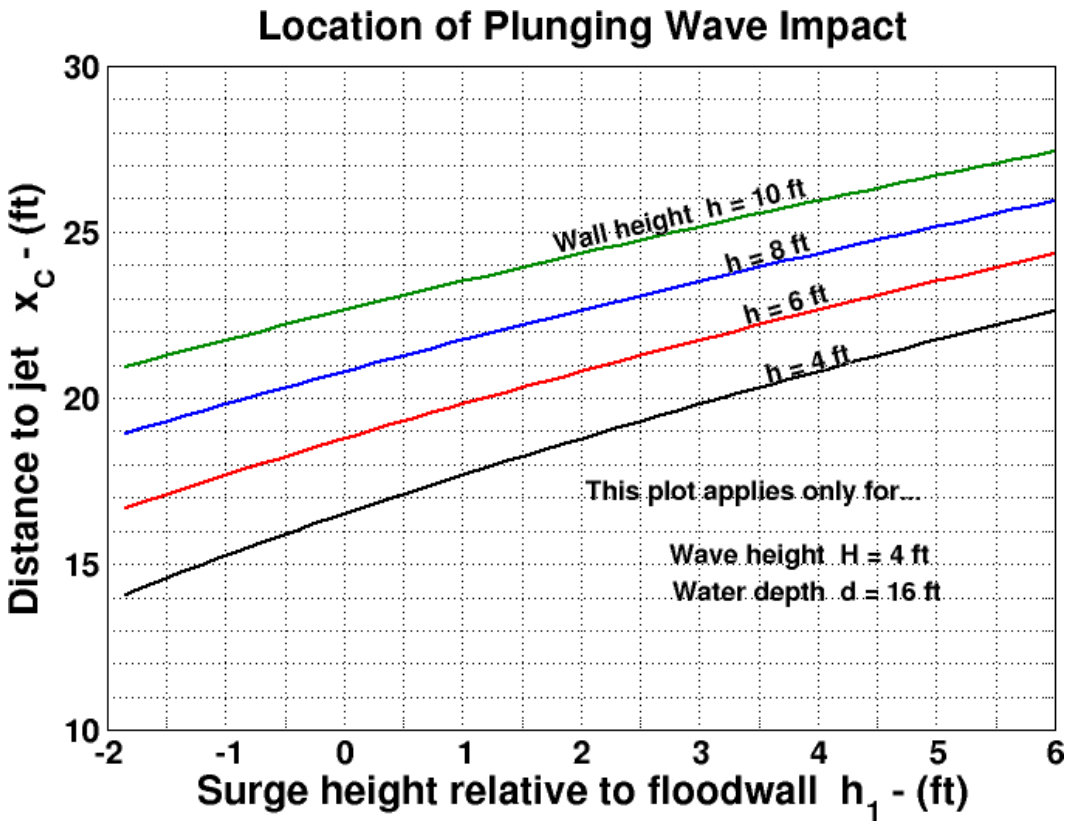

Figure 4.15. Horizontal distance between the floodwall and approximate impact point of plunging wave crest

The horizontal distance between the floodwall and the plunging wave impact point is appreciably farther than corresponding distances for surge overtopping without waves as estimated from Figure 4.9. This difference is due to the forward speed of the wave crest, which is greater than the fluid velocity of the overtopping surge. If the elevation of the surge level is substantially below the floodwall top elevation, only the highest waves will overtop the wall, and the quantity of overtopped water will be relatively small. As the surge level rises, more of the wave crests will topple over the wall, and the likelihood of scour damage increases.

Depending on the cross section of the earthen levee supporting the floodwall, the horizontal projection of the overtopping jet may over-shoot the crown of the earthen levee and impinge on the protected side slope. It this case it is a simple matter to continue the parabolic trajectory used in this analysis to estimate the point of impact on the rear slope. The easiest procedure is trial and error solution of Eqn. 4.29 until values of x_C and h correspond to the surface of the levee protected side slope.

Wave and Surge Overtopping

Where both waves and storm surge overtop the floodwall the hydrodynamics are complex, and the simple methods provided here are less valid. More research is needed to establish accurate hydrodynamic design criteria. Steady overflow associated with the storm surge elevation above the top of the floodwall is combined with the unsteady

waves propagating on top of the surge. This results in a pulsating unsteady flow over the wall with larger discharge when the wave crest passes over the wall, and decrease discharge when the wave trough is at the wall. This pulsating action affects the location of the free-falling water jet in time with the jet landing farther from the floodwall with greater flow volume when the wave crest overtops. Consequently, scour protection for the case of wave and surge overtopping must be more robust then needed for surge overtopping alone, and the protection must extend a greater distance from the protected side of the floodwall.

A first approximation of the maximum jet impact horizontal distance from the wall can be estimated using Eqn. 4.29 with h_1 specified as the distance between the surge elevation and the top of the floodwall (positive value). The actual impact distance may be slightly farther because the overtopping flow could add to the initial horizontal velocity (V_w) of the wave. The maximum impact force of the falling jet will be greater than that estimated for surge overtopping alone (see Figure 4.13).

Performance Criteria

Below are listed the key performance criteria pertinent to protection for vertical floodwalls and sheetpile walls. Many of the criteria given below are nearly identical to those given in earlier chapters. At this stage much of the performance criteria are in the form of questions related to various aspects of armor and protection performance. Some question responses may yield specific answers based on test results and/or previous experience, whereas answers to other questions may result in assigning a value such as poor, fair, good, excellent, or unknown. Performance criteria will continue to evolve as additional information is gathered.

Survivability Considerations

Survivability of floodwall toe protection on the protected side can be divided into two categories. The first category is survivability of the protection over the relatively short duration of a major hurricane event when the floodwall is overtopped and large quantities of free-falling water impact the ground with substantial force. Wave and water overtopping will cause maximum destructive loading on the protective system, and thus, constitute the critical design condition.

Evaluation of potential armoring or protection alternatives for the overtopping category should determine which of the following scenarios best describes how the system will respond to a major overtopping event where the storm surge level exceeds the top of the floodwall for as much as three hours, and the flow parameters are within the ranges estimated in the previous section.

a) The protection system is expected to survive intact with only minor damage that does not endanger the floodwall's integrity and does not result in a significant loss of foundation material that provides lateral support. Repairs may be needed, but the repairs are not urgent and can be scheduled as resources allow.

b) The protection system suffers damage; but the damage is progressive in time, and more importantly, the loss of foundation material does not ultimately result in loss of lateral support and floodwall displacement or collapse. In other words, the floodwall has sustained some damage to the scour protection and considerable loss of foundation material, but the wall remains intact through the duration of the event. Immediate repairs must be undertaken as soon as feasible.

c) The protection system holds for a while, but then fails in a catastrophic manner with nearly complete loss of protective functionality. Foundation soil will erode as if unprotected, and the floodwall is at risk as lateral supporting soil is removed. The floodwall must be repaired, and a nearly complete reinstallation of the protection is required.

The second survivability category pertains to long-term deterioration of the scour prevention system or some of its components, even in the case where the floodwall is not exposed to overtopping flow for many years. Factors that may be important include material degradation, adaptation to differential settlement of the earthen levee supporting the floodwall, gradual stress loading on components during settlement, burrowing by small mammals, and tolerance to unintended plant growth within the protective system.

Long-term survivability assumes necessary monitoring and maintenance is performed as recommended (see below).

Geotechnical Considerations

Armoring is the only practical solution for preventing scour caused by water and waves overtopping a vertical floodwall. Soil strengthening techniques and some products designed to help soil embankments resist lateral flow will most likely not withstand the direct nearly-vertical impact of the overtopping water jet. The following are the main geotechnical considerations related to armoring the levee crest on the protected side of vertical floodwalls and sheetpile walls.

a) Bearing capacity. The soil must have adequate bearing capacity to support the overlaying scour protection without significant differential settlement.

b) Soil retention. The scour protection system must be designed to prevent foundation soil from leeching out between voids in the protective layers. Excessive loss of soil could result in localized collapse of the scour protection that might rapidly spread. If a geotechnical filter fabric is placed under the protection system, it must relieve any built-up pore pressure.

c) Erosion at protection termination and tie-in locations. Ideally, the scour protection will continue some distance farther away from the wall and eventually either terminate or tie into slope protection. Where no tie in to slope protection exists, the soil abutting the protection must have sufficient strength to resist the erosive effect of the overtopping water runoff.

Construction/Installation Considerations

The following list provides the more important considerations related to installation of scour protection systems on the protected side of existing undamaged and repaired vertical floodwalls. The items are not listed in any particular order of importance.

a) Design modification. Does the scour protection method require modifying the floodwall design to accommodate the armoring system? For example, is the added weight of the protection system such that underlying soils will compact resulting in loss of levee height through settlement.

b) Site access. Some portions of the existing levee and floodwall system may have limited access for heavy equipment, or for transporting materials to the work site. What site access and maneuverability are required to install a particular protection system?

c) Equipment requirements. Are there any special equipment requirements to install a particular system that might be considered out of the ordinary? If so, how might this impact construction schedule and cost per installed area?

d) Installation skills. Are there any particular or unusual skills required to install a particular system successfully? If so, what are these skills, how can these skills be obtained by the work force, and what construction monitoring and oversight are needed to assure competent installation?

e) Installation tolerances. Does successful system installation depend on precise placement of system components? If so, what are the tolerances, what methods are used to attain accurate placement, what onsite oversight and inspection are required, and what are the consequences if tolerances are not met?

f) Rate of installation. How much scour protection can be installed in an average work week, and what are the parameters associated with this rate (personnel, equipment, etc.)?

g) Protection termination and tie-in locations. The peripheral boundaries where the protection system terminates or joins with some other form of protection are often where initial damage occurs. Scour protection must extend away from the floodwall a sufficient distance to cover the region where direct water jet impact is expected. However, overtopping water will flow laterally after impact, most likely flowing down the earthen levee slope on the protected side. This flow will have high velocities, and some of the same slope protection concepts discussed in Chapter 3 apply here. Relatively light-weight scour protection systems should be affixed to the side of the floodwall to prevent possible dislocation by uplift forces. How does the particular protection system deal with transition points? What is the recommended extent of protection coverage to assure no problems will arise at the transition between protection and no protection? Is it possible and advisable to reinforce the boundaries with a more robust form of armoring (e.g., at the toe where head cutting is likely to initiate)?

h) Immersion effects. Are there any adverse consequences arising from immersion of the scour protection? If local topography is such that overtopping water can pond immediately behind the floodwall, the immersed weight of the scour protection will be considerably less than the dry weight (less than half for concrete). The impinging jet will have reduced impact force, but the capability of the protection to resist the force by self-weight is significantly reduced.

i) Construction staging. What is the construction sequence for a particular scour protection system, and does this have any effect on installation. For example, can some system components be prefabricated offsite, and then transported to the construction site by the most economical means?

j) Safety. What are the safety concerns and issues associated with a particular protection system? Will special precautions or training be needed, and what is the plan to assure all safety measures will be strictly implemented and enforced?

k) Removable and reinstallation. It is anticipated that some levee crest elevations and associated floodwalls may need to be increased by addition of earthen material to compensate for settlement or to increase the level of protection. In such an event, can a particular scour protection system be removed and reinstalled? The reinstalled protection must provide the same level of protection afforded by the original installation, and most of the cost will be associated with re-handling the armoring and not purchase of large quantities of new armoring materials

Maintenance and Repair Considerations

Long-term maintenance of the floodwall foundation scour protection is paramount for assuring continual integrity of the southeast Louisiana levee system. Without proper inspection, maintenance, and repair of deteriorated or damaged sections of floodwall scour protection, risk of damage from hurricanes weaker than the design storm increases. Below are evaluation considerations related to maintenance and repair of armoring systems.

a) Maintenance requirements. What are the specific maintenance requirements for a particular scour protection system? Is special equipment or specific skills required for ongoing maintenance?

b) Timing for maintenance. Is maintenance for a particular system performed at regular intervals, or only when needed as determined by inspection?

c) Inspection. How often is inspection recommended for a particular protection system? What is the recommended inspection technique? Which aspects of the system should be inspected? How much of the protection can be inspected in a day? Are any special tests or testing apparatus required to conduct inspections?

d) Signs of deterioration. What are the signs that a protection system is deteriorating, and can these signs be readily detected during inspection? What are the indicators that maintenance needs to be performed?

e) Maintenance costs. What costs are associated with maintenance beyond personnel time? For example, does usual maintenance require a significant mobilization of equipment?

f) Damage repair procedures. After episodes resulting in significant or wide-spread damage, what are the repair procedures? How is the repaired section tied into the adjacent undamaged protection? Can small sections of isolated damage be repaired by a small crew using readily obtained equipment?

g) Robustness of repair. Will repaired sections of damaged protection retain the full strength and resistance to damage as the original installation, or will the repair section represent a weakened area that may require additional strengthening?

h) Safety during inspection, maintenance, and repair. Are there any safety concerns or safety procedures specific to a particular protection system? Are there any additional risks working near a damaged portion of the protection beyond those that could be reasonably identified or anticipated?

Environmental Considerations

The following is a list of considerations related to environmental consequences that might apply to some scour protection alternatives.

a) Environmentally sensitive areas. Are there any aspects of the scour protection system that might make it difficult to deploy on floodwalls located in environmentally sensitive areas?

b) Toxic materials. Does the protection system contain any toxic materials or chemicals that might be released into the environment either during installation or over time due to deterioration? Are there any special treatments or handling considerations to assure no toxics are released?

c) Endangering animals or plant species. Are there any aspects of the protection system that might be considered detrimental or dangerous to local plant and animal species?

Overview of Concrete and Sheetpile Floodwall Protection

The forceful, near vertical, impact of falling water due to surge and wave overtopping at vertical floodwalls imposes loads on the protection system that are vastly different than loads exerted by water flowing parallel to the protection surface. As a consequence, armoring systems fully capable of protecting backside slopes of levees and earthen levee transitions may not be appropriate for protecting the levee crown soil on the protected side of an overtopped floodwall. For example, individual stones will be dislodged in riprap protection, turf reinforcement mats might not withstand forces applied perpendicular to the mat, and soil or small stones used as geocell fill will be flushed out by the water.

This section briefly overviews four protection alternatives that have sufficient strength, rigidity, and robustness to withstand high impact loads from overtopping water jets without loss of functionality. All the options have the disadvantage of adding significant weight to the levee foundation, and this could be problematic where soil is weak. The following are considered to be viable alternatives for armoring floodwalls on the protected side:

a) Poured-in-place reinforced and non-reinforced concrete

b) Grouted stone riprap

c) Rock-filled mattresses

d) Articulated concrete mats

Below are brief generic descriptions of these protection systems.

Poured-in-place reinforced and non-reinforced concrete. Levee soil can be protected by an impermeable, continuous, reinforced concrete slap containing light reinforcement mesh. Alternately, the concrete slab can be made thicker without reinforcing. The slab is formed, and concrete is poured in place to cover the area from the base of the floodwall protected side out a distance beyond the expected splash-down point of the overtopping jet. The slab can be tied into the floodwall using a variety of techniques. This provides a rigid horizontal surface that can absorb the impact of falling water and divert the overtopping jet toward the backside slope of the earthen levee. Advantages include high strength and durability, readily available materials, and flexibility to vary project dimensions as needed. Where appropriate, the concrete apron can be designed as a roadway for vehicular traffic. The main disadvantage of reinforced and non-reinfoced concrete is its relative intolerance to differential settlement. Where future plans call for addition of levee height, concrete aprons cannot be easily removed and re-used.

Grouted stone riprap. This protection method consists of conventional riprap armoring placed on top of a bedding layer and then filled with a concrete grout mixture. The purpose of the grout is to solidify the riprap protection into a solid, continuous, impermeable structure and to prevent loss of individual stones when impacted by the falling water jet. Because the grout mixture has minimal strength in tension, grouted stone riprap will have little tolerance for differential settlement of the underlying levee

crown. Once the bond between adjacent stones is broken, riprap stones can be dislodged by the overtopping flow. Advantages of grouted stone riprap are ease of installation, capability to protect varying terrain, and ease of removal for future increases in levee height. However, the removed riprap is not readily re-usable because much of the grout will remain intact. The main disadvantage of grouted stone riprap is the uncertainty associated with the long-term integrity of the grout/stone bonds if there is any ground settlement.

Rock-filled mattresses. Rock-filled mattresses are containers fabricated of geogrid material and filled with small rocks varying in size from 2 inches up to about 5 inches. Mattresses are placed directly on top of a geotextile filter cloth or conventional gravel filter layer. Rock-filled mattresses are flexible, and they can adapt to terrain changes easily. They are also tolerant of differential settlement, and they will continue to be fully functional if the ground settles beneath them. Overtopping water landing on the mattress fills the voids between stones and helps reduce the flow energy. Soil could be placed over the mats to support vegetative growth. For application at the base of floodwalls, special attention is needed to assure mattresses are placed with minimal gaps between adjacent units. Gaps between mattresses are weak points that could allow soil to escape if the geotextile is punctured. Advantages of rock-filled mattresses include lower cost for smaller stone, rapid installation, off-site fabrication, and the capability to remove the protection and re-use the mattresses if the levee needs to be raised. Disadvantages of rock-filled mattresses include the need for heavy equipment to lift and place the mats, potential gaps between adjacent mats and next to the floodwall, and long-term durability of the geogrid material when subjected to UV radiation. Whereas the mats could support vehicular traffic, there is a risk of damaging the geogrid material or the lacing that holds the mats together.

Articulated concrete mats. Articulated concrete mats consist of concrete block units linked together with cables made of metal or other high-strength material. Blocks can be solid or open, with gaps between adjacent blocks. Articulated concrete mats are fabricated off-site and rapidly installed using heavy lifting cranes. The concrete blocks have sufficient strength to resist the battering of overtopping jets of water, but the gaps between the blocks could allow underlying soil to erode. Therefore, these mats will be most effective if placed over a stone or gravel bedding layer sized to prevent movement of the gravel through the gaps in the mat. Articulated concrete mats are flexible and very tolerant of differential settlement. The mats are easily removed and re-used without any loss of effectiveness, and they have no problem supporting low-speed vehicular traffic. Advantages of articulated concrete mats include off-site fabrication, rapid placement, capability to cover irregular terrain, tolerance to differential settlement, and long service life. Disadvantages include the need for heavy-lift cranes during installation and providing adequately-sized gravel underlayers to prevent loss of material through gaps.

Alternative: Poured-in-Place Reinforced and Non-Reinforced Concrete

1. Manufacturer.

   No specific manufacturer.

2. Product Description.

   Poured-in-place concrete provides effective armoring of the levee crown soil on the protected side of a vertical floodwall. The concrete apron is formed, and concrete is poured in place to cover the area from the base of the floodwall protected side out a distance beyond the expected splash-down point of the overtopping jet. Concrete offers great flexibility for protecting odd-shaped areas, gaps between the floodwall and existing structures as shown in Figure 4.16, and around corners in the floodwall protection. Reinforced concrete slabs can be thinner because the reinforcing mesh resists tension loads. The slab can be tied into the floodwall using a variety of techniques. Details of reinforced and non-reinforced concrete aprons are shown on Figures 4.16 and 4.17, respectively. These specific plans are being implemented by Task Force Guardian.

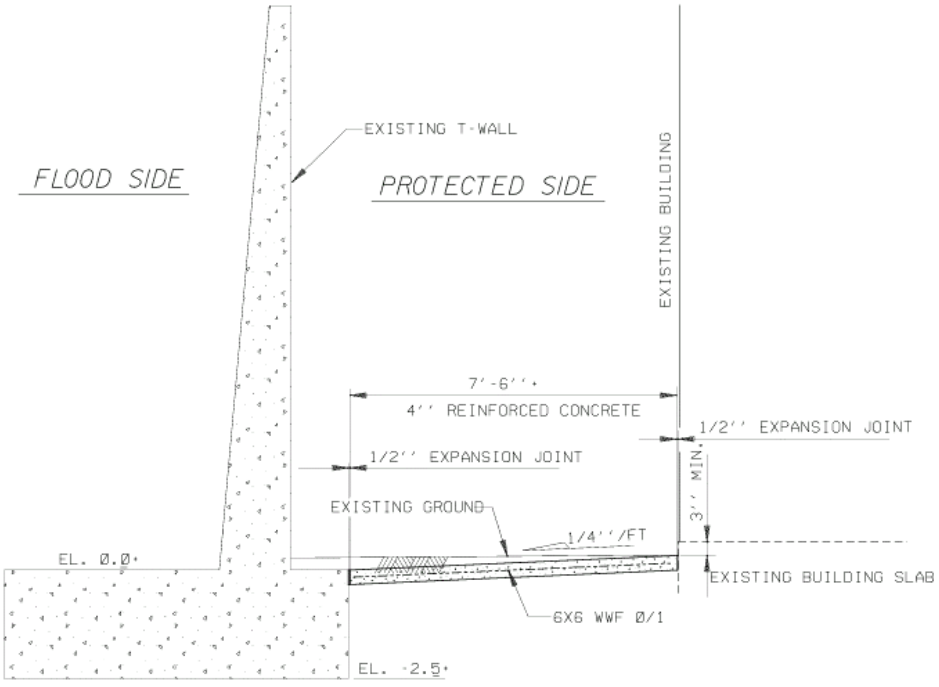

Figure 4.16. Detail of 4-inch-thick reinforced concrete apron (from URS drawing for IHNC West side)

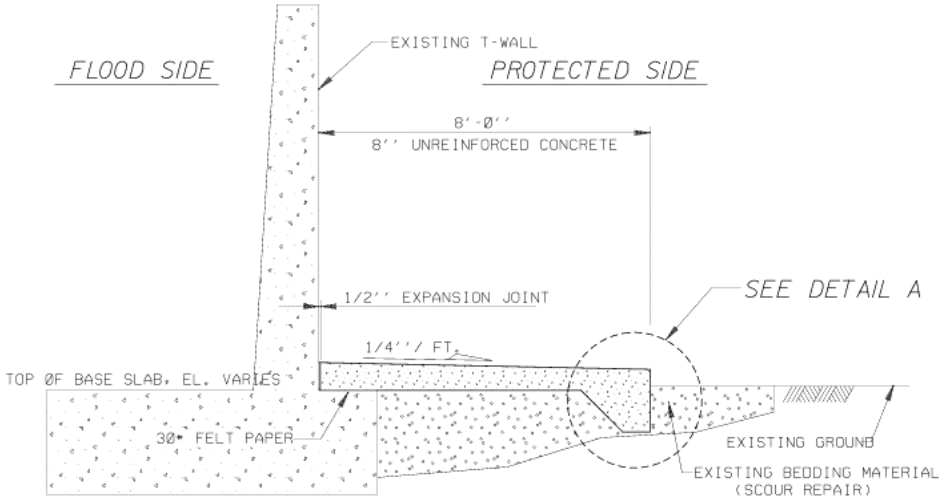

Figure 4.17. Detail of 8-inch-thick unreinforced concrete apron (from URS drawing for IHNC West side)

3. Product Functionality.

   Levee soil is protected by an impermeable, continuous, concrete slap with or without light reinforcement mesh. This provides a rigid, nearly horizontal surface that can absorb the impact of falling water and divert the overtopping jet toward the backside slope of the earthen levee.

4. Stated Applications.

   Applications of formed and poured-in-place concrete to control flow and prevent scour are wide spread and very successful. Implementations illustrated in Figures 4.16 and 4.17 are most appropriate, and these designs should be fully successful under design load conditions.

5. Potential Failure Modes and Mechanisms.

   The loads to which the concrete slab might be subjected are not well defined, and this makes design of the slab difficult. If the slab remains on firm footing with no loss of underlying material, loads generated by the falling jet of water should be transferred to the foundation. However, if the ground beneath the slab settles, there may be locations where the slab spans a void and must function like a beam. The slab will crack if the reinforcement mesh is not near the bottom, and this could lead to partial breakup of the slab. Alternately, if a portion of the slab is cantilevered by loss of supporting material at the outer edge, the reinforcement mesh is then needed near the top surface of the slab.

6. Application Limitations.

   There are few limitations on poured-in-place concrete slabs. Near full strength is attained in about one month, and strength continues to increase slowly for some time.

7. Documented Applications.

   Numerous.

8. Costs.

   Cost is a function of project location, site accessibility, coverage, slab thickness, and reinforcement. Preparation costs will vary. The experience of Task Force Guardian should provide an idea of installed costs.

9. Technical Evaluation Relative to Performance Criteria.

   a) Survivability Criteria. Concrete has excellent survivability characteristics. Properly designed slabs should withstand the dynamic forces, and the relatively short duration of overtopping events precludes erosion of the concrete surface. Properly prepared concrete is durable, and it weathers well.

   b) Geotechnical Criteria. Concrete provides an impermeable barrier, so any loss of underlying soil will be at the slab boundaries or perhaps through the activities of burrowing animals. The underlying soil must provide adequate bearing capacity for the slab (and any anticipated vehicular traffic) without differential settlement.

   c) Construction/Installation Criteria. Cracks will form during the concrete curing process, so steel mesh must have sufficient coverage so corrosion does not occur. Steel corrosion will cause spalling and a reduction in slab width. Usual practices must be followed as with any poured concrete slab, e.g., water should not be added to increase the concrete flow characteristics during placement, etc. Expansion/contraction joints are necessary, and it may be advisable to tie the slab into the existing floodwall.

   d) Maintenance and Repair Criteria. Concrete requires little maintenance. If inspection indicates an area of deteriorating concrete due to corrosion of reinforcement or spalling due to poor quality materials, those sections should be cut out and replaced with new concrete.

   e) Environmental Criteria. Concrete slabs do not cause any environmental problems. Site access may disrupt the local ecology temporarily.

   f) Design Requirements. Conventional concrete slab design for typical dead and live loads is well understood and dictated by building codes. Slab resistance to the impact loading of falling water caused by wave and surge overtopping is not as well understood. An initial estimate of the total force in the water jet (per unit length along the floodwall) is provided by Figure 4.13 for the case of surge overtopping. The associated bearing pressure can be estimated using Figure 4.10 to find the jet thickness at impact. Apply the resulting pressure as a live load. It might be prudent to include a factor of safety given the uncertainty of wave overtopping loads.

10. Summary of Poured-in-Place Concrete Alternative.

a) Advantages. Advantages of poured-in-place reinforced and non-reinforced concrete include high strength and durability, readily available materials, and flexibility to vary project dimensions as needed. Where appropriate, the concrete apron can be designed as a roadway for vehicular traffic. Where site access is limited, concrete can be placed using a crane bucket or by pumping short distances.

b) Disadvantages. The main disadvantage of reinforced and non-reinfoced concrete is its relative intolerance to differential settlement. Buckled sections of the paved area are more apt to allow leaking of underlying soil. Where future plans call for addition of levee height, concrete aprons cannot be easily removed and re-used.

c) Risk and uncertainties. The suggested method for estimating the live loads due to overtopping water are approximate, and wave overtopping has not been included. The estimated load is considered a live load, but the impact force created by initial splash-down of the jet is not included in the force estimate.

Alternative: Grouted Stone Riprap

1. Manufacturer.

   No specific manufacturer.

2. Product Description.

   This protection method begins with conventional riprap armoring placed on top of a bedding layer and geotextile filter fabric. The voids in the riprap are then filled with a concrete grout mixture. The final protection is a solid, impermeable protection layer. Figure 4.18 below illustrates typical project dimensions for rehabilitation of scour holes caused by floodwall overtopping during Hurricane Katrina.

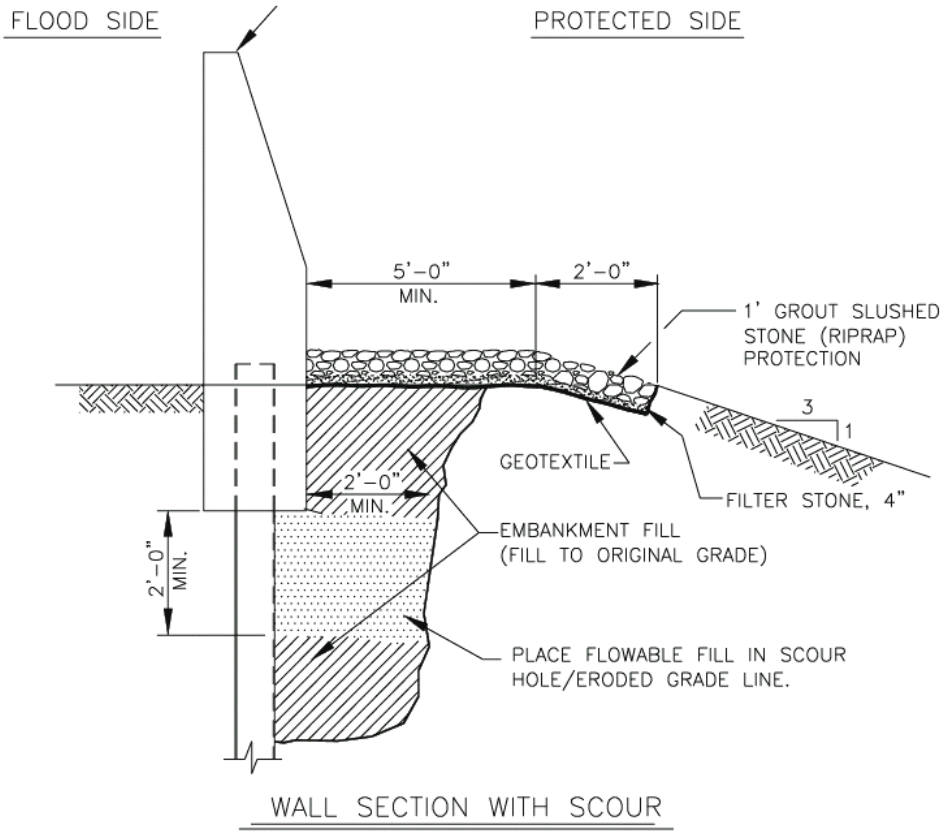

Figure 4.18. Detail of grouted stone riprap floodwall apron (from URS drawing for IHNC East side)

3. Product Functionality.

   The purpose of the grout is to solidify the riprap protection into a solid, continuous, impermeable structure, and to prevent loss of individual stones when impacted by the falling water jet. Whereas the grouted riprap might support vehicular traffic, the risk

of damage is too great, and vehicles should be banned from driving on the protection. The underlying soil is shielded from the forces of falling water, and the only loss of soil might occur at the project boundaries if steps are not taken to prevent erosion.

4. Stated Applications.

   Grouted riprap has been used successfully at numerous locations as protection against water flowing parallel to the armoring. It is not known whether or not grouted riprap has been used where high quantities of overtopping water are expected to impact with forces normal to the slope.

5. Potential Failure Modes and Mechanisms.

   Because the grout mixture has minimal strength in tension, grouted stone riprap will have little tolerance for differential settlement of the underlying levee crown soil. Once the bond between adjacent stones is broken, riprap stones can be dislodged by the overtopping flow, and this could start an unraveling of the protection. Poor quality grout will be ineffective and easily broken by the force of water impact. Deterioration of grouted riprap is expected to occur more rapidly than for concrete slabs. Grouted riprap will not expand and contract with temperature change as much as concrete, but expansion and contraction might cause the grout to crack and break.

6. Application Limitations.

   Grouted riprap should not be used where foundation conditions cannot support the weight of the protection or where different soil types might cause differential settlement of the monolithic protection. It would be advisable to have expansion/contraction joints between the riprap and the floodwall, and expansion/contraction joints perpendicular to the floodwall at given spacing.

7. Documented Applications.

   The report authors are not aware of documented cases of grouted riprap used where the protection must resist high volumes of falling water, but that does not mean such applications do not exist. Grouted riprap has been successful in numerous other applications where water flows parallel to the protection.

8. Costs.

   Costs for grouted riprap are unknown, but the experience of Task Force Guardian's implementation of similar protection in the reconstruction of damaged levees and floodwalls in New Orleans should provide sufficient cost guidance.

9. Technical Evaluation Relative to Performance Criteria.

   a) Survivability Criteria. Survivability of grouted riprap to protect foundation soils against surge and wave overtopping is not proven. The main weakness is the inability of the grout to withstand tensile stresses, and the possibility of individual stones breaking free and becoming dislodged. The long-term

durability of grouted riprap will be a function of foundation stability and quality of the cement grout.

b) Geotechnical Criteria. The foundation soil must be strong and well compacted to prevent differential settlement. Steps must be taken at the protection boundaries to prevent erosion of supporting soil. This is critical where the riprap ends on the protected side of the earthen levee. Water flowing down the slope will erode the soil as it passes over the terminus of the grouted riprap.

c) Construction/Installation Criteria. Dumped riprap must be checked for good distribution of riprap material sizes. Avoid hotspots where there is a congregation of smaller stones. Grout must be of high quality and only fluid enough to assure that all the voids in the riprap are filled.

d) Maintenance and Repair Criteria. Sections of grouted riprap can be repaired by replacement of the damaged section. However, this patched area will not be well tied into the neighboring intact section, and this might cause a weakness in the protection.

e) Environmental Criteria. Grouted riprap does not cause any environmental problems.

f) Design Requirements. Guidance on the design and construction of grouted riprap revetments is given in the Corps of Engineers' Technical Letter, "Design and Construction of Grouted Riprap" (Corps of Engineers, 1992).

10. Summary of Riprap Alternative.

a) Advantages. Advantages of grouted stone riprap are ease of installation, capability to protect varying terrain, and easy removal for future increases in levee height. However, the removed riprap is not readily re-usable because much of the grout will remain intact. Grouting provides increased stability for riprap that would be dislodged by the overtopping flow.

b) Disadvantages. The main disadvantage of grouted stone riprap is the uncertainty associated with the long-term integrity of the grout/stone bonds if there is any ground settlement. Also, cracks will form around larger stones, and this could lead to gradual deterioration of the grout bonding.

c) Risk and uncertainties. The main uncertainty of grouted riprap is its resistance to large impact forces associated with overtopping jets of water. There is little evidence of grouted riprap being used for this particular application.

Alternative: Rock-Filled Mattresses

1. Manufacturer.

   Marine Mattress
   Tensar Earth Technologies, Inc.
   5883 Glenridge Drive
   Suite 200
   Atlanta, GA 30328-5363
   (888) 828-5126 Toll Free
   (404) 250-1290 International
   (404) 250-0461 Fax
   www.tensarcorp.com

2. Product Description.

   Rock-filled mattresses, often referred to as marine mattresses, are containers fabricated of geogrid material and filled with small rocks varying in size from 2 inches up to about 5 inches. Mattresses are placed directly on top of a geotextile filter cloth or conventional gravel filter layer. Rock-filled mattresses can be fabricated and filled off-site and transported by truck or barge to the job site. Mattresses dimensions are typically 5-ft wide and up to 35 ft long. Depending on the application, mattress thickness can be as little as 4 inches or as large as 2 ft. For application as floodwall overtopping protection mattress thickness should probably be at least 6 inches thick.

3. Product Functionality.

   Rock-filled mattresses are flexible, and they can adapt to terrain changes easily. They are also tolerant of differential settlement, and they will continue to be fully functional if the ground settles beneath them. Overtopping water landing on the mattress fills the voids between stones and helps reduce the flow energy. Soil could be placed over the mattresses to support vegetative growth. The surface of a rock-filled mattress is not intended for vehicular traffic, and the surface may become a slipping hazard if placed on a slope.

4. Stated Applications.

   Rock-filled mattresses have been used as revetments, scour protection, foundation mats, and for protection at culverts and bridge abutments. The writers are not aware of any applications where rock-filled mattresses were intended to resist the forces of water impacting normal to the mattress.

5. Potential Failure Modes and Mechanisms.

   Rock-filled mattresses fail if the supporting container is breached either by failure of the geogrid material or by failure of the lacing and connectors used to construct the cage. The geosynthetic materials used to construct the mattresses are treated against UV radiation, but the long-term (tens of years) durability of the material is unknown.

Mattress protection can also fail if the mattress is lifted by the hydrodynamic forces and displaced laterally as a unit. This might occur if the mattress is too thin relative to the lifting force. Erosion might occur at the mattress boundaries, but the flexible nature of the mattress allows it to slump into any scour hole and continue to provide a reasonably high degree of functionality.

6. Application Limitations.

Rock-filled mattresses add a considerable weight to the levee crown, and they should not be used where foundation soils cannot bear the additional weight. Heavy equipment is required for installation, so site access is a critical issue.

7. Documented Applications.

Numerous field applications including USACE applications as breakwater and revetment foundation support, contaminated sediment cap, and streambank protection. See U.S. Army Engineers Technical Note ERDC/CHL CHETN-III-72, "Uses of Marine Mattresses in Coastal Engineering" (available at http://cirp.wes.army.mil/cirp/cetns/chetn-iii-72.pdf). There are no documented applications where mattresses were expected to resist the impact forces of falling water. However, marine mattress have been reported to be stable as revetments in waves as high as 8 ft. This condition could have generated breaking wave impacts similar to the impact of surge overtopping a floodwall.

8. Costs.

Initial cost estimates can be derived from the table below that was reproduced from the above-cited Technical Note. Installed costs for rock-filled mattresses depend on such factors as application, proximity and cost of rock-fill material, site accessibility, placement method (land-based or from barge), availability of equipment, and project size.

Table 1 Installed Mattress Cost per Square Foot

Application	Mattress Placement	Mattress Thickness	Cost per square foot
Breakwater construction	In water	12 in.	$15
Riverbank revetment	On land	12 in.	$10
Revetment foundation	In water	6 in.	$13

9. Technical Evaluation Relative to Performance Criteria.

a) Survivability Criteria. Rock-filled mattresses should be capable of withstanding the forces of surge and waves overtopping a vertical floodwall; however, this aspect has never been tested to the knowledge of the report authors. The one

weakness might be where adjacent mattresses abut if any gaps are allowed. Water hitting any gaps could rupture the underlying geotextile filter fabric and allow soil to erode. Long-term durability depends on the effectiveness of the geogrid and lacing material UV resistance. Mattresses covered with a layer of vegetated soil should have excellent service life.

b) Geotechnical Criteria. Rock-filled mattresses are heavy, and the levee soil must be able to support the weight of the armoring system. However, the system will probably weigh less than comparable grouted riprap solutions. The flexible nature of the mattress allows them to adapt to differential settlement or local losses of underlying soil. Mattress deployment requires minimal compacting of soil, and soil surface preparation requirements are minimal beyond grooming of the soil in preparation for covering with filter cloth.

c) Construction/Installation Criteria. For application at the base of floodwalls, special attention is needed to assure mattresses are placed with minimal gaps between adjacent units. Gaps between mattresses are weak points that could allow soil to escape if the geotextile is punctured. Mattresses are placed by heavy cranes, and adequate site access is needed. Placement from barges is also an option.

d) Maintenance and Repair Criteria. Ruptures to the mattress containers can be repaired in-situ using a patching technique. Extensive mattress damage is repaired by removing the entire mattress and replacing with a new unit.

e) Environmental Criteria. There are no environmental impacts associated with rock-filled mattresses.

f) Design Requirements. There is ample guidance related to mattress fabrication for best service life, but no design guidance exists suggesting appropriate mattresses thicknesses to resist a given overtopping water force load.

10. Summary of Rock-Filled Mattress Alternative.

a) Advantages. Advantages of rock-filled mattresses include lower cost for smaller stone, rapid installation, off-site fabrication, and the capability to remove the protection and re-use the mattresses if the levee needs to be raised.

b) Disadvantages. Disadvantages of rock-filled mattresses include the need for heavy equipment to lift and place the mats, potential gaps between adjacent mats and next to the floodwall, and long-term durability of the geogrid material when subjected to UV radiation.

c) Risk and uncertainties. Behavior of rock-filled mattresses when subjected to the forces of overtopping water is largely unknown. Whereas the mats could support vehicular traffic, there is a risk of damaging the geogrid material or the lacing that holds the mats together if vehicular traffic is allowed.

Alternative: Articulated Concrete Mats

1. Manufacturer.

   Several commercial manufacturers. For example…

   ARMORTEC
   Mid-South Regional Manager
   301 Pascoe Boulevard
   Bowling Green, KY 42104
   Phone: 270-843-4659
   Mobile: 270-535-3539
   Fax: 270-783-8959
   E-Mail: dbkees@armortec.com

   Submar, Inc.
   805 Dunn Street
   Houma, LA 70360
   Email: submar@submar.com
   Phone: 985-868-0001
   Fax: 985-851-0108
   Toll free: 800-978-2627

   The Mat Sinking unit of the Corps of Engineers produces articulated concrete mats annually for bank protection on the Mississippi River.

2. Product Description.

   Articulated concrete mats consist of concrete block units linked together with cables made of metal or other high-strength material. Mattress thickness varies between manufacturer and intended application with the thickness range between about 5 to 12 inches. Articulated concrete mats are fabricated off-site and rapidly installed using heavy lifting cranes. Mattresses are laid over a filter layer, typically a geotextile fabric, and adjacent mattresses are interlocked or cabled together to form continuous coverage.

3. Product Functionality.

   The cabling between blocks serves two purposes: (1) the cabling holds the blocks together so they can be lifted as a unit for placement, and (2) the cabling provides additional mattress stability and prevents loss of individual blocks. The concrete blocks have sufficient strength to resist the battering of overtopping jets of water, but the gaps between the blocks could allow underlying soil to erode. Therefore, these mats will be most effective if placed over a stone or gravel bedding layer sized to prevent movement of the gravel through the gaps in the mat. The mats are strong, durable, and they have no problem supporting low-speed vehicular traffic.

4. Stated Applications.

   Articulated concrete mats have been used in a wide variety of applications related to protecting soils from flowing water. They are even appropriate as protection against small waves. It is not readily apparent if concrete mats have been used specifically to resist the forces of overtopping water impact normal to the mat. For use as foundation armoring near the protected-side base of vertical floodwalls, perhaps the most appropriate mat would be similar to those constructed by the Corps' mat-sinking unit. These mats have larger rectangular concrete blocks with fewer gaps. The mats are not as flexible as some of the commercial mats, but this particular application is mostly flat, narrow areas without terrain variation (in contrast to the need for articulation at levee transitions).

5. Potential Failure Modes and Mechanisms.

   Concrete mats should have sufficient self-weight to prevent lifting and lateral shifting. Anchoring is an option for the mats. The main concern is loss of underlying soil through gaps, even if covered with a geotextile that could be breached by the falling water impact. For this reason it is advisable to use mats with larger concrete area and smaller gap area. Mats should be placed over a gravel filter layer with stone sizes greater than the gap width. Cable breakage could result in block displacement and erosion of soil in a localized area, but the damage is not likely to spread without wholesale cable breakage.

6. Application Limitations.

   Foundation soils must be able to support the additional weight of the mats. Coverage pattern (long dimension parallel or perpendicular to the wall) will be dictated by the particular mat geometry.

7. Documented Applications.

   There are numerous successful applications of articulated concrete mattresses used to protect against flow parallel to the mat, including the experience of the Corps of Engineers' Mat Sinking Unit. Experience related to water forces applied normal to the mats is limited to breaking of small waves. Very heavy mats may have been used to prevent scour at dam spillways.

8. Costs.

   Typical costs were unavailable at the time of this writing.

9. Technical Evaluation Relative to Performance Criteria.

   a) Survivability Criteria. Articulated concrete mats are expected to have good survivability characteristics during short-term overtopping events. Even if some of the underlying soil is lost during an extreme event, the mattress protection retains most of its functionality. The mats are very durable over the long term with corrosion of the cabling being the only concern.

b) Geotechnical Criteria. The underlying soil must be able to support the mattress weight without undue differential settlement, and the geotextile filter fabric must provide continuous coverage to retain the soil while relieving built-up pore pressure. The smallest stones in the bedding layer must be larger than the gaps between the concrete blocks.

c) Construction/Installation Criteria. Mattresses are fabricated off-site and delivered by flatbed trucks (or barges) to the site. The mattresses require heavy equipment for installation. When placing the mattresses special attention should be given to minimizing gaps between adjacent mats so bedding stone is not lost.

d) Maintenance and Repair Criteria. Generally, articulated concrete mats require no maintenance. If differential settlement becomes problematic, individual mats can be lifted out, and fill soil can be added and compacted before replacing the mat. If mattress cabling corrodes, the entire mattress can be replaced.

e) Environmental Criteria. Installation of articulated concrete mattresses does not cause any adverse environmental consequences. Mattresses do have aesthetic appeal versus riprap protection.

f) Design Requirements. Individual manufacturers provide design information and installation guidelines. The most important parameter is appropriate mattress thickness because this influences the installed cost of the protection. Unfortunately, no guidance exists at present to make this determination.

10. Summary of Articulated Concrete Mat Alternative.

a) Advantages. Advantages of articulated concrete mats include off-site fabrication, rapid placement, capability to cover irregular terrain, tolerance to differential settlement, and long service life. The mats are easily removed and re-used without any loss of effectiveness.

b) Disadvantages. Disadvantages of articulated concrete mats include the need for heavy-lift cranes during installation and providing adequately-sized gravel underlayers to prevent loss of material through gaps.

c) Risk and uncertainties. As with all the alternatives for protecting the base of floodwalls, the greatest unknown is how the system responds to high impacts of overtopping surge and waves.

References

Corps of Engineers. 1992. "Design and Construction of Grouted Riprap," Engineering Technical Letter No. 1110-2-334, U.S. Army, Corps of Engineers, Washington, D.C.

Chow, V. T. 1959. *Open-Channel Hydraulics*, McGraw-Hill Book Co., New York.

Henderson, F. M. 1966. *Open Channel Flow*, MacMillian Publishing Co., Inc., New York.

Hoffmans, G. J., and Verheij, H. J. 1997. *Scour Manual*, A.A. Balkema, Rotterdam.

Milne-Thompson, L. M. 1960. *Theoretical Hydrodynamics*, MacMillian Publishing, Inc., New York.

Morris, H. M. 1963. *Applied Hydraulics in Engineering*, The Ronald Press Co., New York.

Rouse, H. 1961. *Fluid Mechanics for Hydraulic Engineers*, Dover Publications, Inc., New York.

Seed, R. B., Nicholson, P. G., Dalrymple, R. A., Battjes, J. A., Bea, R. G., Boutwell, G. P., Bray, J. D., Collins, B. D., Harder, L. F., Headland, J. R., Inamine, M. S., Kayen, R. E., Kuhr, R. A., Pestana, J. M., Silva-Tulla, F., Storesund, R., Tanaka, S., Wartman, J., Wolff, T. F., Wooten, R. L., and Zimmie, T. F. 2005. "Preliminary Report on the Performance of the New Orleans Levee Systems in Hurricane Katrina on August 29, 2005," Report No. UCB/CITRIS-05/01, American Society of Civil Engineers, National Science Foundation, and Center for Information Technology Research in the Service of Society.

E. T-WALL DESIGN EXAMPLES

The following three design examples illustrate the application of the T-Wall Design Procedure outlined in Section 3.4.3 of the Design Guidelines. These examples are provided to help users understand the step-by-step procedure. Nothing presented here shall supersede sound engineering design and judgment.

Design Example #1

A cross section of the wall section used for Example 1 is in Figure 1, based on a wall constructed in New Orleans. The water level used in this example is elevation 10.0. The soil information for this example is shown in Figure 2.

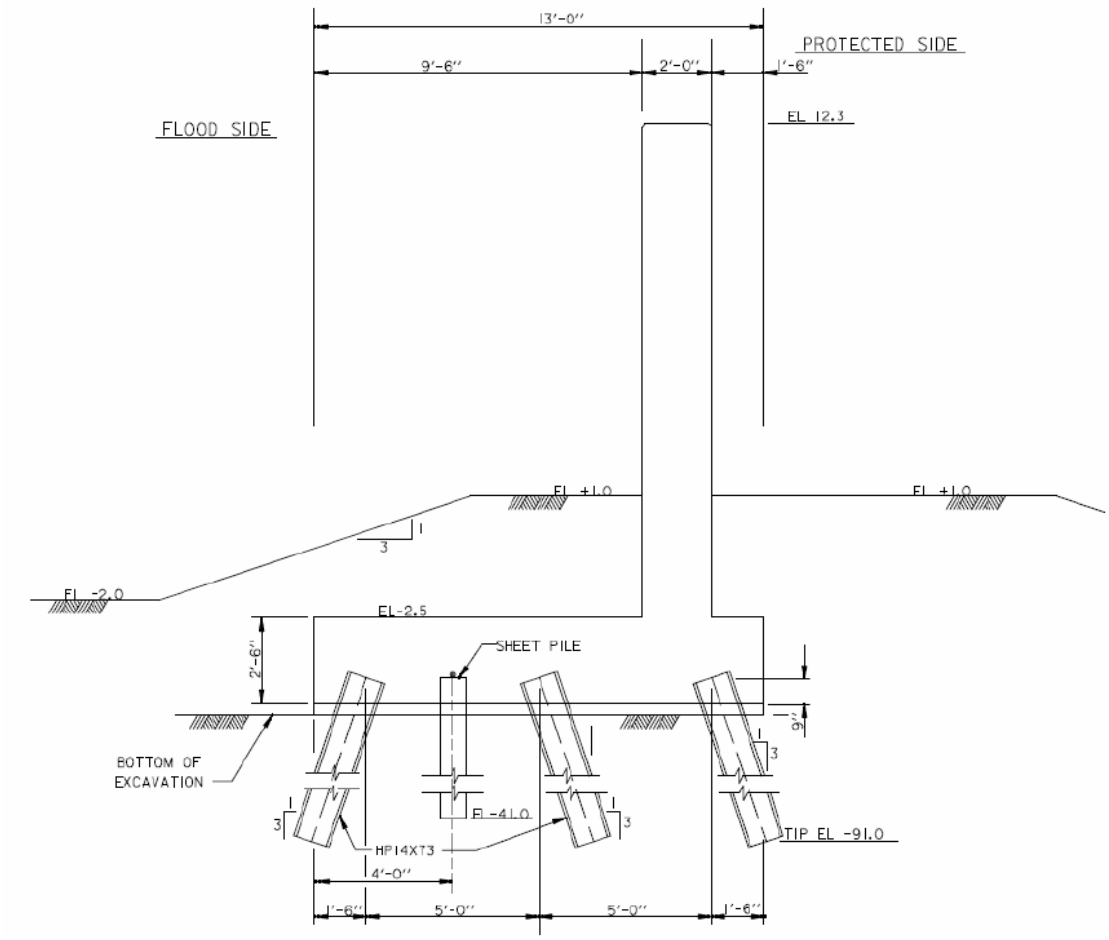

Figure 1. Wall Geometry.

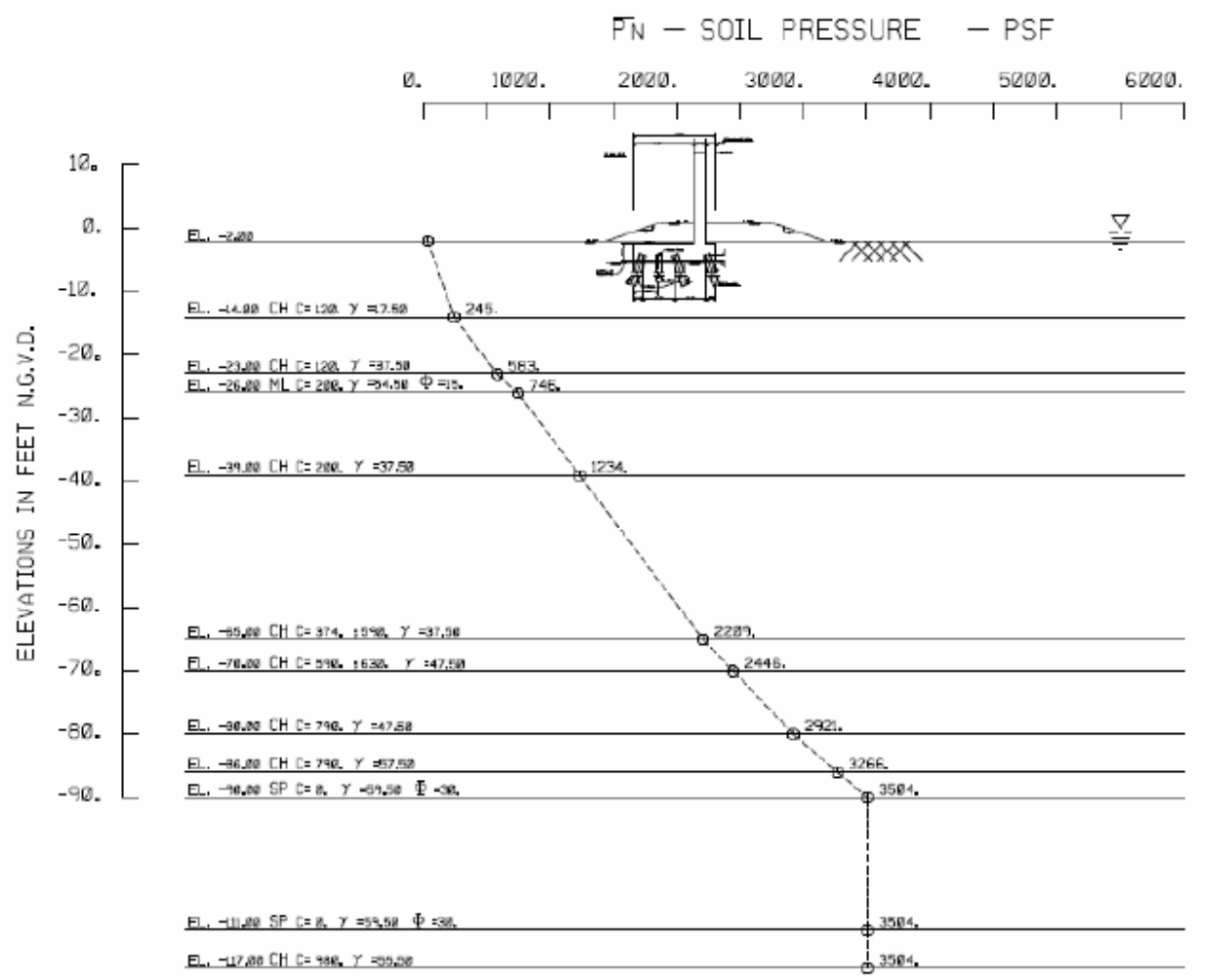

Figure 2. Soil Profile.

Step 1 Initial Slope Stability Analysis

Perform a Spencer's method slope stability analysis to determine the critical slip surface with the water load only on the ground surface and no piles. UTexas4 was used in this example for all of the slope stability analysis. For the design example, the critical failure surface is shown in Figure 3 where the factor of safety is 1.02. Because this value is less than the required value of 1.5, the T-Wall will need to carry an unbalanced load in addition to any loads on the structure.

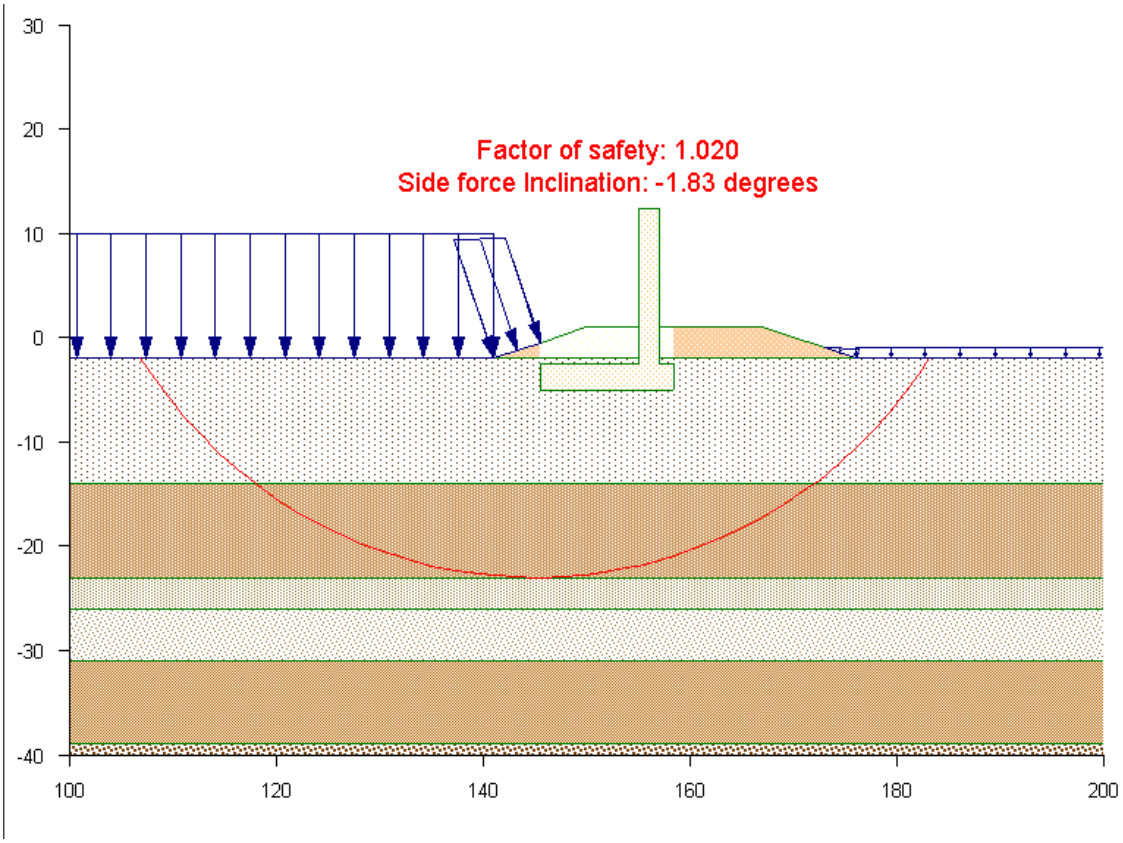

Figure 3. Spencer's analysis of the T-Wall without piles.

Step 2 Unbalanced Force Computations

Determine (unbalanced) forces required to provide the required global stability factor of safety. The critical failure surface extends down to elevation -23' in this example. The top of the soil near the heel is elevation -0.5'. It is assumed that the unbalanced load is halfway between these two elevations. Apply a line load at elevation -11.75, at the x-coordinate of the critical failure surface in Figure 3. After several iterations, a line load of 4,575 lb/ft was found that results in FS = 1.50, as shown in Figure 4.

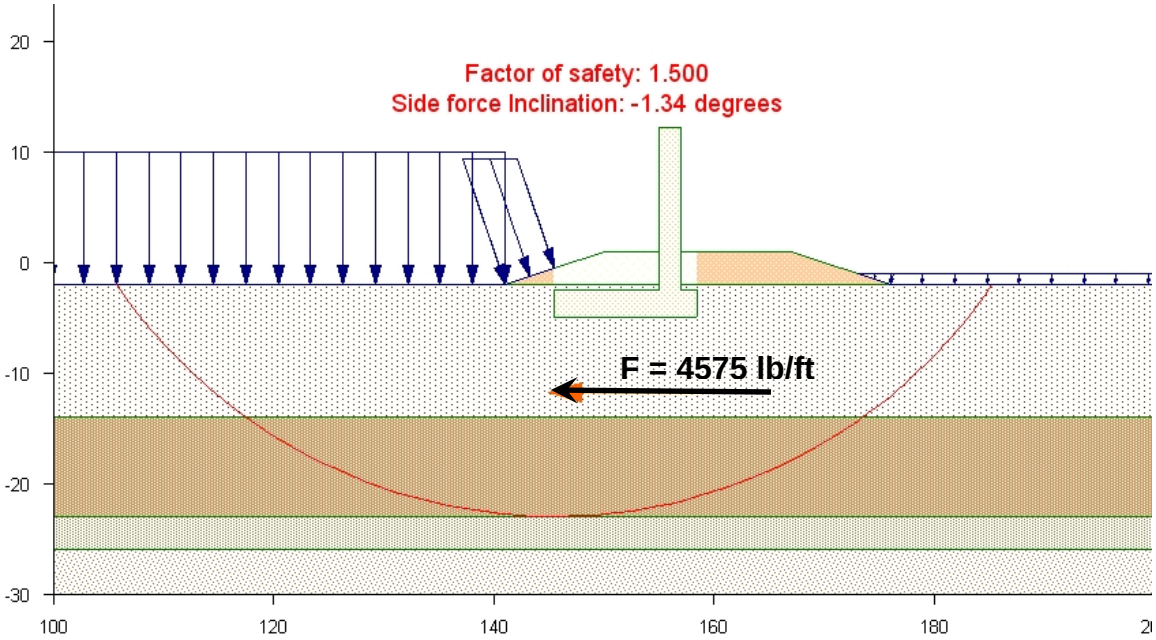

Figure 4. Spencer's analysis of the T-Wall with an unbalanced load to increase global stability.

It should be noted that a search for the critical failure surface was performed with the unbalanced load shown in Figure 4. The search ensures that if the pile foundation of the T-Wall can safely carry the unbalanced load in addition to any other loads on the structure, the global stability will meet the required factor of safety. The UTexas4 input files for Figures 3 and 4 are attached at the end of this example.

Step 3 Allowable Pile Capacity Analysis

3.1 For the preliminary analysis, allowable pile capacities determined by engineers in New Orleans District for the original design of this project are used.

Allowable Compression Load = 74 kips
Allowable Tensile Load = 49 kips

See Figure 5 for ultimate loads vs. depth from a compression pile load test. The compression load above was computed using a factor of safety of 2.0 at a depth of 92 feet. For this test, a casing used precludes skin friction above the critical failure surface.

The tension load is taken from calculated values shown in Figure 6. At elevation -92 feet the ultimate load is calculated to be about 81 tons. The capacity above elevation -23 is about 7 tons. Therefore, the tension capacity can be estimated as 81-7 = 74 tons. Using a safety factor of 3 (no load test), the allowable capacity is 74(2)/3) = 49 kips.

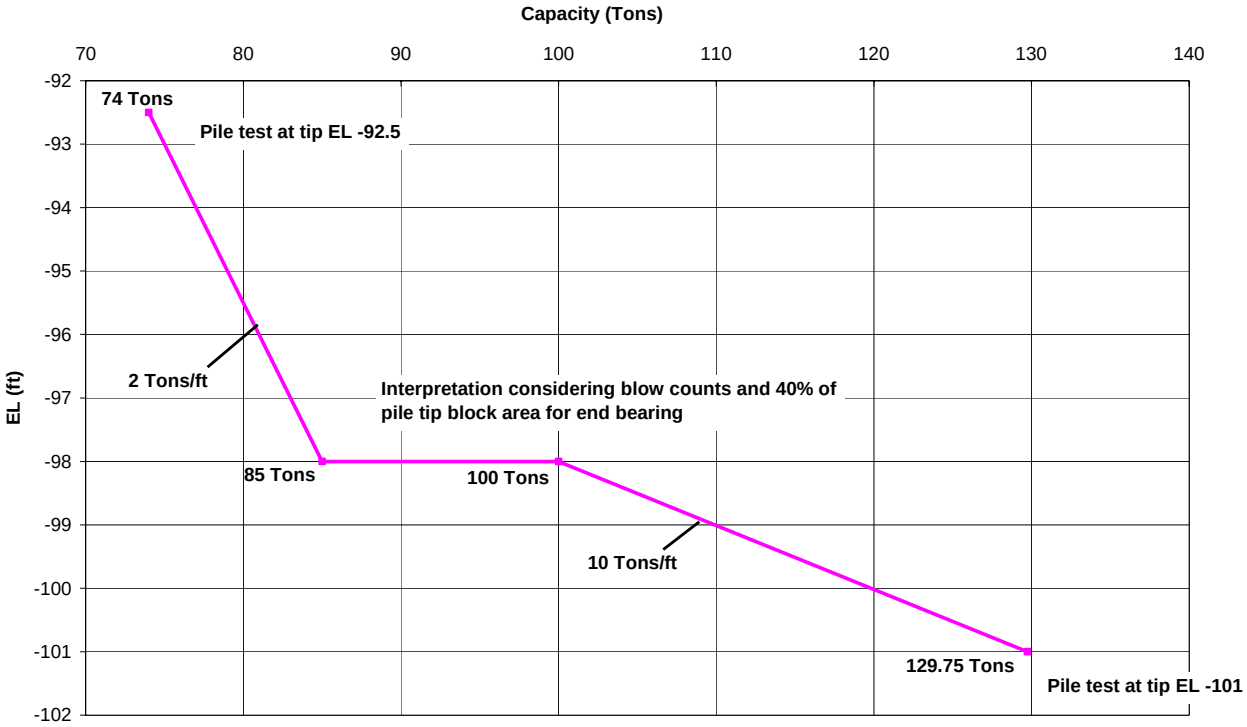

Figure 5. Pile Load Test Data

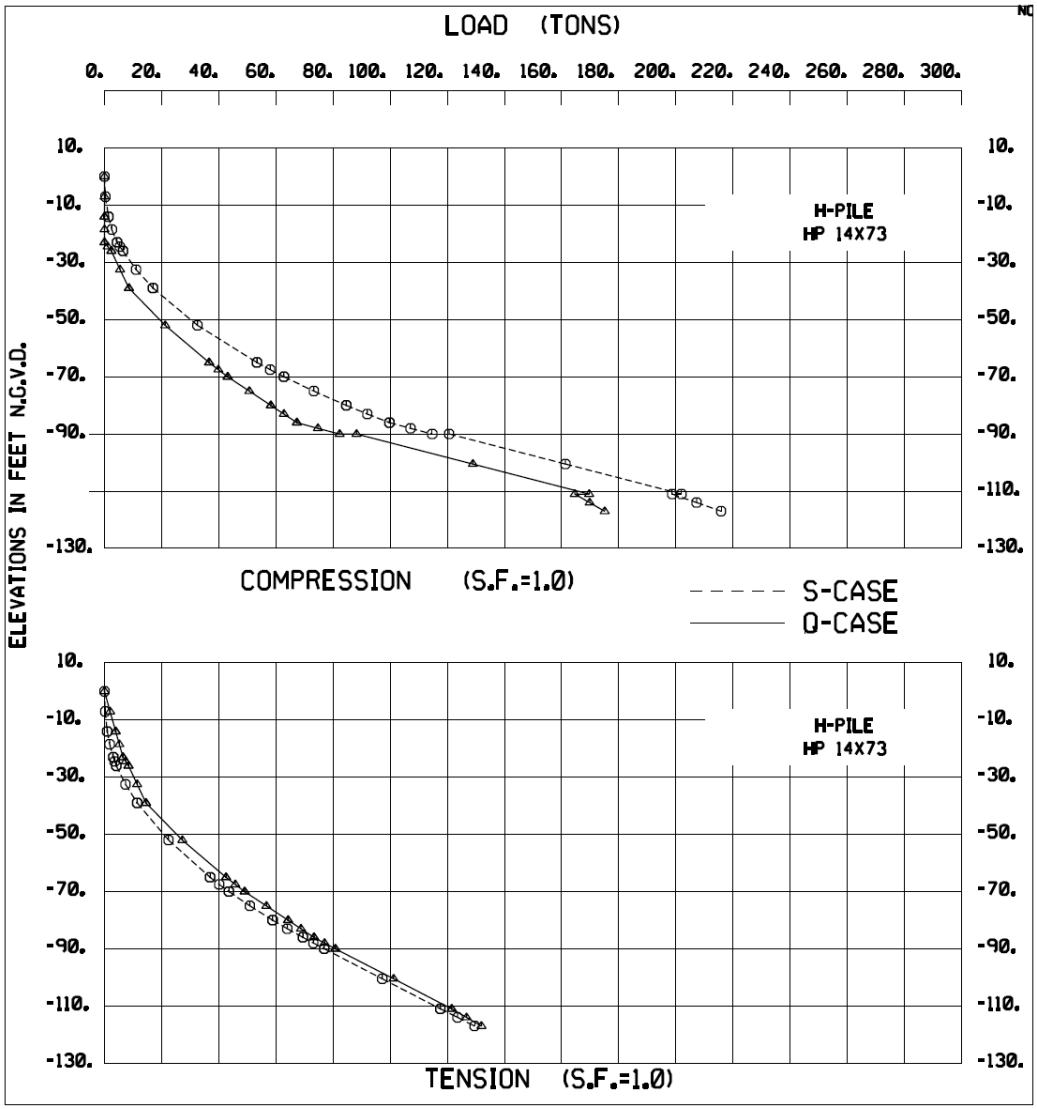

Figure 6. Ultimate Axial Capacity with Depth, Calculated

3.1 Alternate Method. If load tests are not performed, or allowable capacities computed from an ultimate strength method like APile or CAXPile, the axial pile capacities can be determined using TZPILE analyses that simulate lateral and axial pile load tests. The soil profiles used in these analyses are presented in Figure 7. The depth scale is in inches. The simulated load tests (after stripping off the top two layers) were performed at Elevation -23 which is the lowest elevation of the critical circle from Step 1.

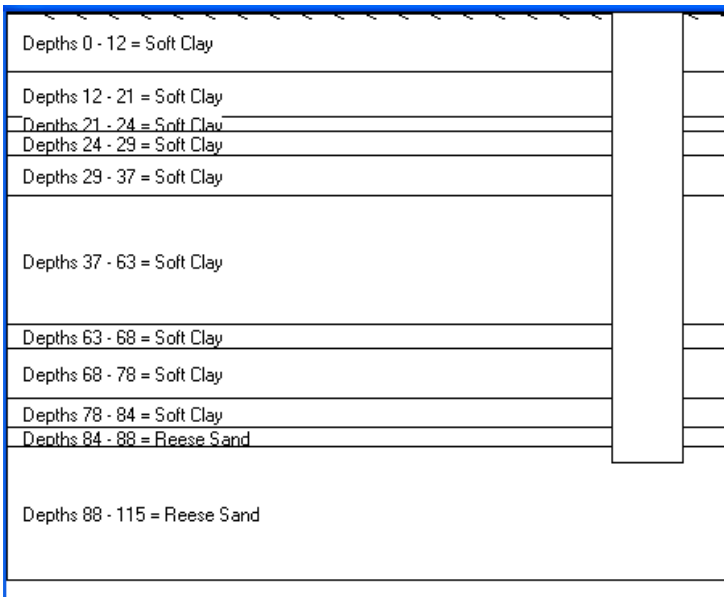

Figure 7. Soil Profiles - Stripped to critical surface of minus 23 for TZPILE and LPILE analysis

A plot of the TZPILE compression load versus settlement (at the pile head) is presented in Figure 8. The allowable compressive load is 58 kips based on and ultimate load of 174 kips and a factor of safety equal to 3.0 (assuming no pile load tests will be performed and no load case related reductions are applicable). Note that the ultimate of 174 kips (87 tons) is approximately equal to the pile capacity curves in Figure 5.

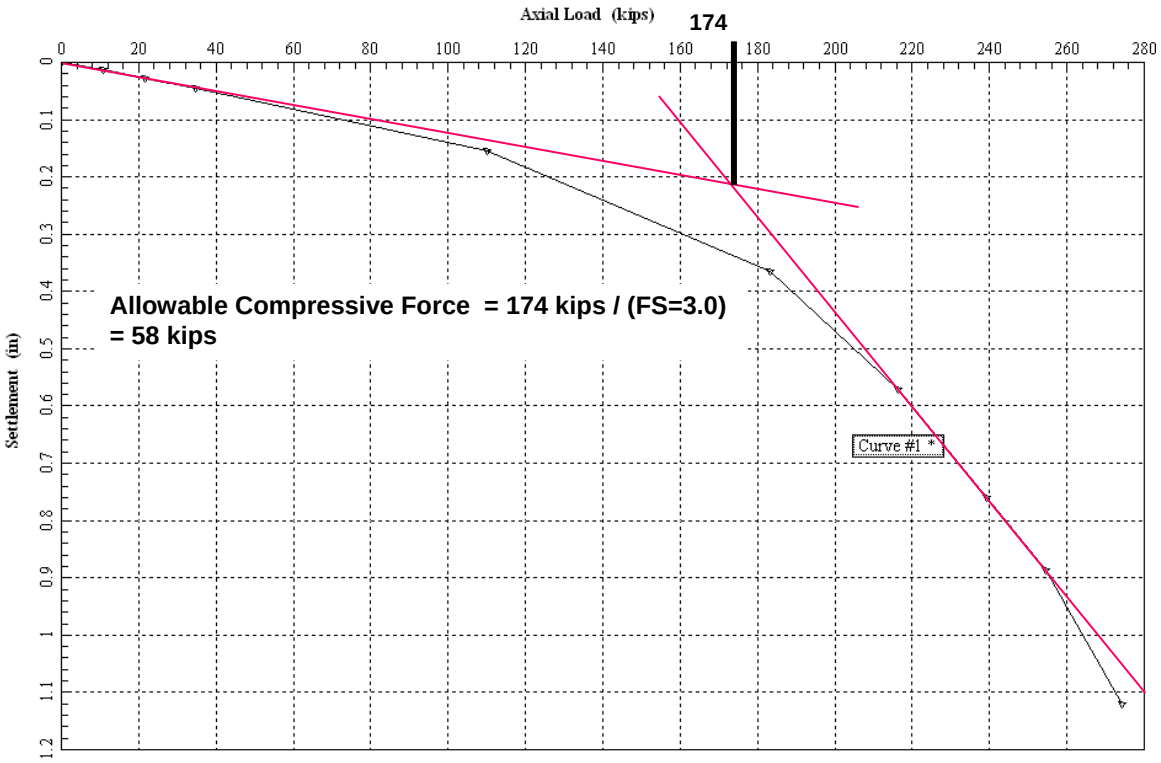

Figure 8. TZPILE Axial Pile Analysis Compression Settlement vs Axial Load Plot for determination of allowable compressive loads in piles by load simulation method.

Similarly, the allowable tensile capacity for a pile can be determined from analysis using the load simulation method. As shown in Figure 9, the ultimate tensile capacity is computed to be 84 kips. The allowable tensile capacity is determined by dividing the ultimate load by the factor of safety of 3.0 (assuming no pile load tests were performed and no load case related reductions are applicable). Thus, the allowable tensile load is 28 kips. This is less than the tension load computed above, but is presented as an example only and is not used in later design. Most likely there is a discrepancy in assumptions in stratigraphy or ultimate strength.

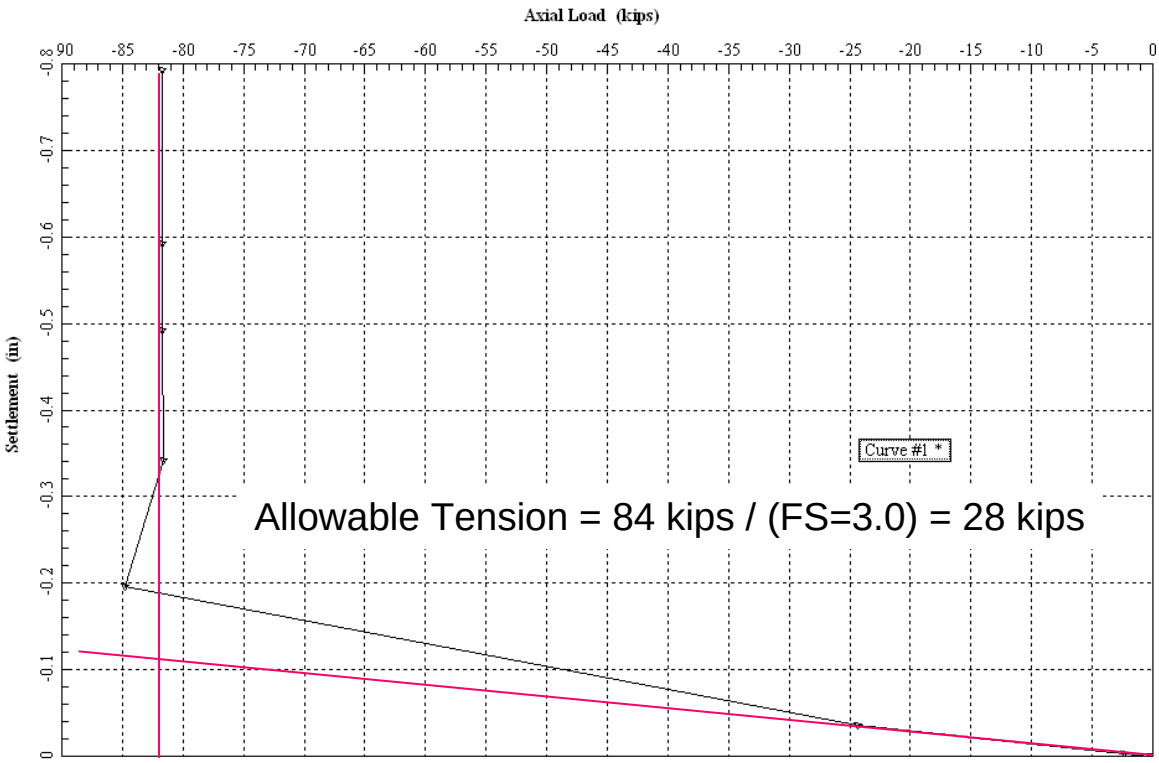

Figure 9. TZPILE Axial Pile Analysis TENSION Settlement vs Load Plot for allowable tensile loads in Piles

3.2 The allowable shear load (from LPILE) is determined from pile head deflection versus lateral load plot on Figure 10. The ultimate load was determined to be 24.5 kips. The allowable load is determined to be 8.2 kips after dividing by the factor of safety of 3.0.

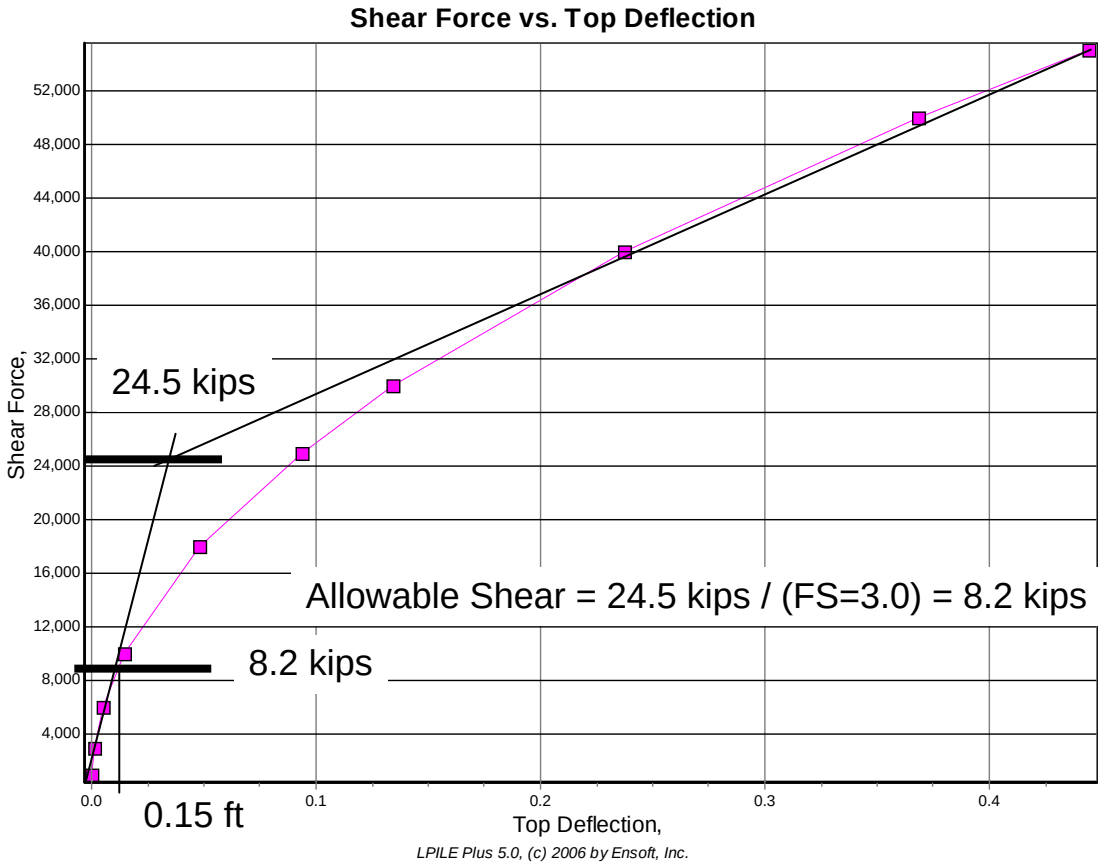

Figure 10. LPILE analysis of Pile head deflection vs shear force at critical surface to determine allowable shear force in piles.

Table 1 tabulates the allowable loads for axially loaded compressive and tensile piles,

Table 1. Allowable Axial and shear loads	
Type	Force (kips)
Axial Compressive	74
Axial Tensile	54
Shear	8.2

Step 4 Initial T-wall and Pile Design

4.1 Use CPGA to analyze all load cases and perform a preliminary pile and T-wall design. The unbalanced force is converted to an "equivalent" force applied to the bottom of the T-wall, $F_{cap,}$ as calculated as shown below (See Figure 11):

$$F_{cap} = F_{ub}\left[\frac{\left(\frac{L_u}{2}+R\right)}{\left(L_p+R\right)}\right]$$

Where:

F_{ub} = unbalanced force computed in step 2.
L_u = distance from top of ground to lowest el. of critical failure surface (in)
L_p = distance from bottom of footing to lowest el. of crit. failure surface (in)

$$R = \sqrt[4]{\frac{EI}{Es}}$$

E = Modulus of Elasticity of Pile (lb/in^2)
I = Moment of Inertia of Pile (in^4)
Es = Modulus of Subgrade Reaction (lb/in^2) below critical failure surface. In New Orleans District this equates to the values listed as K_HB.

For the solution:
Piles = HP 14x73. I = 729 in^4, E = 29,000,000 psi

Soils – Importance of lateral resistance decreases rapidly with depth, therefore only first three layers are input – with the third assumed to continue to the bottom of the pile. The parameters were developed from soil borings from the New Orleans District shown in Figure 12.

Silt, ϕ = 15, C = 200 psf, γ_{sat} = 117 pcf, K_HB ave. = k =167 psi
Clay 1, ϕ = 0 , C = 200 psf, γ_{sat} = 100 pcf, K_HB = k = 88.8 psi
Clay 2, ϕ = 0 , C = 374 psf, γ_{sat} = 100 pcf, K_HB = k = 165.06 psi

The top layer of silt under the critical failure surface is stiffer but only three feet thick. Will use a k = 100 psi.

R therefore is equal to 121 in = 10.08 feet

P_{cap} = 4,575 * (22.5/2 + 10.08) / (18 + 10.08) = 3,475 lb/ft

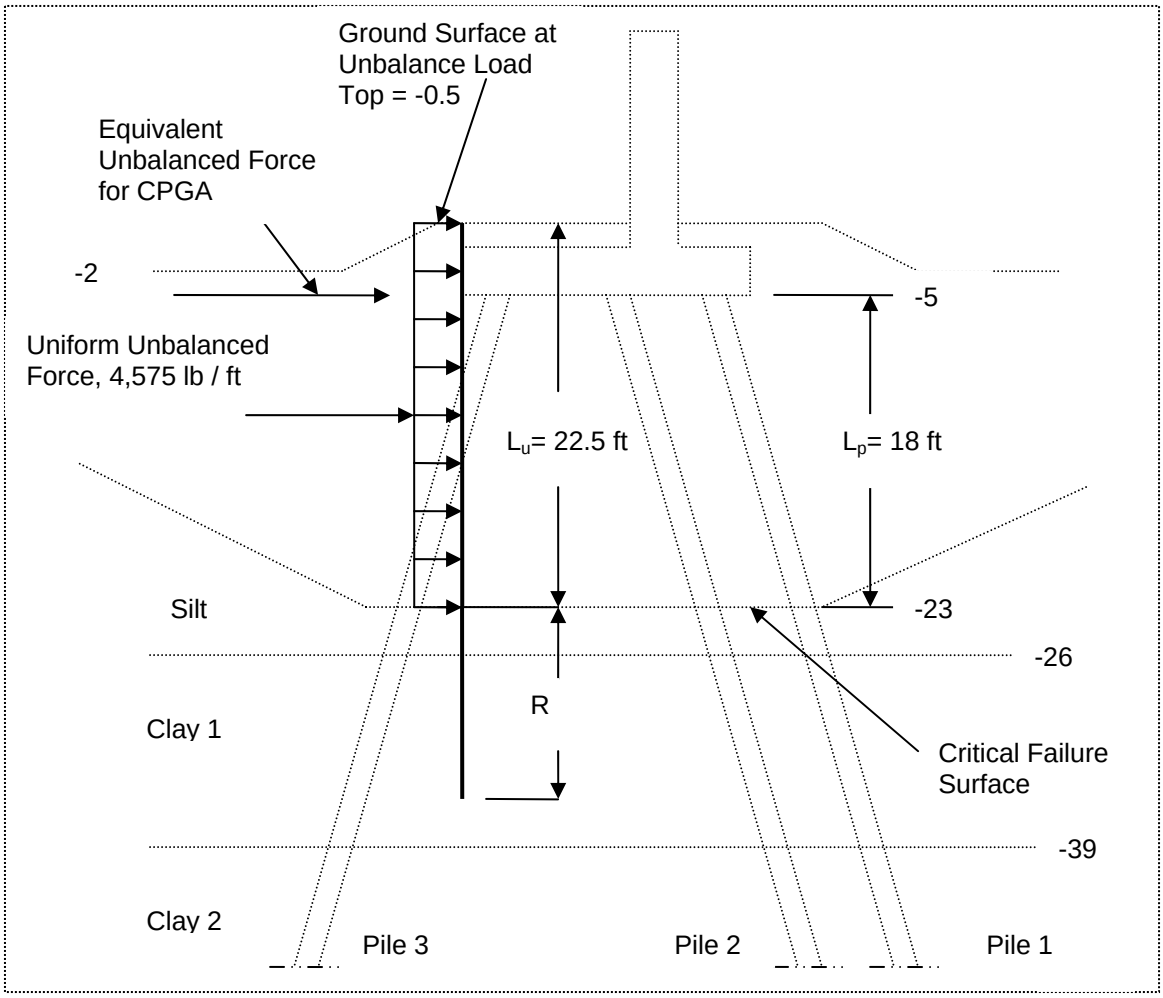

Figure 11. Equivalent Force Computation for Preliminary Design With CPGA

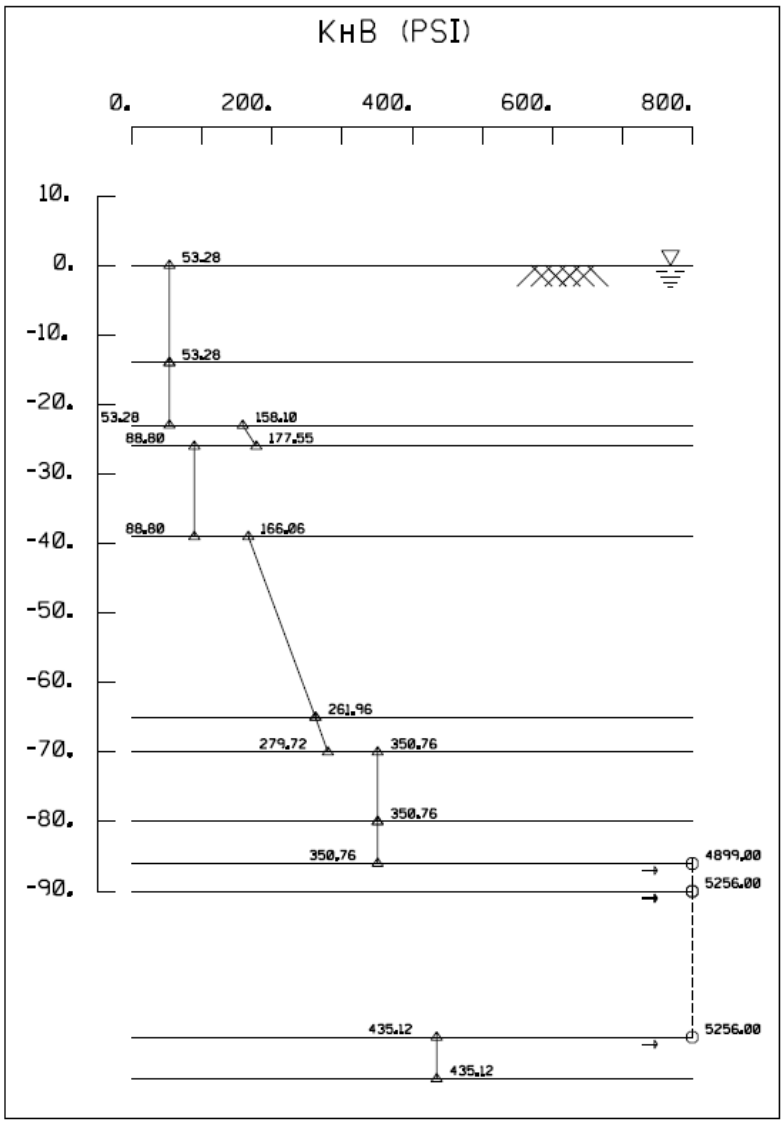

Figure 12. Soil Stiffness with Depth

4.2 This unbalanced force, $P_{cap,}$ is then analyzed with appropriate load cases in CPGA. Generally 8 to 20 load cases may be analyzed depending on expected load conditions. For this example, only the still water case is analyzed but both pervious and impervious foundation conditions are evaluated. See the spreadsheet calculations in Attachment 3 for the computation of the input for CPGA. The model is a 5 foot strip of the pile foundation.

For the CPGA analysis, the soil modulus, Es is adjusted based on the global stability factor of safety. For this example case, the factor of safety is 1.02. Es for CPGA is compute from the ratio of the computed factor of safety to the target factor of safety. From Figure 12, Es at the bottom of the wall footing is about 53.3 psi.

CPGA Es. = (1.02-1.0) / (1.5 – 1.0) * 53.3 = 2.1 psi

4.3 This is already a low value, but group factors from EM 1110-2-2906 can also be added. From page 4-35 of the EM with a spacing to pile diameter ratio of 5 ft / (14/12) = 4B, the reduction is 2.6. Es is therefore 2.1/2.6 = 0.8 psi

The CPGA output is shown in Attachment 4. A summary of results for the two load conditions analyzed are shown below:

LOAD CASE - 1 Pervious Condition

PILE	F1 K	F2 K	F3 K	M1 IN-K	M2 IN-K	M3 IN-K	ALF	CBF	
1	.2	.0	1.5	.0	-31.9	.0	.02	.03	
2	.2	.0	104.6	.0	-29.4	.0	1.41	.35	*
3	-.2	.0	-50.5	.0	30.7	.0	1.03	.18	*

LOAD CASE - 2 Impervious Condition

PILE	F1 K	F2 K	F3 K	M1 IN-K	M2 IN-K	M3 IN-K	ALF	CBF	
1	.2	.0	8.9	.0	-29.6	.0	.12	.05	
2	.1	.0	101.9	.0	-27.3	.0	1.38	.34	*
3	-.2	.0	-46.1	.0	28.7	.0	.94	.16	

Where:
F1 = Shear in pile at pile cap perpendicular to wall
F2 = Shear in Pile at Pile Cap parallel to wall
F3 = Axial Load in Pile
M1 = Maximum moment in pile perpendicular to wall
M2 = Maximum moment in pile parallel to wall
M3 = Torsion in pile
ALF= Axial load factor – computed axial load divided by allowable load
CBF= Combined Bending factor – combined computed axial and bending forces relative to allowable forces

Allowable axial pile capacities used for this analysis, 74 kips compressive and 49 kips tensile, were shown in step 3. The maximum pile forces computed in the middle piles exceed these values. This would require deeper piles or perhaps a revision of the pile layout. From Figure 4, and a factor of safety of 2 for an allowable pile capacity from pile load test data, to reach an allowable of 105 kips (ultimate of 210 kips or 105 tons), the piles only need to be increase to about 99 feet in length. This is not much difference, and the next steps will continue with the layout as shown. The tension piles have slightly exceeded the allowable capacity and could be made a few feet deeper to achieve required loads as well.

Computed deflections from the CPGA analysis are shown below:

PILE CAP DISPLACEMENTS

LOAD CASE	DX IN	DZ IN	R RAD
1	-.7241E+00	-.2963E+00	-.3212E-02
2	-.6757E+00	-.2609E+00	-.2899E-02

These deflections are less than the allowable vertical deflection (DZ) of 0.5 inches and allowable horizontal deflection (DX) of 0.75 inches from the Hurricane and Storm Damage Reduction Design Guidelines.

4.4 Sheet pile design. Seepage design of the sheet pile is not performed for this example.

4.5 Check for resistance against flow through. Since the pile spacing is uniform, we will analyze one row of piles parallel with the loading rather than the entire monolith.

a. Compute the resistance of the flood side row of piles.

$$\sum P_{all} = \frac{n \sum P_{ult}}{1.5}$$

Where:

n = number of piles in the row within a monolith. Or, for monoliths with uniformly spaced pile rows, n = 1. Use 1 for this example

$P_{ult} = \beta(9 S_u b)$

S_u = soil shear strength

b = pile width = 14”

β = group reduction factor pile spacing parallel to the load - since the piles batter opposite to each other, there group affects are not computed.

For the soils under the slab, S_u = 120 psf

Therefore: P_{ult} = 9(120 psf)(14 in/12 in/ft) = 1,260 lb/ft

ΣP_{ult} = summation of P_{ult} over the height L_p, as defined in paragraph 4.1

For single layer soil is P_{ult} multiplied by L_p (18 ft) - That is the condition here since the shear strength is constant from the base to the critical failure surface.

ΣP_{ult} = 1,260 lb/ft (18 ft) = 22,680 lb

ΣP_{all} = 1(22,680 lb)/1.5 = 15,120 lb

b. Compute the load acting on the piles below the pile cap.

$$F_{up} = w f_{ub} L_p$$

Where:

w = Monolith width. Since we are looking at one row of piles in this example, w = the pile spacing perpendicular to the unbalanced force (s_t) = 5 ft.

$$f_{ub} = \frac{F_{ub}}{L_u}$$

F_{ub} = Total unbalanced force per foot from Step 2 = 4,575 lb/ft
L_u = 22.5 ft
L_p = 18 ft

f_{ub} = 4,575 lb/ft / 22.5 ft = 203 lb/ft/ft

F_p = 5 ft(203lb/ft/ft)(18ft) = 18,270 lb

c. Check the capacity of the piles 50% of F_p = 18,270 lb(0.50) = 9,135 lb

The capacity ΣP_{all} = 15,120 lb > 9,135 lb so OK for flow-through with this check.

4.6 Second flow through check. Compute the ability of the soil to resist shear failure between the pile rows from the unbalanced force below the base of the T-wall, $f_{ub}L_p$, using the following equation:

$$f_{ub}L_p \le \frac{A_p S_u}{FS}\left[\frac{2}{(s_t - b)}\right]$$

Where:

A_pS_u = The area bounded by the bottom of the T-wall base, the critical failure surface, the upstream pile row and the downstream pile row multiplied by the shear strength of the soil within that area. – See Figure 13. S_u =120 psf

A_pS_u = (18(10+22)/2)(120 psf) = 34,560 lb

FS = Target factor of safety used in Steps 1 and 2. – 1.5

s_t= the spacing of the piles transverse (perpendicular) to the unbalanced force 5 ft

b = pile width – 14 inches

$f_{pb}L_p$ = (203 lb/ft)(18 ft) = 3,654 lb

$$\frac{A_p S_u}{FS}\left[\frac{2}{(s_t - b)}\right] = \frac{34{,}560}{1.5}\left[\frac{2}{5 - \left(\frac{14}{12}\right)}\right] = 12{,}021 \text{ lb}$$

Therefore, capacity against flow through is OK

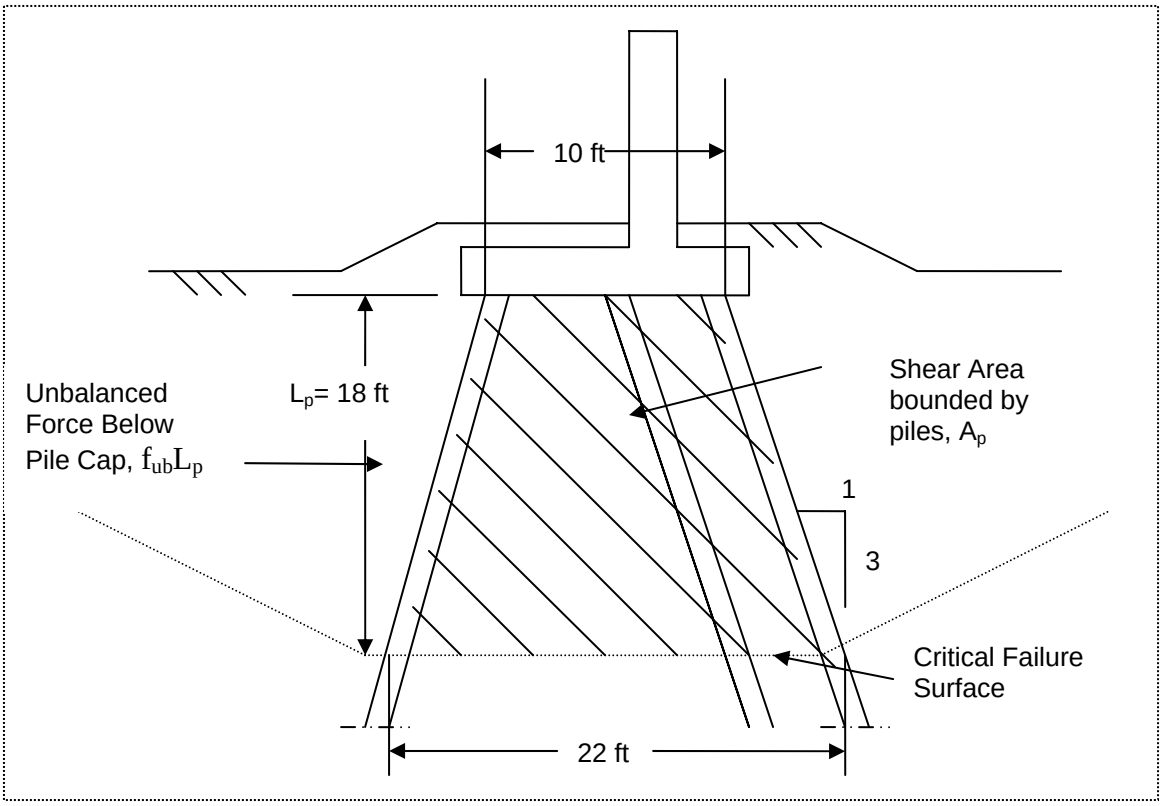

Figure 13. Shear Area for Flow Through Check

Step 5 Pile Group Analysis

5.1 A Group 7 analysis is performed using all loads applied to the T-wall structure. Critical load cases from step 4 would be used. In this example, only one load case with two foundation conditions is shown.

5.2 The loads applied in the Group 7 model include the distributed loads representing the unbalanced force that acts directly on the piles and also the water loads and self-weight of the wall that acts directly on the structure. In Group 7 these loads are resultant horizontal and vertical forces and the moments per width of spacing that act on the T-wall base (pile cap). They also include the unbalance force from the base of the cap to the top of soil, converted to a force and moment at the base of the structure. These forces are calculated using a worksheet or Excel spreadsheet and are shown at then end of the spreadsheets shown in Attachment 3. For this analysis the resultant forces per 5-ft of pile spacing were:

Impervious Foundation Condition

Vertical force	=	61,325 lb
Horizontal force	=	37,231 lb
Moment	=	1,540,666 in-lbs

Pervious Foundation Condition

Vertical force	=	52,731 lb
Horizontal force	=	37,231 lb
Moment	=	1,031,916 in-lbs

5.3 The unbalanced load below the bottom of the footing is applied directly as distributed loads on the pile. Check if ($n\Sigma P_{ult}$) of the flood side pile row is greater than 50% F_p, (from 4.5)

.

($n\Sigma P_{ult}$) = 1 (22,680) = 22,680 lb

50% F_p = 9,135 lb

Therefore distribute 50% of F_p onto the flood side (left) row of piles.

$0.5 f_{ub} s_t$ = 0.5 (203 lb/ft/ft)(5 ft) = 507.5 lb/ft = 42 lb/in

The remainder is divided among the remaining piles.

Middle pile = 21 lb/in
Right pile = 21 lb/in

5.4 The group 7 model is illustrated in Figure 14.

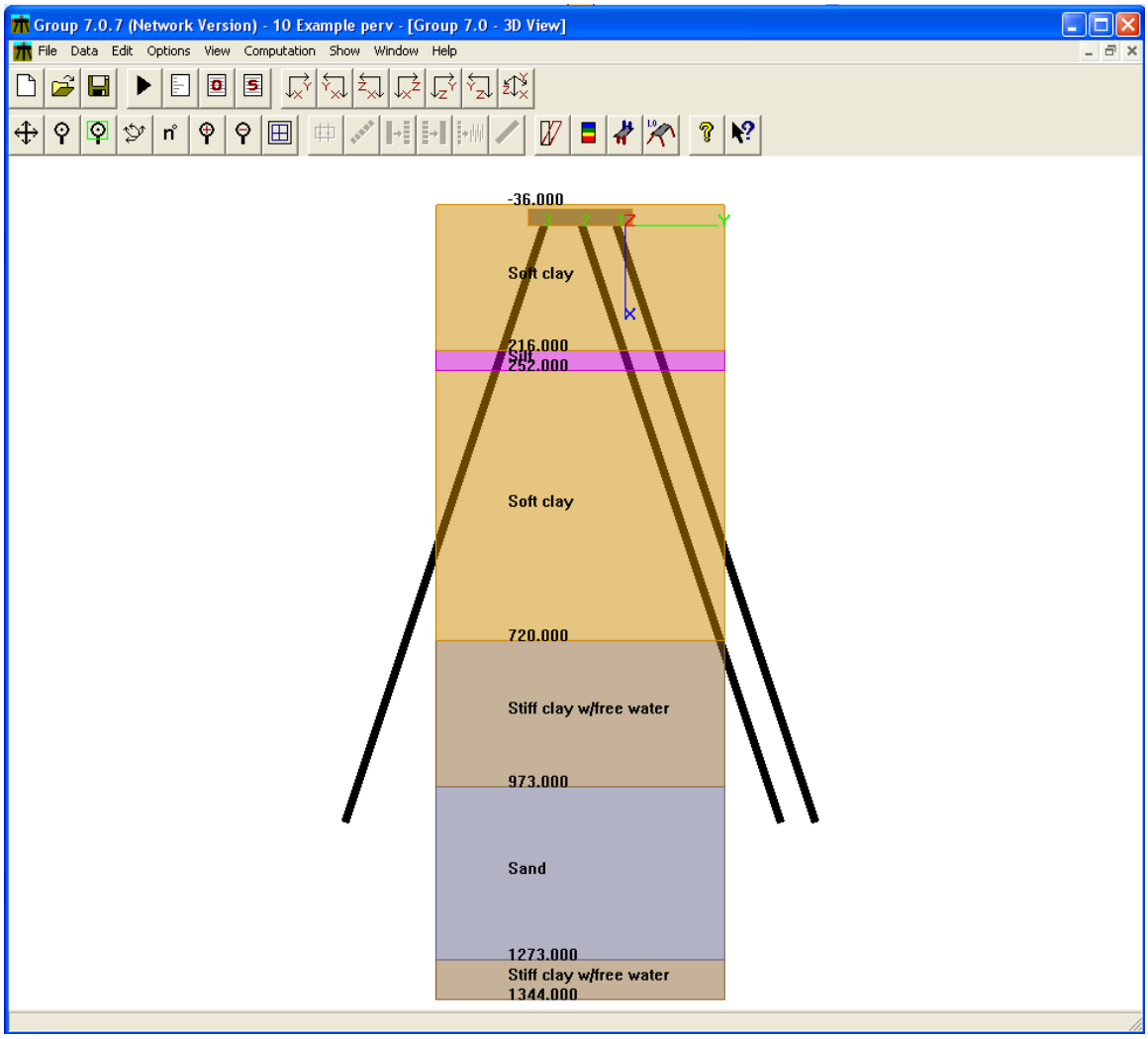

Figure 14. Group 7 Model with Soil Stratigraphy.

5.5 Additionally, in this analysis partial p-y springs can be used be cause the unreinforced factor of safety of 1.020 is between 1.0 and 1.5. The percentage of the full springs is determined as follows:

Partial spring percentage = (1.020 – 1.000)/ (1.5- 1.0) x 100% = 4%

Thus the strengths of in the top two layers, extending to Elevation -23 ft, were reduced to 4% of the undrained shear strength of 120 psf or 4.8 psf (0.0333 psi). The reduced undrained shear strength was used to scale the p-y curves above elevation -23 ft only. The results of the Group 7 analysis are listed in Table 1 where the pile responses for the full loading conditions on T-wall systems are listed. An example of the Group 7 output for the pervious condition are shown in Attachment 5

Table 2. Axial and shear Pile loads per 5-ft of width computed by Group 7 for full loading conditions that include distributed load in 50-25-25 split applied directly to piles and resultant horizontal, vertical and moments due to water loads and self weight applied directly to the structure			
Impervious Case	Left Pile	Center Pile	Right Pile
Axial Force (kips)	-35.3 (T)	88.5 (C)	11.6 (C)
Shear Force (kips)	4.49	2.4	2.7
Max. Moment (k-in)	-227	-199	-225
Pervious Case	Left Pile	Center Pile	Right Pile
Axial Force (kips)	-41.3 (T)	93.3 (C)	4.0 (C)
Shear Force (kips)	4.58	2. 5	2.7
Max. Moment (k-in)	-243	-219	-249

Figure 15 shows moment in the piles vs. depth and Figure 16 shows shear vs depth. There is no lateral soil stiffness from 0 to 216 inches.

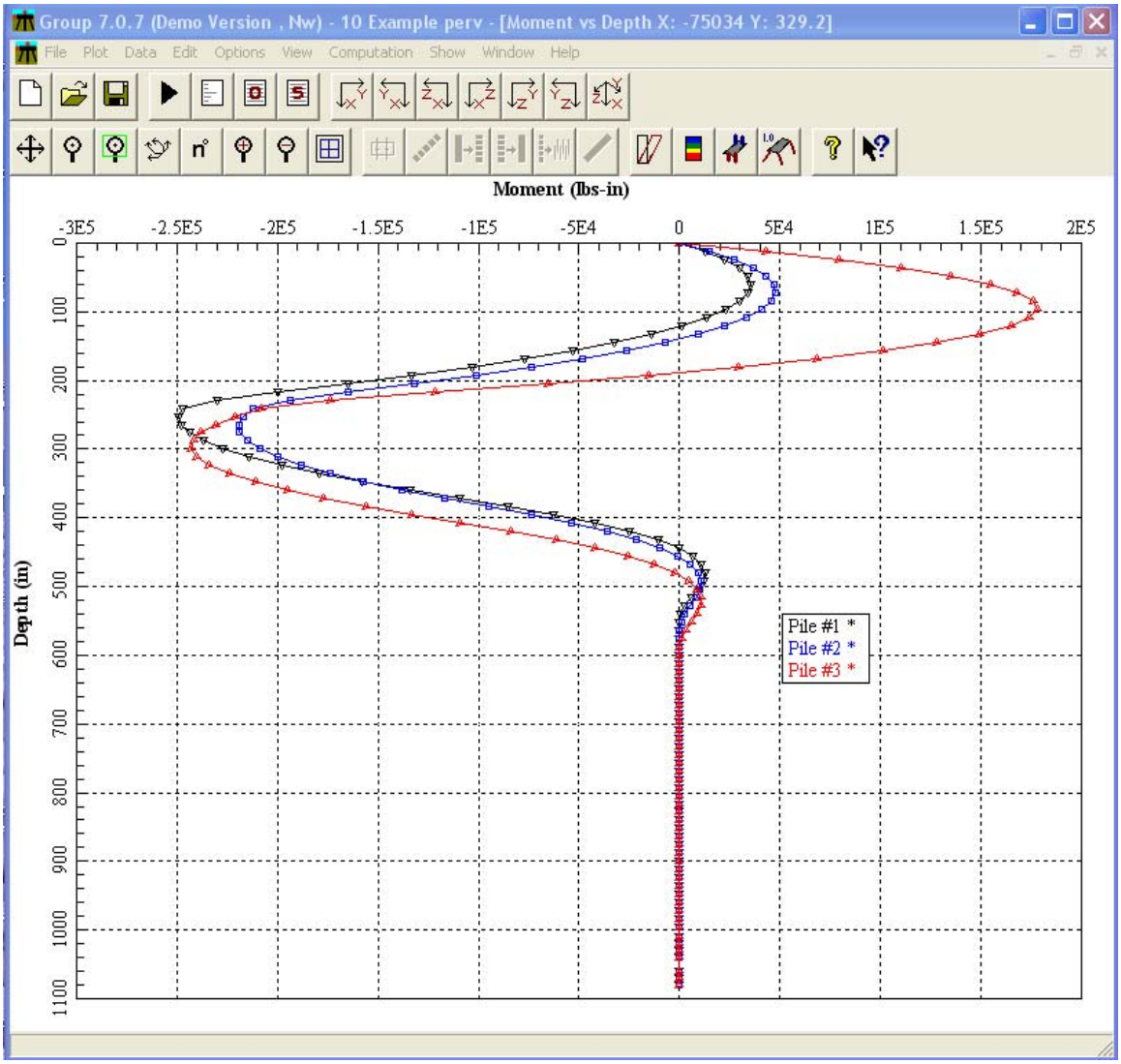

Figure 15. Moment vs depth.

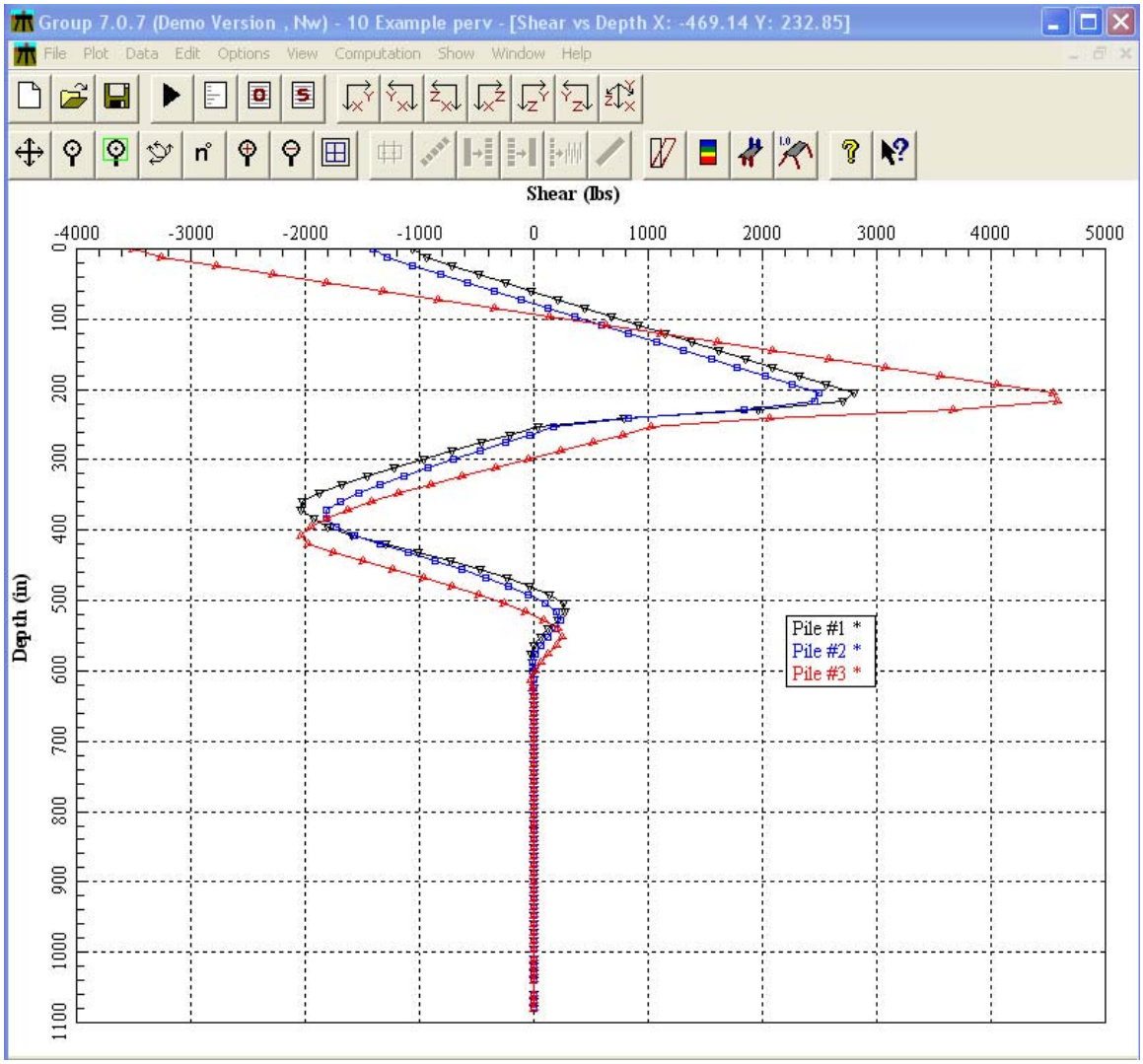

Figure 16. Shear vs depth

5.7 The axial forces and shear in Table 2 are then compared with allowable loads listed in Table 1. The results of the comparison show that:

a. the axial compressive forces in the center pile, 92.5 kips, exceeds the allowable compressive load of 74 kips.
b. the axial tensile force from the left (flood side) pile of -41.0 kips is less than the allowable tensile load of 54 kips.
c. The shear forces in each of the three piles are lower than the allowable shear of 8.2 kips.

Because the axial capacities of the center pile is exceeded, the pile layout must be repeated using a different pile layout. Axial forces and moment in the pile would be compared to allowable values computed according to EM 1110-2-2906. Moment and axial forces in the piles would also be checked for structural strength according to criteria

in the Hurricane and Storm Damage Reduction System Design Guidelines and EM1110-2-2906.

Displacements from the Group 7 analysis are as follows:
Deflections

LOAD CASE	DX IN	DZ IN
Pervious	0.520	-0.20
Impervious	0.485	-0.18

These deflections are less than the allowable vertical deflection (DZ) of 0.5 inches and allowable horizontal deflection (DX) of 0.75 inches from the Hurricane and Storm Damage Reduction Design Guidelines.

Deflection of the piles vs. depth is shown in Figure 17.

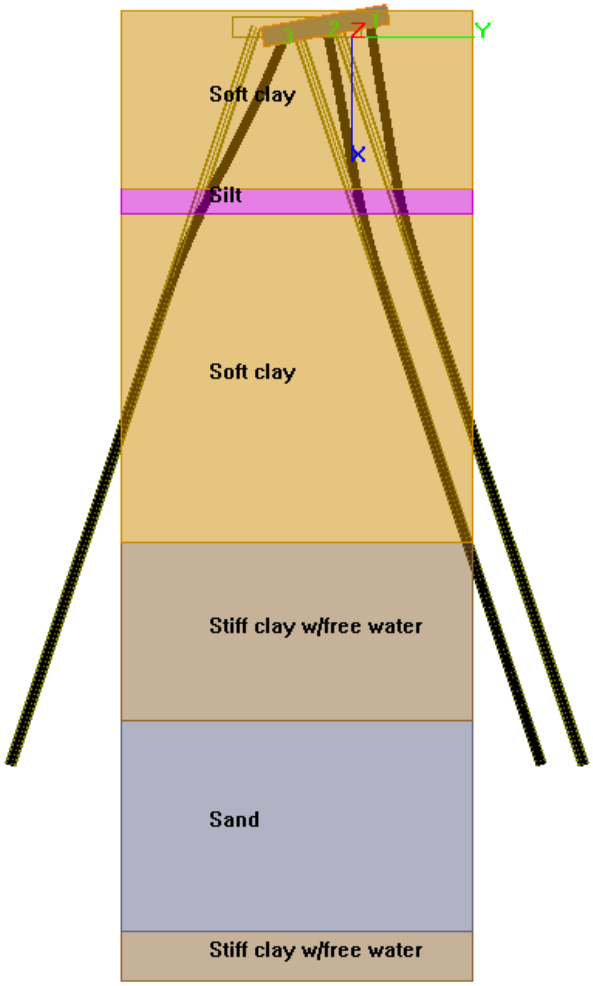

Figure 17 Deformed shape of pile cap

Deflection of the piles vs. depth is shown in Figure 18.

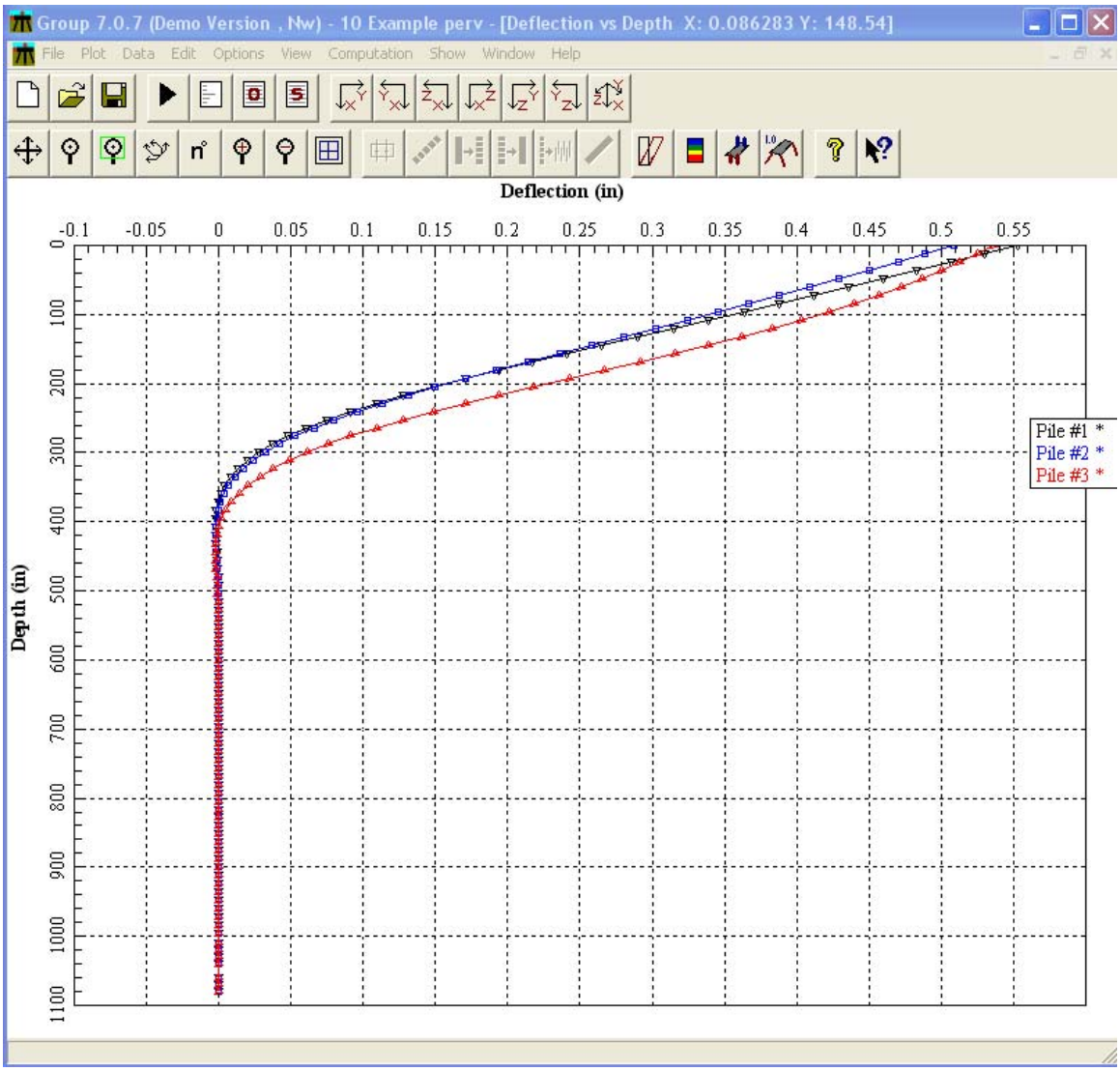

Figure 18 Deflection vs Depth

Step 6 Pile Group Analysis (unbalanced force)

6.1 Perform a Group 7 analysis with the distributed loads applied directly to the piles. The distributed loads are statically equivalent to the unbalanced force of 4,575 lb/ft. No loads are applied to the cap except unbalance forces. The p-y springs are set to 0 to the lowest critical failure surface elevation by setting the ultimate shear stress of these soils at a very low value. The distributed loads were computed in the previous step and are shown in the Excel spreadsheet computations shown in Attachment 3. Results of the Group analysis are shown below:

Table 3. Axial and shear Pile loads per 5-ft of width computed by Group 7

	Left Pile	Center Pile	Right Pile
Axial Force (kips)	-21.9 (T)	46.5 (C)	-24.5 (T)
Shear Force (kips)	4.24	2.32	2.48

Step 7 Pile Reinforced Slope Stability Analysis

7.1 The UT4 pile reinforcement analysis using the circle from Step 2 is performed to determine if the target Factor of Safety of 1.5 is achieved. The piles are treated as reinforcements in the UT4 and the shear and axial forces from Step 6 are used to determine these forces. The forces in Table 3 must be converted to unit width conditions by dividing by the 5-ft pile spacing to be used as the axial and shear forces in the pile reinforcements in UT4. The results of the analysis are shown in Figure 18. The factor of safety is 1.521 which exceeds that target factor of safety of 1.5. Therefore, the global stability of the foundation is verified in this Step. The input file is listed in Attachment 6.

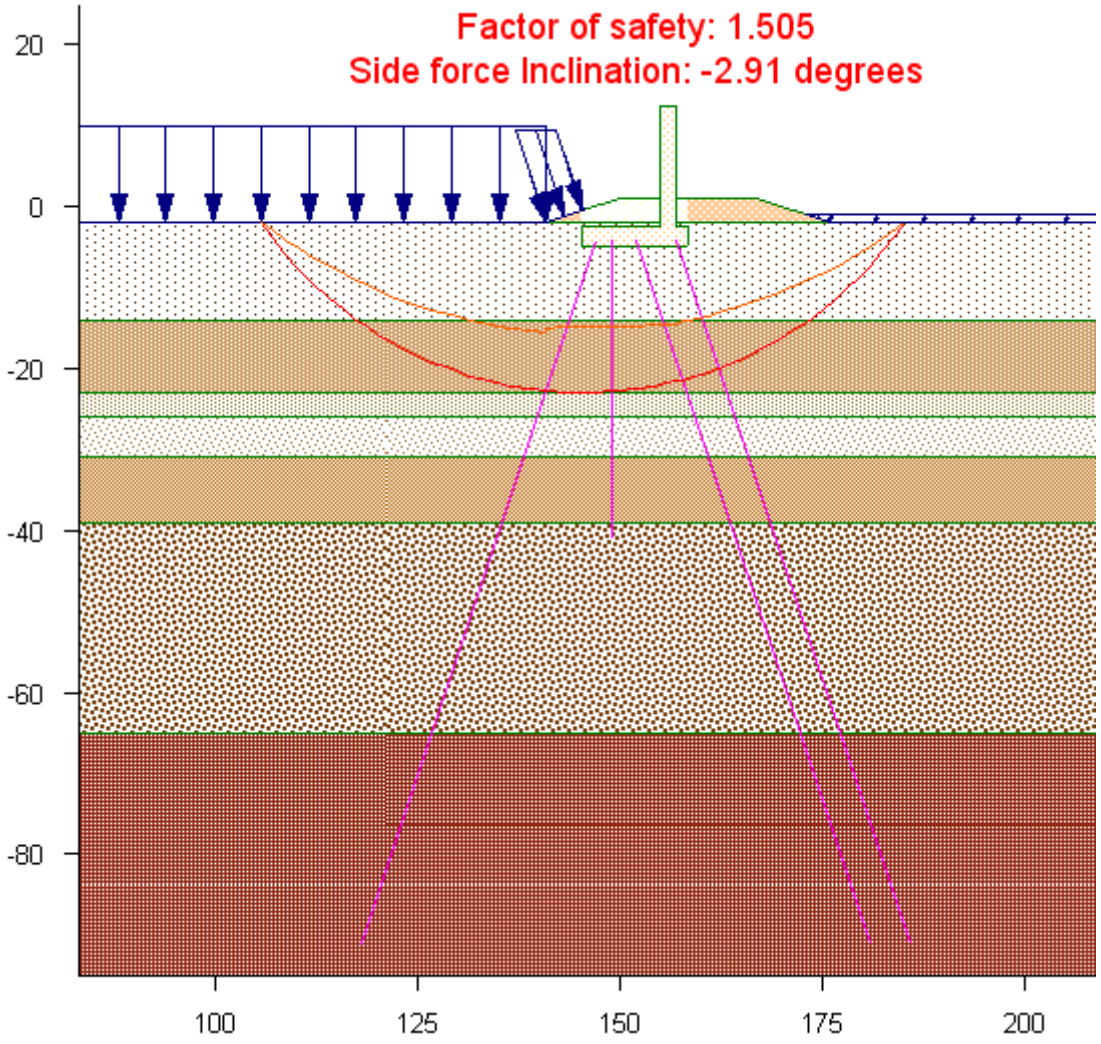

Figure 19. Factor of safety computed using pile forces from Group 7 analysis And critical circle from fixed grid analysis

7.2 Pile axial and shear forces determined in the pile group analysis are input in the slope stability analysis as longitudinal and transverse reinforcement forces. Sign convention for longitudinal forces in UTexas4 is that tensile forces are positive and compressive forces are negative. Sign convention for pile founded T-Walls with piles that extend below the critical failure surface and resist sliding of the soil mass is that transverse forces in UTexas4 are positive in the clockwise direction and negative in the counter-clockwise direction. This results in positive transverse forces in cases where the left side of the T-Wall is the flood side and negative transverse forces in cases where the right side of the T-Wall is the flood side. Positive longitudinal and transverse reinforcement forces for pile founded T-Walls are shown in Figure 20.

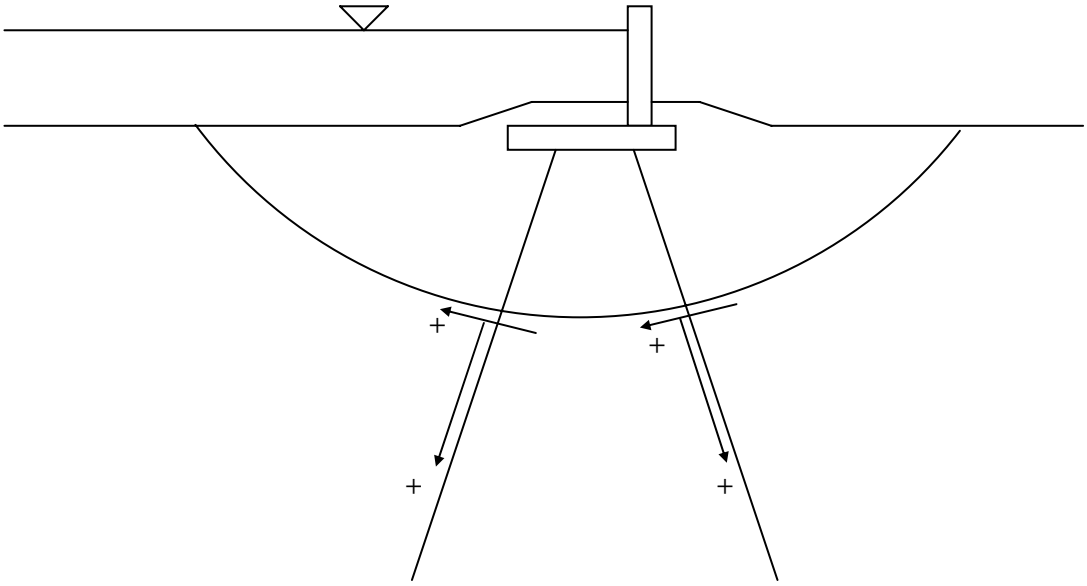

Figure 20. Positive directions for longitudinal and transverse reinforcement loads in pile.

Attachment 1 – Spencer's method analysis without piles that results in Figure 3.

```
HEADING
    T-Wall Deep Seated Analysis
    Analysis without piles

PROFILE LINES
         1    1 Layer 3 (CH) - Floodside
                 .00     -2.00
              141.00     -2.00
              155.00     -2.00

         2    1 Layer 3 (CH) - Landside
              157.00     -2.00
              375.00     -2.00

         3    2 Compacted Fill - FS
              141.00     -2.00
              145.50      -.50

         4    2 Compacted Fill - LS
              158.50      1.00
              167.00      1.00
              176.00     -2.00

         5    3 T-Wall
              145.50     -5.00
              145.50     -2.50
              155.00     -2.50
              155.00     -2.00
              155.00     12.30
              157.00     12.30
              157.00      1.00
              157.00     -2.00
              157.00     -2.50
              158.50     -2.50
              158.50     -5.00

         6    1 Layer 3 (CH) - Under Wall
              145.50     -5.00
              158.50     -5.00

         7    4 Layer 4 (CH)
                 .00    -14.00
              375.00    -14.00

         8    5 Layer 5 (ML)
                 .00    -23.00
              375.00    -23.00

         9    6 Layer 6 (CH)
                 .00    -26.00
              375.00    -26.00

        10    7 Layer 7 (CH)
```

```
               .00    -31.00
            375.00    -31.00

      11    8 Layer 8 (CH)
               .00    -39.00
            375.00    -39.00

      12    9 Layer 9 (CH)
               .00    -65.00
            375.00    -65.00

      13   10 Compacted Fill - Above T Wall Base  FS
            145.50      -.50
            150.00      1.00
            155.00      1.00

      14   10 Compacted Fill - Above T Wall Base  LS
            157.00      1.00
            158.50      1.00


MATERIAL PROPERTIES
     1 Layer 3 (CH)
          80.00 Unit Weight
          Conventional Shear
              120.00       .00
          No Pore Pressure
     2 Compacted Fill
          110.00 Unit Weight
          Conventional Shear
              500.00       .00
          No Pore Pressure
     3 T Wall
          .00 Unit Weight
          Very Strong
     4 Layer 4 (CH)
          100.00 Unit Weight
          Conventional Shear
              120.00       .00
          No Pore Pressure
     5 Layer 5 (ML)
          117.00 Unit Weight
          Conventional Shear
              200.00     15.00
          Piezometric Line
          1
     6 Layer 6 (CH)
          100.00 Unit Weight
          Conventional Shear
              200.00       .00
          No Pore Pressure
     7 Layer 7 (CH)
          100.00 Unit Weight
          Linear Increase
              217.00      8.10
          No Pore Pressure
     8 Layer 8 (CH)
```

```
          100.00 Unit Weight
          Linear Increase
              374.00      8.30
          No Pore Pressure
     9 Layer 9 (CH)
          100.00 Unit Weight
          Linear Increase
              590.00      8.00
          No Pore Pressure
     10 Compacted Fill - Above T-Wall Base
          .00 Unit Weight
          Conventional Shear
                 .00       .00
          No Pore Pressure

PIEZOMETRIC LINES
         1     62.40 Water Level
                 .00     10.00
               145.50     10.00
               145.51     -1.00
               157.00     -1.00
               375.00     -1.00

         2     62.40 Piezometeric levels in ML
                 .00     10.00
               149.50     10.00
               156.00     10.00
               158.50      1.00
               167.00      1.00
               173.00     -1.00
               375.00     -1.00


DISTRIBUTED LOADS
      1
ANALYSIS/COMPUTATION
     Circular Search 1
         146     22      1.00   -100.00       .00
     Tangent
          -23
SINgle-stage Computations
RIGht Face of Slope
LONg-form output
SORt radii
CRItical
PROcedure for computation of Factor of Safety
SPENCER

GRAPH
COMPUTE
```

Attachment 2 – Spencer's method analysis with unbalanced load that results in Figure 4.

```
HEADING
    T-Wall Deep Seated Analysis
    Analysis without piles

PROFILE LINES
         1    1 Layer 3 (CH) - Floodside
                 .00     -2.00
              141.00     -2.00
              155.00     -2.00

         2    1 Layer 3 (CH) - Landside
              157.00     -2.00
              375.00     -2.00

         3    2 Compacted Fill - FS
              141.00     -2.00
              145.50      -.50

         4    2 Compacted Fill - LS
              158.50      1.00
              167.00      1.00
              176.00     -2.00

         5    3 T-Wall
              145.50     -5.00
              145.50     -2.50
              155.00     -2.50
              155.00     -2.00
              155.00     12.30
              157.00     12.30
              157.00      1.00
              157.00     -2.00
              157.00     -2.50
              158.50     -2.50
              158.50     -5.00

         6    1 Layer 3 (CH) - Under Wall
              145.50     -5.00
              158.50     -5.00

         7    4 Layer 4 (CH)
                 .00    -14.00
              375.00    -14.00

         8    5 Layer 5 (ML)
                 .00    -23.00
              375.00    -23.00

         9    6 Layer 6 (CH)
                 .00    -26.00
              375.00    -26.00

        10    7 Layer 7 (CH)
```

```
               .00    -31.00
            375.00    -31.00

      11    8 Layer 8 (CH)
               .00    -39.00
            375.00    -39.00

      12    9 Layer 9 (CH)
               .00    -65.00
            375.00    -65.00

      13   10 Compacted Fill - Above T Wall Base  FS
            145.50      -.50
            150.00      1.00
            155.00      1.00

      14   10 Compacted Fill - Above T Wall Base  LS
            157.00      1.00
            158.50      1.00


MATERIAL PROPERTIES
     1 Layer 3 (CH)
          80.00 Unit Weight
          Conventional Shear
              120.00       .00
          No Pore Pressure
     2 Compacted Fill
          110.00 Unit Weight
          Conventional Shear
              500.00       .00
          No Pore Pressure
     3 T Wall
          .00 Unit Weight
          Very Strong
     4 Layer 4 (CH)
          100.00 Unit Weight
          Conventional Shear
              120.00       .00
          No Pore Pressure
     5 Layer 5 (ML)
          117.00 Unit Weight
          Conventional Shear
              200.00     15.00
          Piezometric Line
          1
     6 Layer 6 (CH)
          100.00 Unit Weight
          Conventional Shear
              200.00       .00
          No Pore Pressure
     7 Layer 7 (CH)
          100.00 Unit Weight
          Linear Increase
              217.00      8.10
          No Pore Pressure
     8 Layer 8 (CH)
```

```
          100.00 Unit Weight
          Linear Increase
              374.00      8.30
          No Pore Pressure
     9 Layer 9 (CH)
          100.00 Unit Weight
          Linear Increase
              590.00      8.00
          No Pore Pressure
     10 Compacted Fill - Above T-Wall Base
          .00 Unit Weight
          Conventional Shear
                 .00       .00
          No Pore Pressure

PIEZOMETRIC LINES
         1     62.40 Water Level
                 .00     10.00
               145.50     10.00
               145.51     -1.00
               157.00     -1.00
               375.00     -1.00

         2     62.40 Piezometeric levels in ML
                 .00     10.00
               149.50     10.00
               156.00     10.00
               158.50      1.00
               167.00      1.00
               173.00     -1.00
               375.00     -1.00


DISTRIBUTED LOADS
       1
LINE LOADS
              1    145     -11.75 -4575.00       .00 1

ANALYSIS/COMPUTATION
     Circular Search 1
         145     22      0.50   -100.00       .00
     Tangent
          -23
SINgle-stage Computations
RIGht Face of Slope
LONg-form output
SORt radii
CRItical
PROcedure for computation of Factor of Safety
SPENCER

GRAPH
COMPUTE
```

Attachment 3 Structural Loads for CPGA and Group Analyses

US Army Corps of Engineers	PROJECT TITLE:	COMPUTED BY:	DATE:	SHEET:	
Saint Paul Distict	T-Wall Design Example	KDH	07/27/07		
	SUBJECT TITLE:	CHECKED BY:	DATE:		
	Water at El. 10', Pervious				

Input for CPGA pile analysis **Pervious Foundation Assumption**

Upstream Water Elevation	*10*	ft	Back Fill Soil Elevation	*1*	ft
Downstream Water Elevation	*-1*	ft	Front Fill Soil Elevation	*1*	ft
Wall Top Elevation	*12.5*	ft	Gamma Water	*0.0625*	kcf
Structure Bottom Elevation	*-5*	ft	Gamma Concrete	*0.15*	kcf
Base Width	*13*	ft	Gamma Sat. Backfill	*0.110*	kcf
Toe Width	*1.5*	ft	Distance to Backfill Break	*5.0*	ft
Wall Thickness	*1.5*	ft	Slope of Back Fill	*0.30*	
Base Thickness	*2.5*	ft	Soil Elevation at Heel	-0.50	ft

Vertical Forces

Component	Height	x1	x2	Gamma	Force	Arm	Moment	
Stem Concrete	15	10	11.5	0.15	3.38	10.75	36.3	
Heel Concrete	2.5	0	11.5	0.15	4.31	5.75	24.8	
Toe Concrete	2.5	11.5	13	0.15	0.56	12.25	6.9	
Heel Water	9	0	10	0.0625	5.63	5	28.1	
Toe Water	1.5	11.5	13	0.0625	0.14	12.25	1.7	
Heel Soil	3.5	0	10	0.110	3.85	5	19.3	
-Triangle	1.50	0	5.0	-0.048	-0.18	1.67	-0.3	
Toe Soil	3.5	11.5	13	0.110	0.58	12.25	7.1	
Rect Uplift	-4	0	13	0.0625	-3.25	6.5	-21.1	
Tri Uplift	-11	0	13	0.0625	-4.47	4.3	-19.4	
Sum Vertical Forces					10.5		83.4	ft-k

Horizontal Forces

Component	H1	H2	Gamma	Lat. Coeff.	Force	Arm	Moment	
Driving Water	10	-5	0.0625	1	7.03	5.00	35.16	
Resisting Water	-1	-5	0.0625	1	-0.50	1.33	-0.67	
Lateraral soil forces assumed equal and negligible								
Sum Horizontal Forces					6.53	5.28	34.49	ft-k

Total Structural Forces	Net Vert. Force	Arm	Moment	
About Heel	10.55	11.17	117.84	ft-k

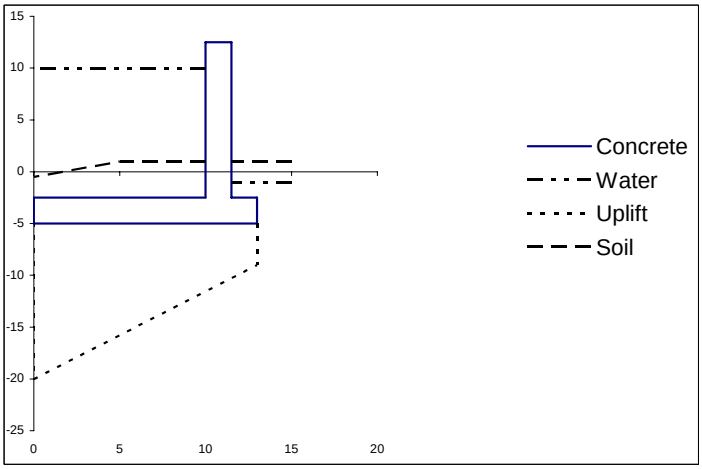

Net Vertical Arm		
From Toe	1.83	ft

Moment About Toe
-19.3 ft-k

Model Width
5 ft

US Army Corps of Engineers	PROJECT TITLE:	COMPUTED BY:	DATE:	SHEET:	
Saint Paul Distict	T-Wall Design Example	KDH	07/27/07		
	SUBJECT TITLE: Water at El. 10', Pervious	CHECKED BY:	DATE:		

Calculation of Unbalanced Force

Unbalanced Force. F_{ub}	*4,575*	lb/ft	From UTexas Analysis
Elevation of Critical Surface	*-23*	ft	From UTexas Analysis
Length - Ground to Crit. Surface, Lu	22.5	ft	(assume failure surface is normal to pile)
Length - Base to Crit. Surface, Lp	18	ft	
Pile Moment of Inertia. I	*729*	in^4	HP14x73
Pile Modulus of Elasticity E	*29,000,000*	lb/in^2	
Soil Modulus of Subgrade Reaction, k	*100*	lb/in^2	
Soil Stiffness Parameter, R	121	in	$(EI / k)^{1/4}$
Equivalent Unbalanced Force, Pcap	3,474	lb/ft	$F_{ub} * (L_u/2 +R) / (L_p +R)$

CPGA Input

PX	-50.03	kips
PY		
PZ	52.73	kips
MX	0	
MY	-96.29	kip-ft
MZ	0	

Group Input

3 Pile Rows Parallel to Wall Face

Unbalanced Loading on Piles for Group Analysis

Total	85	lb/in	F_{ub} * Model Width /L_u
50%	42	lb/in	For Pile on Protected Sied
25%	21	lb/in	

Note: Applied to length of pile from bottom of cap to top of critical surface. 18

Unbalanced Loads on Wall for Group Analysis of Just Unbalanced Forces

Distance From Base to Ground Surface, Ds 4.50 ft

PX	0	lb	
PY	4,575	lb	F_{ub} * Model Width / L_u * Ds
PZ	0	lb	
MX	0		
MY	0		
MZ	-123,525	lb-in	-PZ * Ds/2

Total Loads for Group Analysis

PX	52,731	lb	
PY	37,231	lb	PYub + Sum Horizontal * Model Width
PZ	0	lb	
MX	0		
MY	0		
MZ	1,031,916	lb-in	

US Army Corps of Engineers	PROJECT TITLE:	COMPUTED BY:	DATE:	SHEET:	
Saint Paul Distict	T-Wall Design Example	KDH	07/27/07		
	SUBJECT TITLE:	CHECKED BY:	DATE:		
	Water at El. 10', Impervious				

Input for CPGA pile analysis

Upstream Water Elevation	*10*	ft
Downstream Water Elevation	*-1*	ft
Wall Top Elevation	*12.5*	ft
Structure Bottom Elevation	*-5*	ft
Base Width	*13*	ft
Toe Width	*1.5*	ft
Wall Thickness	*1.5*	ft
Base Thickness	*2.5*	ft

Impervious Foundation Assumption

Back Fill Soil Elevation	*1*	ft
Front Fill Soil Elevation	*1*	ft
Gamma Water	*0.0625*	kcf
Gamma Concrete	*0.15*	kcf
Gamma Soil	*0.110*	kcf
Distance to Backfill Break	*5.0*	ft
Slope of Back Fill	*0.30*	
Soil Elevation at Heel	-0.50	ft

Vertical Forces

Component	Height	x1	x2	Gamma	Force	Arm	Moment	
Stem Concrete	15	10	11.5	0.15	3.38	10.75	36.3	
Heel Concrete	2.5	0	11.5	0.15	4.31	5.75	24.8	
Toe Concrete	2.5	11.5	13	0.15	0.56	12.25	6.9	
Heel Water	9	0	10	0.0625	5.63	5	28.1	
Toe Water	1.5	11.5	13	0.0625	0.14	12.25	1.7	
Heel Soil	3.5	0	10	0.110	3.85	5	19.3	
-Triangle	1.50	0	5.0	-0.048	-0.18	1.67	-0.3	
Toe Soil	3.5	11.5	13	0.110	0.58	12.25	7.1	
Prot. Side Uplift	-4	*4*	13	0.0625	-2.25	8.5	-19.1	
Flood Side Uplift	-15	0	4	0.0625	-3.75	2	-7.5	
Sum Vertical Forces					12.3	kip	97.2	ft-k

Horizontal Forces

Component	H1	H2	Gamma	Lat. Coeff.	Force	Arm	Moment	
Driving Water	10	-5	0.0625	1	7.03	5.00	35.16	
Resisting Water	-1	-5	0.0625	1	-0.50	1.33	-0.67	
Lateraral soil forces assumed equal and negligible								
Sum Horizontal Forces					6.53	kip	34.49	ft-k

Total Structural Forces	Net Vert. Force	Arm	Moment	
About Heel	12.27	10.74	131.71	ft-k

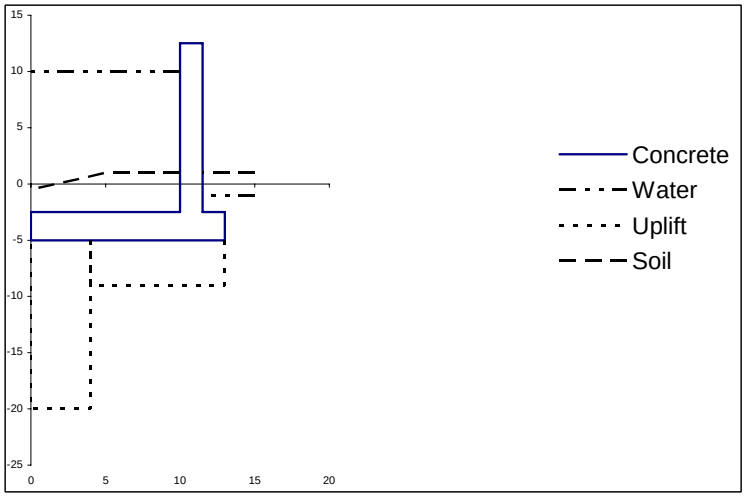

Net Vertical Arm		
From Toe	2.26	ft

Moment About Toe
-27.7 ft-k

Model Width
5 ft

US Army Corps of Engineers Saint Paul Distict	PROJECT TITLE: T-Wall Design Example	COMPUTED BY: KDH	DATE: 07/27/07	SHEET:	
	SUBJECT TITLE: Water at El. 10', Impervious	CHECKED BY:	DATE:		

Calculation of Unbalanced Force

Unbalanced Force. F_{ub}	*4,575*	lb/ft	From UTexas Analysis
Elevation of Critical Surface	*-23*	ft	From UTexas Analysis
Length - Ground to Crit. Surface, Lu	23	ft	(assume failure surface is normal to pile)
Length - Base to Crit. Surface, Lp	18	ft	
Pile Moment of Inertia. I	*729*	in^4	HP14x73
Pile Modulus of Elasticity E	*29,000,000*	lb/in^2	
Soil Modulus of Subgrade Reaction, k	*100*	lb/in^2	
Soil Stiffness Parameter, R	121	in	$(EI / k)^{1/4}$
Equivalent Unbalanced Force, Pcap	3,474	lb/ft	$F_{ub} * (L_u/2 +R) / (L_p +R)$

CPGA Input

PX	-50.03	kips
PY		
PZ	61.33	kips
MX	0	
MY	-138.68	kip-ft
MZ	0	

Group Input

3 Pile Rows Parallel to Wall Face

Unbalanced Loading on Piles for Group Analysis

Total	85	lb/in	$F_{ub} *$ Model Width $/L_u$
50%	42	lb/in	For Pile on Protected Sied
25%	21	lb/in	

Note: Applied to length of pile from bottom of cap to top of critical surface. 18 ft

Unbalanced Loads on Wall for Group Analysis of Just Unbalanced Forces

Distance From Base to Ground Surface, Ds 4.50 ft

PX	0	lb	
PY	4,575	lb	$F_{ub} *$ Model Width / $L_u *$ Ds
PZ	0	lb	
MX	0		
MY	0		
MZ	-123,525	lb-in	-PZ * Ds/2

Total Loads for Group Analysis

PX	61,325	lb	
PY	37,231	lb	PYub + Sum Horizontal * Model Width
PZ	0	lb	
MX	0		
MY	0		
MZ	1,540,666	lb-in	

Attachment 4 - Preliminary Analysis with CPGA

```
 10 Geomatrix T-wall, Example
 15 2.5 ft slab, hp 14 x 73 piles, pinned head, 3:1 batter
 20 PROP 29000 261 729 21.4 1.0 0 all
 30 SOIL ES 0.0008 "TIP" 87 0 all
 40 PIN all
 50 ALLOW H 74.0 49.0 315.8  315.8  520.6  1573.1 all
 70 BATTER 3.0 1 2 3
 80 ANGLE 180 1 2
 180 PILE 1  1.500 0.00 0.00
 201 PILE 2  6.500 0.00 0.00
 202 PILE 3  11.50 0.00 0.00
 230 LOAD 1 -50.03  0.0  52.73  0.00  -96.29
 240 LOAD 2 -50.03  0.0  61.33  0.00  -138.68
 334 FOUT 1 2 3 4 5 6 7 MVN10EXT.OUT
 335 PFO ALL


*********************************
 * CASE PROGRAM   #  X0080       *  CPGA - CASE PILE GROUP ANALYSIS PROGRAM
 * VERSION NUMBER # 1993/03/29   *  RUN DATE 27-JUL-2007   RUN TIME 16.23.07
 *********************************


 GEOMATRIX T-WALL, EXAMPLE


 THERE ARE    3 PILES AND
              2 LOAD CASES IN THIS RUN.

 ALL PILE COORDINATES ARE CONTAINED WITHIN A BOX
                                      X          Y          Z
                                    -----      -----      -----
 WITH DIAGONAL COORDINATES = (      1.50 ,      .00 ,      .00 )
                             (     11.50 ,      .00 ,      .00 )


 ********************************************************************************

          PILE PROPERTIES AS INPUT


       E           I1           I2            A           C33          B66
      KSI         IN**4        IN**4         IN**2
   .29000E+05   .26100E+03   .72900E+03   .21400E+02   .10000E+01   .00000E+00

 THESE PILE PROPERTIES APPLY TO THE FOLLOWING PILES -

     ALL


 ********************************************************************************

          SOIL DESCRIPTIONS AS INPUT
```

ES	ESOIL K/IN**2	LENGTH	L FT	LU FT
	.80000E-03	T	.87000E+02	.00000E+00

THIS SOIL DESCRIPTION APPLIES TO THE FOLLOWING PILES -

ALL

****

PILE GEOMETRY AS INPUT AND/OR GENERATED

NUM	X FT	Y FT	Z FT	BATTER	ANGLE	LENGTH FT	FIXITY
1	1.50	.00	.00	3.00	180.00	91.71	P
2	6.50	.00	.00	3.00	180.00	91.71	P
3	11.50	.00	.00	3.00	.00	91.71	P

						275.12	

****

APPLIED LOADS

LOAD CASE	PX K	PY K	PZ K	MX FT-K	MY FT-K	MZ FT-K
1	-50.0	.0	52.7	.0	-96.3	.0
2	-50.0	.0	61.3	.0	-138.7	.0

****

ORIGINAL PILE GROUP STIFFNESS MATRIX

.16980E+03	.98653E-05	-.16911E+03	.00000E+00	-.71028E+04	.47353E-03
.98653E-05	.52928E+00	-.29569E-04	.00000E+00	.14193E-02	.41284E+02
-.16911E+03	-.29569E-04	.15227E+04	.00000E+00	-.11877E+06	-.14193E-02
.00000E+00	.00000E+00	.00000E+00	.00000E+00	.00000E+00	.00000E+00
-.71028E+04	.14193E-02	-.11877E+06	.00000E+00	.12919E+08	.94738E-01
.47353E-03	.41284E+02	-.14193E-02	.00000E+00	.94738E-01	.44904E+04

S(4,4)=0. PROBLEM WILL BE TREATED AS TWO DIMENSIONAL IN THE X-Z PLANE.

LOAD CASE 1. NUMBER OF FAILURES = 2. NUMBER OF PILES IN TENSION = 1.

LOAD CASE 2. NUMBER OF FAILURES = 1. NUMBER OF PILES IN TENSION = 1.

****

PILE CAP DISPLACEMENTS

LOAD CASE	DX IN	DZ IN	R RAD
1	-.7241E+00	-.2963E+00	-.3212E-02
2	-.6757E+00	-.2609E+00	-.2899E-02

****

ELASTIC CENTER INFORMATION

ELASTIC CENTER IN PLANE X-Z	X FT	Z FT
	7.74	-11.20

LOAD CASE	MOMENT IN X-Z PLANE
1	.21918E+06
2	.44689E+06

****

PILE FORCES IN LOCAL GEOMETRY

M1 & M2 NOT AT PILE HEAD FOR PINNED PILES
* INDICATES PILE FAILURE
# INDICATES CBF BASED ON MOMENTS DUE TO (F3*EMIN) FOR CONCRETE PILES
B INDICATES BUCKLING CONTROLS

LOAD CASE - 1

PILE	F1 K	F2 K	F3 K	M1 IN-K	M2 IN-K	M3 IN-K	ALF	CBF	
1	.2	.0	1.5	.0	-31.9	.0	.02	.03	
2	.2	.0	104.6	.0	-29.4	.0	1.41	.35	*
3	-.2	.0	-50.5	.0	30.7	.0	1.03	.18	*

LOAD CASE - 2

PILE	F1 K	F2 K	F3 K	M1 IN-K	M2 IN-K	M3 IN-K	ALF	CBF	
1	.2	.0	8.9	.0	-29.6	.0	.12	.05	
2	.1	.0	101.9	.0	-27.3	.0	1.38	.34	*
3	-.2	.0	-46.1	.0	28.7	.0	.94	.16	

****

PILE FORCES IN GLOBAL GEOMETRY

LOAD CASE - 1

PILE	PX K	PY K	PZ K	MX IN-K	MY IN-K	MZ IN-K
1	-.7	.0	1.4	.0	.0	.0
2	-33.2	.0	99.2	.0	.0	.0
3	-16.1	.0	-47.9	.0	.0	.0

LOAD CASE - 2

PILE	PX K	PY K	PZ K	MX IN-K	MY IN-K	MZ IN-K
1	-3.0	.0	8.4	.0	.0	.0
2	-32.4	.0	96.6	.0	.0	.0
3	-14.7	.0	-43.6	.0	.0	.0

Attachment 5. Group 7 Output for the Pervious Condition.

```
================================================================================

                GROUP for Windows, Version 7.0.7

                  Analysis of A Group of Piles
               Subjected to Axial and Lateral Loading

                (c) Copyright ENSOFT, Inc., 1987-2006
                      All Rights Reserved

================================================================================


This program is licensed to:

k
c

Path to file locations:      C:\KDH\New Orleans\T-walls\Group\
Name of input data file:     10 Example perv.gpd
Name of output file:         10 Example perv.gpo
Name of plot output file:    10 Example perv.gpp
Name of runtime file:        10 Example perv.gpr
Name of output summary file: 10 Example perv.gpt


--------------------------------------------------------------------------------
-
                           Time and Date of Analysis
--------------------------------------------------------------------------------
-

               Date:  July 27, 2007     Time:  17:44: 4
 PILE GROUP ANALYSIS PROGRAM-GROUP
 PC VERSION 6.0 (C) COPYRIGHT ENSOFT,INC. 2000

 THE PROGRAM WAS COMPILED USING MICROSOFT FORTRAN
 POWERSTATION 4.0 (C) COPYRIGHT MICROSOFT CORPORATION, 1996.



      T-wall Example:  F.S. 10.0, P.S. -1.0, Pervious 50% Unbal. Force on
left pile


                *****     INPUT INFORMATION     *****



     * TABLE C *  LOAD AND CONTROL PARAMETERS


     UNITS--
```

```
   V LOAD,LBS     H LOAD,LBS    MOMENT,LBS-IN

   0.5273E+05     0.3723E+05     0.1032E+07

  GROUP NO. 1

              DISTRIBUTED LOAD CURVE           2 POINTS

                        X,IN      LOAD,LBS/IN
                        0.00        0.210E+02
                      216.00        0.210E+02

  GROUP NO. 2

              DISTRIBUTED LOAD CURVE           2 POINTS

                        X,IN      LOAD,LBS/IN
                        0.00        0.210E+02
                      216.00        0.210E+02

  GROUP NO. 3

              DISTRIBUTED LOAD CURVE           2 POINTS

                        X,IN      LOAD,LBS/IN
                        0.00        0.420E+02
                      216.00        0.420E+02


* THE LOADING IS STATIC *


    KPYOP =  0     (CODE TO GENERATE P-Y CURVES)

    ( KPYOP = 1 IF P-Y YES; = 0 IF P-Y NO; = -1 IF P-Y ONLY )


* CONTROL PARAMETERS *
    TOLERANCE ON CONVERGENCE OF FOUNDATION REACTION      =  0.100E-04 IN
    TOLERANCE ON DETERMINATION OF DEFLECTIONS            =  0.100E-04 IN
    MAX NO OF ITERATIONS ALLOWED FOR FOUNDATION ANALYSIS =     100
    MAXIMUM NO. OF ITERATIONS ALLOWED FOR PILE ANALYSIS  =     100



* TABLE D *   ARRANGEMENT OF PILE GROUPS

  GROUP  CONNECT  NO OF PILE PILE NO  L-S CURVE  P-Y CURVE
    1      PIN         1        1         1          0
    2      PIN         1        1         1          0
    3      PIN         1        1         1          0
```

GROUP	VERT,IN	HOR,IN	SLOPE,IN/IN	GROUND,IN	SPRING,LBS-IN
1	0.0000E+00	-0.1500E+02	0.3218E+00	-0.3600E+02	0.0000E+00
2	0.0000E+00	-0.7500E+02	0.3218E+00	-0.3600E+02	0.0000E+00
3	0.0000E+00	-0.1410E+03	-0.3218E+00	-0.3600E+02	0.0000E+00
4	0.0000E+00	0.0000E+00	0.0000E+00	0.0000E+00	0.0000E+00

* TABLE E * PILE GEOMETRY AND PROPERTIES
PILE TYPE = 1 - DRIVEN PILE
= 2 - DRILLED SHAFT

PILE	SEC	INC	LENGTH, IN	E ,LBS/IN**2	PILE TYPE
1	1	91	0.1092E+04	0.2900E+08	1

PILE	FROM,IN	TO,IN	DIAM,IN	AREA,IN**2	I,IN**4
1	0.0000E+00	0.1092E+04	0.1400E+02	0.2140E+02	0.7290E+03

* THE PILE ABOVE IS OF LINEARLY ELASTIC MATERIAL *

* TABLE F * AXIAL LOAD VS SETTLEMENT

(THE LOAD-SETTLEMENT CURVE OF SINGLE PILE IS GENERATED INTERNALLY)

NUM OF CURVES 1

CURVE 1 NUM OF POINTS = 19

POINT	AXIAL LOAD,LBS	SETTLEMENT, IN
1	-0.1727E+06	-0.2221E+01
2	-0.1647E+06	-0.1208E+01
3	-0.1607E+06	-0.7010E+00
4	-0.1369E+06	-0.2609E+00
5	-0.1280E+06	-0.1948E+00
6	-0.4099E+05	-0.5077E-01
7	-0.1984E+05	-0.2476E-01
8	-0.3931E+04	-0.4928E-02
9	-0.3931E+03	-0.4928E-03
10	0.0000E+00	0.0000E+00
11	0.7478E+03	0.9072E-03
12	0.4682E+04	0.5805E-02
13	0.2246E+05	0.2777E-01
14	0.4482E+05	0.5521E-01
15	0.1311E+06	0.2001E+00
16	0.1406E+06	0.2675E+00
17	0.1691E+06	0.7159E+00
18	0.1763E+06	0.1228E+01
19	0.1881E+06	0.2248E+01

* TABLE H * SOIL DATA FOR AUTO P-Y CURVES

```
SOILS INFORMATION

 AT THE GROUND SURFACE          =     -36.00 IN

6 LAYER(S) OF SOIL

LAYER  1
THE SOIL IS A SOFT CLAY
X AT THE TOP OF THE LAYER        =     -36.00 IN
X AT THE BOTTOM OF THE LAYER     =     216.00 IN
MODULUS OF SUBGRADE REACTION     =  0.100E+00 LBS/IN**3

LAYER  2
THE SOIL IS A SILT
X AT THE TOP OF THE LAYER        =     216.00 IN
X AT THE BOTTOM OF THE LAYER     =     252.00 IN
MODULUS OF SUBGRADE REACTION     =  0.300E+02 LBS/IN**3

LAYER  3
THE SOIL IS A SOFT CLAY
X AT THE TOP OF THE LAYER        =     252.00 IN
X AT THE BOTTOM OF THE LAYER     =     720.00 IN
MODULUS OF SUBGRADE REACTION     =  0.300E+02 LBS/IN**3

LAYER  4
THE SOIL IS A STIFF CLAY BELOW THE WATER TABLE
X AT THE TOP OF THE LAYER        =     720.00 IN
X AT THE BOTTOM OF THE LAYER     =     973.00 IN
MODULUS OF SUBGRADE REACTION     =  0.100E+03 LBS/IN**3

LAYER  5
THE SOIL IS A SAND
X AT THE TOP OF THE LAYER        =     973.00 IN
X AT THE BOTTOM OF THE LAYER     =    1273.00 IN
MODULUS OF SUBGRADE REACTION     =  0.600E+02 LBS/IN**3

LAYER  6
THE SOIL IS A STIFF CLAY BELOW THE WATER TABLE
X AT THE TOP OF THE LAYER        =    1273.00 IN
X AT THE BOTTOM OF THE LAYER     =    1344.00 IN
MODULUS OF SUBGRADE REACTION     =  0.100E+03 LBS/IN**3


DISTRIBUTION OF EFFECTIVE UNIT WEIGHT WITH DEPTH
                  16 POINTS

            X,IN   WEIGHT,LBS/IN**3
        -36.0000     0.1010E-01
        108.0000     0.1010E-01
        108.0000     0.2170E-01
        216.0000     0.2170E-01
        216.0000     0.3150E-01
        252.0000     0.3150E-01
        252.0000     0.2170E-01
        720.0000     0.2170E-01
        720.0000     0.2750E-01
```

900.0000	0.2750E-01
900.0000	0.3330E-01
972.0000	0.3330E-01
972.0000	0.3440E-01
1273.0000	0.3440E-01
1273.0000	0.3210E-01
1344.0000	0.3210E-01

DISTRIBUTION OF STRENGTH PARAMETERS WITH DEPTH
16 POINTS

X IN	C LBS/IN**2	PHI,DEGREES	E50	FMAX LBS/IN**2	TIPMAX LBS/IN**2
-36.00	0.3333E-01	0.000	0.2500E-01	0.1000E+00	0.0000E+00
216.00	0.3333E-01	0.000	0.2500E-01	0.1000E+00	0.0000E+00
216.00	0.1390E+01	15.000	0.2500E-01	0.2400E+01	0.0000E+00
252.00	0.1390E+01	15.000	0.2500E-01	0.2700E+01	0.0000E+00
252.00	0.1390E+01	0.000	0.2500E-01	0.1390E+01	0.0000E+00
408.00	0.1390E+01	0.000	0.2500E-01	0.1390E+01	0.0000E+00
408.00	0.2590E+01	0.000	0.2000E-01	0.2590E+01	0.0000E+00
720.00	0.4100E+01	0.000	0.1000E-01	0.4100E+01	0.0000E+00
720.00	0.4100E+01	0.000	0.1000E-01	0.4100E+01	0.0000E+00
780.00	0.4300E+01	0.000	0.1000E-01	0.4300E+01	0.0000E+00
780.00	0.5500E+01	0.000	0.1000E-01	0.5500E+01	0.0000E+00
973.00	0.5500E+01	0.000	0.1000E-01	0.5500E+01	0.0000E+00
973.00	0.0000E+00	30.000	0.0000E+00	0.1300E+02	0.0000E+00
1273.00	0.0000E+00	30.000	0.0000E+00	0.1400E+02	0.0000E+00
1273.00	0.6800E+01	0.000	0.1000E-01	0.6800E+01	0.0000E+00
1344.00	0.6800E+01	0.000	0.1000E-01	0.6800E+01	0.0000E+00

REDUCTION FACTORS FOR CLOSELY-SPACED PILE GROUPS

GROUP NO	P-FACTOR	Y-FACTOR
1	1.00	1.00
2	0.83	1.00
3	0.87	1.00

T-wall Example: F.S. 10.0, P.S. -1.0, Pervious 50% Unbal. Force on left pile

***** COMPUTATION RESULTS *****

VERT. LOAD, LBS	HORI. LOAD, LBS	MOMENT,IN-LBS
0.5273E+05	0.3723E+05	0.1032E+07

DISPLACEMENT OF GROUPED PILE FOUNDATION

```
          VERTICAL,IN    HORIZONTAL,IN    ROTATION,RAD

         -0.2048E+00     0.5260E+00       0.2313E-02

     NUMBER OF ITERATIONS =   4


  * TABLE I *   COMPUTATION ON INDIVIDUAL PILE

    * PILE GROUP *  1

 PILE TOP DISPLACEMENTS AND REACTIONS

       THE GLOBAL STRUCTURE COORDINATE SYSTEM
       --------------------------------------

 XDISPL,IN   YDISPL,IN   SLOPE   AXIAL,LBS  LAT,LBS  BM,LBS-IN
STRESS,LBS/IN**2

-0.170E+00  0.526E+00 -.192E-02 0.421E+04 0.307E+02 0.000E+00   0.187E+03

       THE LOCAL MEMBER COORDINATE SYSTEM
       ----------------------------------

 XDISPL,IN   YDISPL,IN   SLOPE   AXIAL,LBS  LAT,LBS  BM,LBS-IN
STRESS,LBS/IN**2

 0.496E-02  0.553E+00 -.192E-02 0.400E+04-0.130E+04 0.000E+00   0.187E+03

     LATERALLY LOADED PILE
```

X	DEFLECTION	MOMENT	SHEAR	SOIL REACTION	TOTAL STRESS	FLEXURAL RIGIDITY
IN	IN	LBS-IN	LBS	LBS/IN	LBS/IN**2	LBS-IN**2
0.00	0.553E+00	0.000E+00	-0.106E+04	0.180E+01	0.187E+03	0.211E+11
12.00	0.530E+00	0.126E+05	-0.944E+03	0.178E+01	0.308E+03	0.211E+11
24.00	0.507E+00	0.225E+05	-0.714E+03	0.175E+01	0.403E+03	0.211E+11
36.00	0.483E+00	0.296E+05	-0.482E+03	0.172E+01	0.471E+03	0.211E+11
48.00	0.460E+00	0.339E+05	-0.251E+03	0.169E+01	0.512E+03	0.211E+11
60.00	0.436E+00	0.354E+05	-0.191E+02	0.166E+01	0.527E+03	0.211E+11
72.00	0.412E+00	0.341E+05	0.213E+03	0.163E+01	0.515E+03	0.211E+11
84.00	0.388E+00	0.301E+05	0.446E+03	0.160E+01	0.476E+03	0.211E+11
96.00	0.364E+00	0.233E+05	0.679E+03	0.157E+01	0.410E+03	0.211E+11

108.00	0.339E+00	0.136E+05	0.912E+03	0.153E+01	0.318E+03	0.211E+11
120.00	0.315E+00	0.116E+04	0.115E+04	0.149E+01	0.198E+03	0.211E+11
132.00	0.290E+00	-0.141E+05	0.138E+04	0.145E+01	0.322E+03	0.211E+11
144.00	0.265E+00	-0.322E+05	0.162E+04	0.141E+01	0.496E+03	0.211E+11
156.00	0.241E+00	-0.530E+05	0.185E+04	0.137E+01	0.696E+03	0.211E+11
168.00	0.217E+00	-0.768E+05	0.209E+04	0.132E+01	0.924E+03	0.211E+11
180.00	0.194E+00	-0.103E+06	0.232E+04	0.127E+01	0.118E+04	0.211E+11
192.00	0.171E+00	-0.133E+06	0.256E+04	0.122E+01	0.146E+04	0.211E+11
204.00	0.149E+00	-0.165E+06	0.280E+04	0.116E+01	0.177E+04	0.211E+11
216.00	0.128E+00	-0.200E+06	0.270E+04	0.572E+02	0.211E+04	0.211E+11
228.00	0.109E+00	-0.230E+06	0.196E+04	0.878E+02	0.239E+04	0.211E+11
240.00	0.912E-01	-0.247E+06	0.791E+03	0.106E+03	0.256E+04	0.211E+11
252.00	0.751E-01	-0.249E+06	0.356E+02	0.196E+02	0.258E+04	0.211E+11
264.00	0.607E-01	-0.248E+06	-0.205E+03	0.206E+02	0.257E+04	0.211E+11
276.00	0.479E-01	-0.244E+06	-0.456E+03	0.212E+02	0.253E+04	0.211E+11
288.00	0.369E-01	-0.237E+06	-0.712E+03	0.214E+02	0.246E+04	0.211E+11
300.00	0.275E-01	-0.227E+06	-0.967E+03	0.212E+02	0.237E+04	0.211E+11
312.00	0.196E-01	-0.214E+06	-0.122E+04	0.206E+02	0.224E+04	0.211E+11
324.00	0.131E-01	-0.198E+06	-0.146E+04	0.194E+02	0.209E+04	0.211E+11
336.00	0.805E-02	-0.179E+06	-0.168E+04	0.177E+02	0.191E+04	0.211E+11
348.00	0.418E-02	-0.158E+06	-0.188E+04	0.147E+02	0.170E+04	0.211E+11
360.00	0.139E-02	-0.134E+06	-0.202E+04	0.102E+02	0.148E+04	0.211E+11
372.00	-0.487E-03	-0.109E+06	-0.204E+04	-0.728E+01	0.123E+04	0.211E+11
384.00	-0.162E-02	-0.852E+05	-0.193E+04	-0.108E+02	0.100E+04	0.211E+11
396.00	-0.217E-02	-0.627E+05	-0.180E+04	-0.119E+02	0.789E+03	0.211E+11
408.00	-0.230E-02	-0.420E+05	-0.159E+04	-0.234E+02	0.590E+03	0.211E+11
420.00	-0.214E-02	-0.247E+05	-0.130E+04	-0.244E+02	0.424E+03	0.211E+11
432.00	-0.181E-02	-0.108E+05	-0.101E+04	-0.238E+02	0.291E+03	0.211E+11
444.00	-0.141E-02	-0.421E+03	-0.733E+03	-0.225E+02	0.191E+03	0.211E+11
456.00	-0.101E-02	0.676E+04	-0.474E+03	-0.207E+02	0.252E+03	0.211E+11
468.00	-0.647E-03	0.110E+05	-0.240E+03	-0.183E+02	0.292E+03	0.211E+11
480.00	-0.363E-03	0.125E+05	-0.368E+02	-0.155E+02	0.307E+03	0.211E+11
492.00	-0.165E-03	0.118E+05	0.130E+03	-0.123E+02	0.301E+03	0.211E+11
504.00	-0.465E-04	0.940E+04	0.254E+03	-0.832E+01	0.277E+03	0.211E+11
516.00	0.748E-05	0.575E+04	0.277E+03	0.452E+01	0.242E+03	0.211E+11
528.00	0.223E-04	0.276E+04	0.209E+03	0.681E+01	0.213E+03	0.211E+11
540.00	0.184E-04	0.743E+03	0.128E+03	0.658E+01	0.194E+03	0.211E+11
552.00	0.943E-05	-0.323E+03	0.563E+02	0.543E+01	0.190E+03	0.211E+11
564.00	0.264E-05	-0.608E+03	0.160E+01	0.368E+01	0.193E+03	0.211E+11
576.00	0.200E-08	-0.362E+03	-0.232E+02	0.448E+00	0.190E+03	0.211E+11
588.00	-0.177E-06	-0.514E+02	-0.161E+02	-0.163E+01	0.187E+03	0.211E+11
600.00	-0.493E-08	0.245E+02	-0.217E+01	-0.692E+00	0.187E+03	0.211E+11
612.00	0.875E-10	0.750E+00	0.102E+01	0.159E+00	0.187E+03	0.211E+11
624.00	0.841E-14	-0.128E-01	0.312E-01	0.538E-02	0.187E+03	0.211E+11
636.00	-0.136E-15	-0.127E-05	-0.535E-03	-0.891E-04	0.187E+03	0.211E+11
648.00	-0.135E-19	0.199E-07	-0.531E-07	-0.913E-08	0.187E+03	0.211E+11
660.00	0.200E-21	0.205E-11	0.830E-09	0.138E-09	0.187E+03	0.211E+11
672.00	0.206E-25	-0.293E-13	0.853E-13	0.146E-13	0.187E+03	0.211E+11
684.00	-0.279E-27	-0.310E-17	-0.122E-14	-0.204E-15	0.187E+03	0.211E+11
696.00	-0.296E-31	0.410E-19	-0.129E-18	-0.221E-19	0.187E+03	0.211E+11
708.00	0.370E-33	0.233E-23	0.171E-20	0.285E-21	0.187E+03	0.211E+11
720.00	0.144E-31	0.149E-23	0.632E-25	0.109E-26	0.187E+03	0.211E+11
732.00	0.183E-31	0.815E-24	0.482E-25	0.140E-26	0.187E+03	0.211E+11
744.00	0.166E-31	0.338E-24	0.320E-25	0.130E-26	0.187E+03	0.211E+11
756.00	0.126E-31	0.470E-25	0.182E-25	0.100E-26	0.187E+03	0.211E+11
768.00	0.833E-32	-0.995E-25	0.819E-26	0.670E-27	0.187E+03	0.211E+11
780.00	0.471E-32	-0.150E-24	0.186E-26	0.385E-27	0.187E+03	0.211E+11

```
     792.00  0.211E-32 -0.144E-24 -0.150E-26  0.175E-27  0.187E+03  0.211E+11
     804.00  0.493E-33 -0.114E-24 -0.279E-26  0.414E-28  0.187E+03  0.211E+11
     816.00 -0.351E-33 -0.772E-25 -0.286E-26 -0.299E-28  0.187E+03  0.211E+11
     828.00 -0.670E-33 -0.450E-25 -0.234E-26 -0.579E-28  0.187E+03  0.211E+11
     840.00 -0.682E-33 -0.211E-25 -0.163E-26 -0.597E-28  0.187E+03  0.211E+11
     852.00 -0.551E-33 -0.584E-26 -0.979E-27 -0.489E-28  0.187E+03  0.211E+11
     864.00 -0.379E-33  0.239E-26 -0.481E-27 -0.341E-28  0.187E+03  0.211E+11
     876.00 -0.224E-33  0.570E-26 -0.154E-27 -0.204E-28  0.187E+03  0.211E+11
     888.00 -0.108E-33  0.608E-26  0.290E-28 -0.998E-29  0.187E+03  0.211E+11
     900.00 -0.332E-34  0.501E-26  0.107E-27 -0.311E-29  0.187E+03  0.211E+11
     912.00  0.749E-35  0.350E-26  0.122E-27  0.710E-30  0.187E+03  0.211E+11
     924.00  0.244E-34  0.208E-26  0.104E-27  0.234E-29  0.187E+03  0.211E+11
     936.00  0.270E-34  0.101E-26  0.738E-28  0.263E-29  0.187E+03  0.211E+11
     948.00  0.228E-34  0.314E-27  0.446E-28  0.224E-29  0.187E+03  0.211E+11
     960.00  0.164E-34 -0.599E-28  0.213E-28  0.164E-29  0.187E+03  0.211E+11
     972.00  0.105E-34 -0.197E-27  0.512E-29  0.106E-29  0.187E+03  0.211E+11
     984.00  0.590E-35 -0.183E-27 -0.169E-29  0.753E-31  0.187E+03  0.211E+11
     996.00  0.255E-35 -0.157E-27 -0.234E-29  0.343E-31  0.187E+03  0.211E+11
    1008.00  0.260E-36 -0.126E-27 -0.257E-29  0.368E-32  0.187E+03  0.211E+11
    1020.00 -0.117E-35 -0.953E-28 -0.249E-29 -0.174E-31  0.187E+03  0.211E+11
    1032.00 -0.194E-35 -0.666E-28 -0.220E-29 -0.304E-31  0.187E+03  0.211E+11
    1044.00 -0.226E-35 -0.424E-28 -0.180E-29 -0.370E-31  0.187E+03  0.211E+11
    1056.00 -0.230E-35 -0.234E-28 -0.134E-29 -0.392E-31  0.187E+03  0.211E+11
    1068.00 -0.217E-35 -0.102E-28 -0.875E-30 -0.387E-31  0.187E+03  0.211E+11
    1080.00 -0.198E-35 -0.245E-29 -0.423E-30 -0.366E-31  0.187E+03  0.211E+11
    1092.00 -0.177E-35  0.000E+00 -0.155E-44 -0.340E-31  0.187E+03  0.211E+11

     NUMBER OF ITERATIONS IN LLP =    14


       * PILE GROUP *  2


 PILE TOP DISPLACEMENTS AND REACTIONS


       THE GLOBAL STRUCTURE COORDINATE SYSTEM
       --------------------------------------

 XDISPL,IN   YDISPL,IN   SLOPE   AXIAL,LBS  LAT,LBS  BM,LBS-IN
STRESS,LBS/IN**2

-0.314E-01  0.526E+00 -.164E-02 0.890E+05 0.279E+05 0.000E+00   0.436E+04


       THE LOCAL MEMBER COORDINATE SYSTEM
       ----------------------------------

 XDISPL,IN   YDISPL,IN   SLOPE   AXIAL,LBS  LAT,LBS  BM,LBS-IN
STRESS,LBS/IN**2

 0.137E+00  0.509E+00 -.164E-02 0.933E+05-0.165E+04 0.000E+00   0.436E+04


          LATERALLY LOADED PILE
```

X	DEFLECTION	MOMENT	SHEAR	SOIL REACTION	TOTAL STRESS	FLEXURAL RIGIDITY
IN	IN	LBS-IN	LBS	LBS/IN	LBS/IN**2	LBS-IN**2
0.00	0.509E+00	0.000E+00	-0.141E+04	0.146E+01	0.436E+04	0.211E+11
12.00	0.489E+00	0.151E+05	-0.129E+04	0.144E+01	0.450E+04	0.211E+11
24.00	0.470E+00	0.273E+05	-0.106E+04	0.142E+01	0.462E+04	0.211E+11
36.00	0.450E+00	0.367E+05	-0.820E+03	0.140E+01	0.471E+04	0.211E+11
48.00	0.429E+00	0.432E+05	-0.585E+03	0.138E+01	0.477E+04	0.211E+11
60.00	0.409E+00	0.469E+05	-0.349E+03	0.136E+01	0.481E+04	0.211E+11
72.00	0.388E+00	0.478E+05	-0.114E+03	0.134E+01	0.482E+04	0.211E+11
84.00	0.367E+00	0.457E+05	0.123E+03	0.131E+01	0.480E+04	0.211E+11
96.00	0.346E+00	0.408E+05	0.359E+03	0.129E+01	0.475E+04	0.211E+11
108.00	0.324E+00	0.331E+05	0.596E+03	0.126E+01	0.468E+04	0.211E+11
120.00	0.302E+00	0.225E+05	0.833E+03	0.123E+01	0.457E+04	0.211E+11
132.00	0.280E+00	0.900E+04	0.107E+04	0.120E+01	0.444E+04	0.211E+11
144.00	0.258E+00	-0.734E+04	0.131E+04	0.117E+01	0.443E+04	0.211E+11
156.00	0.236E+00	-0.265E+05	0.155E+04	0.113E+01	0.461E+04	0.211E+11
168.00	0.214E+00	-0.486E+05	0.178E+04	0.110E+01	0.482E+04	0.211E+11
180.00	0.192E+00	-0.734E+05	0.202E+04	0.106E+01	0.506E+04	0.211E+11
192.00	0.171E+00	-0.101E+06	0.226E+04	0.102E+01	0.533E+04	0.211E+11
204.00	0.150E+00	-0.132E+06	0.250E+04	0.974E+00	0.562E+04	0.211E+11
216.00	0.131E+00	-0.165E+06	0.246E+04	0.487E+02	0.594E+04	0.211E+11
228.00	0.113E+00	-0.194E+06	0.184E+04	0.757E+02	0.622E+04	0.211E+11
240.00	0.955E-01	-0.212E+06	0.826E+03	0.929E+02	0.640E+04	0.211E+11
252.00	0.799E-01	-0.217E+06	0.168E+03	0.167E+02	0.644E+04	0.211E+11
264.00	0.657E-01	-0.219E+06	-0.379E+02	0.176E+02	0.646E+04	0.211E+11
276.00	0.531E-01	-0.219E+06	-0.253E+03	0.183E+02	0.646E+04	0.211E+11
288.00	0.419E-01	-0.215E+06	-0.475E+03	0.186E+02	0.642E+04	0.211E+11
300.00	0.322E-01	-0.209E+06	-0.699E+03	0.187E+02	0.637E+04	0.211E+11
312.00	0.239E-01	-0.200E+06	-0.921E+03	0.184E+02	0.628E+04	0.211E+11
324.00	0.170E-01	-0.188E+06	-0.114E+04	0.177E+02	0.617E+04	0.211E+11
336.00	0.114E-01	-0.174E+06	-0.134E+04	0.166E+02	0.603E+04	0.211E+11
348.00	0.697E-02	-0.157E+06	-0.153E+04	0.146E+02	0.587E+04	0.211E+11
360.00	0.361E-02	-0.138E+06	-0.169E+04	0.117E+02	0.568E+04	0.211E+11
372.00	0.118E-02	-0.117E+06	-0.181E+04	0.803E+01	0.548E+04	0.211E+11
384.00	-0.453E-03	-0.951E+05	-0.182E+04	-0.594E+01	0.527E+04	0.211E+11
396.00	-0.144E-02	-0.738E+05	-0.173E+04	-0.865E+01	0.507E+04	0.211E+11
408.00	-0.192E-02	-0.537E+05	-0.157E+04	-0.184E+02	0.487E+04	0.211E+11
420.00	-0.203E-02	-0.362E+05	-0.134E+04	-0.200E+02	0.471E+04	0.211E+11
432.00	-0.190E-02	-0.216E+05	-0.110E+04	-0.201E+02	0.456E+04	0.211E+11
444.00	-0.162E-02	-0.983E+04	-0.859E+03	-0.196E+02	0.445E+04	0.211E+11
456.00	-0.127E-02	-0.910E+03	-0.629E+03	-0.186E+02	0.437E+04	0.211E+11
468.00	-0.918E-03	0.533E+04	-0.414E+03	-0.172E+02	0.441E+04	0.211E+11
480.00	-0.602E-03	0.909E+04	-0.219E+03	-0.153E+02	0.444E+04	0.211E+11
492.00	-0.347E-03	0.106E+05	-0.480E+02	-0.131E+02	0.446E+04	0.211E+11
504.00	-0.165E-03	0.103E+05	0.941E+02	-0.105E+02	0.446E+04	0.211E+11
516.00	-0.533E-04	0.841E+04	0.202E+03	-0.745E+01	0.444E+04	0.211E+11
528.00	0.143E-05	0.545E+04	0.234E+03	0.208E+01	0.441E+04	0.211E+11
540.00	0.191E-04	0.279E+04	0.189E+03	0.554E+01	0.438E+04	0.211E+11
552.00	0.177E-04	0.924E+03	0.122E+03	0.557E+01	0.437E+04	0.211E+11
564.00	0.100E-04	-0.140E+03	0.601E+02	0.475E+01	0.436E+04	0.211E+11
576.00	0.332E-05	-0.519E+03	0.111E+02	0.341E+01	0.436E+04	0.211E+11

588.00	0.151E-06	-0.408E+03	-0.181E+02	0.145E+01	0.436E+04	0.211E+11
600.00	-0.238E-06	-0.865E+02	-0.180E+02	-0.147E+01	0.436E+04	0.211E+11
612.00	-0.375E-07	0.239E+02	-0.383E+01	-0.893E+00	0.436E+04	0.211E+11
624.00	0.792E-10	0.552E+01	0.995E+00	0.890E-01	0.436E+04	0.211E+11
636.00	0.183E-11	-0.111E-01	0.230E+00	0.385E-01	0.436E+04	0.211E+11
648.00	-0.109E-15	-0.268E-03	-0.462E-03	-0.733E-04	0.436E+04	0.211E+11
660.00	-0.269E-17	0.152E-07	-0.112E-04	-0.186E-05	0.436E+04	0.211E+11
672.00	0.141E-21	0.395E-09	0.632E-09	0.999E-10	0.436E+04	0.211E+11
684.00	0.376E-23	-0.195E-13	0.165E-10	0.274E-11	0.436E+04	0.211E+11
696.00	-0.171E-27	-0.553E-15	-0.814E-15	-0.128E-15	0.436E+04	0.211E+11
708.00	-0.499E-29	0.127E-19	-0.230E-16	-0.384E-17	0.436E+04	0.211E+11
720.00	0.743E-28	0.824E-20	0.342E-21	0.562E-23	0.436E+04	0.211E+11
732.00	0.975E-28	0.455E-20	0.263E-21	0.749E-23	0.436E+04	0.211E+11
744.00	0.898E-28	0.193E-20	0.176E-21	0.700E-23	0.436E+04	0.211E+11
756.00	0.689E-28	0.321E-21	0.101E-21	0.546E-23	0.436E+04	0.211E+11
768.00	0.458E-28	-0.502E-21	0.463E-22	0.368E-23	0.436E+04	0.211E+11
780.00	0.262E-28	-0.794E-21	0.114E-22	0.214E-23	0.436E+04	0.211E+11
792.00	0.119E-28	-0.778E-21	-0.737E-23	0.988E-24	0.436E+04	0.211E+11
804.00	0.300E-29	-0.620E-21	-0.148E-22	0.252E-24	0.436E+04	0.211E+11
816.00	-0.172E-29	-0.424E-21	-0.154E-22	-0.147E-24	0.436E+04	0.211E+11
828.00	-0.355E-29	-0.250E-21	-0.127E-22	-0.307E-24	0.436E+04	0.211E+11
840.00	-0.368E-29	-0.119E-21	-0.895E-23	-0.322E-24	0.436E+04	0.211E+11
852.00	-0.300E-29	-0.347E-22	-0.542E-23	-0.266E-24	0.436E+04	0.211E+11
864.00	-0.208E-29	0.112E-22	-0.270E-23	-0.187E-24	0.436E+04	0.211E+11
876.00	-0.124E-29	0.301E-22	-0.892E-24	-0.113E-24	0.436E+04	0.211E+11
888.00	-0.606E-30	0.328E-22	0.123E-24	-0.560E-25	0.436E+04	0.211E+11
900.00	-0.193E-30	0.273E-22	0.568E-24	-0.181E-25	0.436E+04	0.211E+11
912.00	0.331E-31	0.192E-22	0.657E-24	0.314E-26	0.436E+04	0.211E+11
924.00	0.129E-30	0.115E-22	0.564E-24	0.124E-25	0.436E+04	0.211E+11
936.00	0.146E-30	0.566E-23	0.405E-24	0.142E-25	0.436E+04	0.211E+11
948.00	0.124E-30	0.182E-23	0.247E-24	0.122E-25	0.436E+04	0.211E+11
960.00	0.906E-31	-0.260E-24	0.119E-24	0.902E-26	0.436E+04	0.211E+11
972.00	0.585E-31	-0.104E-23	0.295E-25	0.589E-26	0.436E+04	0.211E+11
984.00	0.335E-31	-0.973E-24	-0.842E-26	0.427E-27	0.436E+04	0.211E+11
996.00	0.151E-31	-0.843E-24	-0.122E-25	0.203E-27	0.436E+04	0.211E+11
1008.00	0.244E-32	-0.683E-24	-0.136E-25	0.346E-28	0.436E+04	0.211E+11
1020.00	-0.554E-32	-0.518E-24	-0.133E-25	-0.826E-28	0.436E+04	0.211E+11
1032.00	-0.999E-32	-0.365E-24	-0.119E-25	-0.156E-27	0.436E+04	0.211E+11
1044.00	-0.120E-31	-0.233E-24	-0.979E-26	-0.195E-27	0.436E+04	0.211E+11
1056.00	-0.123E-31	-0.130E-24	-0.736E-26	-0.210E-27	0.436E+04	0.211E+11
1068.00	-0.118E-31	-0.568E-25	-0.483E-26	-0.210E-27	0.436E+04	0.211E+11
1080.00	-0.109E-31	-0.138E-25	-0.236E-26	-0.202E-27	0.436E+04	0.211E+11
1092.00	-0.993E-32	0.000E+00	-0.143E-40	-0.191E-27	0.436E+04	0.211E+11

NUMBER OF ITERATIONS IN LLP = 13

* PILE GROUP * 3

PILE TOP DISPLACEMENTS AND REACTIONS

THE GLOBAL STRUCTURE COORDINATE SYSTEM

```
 XDISPL,IN   YDISPL,IN   SLOPE   AXIAL,LBS  LAT,LBS  BM,LBS-IN
STRESS,LBS/IN**2

 0.121E+00  0.526E+00 -.997E-03-0.405E+05 0.927E+04 0.000E+00   0.193E+04


       THE LOCAL MEMBER COORDINATE SYSTEM
       ----------------------------------

 XDISPL,IN   YDISPL,IN   SLOPE   AXIAL,LBS  LAT,LBS  BM,LBS-IN
STRESS,LBS/IN**2

-0.513E-01  0.537E+00 -.997E-03-0.413E+05-0.400E+04 0.000E+00   0.193E+04


           LATERALLY LOADED PILE
```

X IN	DEFLECTION IN	MOMENT LBS-IN	SHEAR LBS	SOIL REACTION LBS/IN	TOTAL STRESS LBS/IN**2	FLEXURAL RIGIDITY LBS-IN**2
0.00	0.537E+00	0.000E+00	-0.351E+04	0.154E+01	0.193E+04	0.211E+11
12.00	0.525E+00	0.426E+05	-0.326E+04	0.153E+01	0.234E+04	0.211E+11
24.00	0.513E+00	0.793E+05	-0.278E+04	0.152E+01	0.269E+04	0.211E+11
36.00	0.500E+00	0.110E+06	-0.229E+04	0.151E+01	0.299E+04	0.211E+11
48.00	0.487E+00	0.135E+06	-0.181E+04	0.149E+01	0.323E+04	0.211E+11
60.00	0.472E+00	0.155E+06	-0.132E+04	0.148E+01	0.342E+04	0.211E+11
72.00	0.457E+00	0.168E+06	-0.834E+03	0.146E+01	0.355E+04	0.211E+11
84.00	0.440E+00	0.176E+06	-0.347E+03	0.144E+01	0.362E+04	0.211E+11
96.00	0.422E+00	0.178E+06	0.140E+03	0.143E+01	0.364E+04	0.211E+11
108.00	0.403E+00	0.174E+06	0.627E+03	0.140E+01	0.360E+04	0.211E+11
120.00	0.383E+00	0.165E+06	0.111E+04	0.138E+01	0.351E+04	0.211E+11
132.00	0.362E+00	0.149E+06	0.160E+04	0.135E+01	0.336E+04	0.211E+11
144.00	0.339E+00	0.128E+06	0.209E+04	0.132E+01	0.316E+04	0.211E+11
156.00	0.316E+00	0.101E+06	0.258E+04	0.129E+01	0.290E+04	0.211E+11
168.00	0.292E+00	0.681E+05	0.307E+04	0.126E+01	0.258E+04	0.211E+11
180.00	0.267E+00	0.294E+05	0.356E+04	0.122E+01	0.221E+04	0.211E+11
192.00	0.243E+00	-0.152E+05	0.405E+04	0.119E+01	0.208E+04	0.211E+11
204.00	0.218E+00	-0.656E+05	0.454E+04	0.114E+01	0.256E+04	0.211E+11
216.00	0.194E+00	-0.122E+06	0.458E+04	0.749E+02	0.310E+04	0.211E+11
228.00	0.171E+00	-0.174E+06	0.367E+04	0.119E+03	0.360E+04	0.211E+11
240.00	0.149E+00	-0.208E+06	0.206E+04	0.150E+03	0.393E+04	0.211E+11
252.00	0.128E+00	-0.221E+06	0.103E+04	0.203E+02	0.406E+04	0.211E+11
264.00	0.109E+00	-0.231E+06	0.781E+03	0.217E+02	0.415E+04	0.211E+11
276.00	0.915E-01	-0.238E+06	0.515E+03	0.227E+02	0.422E+04	0.211E+11
288.00	0.755E-01	-0.242E+06	0.237E+03	0.235E+02	0.426E+04	0.211E+11
300.00	0.612E-01	-0.243E+06	-0.479E+02	0.240E+02	0.426E+04	0.211E+11
312.00	0.486E-01	-0.240E+06	-0.336E+03	0.241E+02	0.424E+04	0.211E+11
324.00	0.376E-01	-0.234E+06	-0.624E+03	0.239E+02	0.418E+04	0.211E+11
336.00	0.282E-01	-0.224E+06	-0.907E+03	0.233E+02	0.408E+04	0.211E+11
348.00	0.203E-01	-0.211E+06	-0.118E+04	0.216E+02	0.396E+04	0.211E+11
360.00	0.139E-01	-0.195E+06	-0.142E+04	0.190E+02	0.381E+04	0.211E+11

372.00	0.875E-02	-0.177E+06	-0.163E+04	0.163E+02	0.363E+04	0.211E+11
384.00	0.484E-02	-0.156E+06	-0.181E+04	0.134E+02	0.343E+04	0.211E+11
396.00	0.200E-02	-0.133E+06	-0.195E+04	0.995E+01	0.321E+04	0.211E+11
408.00	0.559E-04	-0.109E+06	-0.204E+04	0.539E+01	0.298E+04	0.211E+11
420.00	-0.114E-02	-0.840E+05	-0.197E+04	-0.172E+02	0.274E+04	0.211E+11
432.00	-0.177E-02	-0.615E+05	-0.175E+04	-0.204E+02	0.252E+04	0.211E+11
444.00	-0.198E-02	-0.420E+05	-0.149E+04	-0.218E+02	0.233E+04	0.211E+11
456.00	-0.190E-02	-0.257E+05	-0.123E+04	-0.221E+02	0.218E+04	0.211E+11
468.00	-0.164E-02	-0.125E+05	-0.968E+03	-0.216E+02	0.205E+04	0.211E+11
480.00	-0.130E-02	-0.246E+04	-0.715E+03	-0.206E+02	0.195E+04	0.211E+11
492.00	-0.949E-03	0.462E+04	-0.477E+03	-0.190E+02	0.198E+04	0.211E+11
504.00	-0.625E-03	0.896E+04	-0.261E+03	-0.170E+02	0.202E+04	0.211E+11
516.00	-0.362E-03	0.109E+05	-0.714E+02	-0.146E+02	0.204E+04	0.211E+11
528.00	-0.173E-03	0.107E+05	0.862E+02	-0.117E+02	0.203E+04	0.211E+11
540.00	-0.561E-04	0.877E+04	0.206E+03	-0.829E+01	0.202E+04	0.211E+11
552.00	0.741E-06	0.570E+04	0.246E+03	0.168E+01	0.199E+04	0.211E+11
564.00	0.187E-04	0.287E+04	0.200E+03	0.602E+01	0.196E+04	0.211E+11
576.00	0.172E-04	0.910E+03	0.127E+03	0.603E+01	0.194E+04	0.211E+11
588.00	0.941E-05	-0.181E+03	0.604E+02	0.510E+01	0.193E+04	0.211E+11
600.00	0.288E-05	-0.539E+03	0.847E+01	0.357E+01	0.194E+04	0.211E+11
612.00	0.284E-07	-0.384E+03	-0.198E+02	0.115E+01	0.193E+04	0.211E+11
624.00	-0.207E-06	-0.632E+02	-0.171E+02	-0.160E+01	0.193E+04	0.211E+11
636.00	-0.122E-07	0.268E+02	-0.271E+01	-0.799E+00	0.193E+04	0.211E+11
648.00	0.123E-09	0.183E+01	0.112E+01	0.161E+00	0.193E+04	0.211E+11
660.00	0.251E-13	-0.180E-01	0.763E-01	0.130E-01	0.193E+04	0.211E+11
672.00	-0.176E-15	-0.374E-05	-0.750E-03	-0.125E-03	0.193E+04	0.211E+11
684.00	-0.361E-19	0.258E-07	-0.156E-06	-0.264E-07	0.193E+04	0.211E+11
696.00	0.239E-21	0.538E-11	0.108E-08	0.179E-09	0.193E+04	0.211E+11
708.00	0.488E-25	-0.186E-13	0.225E-12	0.375E-13	0.193E+04	0.211E+11
720.00	-0.113E-21	-0.119E-13	-0.501E-15	-0.853E-17	0.193E+04	0.211E+11
732.00	-0.145E-21	-0.652E-14	-0.383E-15	-0.111E-16	0.193E+04	0.211E+11
744.00	-0.132E-21	-0.272E-14	-0.255E-15	-0.103E-16	0.193E+04	0.211E+11
756.00	-0.100E-21	-0.400E-15	-0.146E-15	-0.796E-17	0.193E+04	0.211E+11
768.00	-0.664E-22	0.774E-15	-0.660E-16	-0.534E-17	0.193E+04	0.211E+11
780.00	-0.377E-22	0.118E-14	-0.154E-16	-0.308E-17	0.193E+04	0.211E+11
792.00	-0.170E-22	0.114E-14	0.115E-16	-0.141E-17	0.193E+04	0.211E+11
804.00	-0.408E-23	0.903E-15	0.220E-16	-0.343E-18	0.193E+04	0.211E+11
816.00	0.269E-23	0.615E-15	0.226E-16	0.229E-18	0.193E+04	0.211E+11
828.00	0.526E-23	0.359E-15	0.185E-16	0.455E-18	0.193E+04	0.211E+11
840.00	0.539E-23	0.170E-15	0.130E-16	0.473E-18	0.193E+04	0.211E+11
852.00	0.437E-23	0.478E-16	0.782E-17	0.388E-18	0.193E+04	0.211E+11
864.00	0.302E-23	-0.180E-16	0.386E-17	0.272E-18	0.193E+04	0.211E+11
876.00	0.179E-23	-0.448E-16	0.125E-17	0.163E-18	0.193E+04	0.211E+11
888.00	0.867E-24	-0.480E-16	-0.207E-18	0.801E-19	0.193E+04	0.211E+11
900.00	0.271E-24	-0.397E-16	-0.840E-18	0.254E-19	0.193E+04	0.211E+11
912.00	-0.544E-25	-0.278E-16	-0.961E-18	-0.516E-20	0.193E+04	0.211E+11
924.00	-0.190E-24	-0.166E-16	-0.821E-18	-0.183E-19	0.193E+04	0.211E+11
936.00	-0.213E-24	-0.810E-17	-0.587E-18	-0.207E-19	0.193E+04	0.211E+11
948.00	-0.181E-24	-0.255E-17	-0.356E-18	-0.178E-19	0.193E+04	0.211E+11
960.00	-0.131E-24	0.433E-18	-0.171E-18	-0.130E-19	0.193E+04	0.211E+11
972.00	-0.840E-25	0.154E-17	-0.417E-19	-0.847E-20	0.193E+04	0.211E+11
984.00	-0.477E-25	0.143E-17	0.127E-19	-0.608E-21	0.193E+04	0.211E+11
996.00	-0.211E-25	0.123E-17	0.181E-19	-0.284E-21	0.193E+04	0.211E+11
1008.00	-0.284E-26	0.996E-18	0.200E-19	-0.403E-22	0.193E+04	0.211E+11
1020.00	0.859E-26	0.753E-18	0.195E-19	0.128E-21	0.193E+04	0.211E+11
1032.00	0.149E-25	0.528E-18	0.173E-19	0.233E-21	0.193E+04	0.211E+11
1044.00	0.176E-25	0.336E-18	0.142E-19	0.288E-21	0.193E+04	0.211E+11

```
1056.00  0.180E-25  0.187E-18  0.106E-19  0.307E-21  0.193E+04  0.211E+11
1068.00  0.171E-25  0.811E-19  0.696E-20  0.305E-21  0.193E+04  0.211E+11
1080.00  0.157E-25  0.196E-19  0.339E-20  0.291E-21  0.193E+04  0.211E+11
1092.00  0.142E-25  0.211E-33 -0.227E-34  0.273E-21  0.193E+04  0.211E+11

                NUMBER OF ITERATIONS IN LLP =    14
```

Attachment 6 – Spencer's method analysis with piles as reinforcement (Figure 20).

```
HEADING
    T-Wall Deep Seated Analysis
    Analysis without piles

PROFILE LINES
         1    1 Layer 3 (CH) - Floodside
                 .00     -2.00
              141.00     -2.00
              155.00     -2.00

         2    1 Layer 3 (CH) - Landside
              157.00     -2.00
              375.00     -2.00

         3    2 Compacted Fill - FS
              141.00     -2.00
              145.50      -.50

         4    2 Compacted Fill - LS
              158.50      1.00
              167.00      1.00
              176.00     -2.00

         5    3 T-Wall
              145.50     -5.00
              145.50     -2.50
              155.00     -2.50
              155.00     -2.00
              155.00     12.30
              157.00     12.30
              157.00      1.00
              157.00     -2.00
              157.00     -2.50
              158.50     -2.50
              158.50     -5.00

         6    1 Layer 3 (CH) - Under Wall
              145.50     -5.00
              158.50     -5.00

         7    4 Layer 4 (CH)
                 .00    -14.00
              375.00    -14.00

         8    5 Layer 5 (ML)
                 .00    -23.00
              375.00    -23.00

         9    6 Layer 6 (CH)
                 .00    -26.00
              375.00    -26.00

        10    7 Layer 7 (CH)
                 .00    -31.00
```

```
            375.00    -31.00

      11    8 Layer 8 (CH)
               .00    -39.00
            375.00    -39.00

      12    9 Layer 9 (CH)
               .00    -65.00
            375.00    -65.00

      13   10 Compacted Fill - Above T Wall Base  FS
            145.50      -.50
            150.00      1.00
            155.00      1.00

      14   10 Compacted Fill - Above T Wall Base  LS
            157.00      1.00
            158.50      1.00


MATERIAL PROPERTIES
     1 Layer 3 (CH)
          80.00 Unit Weight
          Conventional Shear
              120.00       .00
          No Pore Pressure
     2 Compacted Fill
          110.00 Unit Weight
          Conventional Shear
              500.00       .00
          No Pore Pressure
     3 T Wall
          .00 Unit Weight
          Very Strong
     4 Layer 4 (CH)
          100.00 Unit Weight
          Conventional Shear
              120.00       .00
          No Pore Pressure
     5 Layer 5 (ML)
          117.00 Unit Weight
          Conventional Shear
              200.00     15.00
          Piezometric Line
          1
     6 Layer 6 (CH)
          100.00 Unit Weight
          Conventional Shear
              200.00       .00
          No Pore Pressure
     7 Layer 7 (CH)
          100.00 Unit Weight
          Linear Increase
              217.00      8.10
          No Pore Pressure
     8 Layer 8 (CH)
          100.00 Unit Weight
```

```
          Linear Increase
              374.00      8.30
          No Pore Pressure
     9 Layer 9 (CH)
          100.00 Unit Weight
          Linear Increase
              590.00      8.00
          No Pore Pressure
     10 Compacted Fill - Above T-Wall Base
          .00 Unit Weight
          Conventional Shear
                 .00       .00
          No Pore Pressure

PIEZOMETRIC LINES
         1     62.40 Water Level
                 .00     10.00
               145.50     10.00
               145.51     -1.00
               157.00     -1.00
               375.00     -1.00

         2     62.40 Piezometeric levels in ML
                 .00     10.00
               149.50     10.00
               156.00     10.00
               158.50      1.00
               167.00      1.00
               173.00     -1.00
               375.00     -1.00


DISTRIBUTED LOADS
      1
REINFORCEMENT LINES
               1        .00        2
118.083     -91.0 4380  848.
147.000     -4.25   4380      848

               2        .00        2
152.000     -4.25 -9300   464
180.917     -91.0 -9300   464

               3        .00        2
157.000     -4.25  4900   496
185.917     -91.0  4900   496

               4        .00        1
149.000     -4.25     0.   0.
149.000     -41.0     0.   0.


ANALYSIS/COMPUTATION
     Circular
         145.5     25        48
SINgle-stage Computations
RIGht Face of Slope
```

```
LONg-form output
SORt radii
CRItical
PROcedure for computation of Factor of Safety
SPENCER

GRAPH
COMPUTE
```

Design Example #2

A cross section of the wall section used for Example 2 is shown below. The water level used in this example is elevation 18.0 and the design situation is assumed to be a top of wall load case. The wall geometry including the wall dimensions and the pile layout is presented in Figure 1. The spacing of the piles in the out of plane direction is 5-ft. The piles tips extend to Elevation -110 ft. The soil profile and shear strengths for the foundation are shown in Figure 2.

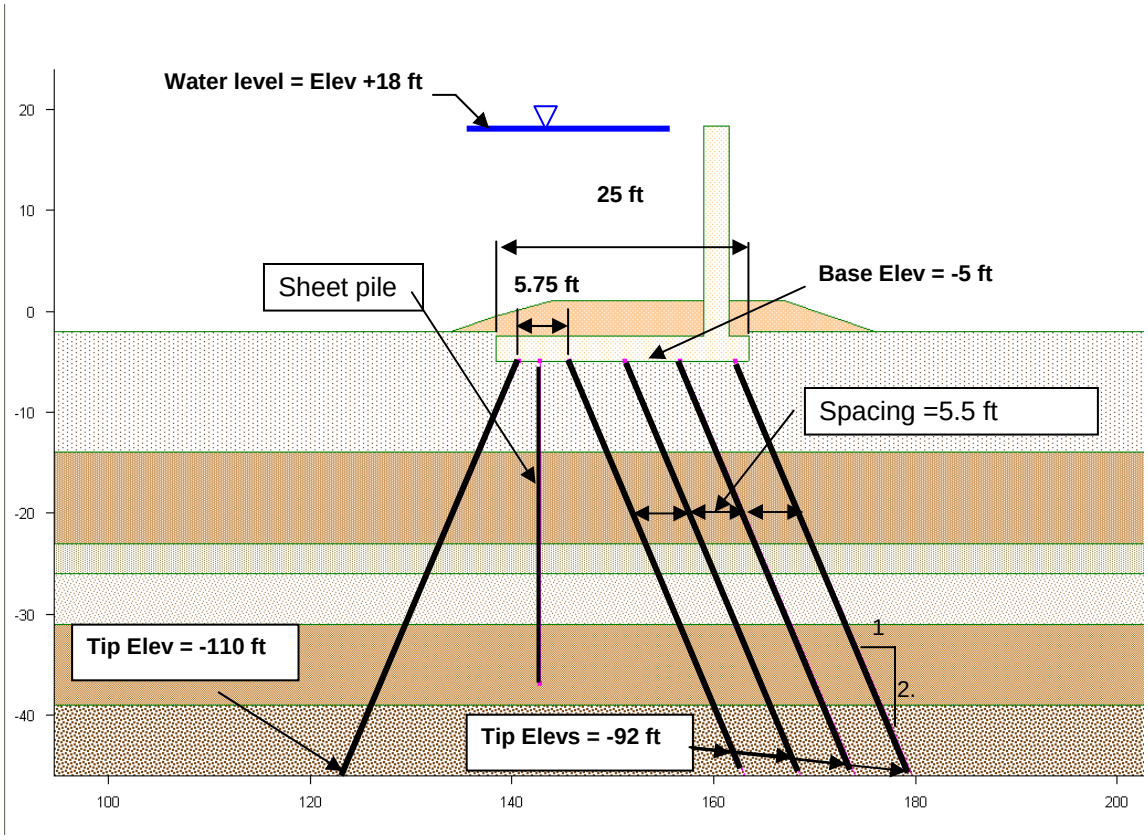

Cross-sectional view of pile layout

Figure 1. Wall Geometry.

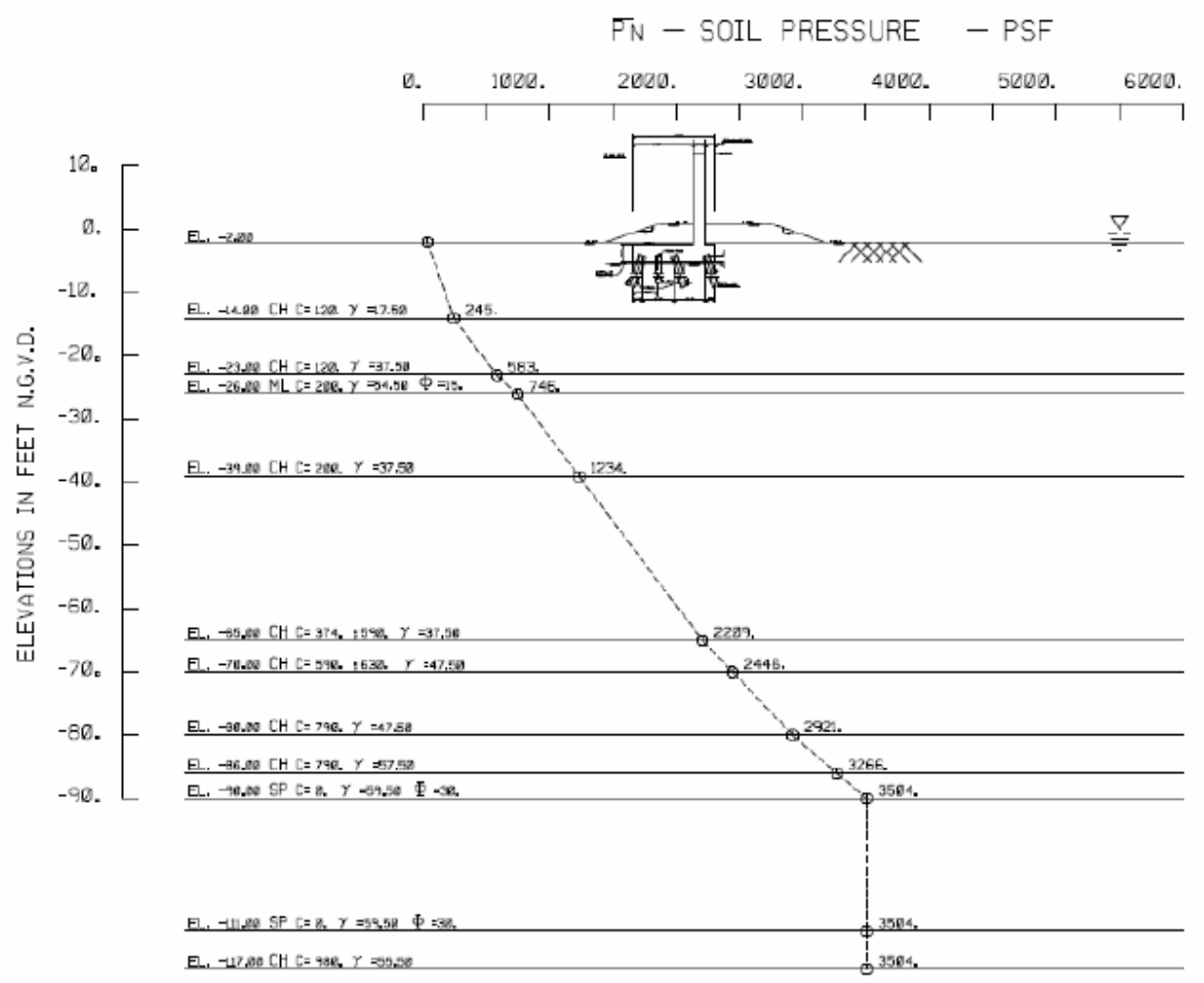

Figure 2. Soil Profile.

Step 1 Initial Slope Stability Analysis

Perform a Spencer's method slope stability analysis to determine the critical slip surface with the water load only on the ground surface and no piles. The required factor of safety according to the Hurricane and Storm Damage Reduction System Design Guidelines for the top of wall load condition is 1.4. For the design example, the critical failure surface is shown in Figure 1 where the factor of safety is 0.529. Because this value is less than the required value of 1.4, the T-Wall will need to carry an unbalanced load in addition to any loads on the structure.

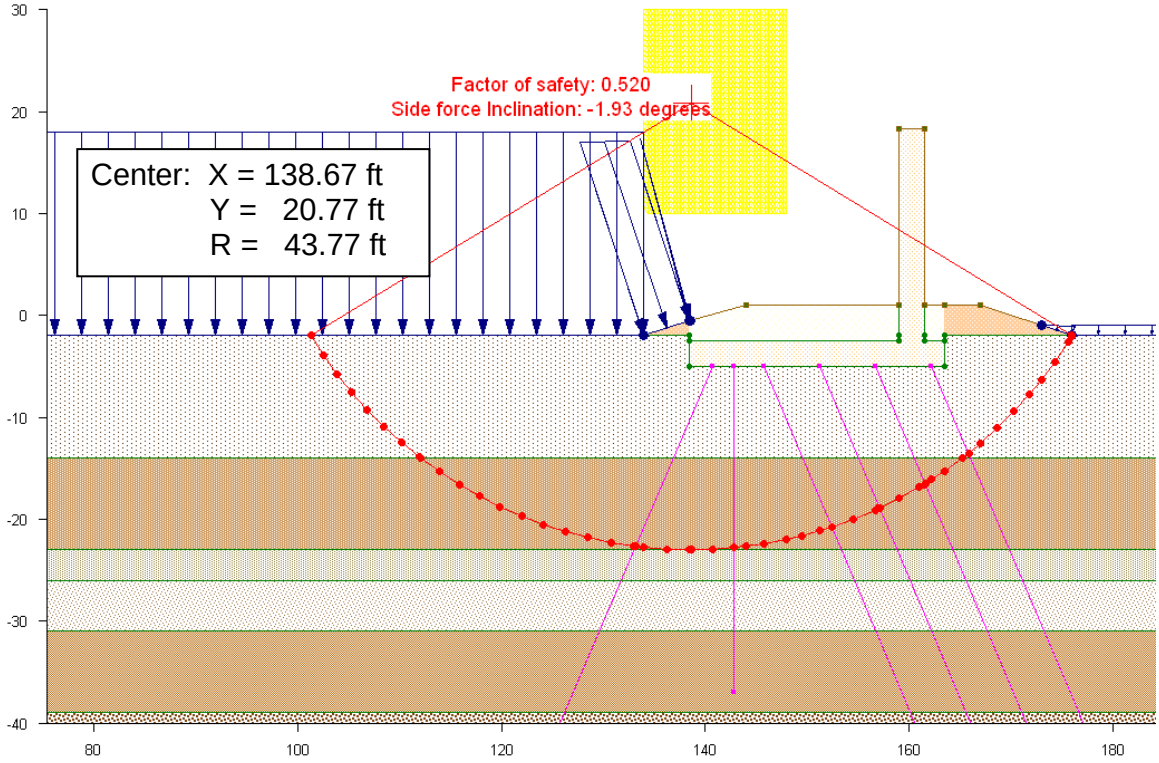

Figure 3. Spencer's analysis of the T-Wall without piles.

Step 2 Unbalanced Force Computations

Step 2 involves the determination of the (unbalanced) forces needed to provide the required global stability factor of safety. The base of the T-Wall is at elevation -5 ft. The critical failure surface extends down to elevation -23' in this example. The ground surface above the heel of the T-wall is at Elevation – 0.5 ft. In the design procedure, the unbalanced load is assumed to act halfway between these two elevations and at the x-coordinate of the heel of the T-wall. Thus, a horizontal line load is applied at elevation -11.75 ft at the x-coordinate along a vertical line passing through the heel of the T-wall. A trial and error process showed that an unbalanced force of 17480 lb/ft would result in a factor of safety of 1.4 as shown in Figure 2.

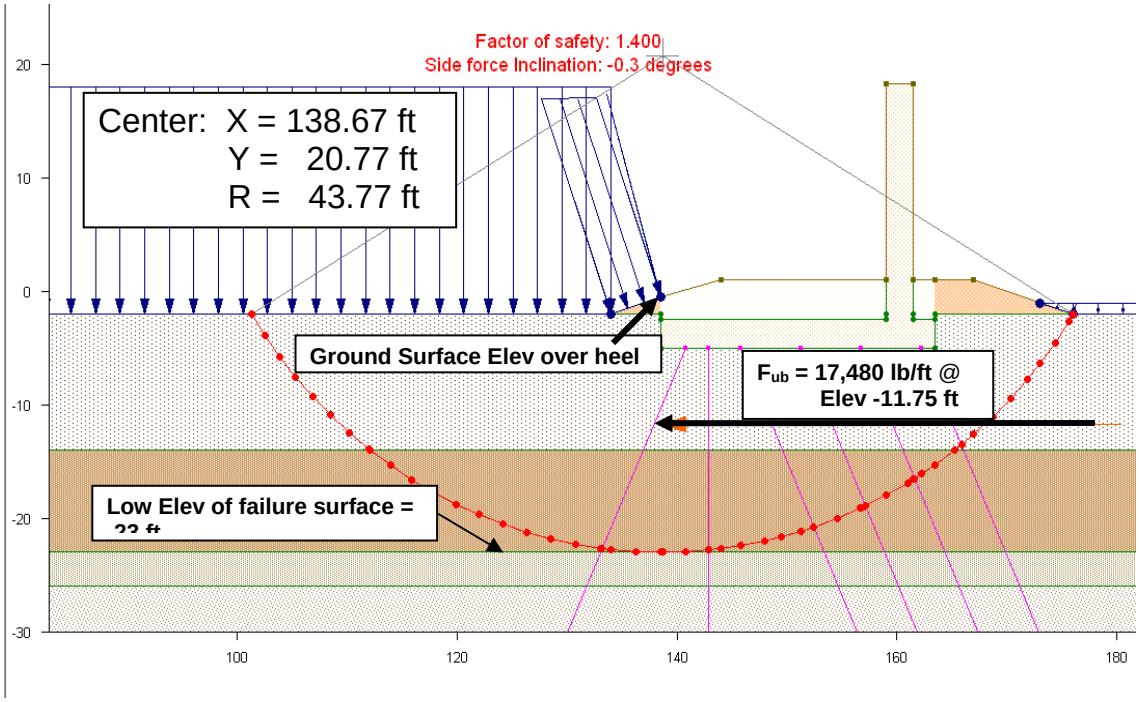

Figure 4. Spencer's analysis of the T-Wall with an unbalanced load to increase global stability.

It should be noted that unbalanced load was determined from a fixed grid search.for the critical as shown in Figure 2. Step 2 provides that if the pile foundation of the T-Wall can safely carry the unbalanced load on the structure, the global stability will meet the required factor of safety. The UTexas4 input files for Figures 1 and 2 are attached at the end of this example.

Step 3 Allowable Pile Capacity Analysis

3.1 For the preliminary analysis, allowable pile capacities determined by engineers in New Orleans District for the original design of this project are shown in Figure 3 for ultimate loads vs. depth. Since this is a top of wall load case, a 50% over stress is allowed according to the Hurricane and Storm Protection System Design Guidelines. For the case with load test data, the net factor would be 2.0/1.5 = 1.333. For the case with calculated capacities, the allowable load factor would be 3.0/1.5 = 2.0.

The allowable loads for compression pile can be determined using the chart on Figure 5 which plots pile load test results. This test was performed with casing above the critical failure surface to preclude contribution of skin friction above that point. The tip elevation of the piles is equal to Elevation -92.5 ft. where the ultimate load is 74 tons.

Allowable Compressive load = (74 tons x 2 kips/ton/ 2) x 1.5

= 111 kips

In the preceding calculation and in accordance with the Hurricane and Storm Protection Guidelines, the factor of safety was equal to 2 because the allowable capacity was determined from load tests and the 50% overstress is permitted as well.

The allowable tension load was determined from prior calculations provided by MVN that are shown in the lower panel of Figure 6. For a tip Elevation of -110-ft, the ultimate capacity is 120 tons. The capacity at elevation -23 is about 7 tons. Therefore, the tension capacity can be estimated as 120-7 = 113 tons. From this, the allowable capacity is determined as follows:

Allowable Tensile Load = (113 tons x 2 kips/ton/3) x 1.5

= 113 kips

In this calculation and in accordance with the Hurricane and Storm Protection Guidelines, the factor of safety was equal to 3 because the allowable capacity was determined by calculations based on the skin friction between the soil and the pile and the pile length.. The 50 % overstress factor was set to 1.5.

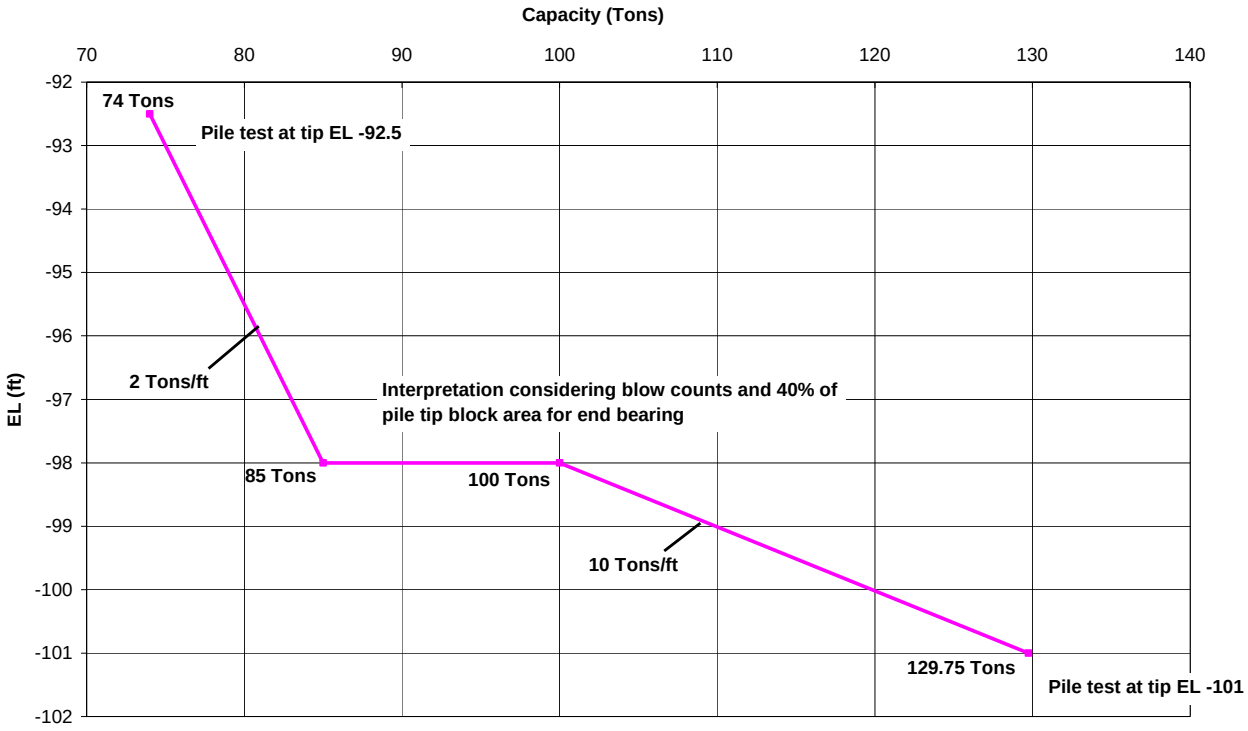

Figure 5. Pile Load Test Data

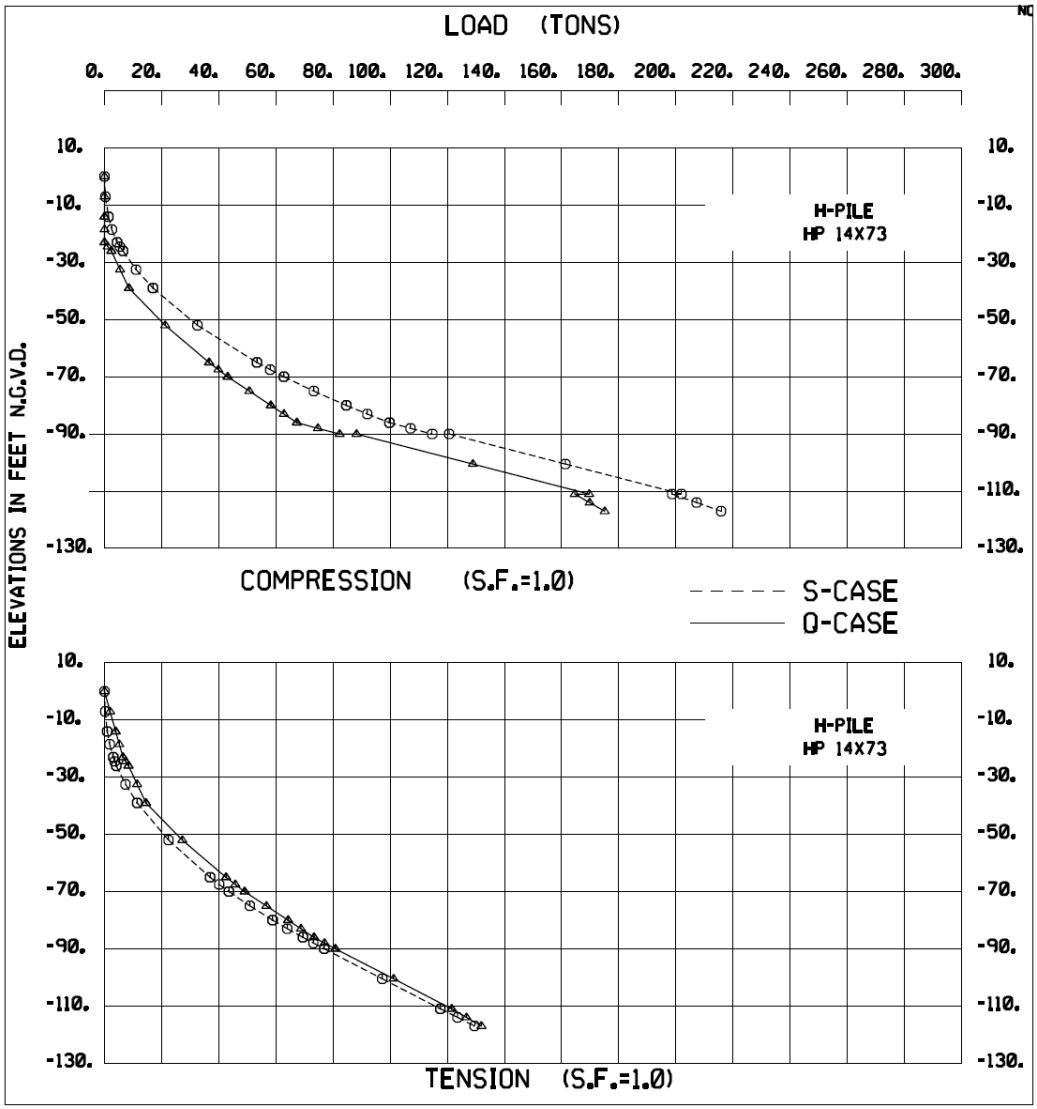

Figure 6. Ultimate Axial Capacity with Depth, Calculated

3.2 The allowable shear load is determined from pile head deflection versus lateral load plot on Figure 7 computed using the ENSOFT program LPILE. The ultimate load was determined to be 24.5 kips. The allowable load is determined to be 8.2 kips after dividing by the factor of safety of 3.0. However, the allowable load can be increased by 50% due to the 50% overstress allowed for the top of wall condition provided by the Hurricane and Storm Protection Guidelines. Thus, the allowable shear computed as follows:

Allowable pile shear = (24.5 kips / 3) x 1.5 = 12.25 kips

A summary of the allowable loads for the piles extending to Elevation -110 ft is presented in Table 1 below.

Table 1. Allowable Pile Capacities for Design Example 2 for Piles Extending to Elevation -110 ft	
Load Type	Allowable Load (kips)
Axial Compressive Load	194.6
Axial Tensile Load	120
Shear	12.25

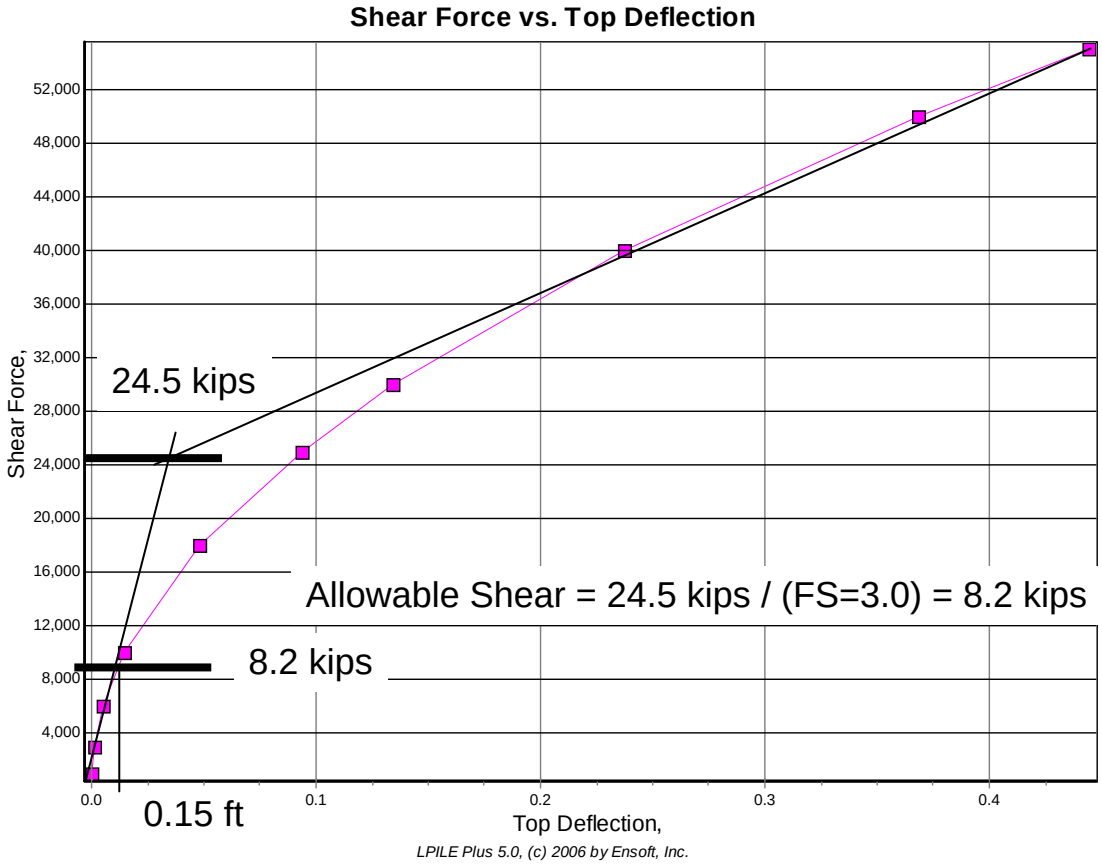

Figure 7. LPILE analysis of Pile head deflection vs shear force at critical surface to determine allowable shear force in piles.

Step 4 Initial T-wall and Pile Design

4.1 Use CPGA to analyze all load cases and perform a preliminary pile and T-wall design. The unbalanced force is converted to an "equivalent" force applied to the bottom of the T-wall, $F_{cap,}$ as calculated as shown below (See Figure 8):

$$F_{cap} = F_{ub}\left[\frac{\left(\frac{L_u}{2}+R\right)}{\left(L_p+R\right)}\right]$$

Where:

F_{ub} = unbalanced force computed in step 2.
L_u = distance from top of ground to lowest el. of critical failure surface (in)
L_p = distance from bottom of footing to lowest el. of crit. failure surface (in)

$$R = \sqrt[4]{\frac{EI}{Es}}$$

E = Modulus of Elasticity of Pile (lb/in^2)
I = Moment of Inertia of Pile (in^4)
Es = Modulus of Subgrade Reaction (lb/in^2) below critical failure surface. In New Orleans District this equates to the values listed as K_HB.

For the solution:
Piles = HP 14x73. I = 729 in^4, E = 29,000,000 psi

Soils – Importance of lateral resistance decreases rapidly with depth, therefore only first three layers are input – with the third assumed to continue to the bottom of the pile. The parameters were developed from soil borings from the New Orleans District and are as shown in Figure 9.

Silt, ϕ = 15, C = 200 psf, γ_{sat} = 117 pcf, K_HB ave. = k =167 psi
Clay 1, ϕ = 0 , C = 200 psf, γ_{sat} = 100 pcf, K_HB = k = 88.8 psi
Clay 2, ϕ = 0 , C = 374 psf, γ_{sat} = 100 pcf, K_HB = k = 165.06 psi

The top layer of silt under the critical failure surface is stiffer but only three feet thick. Will use a k = 100 psi.

R therefore is equal to 120 in = 10 feet

P_{cap} = 17,480 * (22.5/2 + 10) / (18 + 10) = 13,266 lb/ft

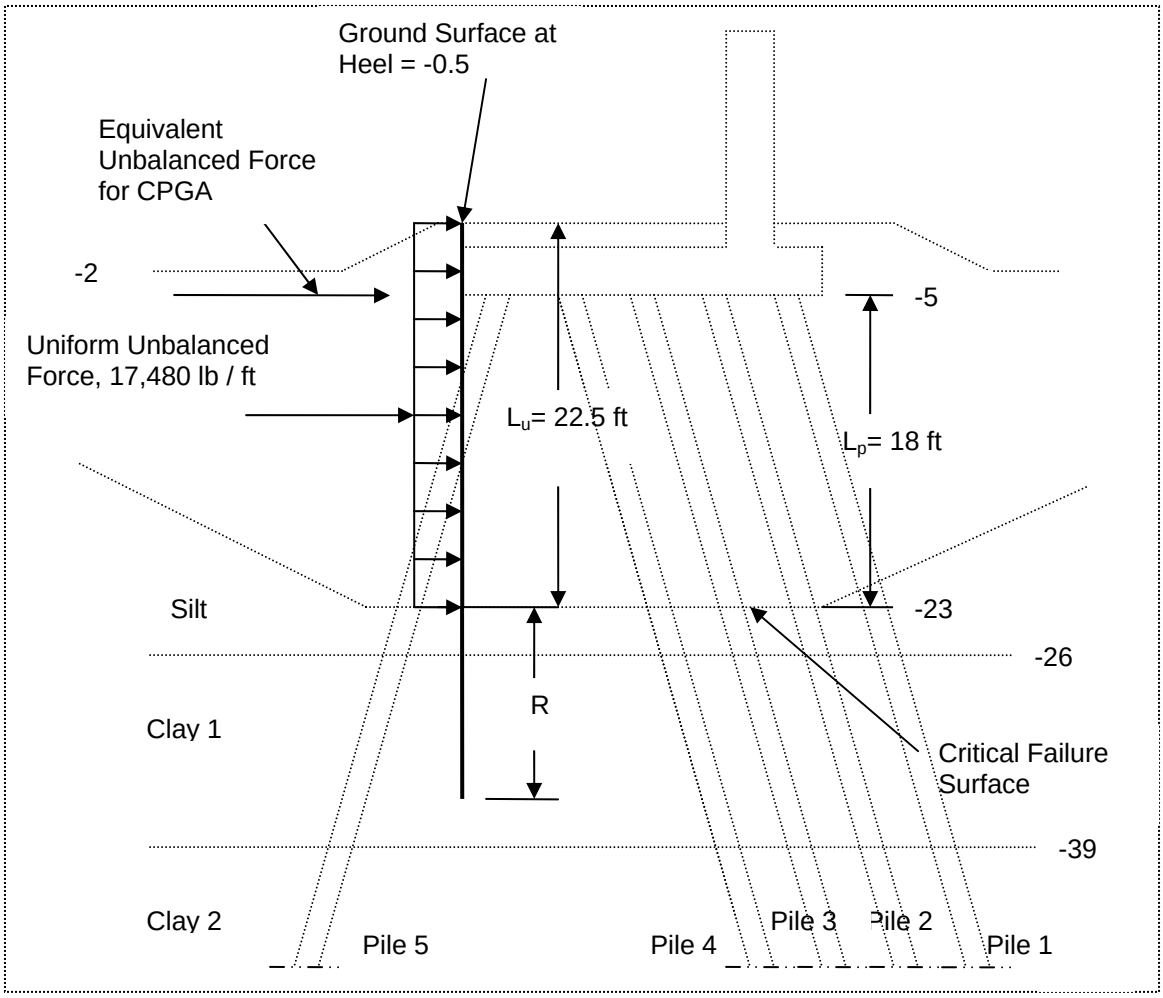

Figure 8. Equivalent Force Computation for Preliminary Design With CPGA

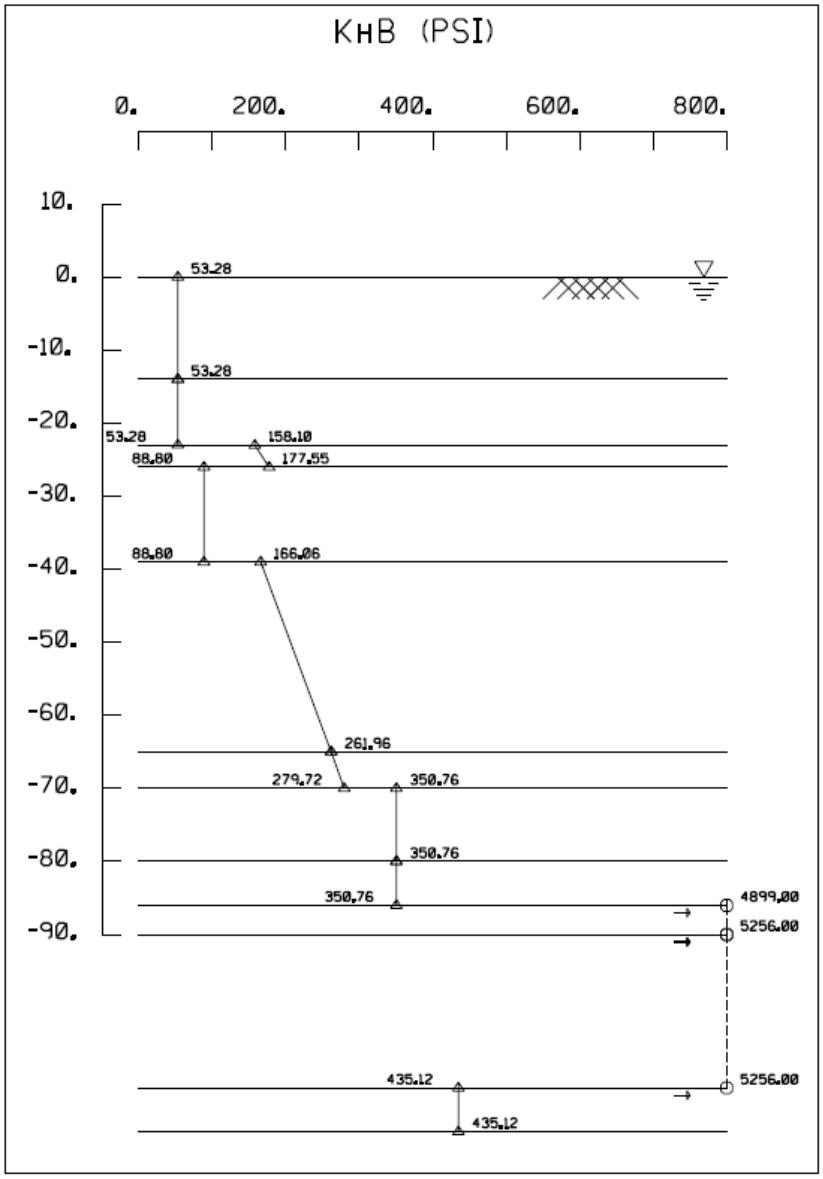

Figure 9. Soil Stiffness with Depth

4.2 This unbalanced force is then analyzed with appropriate load cases in CPGA. Generally 8 to 20 load cases may be analyzed depending on expected load conditions. For this example, only the water at top of wall case is analyzed but both pervious and impervious foundation conditions are evaluated. See the spreadsheet calculations in Attachment 3 for the computation of the input for CPGA. The model is a 5 foot strip of the pile foundation.

For the CPGA analysis, the soil modulus, Es is input at a very low value, 0.00001 psi, because the factor of safety is less than 1.0.

The CPGA output is shown in Attachment 4. A summary of results for the two load conditions analyzed are shown below:

LOAD CASE - 1

PILE	F1 K	F2 K	F3 K	M1 IN-K	M2 IN-K	M3 IN-K	ALF	CBF
1	.0	.0	6.8	.0	-4.0	.0	.06	.02
2	.0	.0	47.2	.0	-3.8	.0	.42	.15
3	.0	.0	87.6	.0	-3.7	.0	.79	.28
4	.0	.0	127.9	.0	-3.5	.0	1.15	.41
5	.0	.0	-125.0	.0	3.5	.0	1.11	.40

LOAD CASE - 2

PILE	F1 K	F2 K	F3 K	M1 IN-K	M2 IN-K	M3 IN-K	ALF	CBF
1	.0	.0	22.3	.0	-3.4	.0	.20	.07
2	.0	.0	56.9	.0	-3.3	.0	.51	.18
3	.0	.0	91.4	.0	-3.2	.0	.82	.29
4	.0	.0	126.0	.0	-3.0	.0	1.14	.40
5	.0	.0	-97.8	.0	3.1	.0	.87	.31

Where:
F1 = Shear in pile at pile cap perpendicular to wall
F2 = Shear in Pile at Pile Cap parallel to wall
F3 = Axial Load in Pile
M1 = Maximum moment in pile perpendicular to wall
M2 = Maximum moment in pile parallel to wall
M3 = Torsion in pile
ALF= Axial load factor – computed axial load divided by allowable load
CBF= Combined Bending factor – combined computed axial and bending forces relative to allowable forces

From the CPGA analysis, axial loads in the piles are somewhat over the allowable values. Still they are close to being OK, and knowing that the initial design using CPGA is conservative compared to the more exact Group 7 analysis, this configuration will be carried forward into the Group 7 analysis.

Computed deflections from the CPGA analysis are shown below:

PILE CAP DISPLACEMENTS

LOAD CASE	DX IN	DZ IN	R RAD
1	-.7899E+00	-.3207E+00	-.1201E-02
2	-.6897E+00	-.2476E+00	-.1028E-02

These deflections are less than the allowable vertical deflection (DZ) of 0.5 inches X an overstress factor of 1.5 = 0.75" and the allowable horizontal deflection (DX) of 0.75 inches X an allowable overstress factor of 1.5 = 1.125 inches from the Hurricane and Storm Damage Reduction Design Guidelines.

4.4 Sheet pile design. Seepage design of the sheet pile is not performed for this example.

4.5 Check for resistance against flow through. Since the pile spacing is uniform, we will analyze one row of piles parallel with the loading rather than the entire monolith.

a. Compute the resistance of the flood side row of piles.

$$\sum P_{all} = \frac{n \sum P_{ult}}{1.5}$$

Where:

n = number of piles in the row within a monolith. Or, for monoliths with uniformly spaced pile rows, n = 1. Use 1 for this example

$P_{ult} = \beta(9 S_u b)$

S_u = soil shear strength

b = pile width = 14"

β = group reduction factor pile spacing parallel to the load - since the piles batter opposite to each other, there group affects are not computed.

For the soils under the slab, S_u = 120 psf

Therefore: P_{ult} = 9(120 psf)(14 in/12 in/ft) = 1,260 lb/ft

ΣP_{ult} = summation of P_{ult} over the height L_p, as defined in paragraph 4.1

For single layer soil is P_{ult} multiplied by L_p (18 ft) - That is the condition here since the shear strength is constant from the base to the critical failure surface.

ΣP_{ult} = 1,260 lb/ft (18 ft) = 22,680 lb

ΣP_{all} = 1(22,680 lb)/1.5 = 15,120 lb

b. Compute the load acting on the piles below the pile cap.

$$F_{up} = w f_{ub} L_p$$

Where:

w = Monolith width. Since we are looking at one row of piles in this example, w = the pile spacing perpendicular to the unbalanced force (s_t) = 5 ft.

$$f_{ub} = \frac{F_{ub}}{L_u}$$

F_{ub} = Total unbalanced force per foot from Step 2 = 17,480 lb/ft
L_u = 22.5 ft
L_p = 18 ft

f_{ub} = 17,480 lb/ft / 22.5 ft = 777 lb/ft/ft

F_p = 5 ft(777lb/ft/ft)(18ft) = 69,930lb

c. Check the capacity of the piles 50% of F_p = 69,930 lb(0.50) = 34,965 lb

The capacity ΣP_{all} = 15,120 lb < 34,965 lb so the flood side row of piles is not adequate and the capacity of the rest of the pile rows must be added. The capacity ΣP_{all} is the same as computed for the flood side row of piles except as modified by the group reduction factor. Since the batter of the flood side and next row of piles is opposite, the flood side pile can be considered as single pile and the next row of piles as a lead row of piles. The next rows of piles would be trailing piles. The row spacing is 5'6".

Using a row spacing of 5'6", the group reduction factor (β) for the lead piles is

$$\beta = 0.7(s/b)^{0.26} \text{ ; or } = 1.0 \text{ for } s/b > 4.0 \qquad (5)$$

Where:
s = spacing between piles parallel to loading

For s = 5'6" and b=14" for HP14x73 piles, s/b = 4.71
Since s/b = 4.71 < 4.0, β = 1.0 for the lead pile

For trailing piles, the reduction factor, β, is:

$$\beta = 0.48(s/b)^{0.38} \text{ ; or } = 1.0 \text{ for } s/b > 7.0 \qquad (6)$$

$$\beta = 0.48(4.71)^{0.38} = 0.87$$

Shortcutting the math in the equations presented in the previous page, for the trailing piles, ΣP_{all} = β ΣP_{all} = 0.87 * 15,120 = 13,154 lb

Summing ΣP_{all} for all 5 pile rows , the total allowable unbalanced force is:

15,120 + 15,120 + 13,154 + 13,154 + 13,154 = 69,702 lb

Since F_p = 69,930 lb, the difference is 228 lb, or about 0.3%. For the purposes of this example, this is considered close enough.

4.6 Second flow through check. Compute the ability of the soil to resist shear failure between the pile rows from the unbalanced force below the base of the T-wall, $f_{ub}L_p$, using the following equation:

$$f_{ub}L_p \le \frac{A_p S_u}{FS}\left[\frac{2}{(s_t - b)}\right]$$

Where:

A_pS_u = The area bounded by the bottom of the T-wall base, the critical failure surface, the upstream pile row and the downstream pile row multiplied by the shear strength of the soil within that area. – See Figure 10. S_u =120 psf

A_pS_u = (18(22.5+36.5)/2)(120 psf) = 64,152 lb

FS = Target factor of safety used in Steps 1 and 2. – 1.5

s_t= the spacing of the piles transverse (perpendicular) to the unbalanced force 5 ft

b = pile width – 14 inches

$f_{pb}L_p$ = (777 lb/ft)(18 ft) = 13,986 lb

$$\frac{A_p S_u}{FS}\left[\frac{2}{(s_t - b)}\right] = \frac{64{,}152}{1.5}\left[\frac{2}{5 - \left(\frac{14}{12}\right)}\right] = 22{,}314 \text{ lb}$$

Therefore, capacity against flow through is OK

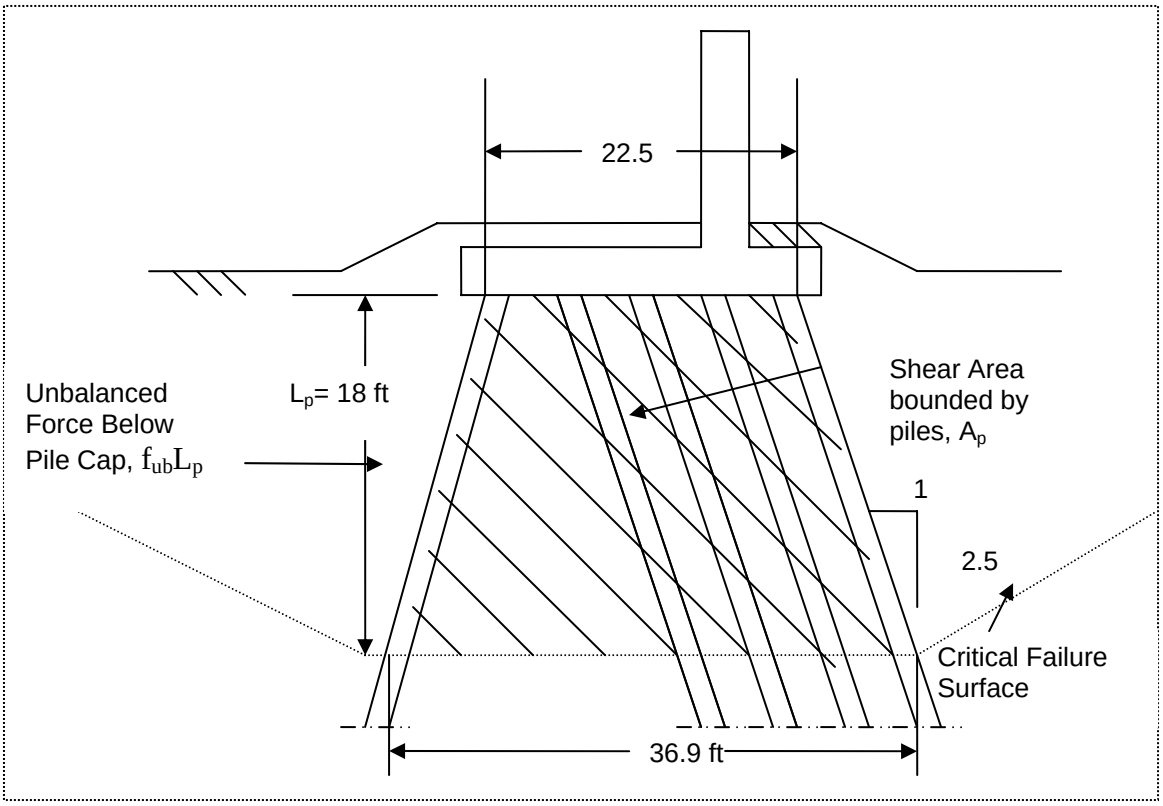

Figure 10. Shear Area for Flow-through Check

Step 5 Pile Group Analysis

5.1 A Group 7 analysis is performed using all loads applied to the T-wall structure. Critical load cases from step 4 would be used. In this example, only one load case with two foundation conditions is shown.

5.2 The loads applied in the Group 7 model include the distributed loads representing the unbalanced force that acts directly on the piles and also the water loads and self-weight of the wall that acts directly on the structure. In Group 7 these loads are resultant horizontal and vertical forces and the moments per width of spacing that act on the T-wall base (pile cap). They also include the unbalance force from the base of the cap to the top of soil, converted to a force and moment at the base of the structure. These forces are calculated using a worksheet or Excel spreadsheet and are shown at then end of the spreadsheets shown in Attachment 3. For this analysis the resultant forces per 5-ft of pile spacing were:

Pervious Foundation Condition

Vertical force	=	134,114 lb
Horizontal force	=	97,636 lb
Moment	=	7,347,343 in-lbs

Impervious Foundation Condition

Vertical force	=	184,583 lb
Horizontal force	=	97,636 lb
Moment	=	15,636,093 in-lbs

5.3 The unbalanced load below the bottom of the footing is applied directly as distributed loads on the pile. Check if ($n\Sigma P_{ult}$) of the flood side pile row is greater than 50% F_p, (from 4.5)

.

$(n\Sigma P_{ult}) = 1\ (22{,}680) = 22{,}680$ lb

50% F_p = 34,965 lb

Since $n\Sigma P_{ult} < 50\%\ F_p$,distribute P_{ult} onto the flood side (left) row of piles.

P_{ult} = 1,260 p/ft = 105 lb/in

The remainder of F_p is divided among the remaining piles = 69,930 – 22,680 = 47,250 lb

This is distributed onto each pile according to a ratio of the group factors shown in table 2 (pile numbers as shown in figure 6) as computed in step 4.5. Since the load will be applied to the piles in Group 7 as a distributed load in lb/in, First, the total load will be divided into the load applied to one vertical inch

= 47,250 lb / (18ft /12in/ft) = 218.8 lb/in.

The sum of the distribution factors is 0.87+0.87+0.87+1.0 = 3.61.

The force on the trailing piles is 218.8 lb/in * 0.87/3.61 = 52.7 lb/in
The force on the leading pile is 218.8 lb/in * 1.0/3.61 = 60.6 lb/in

Table 2. Pile Reduction Factors and Ultimate Distributed Loads for each Pile				
Pile	(s/b)	Pile type	β	Load, lb/in
1	4.71	Trailing	0.87	52.7
2	4.71	Trailing	0.87	52.7
3	4.71	Trailing	0.87	52.7
4	4.71	Lead	1.0	60.6
5	4.71	Single	1.0	105

5.4 Thus, all the loads including the pile cap loads and the distributed loads are identified and and a Group 7 analysis is performed using all the loads applied to the T-wall system. The group 7 model is shown in Figure 11.

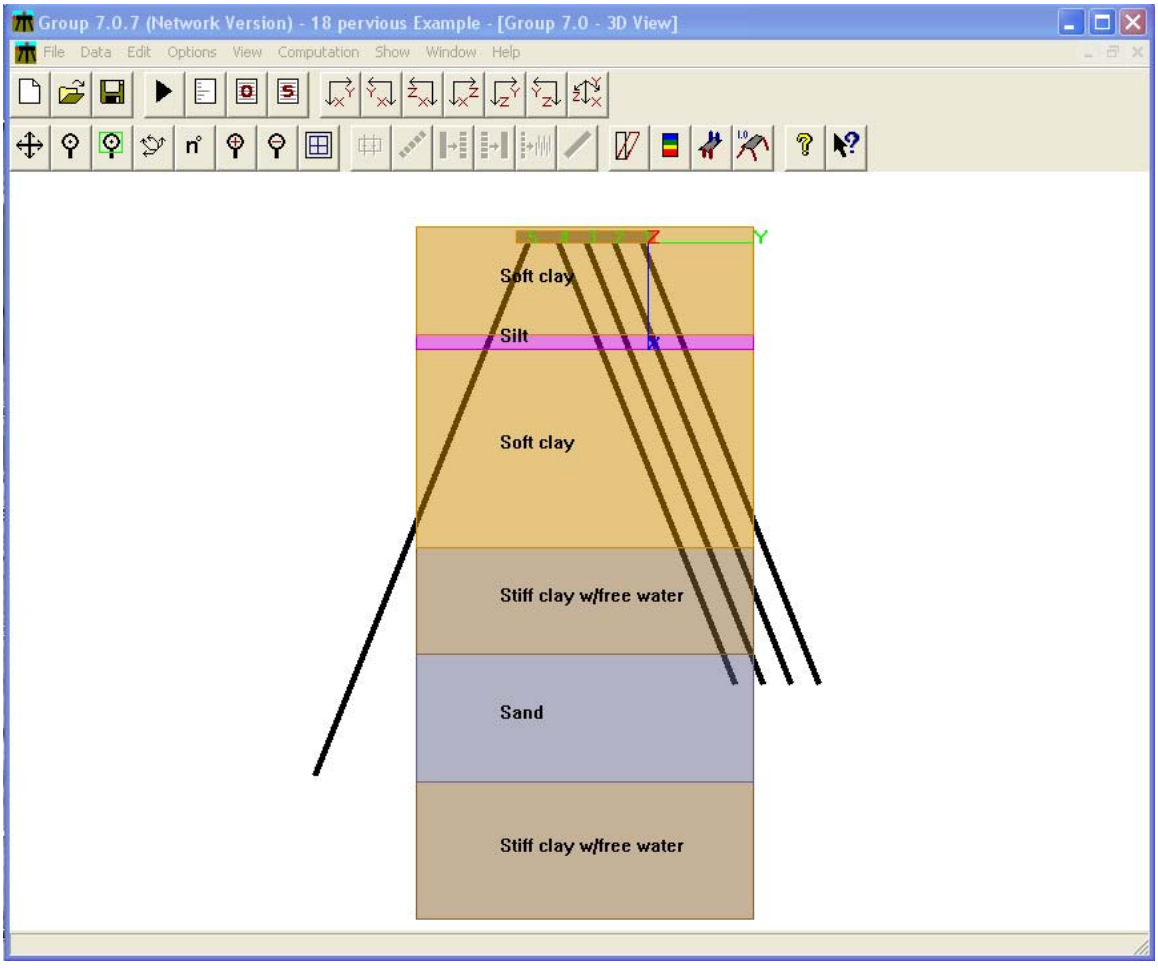

Figure 11. Group 7 Model

5.2 Since the factor of safety without piles was less than one, the lateral stiffness of the soil from the bottom of the pile cap to the top of the critical failure surface at -23 feet will be set to zero by using very small numbers for the ultimate shear strength of the soil. The lateral soil reaction against the pile (not including the applied soil loads) is shown in Figure 12

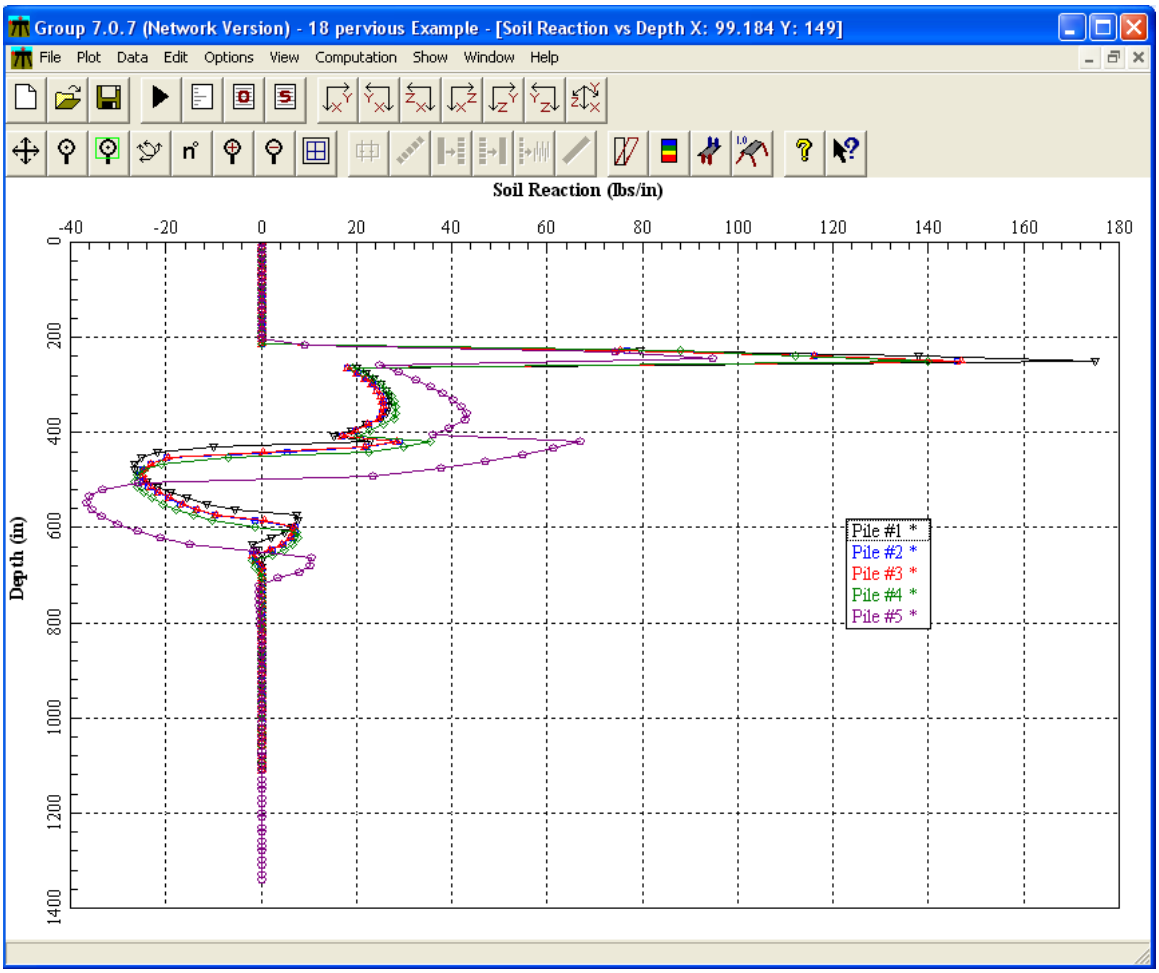

Figure 12 Soil Reaction on Piles with Depth

The pile responses to the applied loads are the sought after information from the Group 7 analysis to determine if the design requirements are achieved for a given pile layout. An illustration of the moment in the piles versus depth for this iteration shown in Figure 13 for the pervious sheet pile condition. An illustration of the shear is shown in Figure 14.

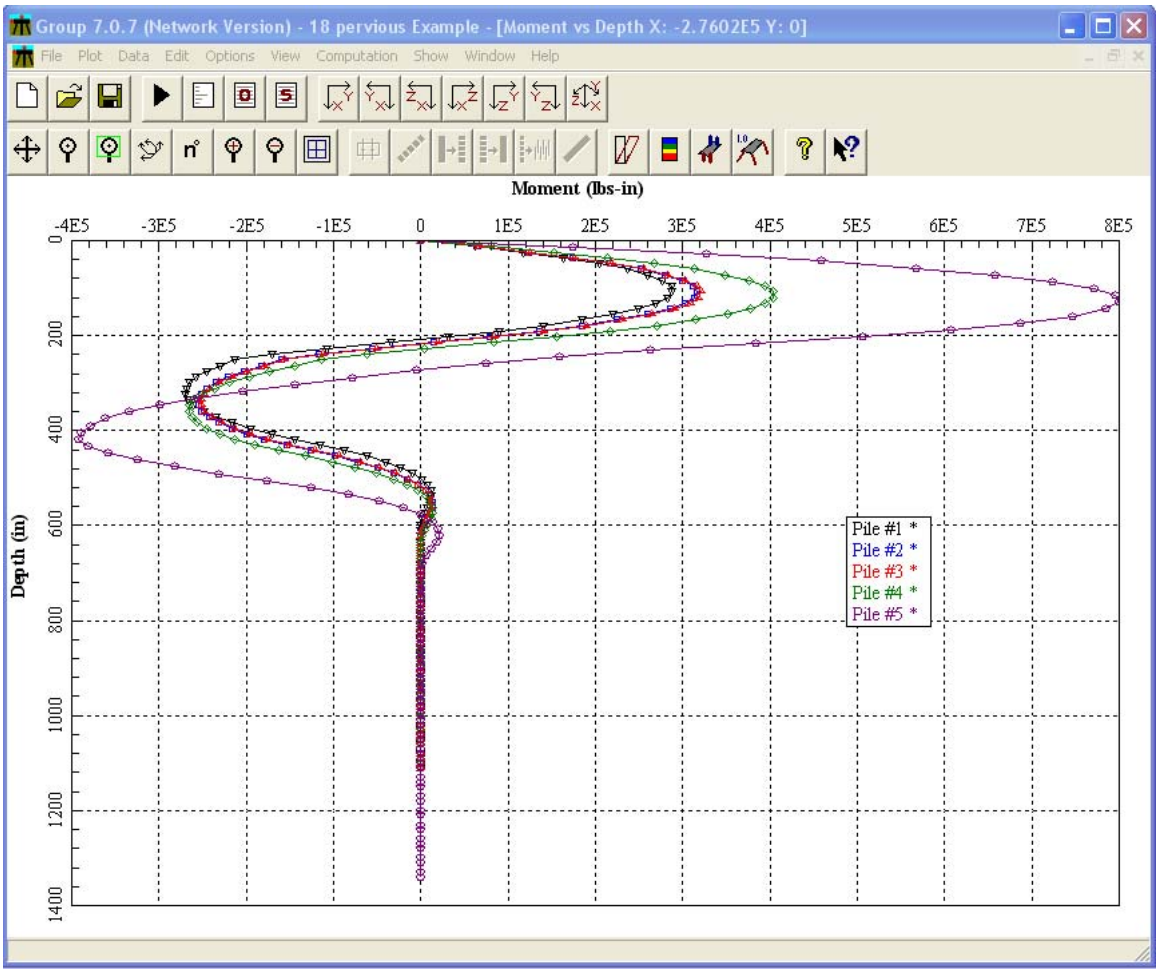

Figure 13 Moment in Piles With Depth

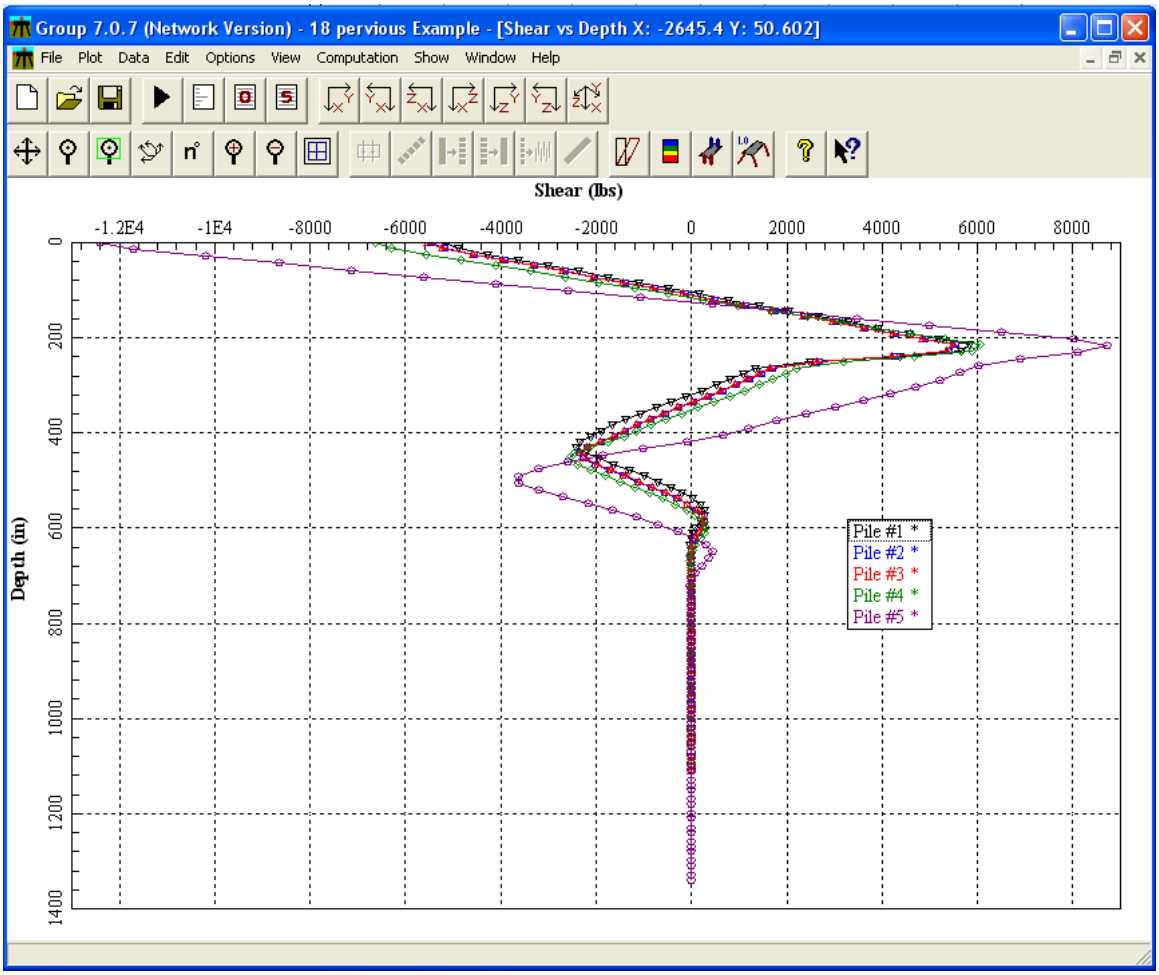

Figure 14. Shear diagrams for each of the four piles.

Grouped displacements of the pile cap from the Group 7 analysis are listed in Table 4.

Table 4. Grouped Pile Foundation displacements from Group 7 analysis

	Vert. Displacement, Inches	Hor. Displacement, Inches	Rotation Radians
Pervious	-0.2120	0.5254	0.0008644
Impervious	-0.1549	0.4424	0.0007479

These deflections are less than the allowable vertical deflection (DZ) of 0.5 inches and only slightly greater than the allowable horizontal deflection (DX) of 0.75 inches from the Hurricane and Storm Damage Reduction Design Guidelines, even with out increases allowed for the top of wall load case. Figure 13 below shows displacement with depth.

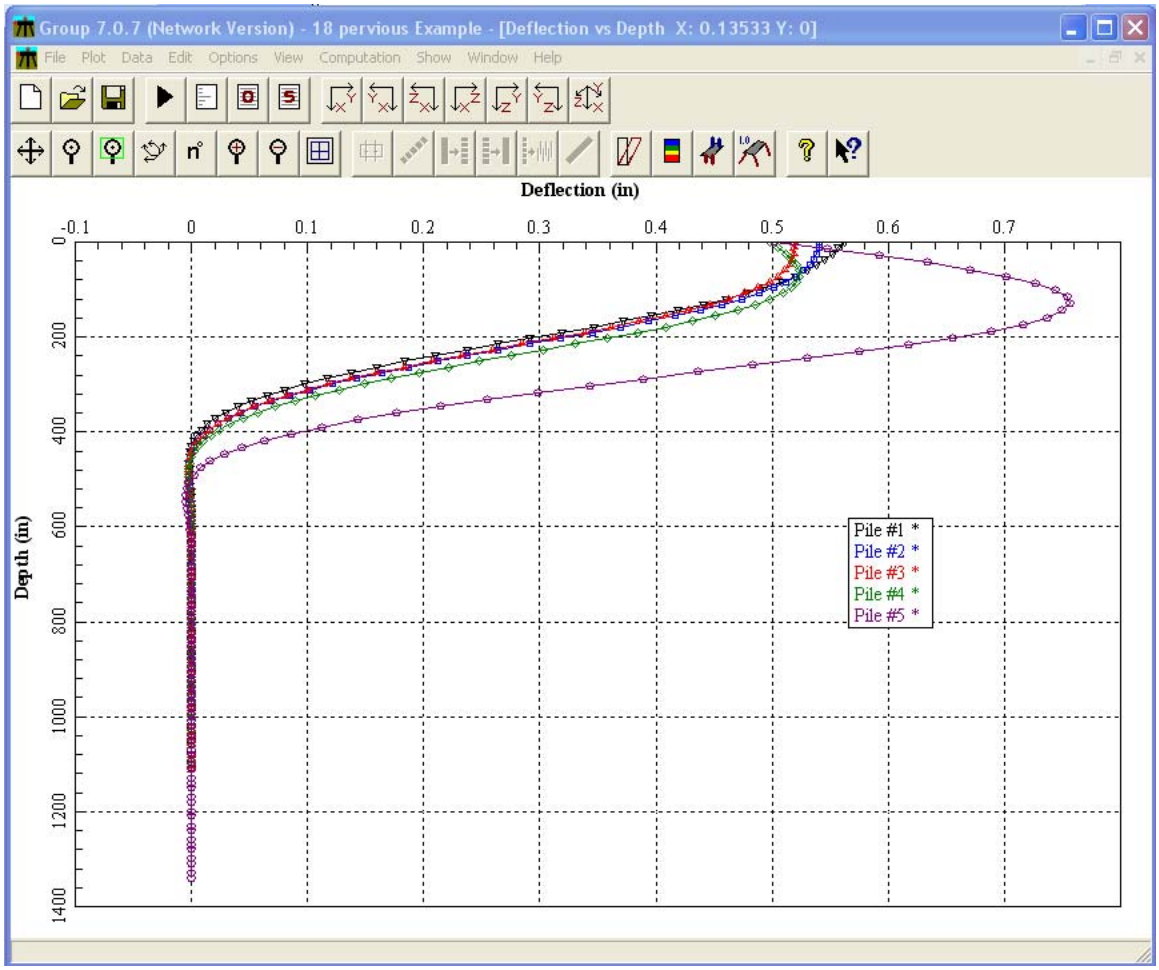

Figure 15. Deflection with Depth for the Pervious Foundation Condition.

5.3 Specifically, the deflections, axial loads and shear and bending moments in the piles are what must be evaluated to determine if the design requirements are met. The results of the Group 7 analysis are reported where the pile responses for the full loading conditions on T-wall systems are listed are listed in Table 5.

Table 5. Axial, shear and moments in piles computed by Group 7 for full loading conditions that include distributed loads applied directly to piles and resultant horizontal, vertical and moments due to water loads.

Pervious Case				
Pile Number	Pile Location	Axial (kips)	Shear (kips)	Maximum Moment In-kips
1	Right	8.21 (C)	5.82	288
2	Right-center	49.7 (C)	5.54	321
3	Center	80.8 (C)	5.49	473
4	Left-center	112 (C)	6.04	404
5	Left	-111 (T)	8.71	800
Impervious Case				
1	Right	24.7 (C)	5.68	303
2	Right-center	57.5 (C)	5.47	326
3	Center	84.5 (C)	5.43	331
4	Left-center	111 (C)	6.0	414
5	Left	-84.2 (T)	8.65	808

The axial forces and shear in Table 5 are then compared with allowable pile capacities summarized in Table 1 as determined in Step 3. The results of the comparison show that:

a. The axial compressive forces in the Piles 1, 2 and 3 are both less than the axial compressive pile capacity of 111 kips for both the pervious and impervious conditions. The axial force in pile 4 is slightly over for the pervious case and could be regarded as OK or the piles could be driven slightly deeper.
b. The axial tensile forces from the left (flood side) Pile 5 are less than the allowable tensile force of 113 kips..
c. The shear forces in each of the three piles are lower than the allowable shear of 12.2 kips for both foundation conditions.
d. Moment and axial forces in the piles would also be checked for structural strength according to criteria in the Hurricane and Storm Damage Reduction System Design Guidelines and EM1110-2-2906.

Step 6 Pile Group Analysis (unbalanced force)

6.1 A Group 7 analysis was performed with the unbalance force applied directly to the piles. The uniform unbalanced force above the base of the wall is added as a force and moment at the base of the wall. The distributed loads are statically equivalent to the unbalanced force of 17,480 lb/ft. No loads are applied to the cap except unbalance forces. The p-y springs are set to 0 to the critical failure surface by setting the ultimate shear stress of these soils at a very low value. The distributed loads were computed in the previous step and shown in Table 6. The pile cap forces were computed in the Excel spreadsheet of Attachement 3::

Py = 17,480 lb
Mz = -471,960 in-lb

The pile responses from the Group 7 analysis are shown in Table 10 below:

Table 6. Axial and shear Pile loads per 5-ft of width computed by Group 7 for static equivalent to unbalanced load only.

Pile	Axial (lb)	Shear (lb)
1	-44,800 (T)	5,650
2	-1,780 (T)	5,460
3	42,100 (C)	5,400
4	75,500 (C)	5,980
5	-75,800 (T)	8,590

Step 7 Pile Reinforced Slope Stability Analysis

7.1 The UT4 pile reinforcement analysis using the circle from Step 5 is performed to determine if the target Factor of Safety of 1.4 is achieved. The piles are treated as reinforcements in the UT4 and the shear and axial forces from Step 6 are used to determine these forces. The forces in Table 6 must be converted to unit width conditions by divided by the 5-ft pile spacing to be used as the axial and shear forces in the pile reinforcements in UT4. Additionally, the sign must be changed because compressive forces are negative in UT4. The UT4 forces used for pile reinforceement are shown in the Table 6. The results of the analysis are shown in Figure 16. The factor of safety is 1.526 which is greater than the target factor of safety of 1.4 for global stability. Since the compute factor of safety is slightly below the required value an additional iteration is required. The unbalanced force will be adjusted slightly to improve the global factor of safety.

Table 11. Axial and shear Pile reinforcement forces per unit width for input into UTEXAS4.		
Pile	Axial (lb)	Shear (lb)
1	8,960 (T)	1,130
2	356 (T)	1,092
3	-8,420 (C)	1,080
4	-15,100 (C)	1,196
5	15,160 (T)	1,718

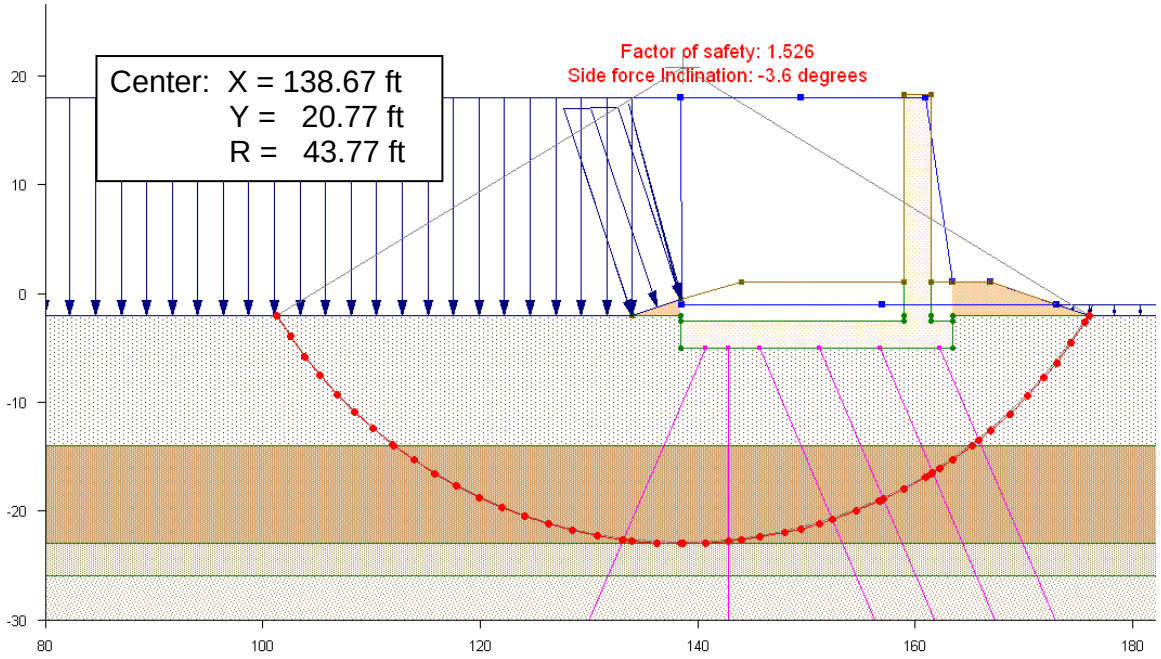

Figure 16. Factor of safety computed using pile forces from Group 7 analysis And critical circle from fixed grid analysis

Attachment 1 – UTexas analysis without piles that results in Figure 1.
Search for Critical Circle

```
EADING
    T-Wall Deep Seated Analysis
    Step 2 Search for unbalanced load

PROFILE LINES
         1    1 Layer 3 (CH) - Floodside
                 .00     -2.00
              134.00     -2.00
              138.50     -2.00

         2    1 Layer 3 (CH) - Landside
              163.50     -2.00
              375.00     -2.00

         3    2 Compacted Fill - FS
              134.00     -2.00
              138.50      -.50

         4    2 Compacted Fill - LS
              163.50      1.00
              167.00      1.00
              176.00     -2.00

         5    3 T-Wall
              138.50     -5.00
              138.50     -2.50
              159.00     -2.50
              159.00     -2.00
              159.00     18.30
              161.50     18.30
              161.50     1.00
              161.50     -2.00
              161.50     -2.50
              163.50     -2.50
              163.50     -5.00

         6    1 Layer 3 (CH) - Under Wall
              138.50     -5.00
              163.50     -5.00

         7    4 Layer 4 (CH)
                 .00    -14.00
              375.00    -14.00

         8    5 Layer 5 (ML)
                 .00    -23.00
              375.00    -23.00

         9    6 Layer 6 (CH)
                 .00    -26.00
              375.00    -26.00

        10    7 Layer 7 (CH)
```

```
               .00    -31.00
            375.00    -31.00

      11    8 Layer 8 (CH)
               .00    -39.00
            375.00    -39.00

      12    9 Layer 9 (CH)
               .00    -65.00
            375.00    -65.00

      13   10 Compacted Fill - Above T Wall Base  FS
            138.50      -.50
            144.00      1.00
            159.00      1.00

      14   10 Compacted Fill - Above T Wall Base  LS
            161.50      1.00
            163.50      1.00


MATERIAL PROPERTIES
     1 Layer 3 (CH)
          80.00 Unit Weight
          Conventional Shear
              120.00       .00
          No Pore Pressure
     2 Compacted Fill
          110.00 Unit Weight
          Conventional Shear
              500.00       .00
          No Pore Pressure
     3 T Wall
          .00 Unit Weight
          Very Strong
     4 Layer 4 (CH)
          100.00 Unit Weight
          Conventional Shear
              120.00       .00
          No Pore Pressure
     5 Layer 5 (ML)
          117.00 Unit Weight
          Conventional Shear
              200.00     15.00
          Piezometric Line
          1
     6 Layer 6 (CH)
          100.00 Unit Weight
          Conventional Shear
              200.00       .00
          No Pore Pressure
     7 Layer 7 (CH)
          100.00 Unit Weight
          Linear Increase
              217.00      8.10
          No Pore Pressure
     8 Layer 8 (CH)
```

```
          100.00 Unit Weight
          Linear Increase
              374.00      8.30
          No Pore Pressure
     9 Layer 9 (CH)
          100.00 Unit Weight
          Linear Increase
              590.00      8.00
          No Pore Pressure
     10 Compacted Fill - Above T-Wall Base
          .00 Unit Weight
          Conventional Shear
                 .00       .00
          No Pore Pressure

PIEZOMETRIC LINES
         1     62.40 Water Level
                 .00     18.00
               138.50     18.00
               138.51     -1.00
               157.00     -1.00
               375.00     -1.00

         2     62.40 Piezometeric levels in ML
                 .00     18.00
               149.50     18.00
               161.00     18.00
               163.50      1.00
               167.00      1.00
               173.00     -1.00
               375.00     -1.00


DISTRIBUTED LOADS
      1
REINFORCEMENT LINES
               1       .00         2
100.00      -100.0      0     0.
140.75      -5.000  0   0

               2        .00        2
145.75      -5.000          0     0.
182.55      -92.00          0.    0.

               3        .00        2
151.25      -5.000        0.     0.
188.05      -92.00        0.     0.

               4        .00        2
156.75      -5.000            0.   0.
193.55      -92.0       0.   0.

               5        .00        2
162.25  -5.000        0.   0.
199.30  -92.00        0.   0.

               6        .00        1
```

```
142.875     -5.00 0.0   0.0
142.875     -37.00      0.0   0.0


ANALYSIS/COMPUTATION
       Circular Search 2
          40.00     40.00
         134.00     10.00
         148.00     10.00
         148.00     30.00
         134.00     30.00
           2.00       .01
     Tangent
         -23.00

SINgle-stage Computations
RIGht Face of Slope
LONg-form output
SORt radii
CRItical
PROcedure for computation of Factor of Safety
SPENCER

GRAPH
COMPUTE
```

Attachment 2 – UTexas analysis with unbalanced load that results in Figure 2. Search for the unbalanced Load

```
HEADING
    T-Wall Deep Seated Analysis
    Step 2 Search for unbalanced load

PROFILE LINES
         1    1 Layer 3 (CH) - Floodside
                 .00     -2.00
              134.00     -2.00
              138.50     -2.00

         2    1 Layer 3 (CH) - Landside
              163.50     -2.00
              375.00     -2.00

         3    2 Compacted Fill - FS
              134.00     -2.00
              138.50      -.50

         4    2 Compacted Fill - LS
              163.50      1.00
              167.00      1.00
              176.00     -2.00

         5    3 T-Wall
              138.50     -5.00
              138.50     -2.50
              159.00     -2.50
              159.00     -2.00
              159.00     18.30
              161.50     18.30
              161.50     1.00
              161.50     -2.00
              161.50     -2.50
              163.50     -2.50
              163.50     -5.00

         6    1 Layer 3 (CH) - Under Wall
              138.50     -5.00
              163.50     -5.00

         7    4 Layer 4 (CH)
                 .00    -14.00
              375.00    -14.00

         8    5 Layer 5 (ML)
                 .00    -23.00
              375.00    -23.00

         9    6 Layer 6 (CH)
                 .00    -26.00
              375.00    -26.00
```

```
      10    7 Layer 7 (CH)
               .00    -31.00
            375.00    -31.00

      11    8 Layer 8 (CH)
               .00    -39.00
            375.00    -39.00

      12    9 Layer 9 (CH)
               .00    -65.00
            375.00    -65.00

      13   10 Compacted Fill - Above T Wall Base  FS
            138.50      -.50
            144.00      1.00
            159.00      1.00

      14   10 Compacted Fill - Above T Wall Base  LS
            161.50      1.00
            163.50      1.00


MATERIAL PROPERTIES
     1 Layer 3 (CH)
          80.00 Unit Weight
          Conventional Shear
              120.00       .00
          No Pore Pressure
     2 Compacted Fill
          110.00 Unit Weight
          Conventional Shear
              500.00       .00
          No Pore Pressure
     3 T Wall
          .00 Unit Weight
          Very Strong
     4 Layer 4 (CH)
          100.00 Unit Weight
          Conventional Shear
              120.00       .00
          No Pore Pressure
     5 Layer 5 (ML)
          117.00 Unit Weight
          Conventional Shear
              200.00     15.00
          Piezometric Line
          1
     6 Layer 6 (CH)
          100.00 Unit Weight
          Conventional Shear
              200.00       .00
          No Pore Pressure
     7 Layer 7 (CH)
          100.00 Unit Weight
          Linear Increase
              217.00      8.10
          No Pore Pressure
```

```
     8 Layer 8 (CH)
          100.00 Unit Weight
          Linear Increase
              374.00      8.30
          No Pore Pressure
     9 Layer 9 (CH)
          100.00 Unit Weight
          Linear Increase
              590.00      8.00
          No Pore Pressure
     10 Compacted Fill - Above T-Wall Base
          .00 Unit Weight
          Conventional Shear
                 .00       .00
          No Pore Pressure

PIEZOMETRIC LINES
         1     62.40 Water Level
                 .00     18.00
               138.50     18.00
               138.51     -1.00
               157.00     -1.00
               375.00     -1.00

         2     62.40 Piezometeric levels in ML
                 .00     18.00
               149.50     18.00
               161.00     18.00
               163.50      1.00
               167.00      1.00
               173.00     -1.00
               375.00     -1.00


DISTRIBUTED LOADS
      1
LINE LOAD
  1 138.5 -11.75 -17480. 0 1

REINFORCEMENT LINES
               1       .00         2
100.00      -100.0      0     0.
140.75      -5.000  0   0

               2        .00        2
145.75      -5.000          0     0.
182.55      -92.00          0.    0.

               3        .00        2
151.25      -5.000        0.     0.
188.05      -92.00        0.     0.

               4        .00        2
156.75      -5.000             0.   0.
193.55      -92.0      0.   0.

               5        .00        2
```

```
162.25  -5.000       0.   0.
199.30  -92.00       0.   0.

              6        .00        1
142.875     -5.00 0.0   0.0
142.875     -37.00      0.0   0.0


ANALYSIS/COMPUTATION
       Circular
      138.67   20.77  43.77
SINgle-stage Computations
RIGht Face of Slope
LONg-form output
SORt radii
CRItical
PROcedure for computation of Factor of Safety
SPENCER

GRAPH
COMPUTE
```

Attachment 3 Structural Loads for CPGA and Group Analyses

US Army Corps of Engineers	PROJECT TITLE:	COMPUTED BY:	DATE:	SHEET:	
Saint Paul Distict	T-Wall Design Example	KDH	07/31/07		
	SUBJECT TITLE:	CHECKED BY:	DATE:		
	Water at El. 18', Pervious				

Input for CPGA pile analysis **Pervious Foundation Assumption**

Upstream Water Elevation	*18*	ft	Back Fill Soil Elevation	*1*	ft
Downstream Water Elevation	*-1*	ft	Front Fill Soil Elevation	*1*	ft
Wall Top Elevation	*18*	ft	Gamma Water	*0.0625*	kcf
Structure Bottom Elevation	*-5*	ft	Gamma Concrete	*0.15*	kcf
Base Width	*25*	ft	Gamma Sat. Backfill	*0.110*	kcf
Toe Width	*2*	ft	Distance to Backfill Break	*5.0*	ft
Wall Thickness	*2.5*	ft	Slope of Back Fill	*0.18*	
Base Thickness	*3.5*	ft	Soil Elevation at Heel	-0.50	ft

Vertical Forces

Component	Height	x1	x2	Gamma	Force	Arm	Moment	
Stem Concrete	19.5	20.5	23	0.15	7.31	21.75	159.0	
Heel Concrete	3.5	0	23	0.15	12.08	11.5	138.9	
Toe Concrete	3.5	23	25	0.15	1.05	24	25.2	
Heel Water	17	0	20.5	0.0625	21.78	10.25	223.3	
Toe Water	0.5	23	25	0.0625	0.06	24	1.5	
Heel Soil	2.5	0	20.5	0.110	5.64	10.25	57.8	
-Triangle	1.50	0	15.5	-0.048	-0.55	5.17	-2.9	
Toe Soil	2.5	23	25	0.110	0.55	24	13.2	
Rect Uplift	-4	0	25	0.0625	-6.25	12.5	-78.1	
Tri Uplift	-19	0	25	0.0625	-14.84	8.3	-123.7	
Sum Vertical Forces					26.8		414.2	ft-k

Horizontal Forces

Component	H1	H2	Gamma	Lat. Coeff.	Force	Arm	Moment	
Driving Water	18	-5	0.0625	1	16.53	7.67	126.74	
Resisting Water	-1	-5	0.0625	1	-0.50	1.33	-0.67	
Lateraral soil forces assumed equal and negligible								
Sum Horizontal Forces					16.03	7.86	126.07	ft-k

Total Structural Forces	Net Vert. Force	Arm	Moment	
About Heel	26.82	20.14	540.25	ft-k

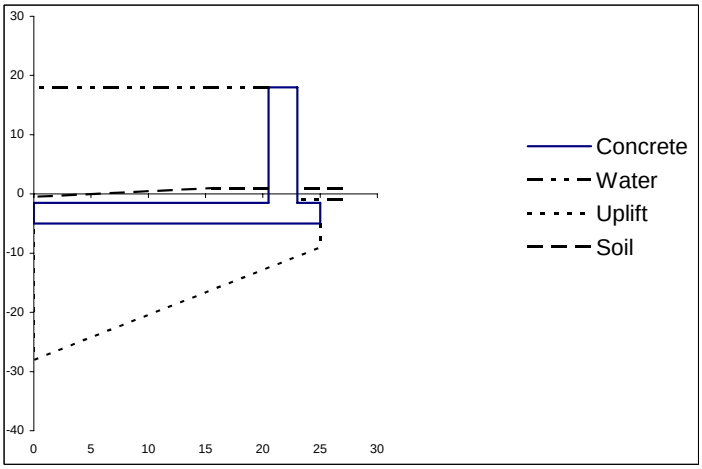

Net Vertical Arm		
From Toe	4.86	ft

Moment About Toe
-130.3 ft-k

Model Width
5 ft

US Army Corps of Engineers Saint Paul Distict	PROJECT TITLE: T-Wall Design Example	COMPUTED BY: KDH	DATE: 07/31/07	SHEET:	
	SUBJECT TITLE: Water at El. 18', Pervious	CHECKED BY:	DATE:		

Calculation of Unbalanced Force

Unbalanced Force. F_{ub}	*17,480*	lb/ft	From UTexas Analysis
Elevation of Critical Surface	*-23.0*	ft	From UTexas Analysis
Length - Ground to Crit. Surface, Lu	22.5	ft	(assume failure surface is normal to pile)
Length - Base to Crit. Surface, Lp	18	ft	
Pile Moment of Inertia. I	*729*	in^4	HP14x73
Pile Modulus of Elasticity E	*29,000,000*	lb/in^2	
Soil Modulus of Subgrade Reaction, k	*100*	lb/in^2	
Soil Stiffness Parameter, R	121	in	$(EI / k)^{1/4}$
Equivalent Unbalanced Force	13,273	lb/ft	$F_{ub} * (L_u/2 +R) / (L_p +R)$

CPGA Input

PX	-146.52	kips
PY		
PZ	134.11	kips
MX	0	
MY	-651.61	kip-ft
MZ	0	

Group Input

4 Pile Rows Parallel to Wall Face

Unbalanced Loading on Piles for Group Analysis

Total	324	lb/in	F_{ub} * Model Width /L_u
50%	162	lb/in	For Pile Row on Flood Side
17%	54	lb/in	

Note: Applied to length of pile from bottom of cap to top of critical surface. 18

Unbalanced Loads on Wall for Group Analysis of Just Unbalanced Forces

Distance From Base to Ground Surface, Ds 4.50 ft

PX	0	lb	
PY	17,480	lb	F_{ub} * Model Width / L_u * Ds
PZ	0	lb	
MX	0		
MY	0		
MZ	-471,960	lb-in	-PZ * Ds/2

Total Loads for Group Analysis

PX	134,114	lb	
PY	97,636	lb	PYub + Sum Horizontal * Model Width
PZ	0	lb	
MX	0		
MY	0		
MZ	7,347,343	lb-in	

US Army Corps of Engineers Saint Paul Distict	PROJECT TITLE: T-Wall Design Example	COMPUTED BY: KDH	DATE: 07/31/07	SHEET:	
	SUBJECT TITLE: Water at El. 18', Impervious	CHECKED BY:	DATE:		

Input for CPGA pile analysis

Upstream Water Elevation	*18*	ft
Downstream Water Elevation	*-1*	ft
Wall Top Elevation	*18*	ft
Structure Bottom Elevation	*-5*	ft
Base Width	*25*	ft
Toe Width	*2*	ft
Wall Thickness	*2.5*	ft
Base Thickness	*3.5*	ft

Impervious Foundation Assumption

Back Fill Soil Elevation	*1*	ft
Front Fill Soil Elevation	*1*	ft
Gamma Water	*0.0625*	kcf
Gamma Concrete	*0.15*	kcf
Gamma Sat. Backfill	*0.110*	kcf
Distance to Backfill Break	*5.0*	ft
Slope of Back Fill	*0.18*	
Soil Elevation at Heel	-0.50	ft

Vertical Forces

Component	Height	x1	x2	Gamma	Force	Arm	Moment	
Stem Concrete	19.5	20.5	23	0.15	7.31	21.75	159.0	
Heel Concrete	3.5	0	23	0.15	12.08	11.5	138.9	
Toe Concrete	3.5	23	25	0.15	1.05	24	25.2	
Heel Water	17	0	20.5	0.0625	21.78	10.25	223.3	
Toe Water	0.5	23	25	0.0625	0.06	24	1.5	
Heel Soil	2.5	0	20.5	0.110	5.64	10.25	57.8	
-Triangle	1.50	0	15.5	-0.048	-0.55	5.17	-2.9	
Toe Soil	2.5	23	25	0.110	0.55	24	13.2	
Prot. Side Uplift	-4	*4*	25	0.0625	-5.25	14.5	-76.1	
Flood Side Uplift	-23	0	4	0.0625	-5.75	2	-11.5	
Sum Vertical Forces					36.9	kip	528.4	ft-k

Horizontal Forces

Component	H1	H2	Gamma	Lat. Coeff.	Force	Arm	Moment	
Driving Water	18	-5	0.0625	1	16.53	7.67	126.74	
Resisting Water	-1	-5	0.0625	1	-0.50	1.33	-0.67	
Lateraral soil forces assumed equal and negligible								
Sum Horizontal Forces					16.03	kip	126.07	ft-k

Total Structural Forces	Net Vert. Force	Arm	Moment	
About Heel	36.92	17.73	654.45	ft-k

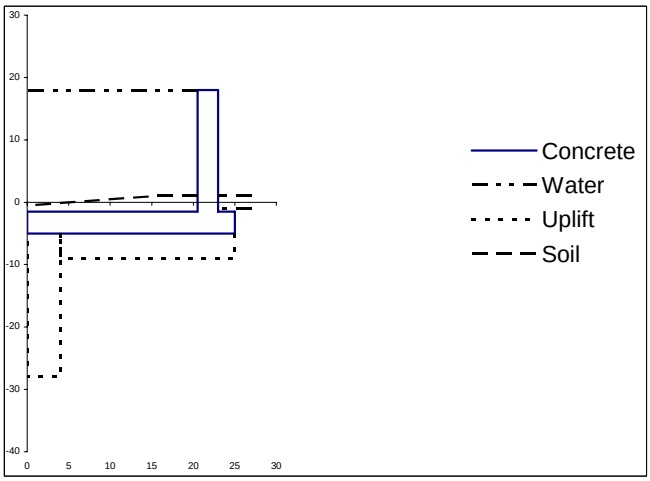

Net Vertical Arm		
From Toe	7.27	ft

Moment About Toe
-268.5 ft-k

Model Width
5 ft

US Army Corps of Engineers	PROJECT TITLE:	COMPUTED BY:	DATE:	SHEET:	
Saint Paul Distict	T-Wall Design Example	KDH	07/31/07		
	SUBJECT TITLE: Water at El. 18', Impervious	CHECKED BY:	DATE:		

Calculation of Unbalanced Force

Unbalanced Force. F_{ub}	*17,480*	lb/ft	From UTexas Analysis
Elevation of Critical Surface	*-23*	ft	From UTexas Analysis
Length - Ground to Crit. Surface, Lu	22.5	ft	(assume failure surface is normal to pile)
Length - Base to Crit. Surface, Lp	18	ft	
Pile Moment of Inertia. I	*729*	in^4	HP14x73
Pile Modulus of Elasticity E	*29,000,000*	lb/in^2	
Soil Modulus of Subgrade Reaction, k	*100*	lb/in^2	
Soil Stiffness Parameter, R	121	in	$(EI / k)^{1/4}$
Equivalent Unbalanced Force	13,273	lb/ft	$F_{ub} * (L_u/2 +R) / (L_p +R)$

CPGA Input

PX	-146.52	kips
PY		
PZ	184.58	kips
MX	0	
MY	-1,342.34	kip-ft
MZ	0	

Group Input

4 Pile Rows Parallel to Wall Face

Unbalanced Loading on Piles for Group Analysis

Total	324	lb/in	$F_{ub} * Model Width / L_u$
50%	162	lb/in	For Pile on Protected Side
17%	54	lb/in	

Note: Applied to length of pile from bottom of cap to top of critical surface. 18 ft

Unbalanced Loads on Wall for Group Analysis of Just Unbalanced Forces

Distance From Base to Ground Surface, Ds 4.50 ft

PX	0	lb	
PY	17,480	lb	$F_{ub} * Model Width / L_u * Ds$
PZ	0	lb	
MX	0		
MY	0		
MZ	-471,960	lb-in	-PZ * Ds/2

Total Loads for Group Analysis

PX	184,583	lb	
PY	97,636	lb	PYub + Sum Horizontal * Model Width
PZ	0	lb	
MX	0		
MY	0		
MZ	15,636,093	lb-in	

Attachment 4 - Preliminary Analysis with CPGA

```
  Input File:

  10 T-wall Example, Water on FS 18, Group Reducton Test - with group
  15 3.5 ft slab, hp 14 x 73 piles, pinned head, 2.5:1 batter
  20 PROP 29000 261 729 21.4 1.0 0 all
  30 SOIL ES 0.00001 "TIP" 87.5 0 1 2 3
  32 SOIL ES 0.00001 "TIP" 87.5 0 4
  37 SOIL ES 0.00001 "TIP" 105.0 0 5
  40 PIN all
  50 ALLOW H 111.0 113.0 315.8  315.8  520.6  1573.1 all
  70 BATTER 2.5 all
  80 ANGLE 180 1 2 3 4
  180 PILE 1  1.250 0.00 0.00
  201 PILE 2  6.75 0.00 0.00
  202 PILE 3  12.25 0.00 0.00
  203 PILE 4  17.75 0.00 0.00
  205 PILE 5  23.75 0.00 0.00
  230 LOAD 1 -146.52  0.0  134.11  0.00  -651.61
  255 LOAD 2 -146.52  0.0  184.58  0.00 -1342.34
  334 FOUT 1 2 3 4 5 6 7 MVN18G5.out
  335 PFO ALL

Output:

 ********************************
 * CASE PROGRAM   #  X0080       *  CPGA - CASE PILE GROUP ANALYSIS PROGRAM
 * VERSION NUMBER # 1993/03/29   *  RUN DATE 31-JUL-2007   RUN TIME 16.36.10
 ********************************


 T-WALL EXAMPLE, WATER ON FS 18, GROUP REDUCTON TEST - WITH GROUP


 THERE ARE    5 PILES AND
              2 LOAD CASES IN THIS RUN.

 ALL PILE COORDINATES ARE CONTAINED WITHIN A BOX
                                      X          Y          Z
                                   -----      -----      -----
 WITH DIAGONAL COORDINATES = (      1.25 ,      .00 ,      .00 )
                             (     23.75 ,      .00 ,      .00 )


 ***************************************************************************

          PILE PROPERTIES AS INPUT


       E           I1           I2           A           C33          B66
     KSI         IN**4        IN**4        IN**2
   .29000E+05   .26100E+03   .72900E+03   .21400E+02   .10000E+01   .00000E+00

 THESE PILE PROPERTIES APPLY TO THE FOLLOWING PILES -
```

ALL

****

SOIL DESCRIPTIONS AS INPUT

ES	ESOIL K/IN**2	LENGTH	L FT	LU FT
	.10000E-04	T	.87500E+02	.00000E+00

THIS SOIL DESCRIPTION APPLIES TO THE FOLLOWING PILES -

1 2 3

ES	ESOIL K/IN**2	LENGTH	L FT	LU FT
	.10000E-04	T	.87500E+02	.00000E+00

THIS SOIL DESCRIPTION APPLIES TO THE FOLLOWING PILES -

4

ES	ESOIL K/IN**2	LENGTH	L FT	LU FT
	.10000E-04	T	.10500E+03	.00000E+00

THIS SOIL DESCRIPTION APPLIES TO THE FOLLOWING PILES -

5

****

PILE GEOMETRY AS INPUT AND/OR GENERATED

NUM	X FT	Y FT	Z FT	BATTER	ANGLE	LENGTH FT	FIXITY
1	1.25	.00	.00	2.50	180.00	94.24	P
2	6.75	.00	.00	2.50	180.00	94.24	P
3	12.25	.00	.00	2.50	180.00	94.24	P
4	17.75	.00	.00	2.50	180.00	94.24	P
5	23.75	.00	.00	2.50	.00	113.09	P
						490.05	

****

APPLIED LOADS

LOAD CASE	PX K	PY K	PZ K	MX FT-K	MY FT-K	MZ FT-K

```
  1    -146.5         .0      134.1          .0       -651.6          .0
  2    -146.5         .0      184.6          .0      -1342.3          .0

*****************************************************************************

         ORIGINAL PILE GROUP STIFFNESS MATRIX

  .36589E+03   .26469E-04  -.59923E+03   .00000E+00   .41347E+05   .30175E-02
  .26469E-04   .32977E-01  -.66172E-04   .00000E+00   .75436E-02   .48872E+01
 -.59923E+03  -.66172E-04   .22866E+04   .00000E+00  -.32808E+06  -.75436E-02
  .00000E+00   .00000E+00   .00000E+00   .00000E+00   .00000E+00   .00000E+00
  .41347E+05   .75436E-02  -.32808E+06   .00000E+00   .66918E+08   .12203E+01
  .30175E-02   .48872E+01  -.75436E-02   .00000E+00   .12203E+01   .10222E+04


S(4,4)=0.  PROBLEM WILL BE TREATED AS TWO DIMENSIONAL IN THE X-Z PLANE.

LOAD CASE    1.  NUMBER OF FAILURES =    2.  NUMBER OF PILES IN TENSION =    1.

LOAD CASE    2.  NUMBER OF FAILURES =    1.  NUMBER OF PILES IN TENSION =    1.

*****************************************************************************

         PILE CAP DISPLACEMENTS

LOAD
CASE       DX          DZ          R
           IN          IN         RAD

   1   -.7899E+00  -.3207E+00  -.1201E-02
   2   -.6897E+00  -.2476E+00  -.1028E-02

*****************************************************************************
              ELASTIC CENTER INFORMATION


ELASTIC CENTER IN PLANE X-Z         X            Z
                                   FT           FT
                                 16.62       -17.81

LOAD    MOMENT IN
CASE    X-Z PLANE
   1  .70738E+07
   2  .29723E+08

*****************************************************************************

         PILE FORCES IN LOCAL GEOMETRY

             M1 & M2 NOT AT PILE HEAD FOR PINNED PILES
```

```
            * INDICATES PILE FAILURE
            # INDICATES CBF BASED ON MOMENTS DUE TO
                        (F3*EMIN) FOR CONCRETE PILES
            B INDICATES BUCKLING CONTROLS
```

LOAD CASE - 1

PILE	F1 K	F2 K	F3 K	M1 IN-K	M2 IN-K	M3 IN-K	ALF	CBF	
1	.0	.0	6.8	.0	-4.0	.0	.06	.02	
2	.0	.0	47.2	.0	-3.8	.0	.42	.15	
3	.0	.0	87.6	.0	-3.7	.0	.79	.28	
4	.0	.0	127.9	.0	-3.5	.0	1.15	.41	*
5	.0	.0	-125.0	.0	3.5	.0	1.11	.40	*

LOAD CASE - 2

PILE	F1 K	F2 K	F3 K	M1 IN-K	M2 IN-K	M3 IN-K	ALF	CBF	
1	.0	.0	22.3	.0	-3.4	.0	.20	.07	
2	.0	.0	56.9	.0	-3.3	.0	.51	.18	
3	.0	.0	91.4	.0	-3.2	.0	.82	.29	
4	.0	.0	126.0	.0	-3.0	.0	1.14	.40	*
5	.0	.0	-97.8	.0	3.1	.0	.87	.31	

****

PILE FORCES IN GLOBAL GEOMETRY

LOAD CASE - 1

PILE	PX K	PY K	PZ K	MX IN-K	MY IN-K	MZ IN-K
1	-2.5	.0	6.3	.0	.0	.0
2	-17.5	.0	43.8	.0	.0	.0
3	-32.5	.0	81.3	.0	.0	.0
4	-47.5	.0	118.8	.0	.0	.0
5	-46.4	.0	-116.0	.0	.0	.0

LOAD CASE - 2

PILE	PX K	PY K	PZ K	MX IN-K	MY IN-K	MZ IN-K
1	-8.3	.0	20.7	.0	.0	.0
2	-21.1	.0	52.8	.0	.0	.0
3	-34.0	.0	84.9	.0	.0	.0

```
4       -46.8         .0      117.0          .0          .0          .0
5       -36.3         .0      -90.8          .0          .0          .0
```

Attachment 5. Group 7 Output File for Pervious Condition

```
================================================================================

                GROUP for Windows, Version 7.0.7

                  Analysis of A Group of Piles
               Subjected to Axial and Lateral Loading

                (c) Copyright ENSOFT, Inc., 1987-2006
                      All Rights Reserved

================================================================================


This program is licensed to:

k
c

Path to file locations:      C:\KDH\New Orleans\T-walls\Group\
Name of input data file:     18 pervious Example.gpd
Name of output file:         18 pervious Example.gpo
Name of plot output file:    18 pervious Example.gpp
Name of runtime file:        18 pervious Example.gpr
Name of output summary file: 18 pervious Example.gpt


--------------------------------------------------------------------------------
                           Time and Date of Analysis
--------------------------------------------------------------------------------

               Date:  July 31, 2007     Time:  14:43: 5
 PILE GROUP ANALYSIS PROGRAM-GROUP
 PC VERSION 6.0 (C) COPYRIGHT ENSOFT,INC. 2000

 THE PROGRAM WAS COMPILED USING MICROSOFT FORTRAN
 POWERSTATION 4.0 (C) COPYRIGHT MICROSOFT CORPORATION, 1996.


     T-wall Examplel : F.S. 18.0, P.S. -1.0,  Pervious Foundation Condition


                *****     INPUT INFORMATION     *****


     * TABLE C *  LOAD AND CONTROL PARAMETERS

     UNITS--

          V LOAD,LBS     H LOAD,LBS    MOMENT,LBS-IN
```

```
   0.1341E+06     0.9764E+05     0.7347E+07

 GROUP NO. 1

              DISTRIBUTED LOAD CURVE           2 POINTS

                        X,IN      LOAD,LBS/IN
                        0.00        0.527E+02
                      216.00        0.527E+02

 GROUP NO. 2

              DISTRIBUTED LOAD CURVE           2 POINTS

                        X,IN      LOAD,LBS/IN
                        0.00        0.527E+02
                      216.00        0.527E+02

 GROUP NO. 3

              DISTRIBUTED LOAD CURVE           2 POINTS

                        X,IN      LOAD,LBS/IN
                        0.00        0.527E+02
                      216.00        0.527E+02

 GROUP NO. 4

              DISTRIBUTED LOAD CURVE           2 POINTS

                        X,IN      LOAD,LBS/IN
                        0.00        0.606E+02
                      216.00        0.606E+02

 GROUP NO. 5

              DISTRIBUTED LOAD CURVE           2 POINTS

                        X,IN      LOAD,LBS/IN
                        0.00        0.105E+03
                      216.00        0.105E+03


* THE LOADING IS STATIC *

   KPYOP =  0     (CODE TO GENERATE P-Y CURVES)

   ( KPYOP = 1 IF P-Y YES; = 0 IF P-Y NO; = -1 IF P-Y ONLY )
```

```
* CONTROL PARAMETERS *
    TOLERANCE ON CONVERGENCE OF FOUNDATION REACTION      =  0.100E-04 IN
    TOLERANCE ON DETERMINATION OF DEFLECTIONS            =  0.100E-04 IN
    MAX NO OF ITERATIONS ALLOWED FOR FOUNDATION ANALYSIS =     100
    MAXIMUM NO. OF ITERATIONS ALLOWED FOR PILE ANALYSIS  =     100



* TABLE D *   ARRANGEMENT OF PILE GROUPS

  GROUP  CONNECT  NO OF PILE PILE NO  L-S CURVE  P-Y CURVE
    1      PIN         1        1         1           0
    2      PIN         1        1         1           0
    3      PIN         1        1         1           0
    4      PIN         1        1         1           0
    5      PIN         1        2         2           0

  GROUP         VERT,IN     HOR,IN    SLOPE,IN/IN  GROUND,IN SPRING,LBS-IN
    1         0.0000E+00 -0.1500E+02  0.3805E+00 -0.3600E+02  0.0000E+00
    2         0.0000E+00 -0.8100E+02  0.3805E+00 -0.3600E+02  0.0000E+00
    3         0.0000E+00 -0.1470E+03  0.3805E+00 -0.3600E+02  0.0000E+00
    4         0.0000E+00 -0.2130E+03  0.3805E+00 -0.3600E+02  0.0000E+00
    5         0.0000E+00 -0.2850E+03 -0.3805E+00 -0.3600E+02  0.0000E+00
    6         0.0000E+00  0.0000E+00  0.0000E+00  0.0000E+00  0.0000E+00



* TABLE E *   PILE GEOMETRY AND PROPERTIES
              PILE TYPE = 1 - DRIVEN PILE
                        = 2 - DRILLED SHAFT

  PILE  SEC  INC       LENGTH, IN     E  ,LBS/IN**2 PILE TYPE
    1    1    94       0.1124E+04     0.2900E+08        1
    2    1    94       0.1357E+04     0.2900E+08        1

  PILE   FROM,IN      TO,IN      DIAM,IN   AREA,IN**2    I,IN**4

    1  0.0000E+00  0.1124E+04  0.1400E+02  0.2140E+02  0.7290E+03

      * THE PILE ABOVE IS OF LINEARLY ELASTIC MATERIAL *

    2  0.0000E+00  0.1357E+04  0.1400E+02  0.2140E+02  0.7290E+03

      * THE PILE ABOVE IS OF LINEARLY ELASTIC MATERIAL *



* TABLE F *   AXIAL LOAD VS SETTLEMENT

(THE LOAD-SETTLEMENT CURVE OF SINGLE PILE IS GENERATED INTERNALLY)

  NUM OF CURVES  2

   CURVE  1          NUM OF POINTS = 19

       POINT       AXIAL LOAD,LBS      SETTLEMENT, IN
```

1	-0.1891E+06	-0.2251E+01
2	-0.1787E+06	-0.1234E+01
3	-0.1735E+06	-0.7251E+00
4	-0.1415E+06	-0.2707E+00
5	-0.1307E+06	-0.2010E+00
6	-0.4273E+05	-0.5355E-01
7	-0.2066E+05	-0.2609E-01
8	-0.4091E+04	-0.5188E-02
9	-0.4091E+03	-0.5188E-03
10	0.0000E+00	0.0000E+00
11	0.7980E+03	0.9819E-03
12	0.4913E+04	0.6167E-02
13	0.2352E+05	0.2946E-01
14	0.4697E+05	0.5852E-01
15	0.1339E+06	0.2068E+00
16	0.1454E+06	0.2779E+00
17	0.1824E+06	0.7411E+00
18	0.1908E+06	0.1256E+01
19	0.2052E+06	0.2280E+01

CURVE 2 NUM OF POINTS = 19

POINT	AXIAL LOAD,LBS	SETTLEMENT, IN
1	-0.2895E+06	-0.2450E+01
2	-0.2689E+06	-0.1413E+01
3	-0.2586E+06	-0.8941E+00
4	-0.1956E+06	-0.3808E+00
5	-0.1747E+06	-0.2904E+00
6	-0.7760E+05	-0.9714E-01
7	-0.3898E+05	-0.4799E-01
8	-0.7512E+04	-0.9355E-02
9	-0.7512E+03	-0.9355E-03
10	0.0000E+00	0.0000E+00
11	0.7529E+03	0.9375E-03
12	0.7529E+04	0.9375E-02
13	0.3907E+05	0.4810E-01
14	0.7775E+05	0.9734E-01
15	0.1749E+06	0.2908E+00
16	0.1960E+06	0.3816E+00
17	0.2594E+06	0.8961E+00
18	0.2701E+06	0.1415E+01
19	0.2908E+06	0.2453E+01

* TABLE H * SOIL DATA FOR AUTO P-Y CURVES

SOILS INFORMATION

AT THE GROUND SURFACE = -36.00 IN

6 LAYER(S) OF SOIL

LAYER 1
THE SOIL IS A SOFT CLAY
X AT THE TOP OF THE LAYER = -36.00 IN

```
X AT THE BOTTOM OF THE LAYER     =     216.00 IN
MODULUS OF SUBGRADE REACTION     =  0.100E+00 LBS/IN**3

LAYER  2
THE SOIL IS A SILT
X AT THE TOP OF THE LAYER        =     216.00 IN
X AT THE BOTTOM OF THE LAYER     =     252.00 IN
MODULUS OF SUBGRADE REACTION     =  0.300E+02 LBS/IN**3

LAYER  3
THE SOIL IS A SOFT CLAY
X AT THE TOP OF THE LAYER        =     252.00 IN
X AT THE BOTTOM OF THE LAYER     =     720.00 IN
MODULUS OF SUBGRADE REACTION     =  0.300E+02 LBS/IN**3

LAYER  4
THE SOIL IS A STIFF CLAY BELOW THE WATER TABLE
X AT THE TOP OF THE LAYER        =     720.00 IN
X AT THE BOTTOM OF THE LAYER     =     973.00 IN
MODULUS OF SUBGRADE REACTION     =  0.100E+03 LBS/IN**3

LAYER  5
THE SOIL IS A SAND
X AT THE TOP OF THE LAYER        =     973.00 IN
X AT THE BOTTOM OF THE LAYER     =    1273.00 IN
MODULUS OF SUBGRADE REACTION     =  0.600E+02 LBS/IN**3

LAYER  6
THE SOIL IS A STIFF CLAY BELOW THE WATER TABLE
X AT THE TOP OF THE LAYER        =    1273.00 IN
X AT THE BOTTOM OF THE LAYER     =    1600.00 IN
MODULUS OF SUBGRADE REACTION     =  0.100E+03 LBS/IN**3


DISTRIBUTION OF EFFECTIVE UNIT WEIGHT WITH DEPTH
                 16 POINTS

           X,IN   WEIGHT,LBS/IN**3
        -36.0000     0.1010E-01
        108.0000     0.1010E-01
        108.0000     0.2170E-01
        216.0000     0.2170E-01
        216.0000     0.3150E-01
        252.0000     0.3150E-01
        252.0000     0.2170E-01
        720.0000     0.2170E-01
        720.0000     0.2750E-01
        900.0000     0.2750E-01
        900.0000     0.3330E-01
        972.0000     0.3330E-01
        972.0000     0.3440E-01
       1273.0000     0.3440E-01
       1273.0000     0.3210E-01
       1600.0000     0.3210E-01


DISTRIBUTION OF STRENGTH PARAMETERS WITH DEPTH
```

16 POINTS

X IN	C LBS/IN**2	PHI,DEGREES	E50	FMAX LBS/IN**2	TIPMAX LBS/IN**2
-36.00	0.1000E-04	0.000	0.2500E-01	0.0000E+00	0.0000E+00
216.00	0.1000E-04	0.000	0.2500E-01	0.0000E+00	0.0000E+00
216.00	0.1390E+01	15.000	0.2500E-01	0.2400E+01	0.0000E+00
252.00	0.1390E+01	15.000	0.2500E-01	0.2700E+01	0.0000E+00
252.00	0.1390E+01	0.000	0.2500E-01	0.1390E+01	0.0000E+00
408.00	0.1390E+01	0.000	0.2500E-01	0.1390E+01	0.0000E+00
408.00	0.2590E+01	0.000	0.2000E-01	0.2590E+01	0.0000E+00
720.00	0.4100E+01	0.000	0.1000E-01	0.4100E+01	0.0000E+00
720.00	0.4100E+01	0.000	0.1000E-01	0.4100E+01	0.0000E+00
780.00	0.4300E+01	0.000	0.1000E-01	0.4300E+01	0.0000E+00
780.00	0.5500E+01	0.000	0.1000E-01	0.5500E+01	0.0000E+00
973.00	0.5500E+01	0.000	0.1000E-01	0.5500E+01	0.0000E+00
973.00	0.0000E+00	30.000	0.0000E+00	0.1300E+02	0.0000E+00
1273.00	0.0000E+00	30.000	0.0000E+00	0.1400E+02	0.0000E+00
1273.00	0.6800E+01	0.000	0.1000E-01	0.6800E+01	0.0000E+00
1600.00	0.6800E+01	0.000	0.1000E-01	0.6800E+01	0.0000E+00

REDUCTION FACTORS FOR CLOSELY-SPACED PILE GROUPS

GROUP NO	P-FACTOR	Y-FACTOR
1	1.00	1.00
2	0.87	1.00
3	0.87	1.00
4	0.87	1.00
5	0.89	1.00

T-wall Examplel : F.S. 18.0, P.S. -1.0, Pervious Foundation Condition

***** COMPUTATION RESULTS *****

VERT. LOAD, LBS	HORI. LOAD, LBS	MOMENT,IN-LBS
0.1341E+06	0.9764E+05	0.7347E+07

DISPLACEMENT OF GROUPED PILE FOUNDATION

VERTICAL,IN	HORIZONTAL,IN	ROTATION,RAD
-0.2120E+00	0.5254E+00	0.8644E-03

NUMBER OF ITERATIONS = 4

* TABLE I * COMPUTATION ON INDIVIDUAL PILE

* PILE GROUP * 1

PILE TOP DISPLACEMENTS AND REACTIONS

THE GLOBAL STRUCTURE COORDINATE SYSTEM

XDISPL,IN	YDISPL,IN	SLOPE	AXIAL,LBS	LAT,LBS	BM,LBS-IN	STRESS,LBS/IN**2
-0.199E+00	0.525E+00	-.408E-03	0.978E+04	-0.237E+04	0.000E+00	0.383E+03

THE LOCAL MEMBER COORDINATE SYSTEM

XDISPL,IN	YDISPL,IN	SLOPE	AXIAL,LBS	LAT,LBS	BM,LBS-IN	STRESS,LBS/IN**2
0.103E-01	0.562E+00	-.408E-03	0.820E+04	-0.584E+04	0.000E+00	0.383E+03

LATERALLY LOADED PILE

X IN	DEFLECTION IN	MOMENT LBS-IN	SHEAR LBS	SOIL REACTION LBS/IN	TOTAL STRESS LBS/IN**2	FLEXURAL RIGIDITY LBS-IN**2
0.00	0.562E+00	0.000E+00	-0.521E+04	0.543E-03	0.383E+03	0.211E+11
11.96	0.557E+00	0.622E+05	-0.489E+04	0.542E-03	0.981E+03	0.211E+11
23.91	0.552E+00	0.117E+06	-0.426E+04	0.540E-03	0.151E+04	0.211E+11
35.87	0.545E+00	0.164E+06	-0.363E+04	0.538E-03	0.196E+04	0.211E+11
47.83	0.538E+00	0.204E+06	-0.300E+04	0.536E-03	0.234E+04	0.211E+11
59.79	0.530E+00	0.236E+06	-0.237E+04	0.533E-03	0.265E+04	0.211E+11
71.74	0.520E+00	0.260E+06	-0.174E+04	0.530E-03	0.288E+04	0.211E+11
83.70	0.508E+00	0.277E+06	-0.111E+04	0.525E-03	0.304E+04	0.211E+11
95.66	0.494E+00	0.287E+06	-0.481E+03	0.521E-03	0.313E+04	0.211E+11
107.62	0.478E+00	0.288E+06	0.149E+03	0.515E-03	0.315E+04	0.211E+11
119.57	0.460E+00	0.283E+06	0.779E+03	0.509E-03	0.310E+04	0.211E+11
131.53	0.441E+00	0.269E+06	0.141E+04	0.501E-03	0.297E+04	0.211E+11
143.49	0.419E+00	0.249E+06	0.204E+04	0.493E-03	0.277E+04	0.211E+11
155.45	0.396E+00	0.220E+06	0.267E+04	0.484E-03	0.250E+04	0.211E+11
167.40	0.372E+00	0.184E+06	0.330E+04	0.474E-03	0.215E+04	0.211E+11
179.36	0.346E+00	0.141E+06	0.393E+04	0.462E-03	0.174E+04	0.211E+11
191.32	0.319E+00	0.900E+05	0.456E+04	0.450E-03	0.125E+04	0.211E+11
203.28	0.292E+00	0.315E+05	0.519E+04	0.437E-03	0.686E+03	0.211E+11
215.23	0.264E+00	-0.346E+05	0.582E+04	0.423E-03	0.715E+03	0.211E+11
227.19	0.237E+00	-0.108E+06	0.566E+04	0.795E+02	0.142E+04	0.211E+11
239.15	0.210E+00	-0.170E+06	0.436E+04	0.138E+03	0.202E+04	0.211E+11
251.11	0.184E+00	-0.213E+06	0.249E+04	0.175E+03	0.243E+04	0.211E+11
263.06	0.160E+00	-0.230E+06	0.133E+04	0.200E+02	0.260E+04	0.211E+11

```
     275.02  0.138E+00 -0.245E+06  0.108E+04  0.220E+02  0.274E+04  0.211E+11
     286.98  0.117E+00 -0.257E+06  0.806E+03  0.238E+02  0.285E+04  0.211E+11
     298.94  0.979E-01 -0.265E+06  0.513E+03  0.251E+02  0.292E+04  0.211E+11
     310.89  0.806E-01 -0.269E+06  0.207E+03  0.261E+02  0.297E+04  0.211E+11
     322.85  0.651E-01 -0.270E+06 -0.109E+03  0.267E+02  0.298E+04  0.211E+11
     334.81  0.514E-01 -0.267E+06 -0.430E+03  0.269E+02  0.295E+04  0.211E+11
     346.77  0.395E-01 -0.260E+06 -0.751E+03  0.267E+02  0.288E+04  0.211E+11

     NUMBER OF ITERATIONS IN LLP =    18


       * PILE GROUP *  2


 PILE TOP DISPLACEMENTS AND REACTIONS


       THE GLOBAL STRUCTURE COORDINATE SYSTEM
       --------------------------------------

 XDISPL,IN   YDISPL,IN   SLOPE   AXIAL,LBS  LAT,LBS  BM,LBS-IN
STRESS,LBS/IN**2

-0.142E+00  0.525E+00 -.879E-04 0.485E+05 0.128E+05 0.000E+00   0.232E+04


       THE LOCAL MEMBER COORDINATE SYSTEM
       ----------------------------------

 XDISPL,IN   YDISPL,IN   SLOPE   AXIAL,LBS  LAT,LBS  BM,LBS-IN
STRESS,LBS/IN**2

 0.633E-01  0.541E+00 -.879E-04 0.497E+05-0.611E+04 0.000E+00   0.232E+04


          LATERALLY LOADED PILE


         X  DEFLECTION    MOMENT     SHEAR      SOIL       TOTAL    FLEXURAL
                                                REACTION    STRESS   RIGIDITY
        IN       IN        LBS-IN      LBS      LBS/IN    LBS/IN**2  LBS-IN**2
      ***** ********** ********** ********** ********** ********** **********
       0.00  0.541E+00  0.000E+00 -0.548E+04  0.464E-03  0.232E+04  0.211E+11
      11.96  0.540E+00  0.655E+05 -0.517E+04  0.464E-03  0.295E+04  0.211E+11
      23.91  0.538E+00  0.123E+06 -0.454E+04  0.464E-03  0.351E+04  0.211E+11
      35.87  0.536E+00  0.174E+06 -0.391E+04  0.463E-03  0.399E+04  0.211E+11
      47.83  0.532E+00  0.217E+06 -0.328E+04  0.462E-03  0.440E+04  0.211E+11
      59.79  0.527E+00  0.252E+06 -0.265E+04  0.460E-03  0.474E+04  0.211E+11
      71.74  0.521E+00  0.279E+06 -0.202E+04  0.458E-03  0.501E+04  0.211E+11
      83.70  0.512E+00  0.299E+06 -0.139E+04  0.456E-03  0.520E+04  0.211E+11
      95.66  0.501E+00  0.312E+06 -0.758E+03  0.453E-03  0.532E+04  0.211E+11
     107.62  0.489E+00  0.316E+06 -0.128E+03  0.449E-03  0.536E+04  0.211E+11
     119.57  0.474E+00  0.313E+06  0.502E+03  0.444E-03  0.533E+04  0.211E+11
     131.53  0.457E+00  0.303E+06  0.113E+04  0.439E-03  0.523E+04  0.211E+11
     143.49  0.438E+00  0.285E+06  0.176E+04  0.433E-03  0.506E+04  0.211E+11
     155.45  0.417E+00  0.259E+06  0.239E+04  0.426E-03  0.481E+04  0.211E+11
     167.40  0.394E+00  0.225E+06  0.302E+04  0.418E-03  0.449E+04  0.211E+11
```

```
     179.36  0.370E+00  0.184E+06  0.365E+04  0.409E-03  0.409E+04  0.211E+11
     191.32  0.345E+00  0.135E+06  0.428E+04  0.400E-03  0.362E+04  0.211E+11
     203.28  0.318E+00  0.790E+05  0.491E+04  0.389E-03  0.308E+04  0.211E+11
     215.23  0.291E+00  0.152E+05  0.554E+04  0.378E-03  0.247E+04  0.211E+11
     227.19  0.264E+00 -0.562E+05  0.540E+04  0.768E+02  0.286E+04  0.211E+11
     239.15  0.238E+00 -0.117E+06  0.425E+04  0.116E+03  0.344E+04  0.211E+11
     251.11  0.212E+00 -0.160E+06  0.268E+04  0.146E+03  0.386E+04  0.211E+11
     263.06  0.187E+00 -0.183E+06  0.170E+04  0.182E+02  0.408E+04  0.211E+11
     275.02  0.164E+00 -0.203E+06  0.147E+04  0.202E+02  0.428E+04  0.211E+11
     286.98  0.142E+00 -0.221E+06  0.122E+04  0.219E+02  0.444E+04  0.211E+11
     298.94  0.121E+00 -0.235E+06  0.948E+03  0.233E+02  0.458E+04  0.211E+11
     310.89  0.102E+00 -0.245E+06  0.662E+03  0.244E+02  0.468E+04  0.211E+11


     NUMBER OF ITERATIONS IN LLP =    18


       * PILE GROUP *  3


 PILE TOP DISPLACEMENTS AND REACTIONS


       THE GLOBAL STRUCTURE COORDINATE SYSTEM
       --------------------------------------

 XDISPL,IN   YDISPL,IN   SLOPE   AXIAL,LBS  LAT,LBS  BM,LBS-IN
STRESS,LBS/IN**2

-0.850E-01  0.525E+00 -.116E-05 0.773E+05 0.243E+05 0.000E+00   0.378E+04


       THE LOCAL MEMBER COORDINATE SYSTEM
       ----------------------------------

 XDISPL,IN   YDISPL,IN   SLOPE   AXIAL,LBS  LAT,LBS  BM,LBS-IN
STRESS,LBS/IN**2

 0.116E+00  0.519E+00 -.116E-05 0.808E+05-0.617E+04 0.000E+00   0.378E+04


          LATERALLY LOADED PILE


         X  DEFLECTION    MOMENT     SHEAR      SOIL       TOTAL    FLEXURAL
                                                REACTION    STRESS   RIGIDITY
        IN      IN        LBS-IN      LBS      LBS/IN    LBS/IN**2  LBS-IN**2
      ***** ********** ********** ********** ********** ********** **********
       0.00  0.519E+00  0.000E+00 -0.554E+04  0.458E-03  0.378E+04  0.211E+11
      11.96  0.519E+00  0.662E+05 -0.522E+04  0.458E-03  0.441E+04  0.211E+11
      23.91  0.519E+00  0.125E+06 -0.459E+04  0.458E-03  0.498E+04  0.211E+11
      35.87  0.518E+00  0.176E+06 -0.396E+04  0.458E-03  0.547E+04  0.211E+11
      47.83  0.515E+00  0.219E+06 -0.333E+04  0.457E-03  0.588E+04  0.211E+11
      59.79  0.511E+00  0.255E+06 -0.270E+04  0.456E-03  0.623E+04  0.211E+11
      71.74  0.505E+00  0.283E+06 -0.207E+04  0.454E-03  0.650E+04  0.211E+11
      83.70  0.498E+00  0.303E+06 -0.144E+04  0.452E-03  0.669E+04  0.211E+11
      95.66  0.488E+00  0.316E+06 -0.811E+03  0.449E-03  0.681E+04  0.211E+11
```

```
     107.62  0.476E+00  0.321E+06 -0.181E+03  0.445E-03  0.686E+04  0.211E+11
     119.57  0.462E+00  0.318E+06  0.449E+03  0.441E-03  0.683E+04  0.211E+11
     131.53  0.446E+00  0.308E+06  0.108E+04  0.435E-03  0.673E+04  0.211E+11
     143.49  0.428E+00  0.290E+06  0.171E+04  0.429E-03  0.656E+04  0.211E+11
     155.45  0.408E+00  0.264E+06  0.234E+04  0.423E-03  0.631E+04  0.211E+11
     167.40  0.386E+00  0.230E+06  0.297E+04  0.415E-03  0.599E+04  0.211E+11
     179.36  0.362E+00  0.189E+06  0.360E+04  0.406E-03  0.559E+04  0.211E+11
     191.32  0.338E+00  0.140E+06  0.423E+04  0.397E-03  0.513E+04  0.211E+11
     203.28  0.312E+00  0.840E+05  0.486E+04  0.386E-03  0.458E+04  0.211E+11
     215.23  0.285E+00  0.200E+05  0.549E+04  0.375E-03  0.397E+04  0.211E+11
     227.19  0.259E+00 -0.516E+05  0.536E+04  0.753E+02  0.427E+04  0.211E+11
     239.15  0.233E+00 -0.112E+06  0.421E+04  0.116E+03  0.486E+04  0.211E+11
     251.11  0.208E+00 -0.156E+06  0.264E+04  0.147E+03  0.528E+04  0.211E+11
     263.06  0.183E+00 -0.179E+06  0.165E+04  0.181E+02  0.550E+04  0.211E+11
     275.02  0.160E+00 -0.200E+06  0.142E+04  0.201E+02  0.569E+04  0.211E+11
     286.98  0.138E+00 -0.217E+06  0.117E+04  0.217E+02  0.586E+04  0.211E+11
     298.94  0.118E+00 -0.231E+06  0.905E+03  0.232E+02  0.600E+04  0.211E+11
     310.89  0.995E-01 -0.242E+06  0.621E+03  0.243E+02  0.610E+04  0.211E+11
     322.85  0.825E-01 -0.249E+06  0.326E+03  0.250E+02  0.617E+04  0.211E+11
     334.81  0.671E-01 -0.252E+06  0.244E+02  0.255E+02  0.620E+04  0.211E+11
     346.77  0.534E-01 -0.252E+06 -0.281E+03  0.256E+02  0.619E+04  0.211E+11

     NUMBER OF ITERATIONS IN LLP =    16


       * PILE GROUP *  4


 PILE TOP DISPLACEMENTS AND REACTIONS


       THE GLOBAL STRUCTURE COORDINATE SYSTEM
       --------------------------------------

 XDISPL,IN   YDISPL,IN   SLOPE   AXIAL,LBS  LAT,LBS  BM,LBS-IN
STRESS,LBS/IN**2

-0.279E-01  0.525E+00 0.585E-03 0.107E+06 0.347E+05 0.000E+00   0.523E+04


       THE LOCAL MEMBER COORDINATE SYSTEM
       ----------------------------------

 XDISPL,IN   YDISPL,IN   SLOPE   AXIAL,LBS  LAT,LBS  BM,LBS-IN
STRESS,LBS/IN**2

 0.169E+00  0.498E+00 0.585E-03 0.112E+06-0.736E+04 0.000E+00   0.523E+04


          LATERALLY LOADED PILE


         X  DEFLECTION    MOMENT     SHEAR      SOIL       TOTAL    FLEXURAL
                                               REACTION     STRESS   RIGIDITY
        IN      IN        LBS-IN      LBS      LBS/IN    LBS/IN**2  LBS-IN**2
      ***** ********** ********** ********** ********** ********** **********
       0.00  0.498E+00  0.000E+00 -0.664E+04  0.452E-03  0.523E+04  0.211E+11
```

```
      11.96  0.505E+00  0.802E+05 -0.628E+04  0.454E-03  0.600E+04  0.211E+11
      23.91  0.512E+00  0.152E+06 -0.555E+04  0.456E-03  0.668E+04  0.211E+11
      35.87  0.517E+00  0.214E+06 -0.483E+04  0.457E-03  0.729E+04  0.211E+11
      47.83  0.521E+00  0.268E+06 -0.410E+04  0.459E-03  0.780E+04  0.211E+11
      59.79  0.523E+00  0.313E+06 -0.338E+04  0.459E-03  0.823E+04  0.211E+11
      71.74  0.523E+00  0.349E+06 -0.265E+04  0.459E-03  0.858E+04  0.211E+11
      83.70  0.521E+00  0.376E+06 -0.193E+04  0.459E-03  0.884E+04  0.211E+11
      95.66  0.516E+00  0.394E+06 -0.120E+04  0.457E-03  0.902E+04  0.211E+11
     107.62  0.509E+00  0.404E+06 -0.479E+03  0.455E-03  0.910E+04  0.211E+11
     119.57  0.498E+00  0.404E+06  0.246E+03  0.452E-03  0.911E+04  0.211E+11
     131.53  0.485E+00  0.395E+06  0.970E+03  0.448E-03  0.902E+04  0.211E+11
     143.49  0.470E+00  0.377E+06  0.169E+04  0.443E-03  0.885E+04  0.211E+11
     155.45  0.451E+00  0.351E+06  0.242E+04  0.437E-03  0.860E+04  0.211E+11
     167.40  0.431E+00  0.315E+06  0.314E+04  0.430E-03  0.826E+04  0.211E+11
     179.36  0.408E+00  0.271E+06  0.387E+04  0.423E-03  0.783E+04  0.211E+11
     191.32  0.384E+00  0.217E+06  0.459E+04  0.414E-03  0.732E+04  0.211E+11
     203.28  0.358E+00  0.155E+06  0.532E+04  0.404E-03  0.672E+04  0.211E+11
     215.23  0.330E+00  0.843E+05  0.604E+04  0.394E-03  0.604E+04  0.211E+11
     227.19  0.303E+00  0.467E+04  0.588E+04  0.880E+02  0.527E+04  0.211E+11
     239.15  0.275E+00 -0.624E+05  0.469E+04  0.112E+03  0.583E+04  0.211E+11
     251.11  0.248E+00 -0.114E+06  0.318E+04  0.140E+03  0.632E+04  0.211E+11
     263.06  0.221E+00 -0.144E+06  0.222E+04  0.193E+02  0.662E+04  0.211E+11
     275.02  0.196E+00 -0.173E+06  0.198E+04  0.214E+02  0.689E+04  0.211E+11
     286.98  0.172E+00 -0.197E+06  0.171E+04  0.234E+02  0.712E+04  0.211E+11
     298.94  0.149E+00 -0.219E+06  0.142E+04  0.250E+02  0.733E+04  0.211E+11
     310.89  0.127E+00 -0.236E+06  0.112E+04  0.263E+02  0.750E+04  0.211E+11
     322.85  0.107E+00 -0.250E+06  0.796E+03  0.273E+02  0.763E+04  0.211E+11
     334.81  0.889E-01 -0.260E+06  0.466E+03  0.280E+02  0.772E+04  0.211E+11
     346.77  0.724E-01 -0.265E+06  0.129E+03  0.283E+02  0.778E+04  0.211E+11
     358.72  0.577E-01 -0.266E+06 -0.209E+03  0.282E+02  0.779E+04  0.211E+11
     NUMBER OF ITERATIONS IN LLP =    21


       * PILE GROUP *  5


 PILE TOP DISPLACEMENTS AND REACTIONS


       THE GLOBAL STRUCTURE COORDINATE SYSTEM
       --------------------------------------

 XDISPL,IN   YDISPL,IN   SLOPE   AXIAL,LBS  LAT,LBS  BM,LBS-IN
STRESS,LBS/IN**2

 0.343E-01  0.525E+00 0.321E-02-0.108E+06 0.282E+05 0.000E+00   0.518E+04


       THE LOCAL MEMBER COORDINATE SYSTEM
       ----------------------------------

 XDISPL,IN   YDISPL,IN   SLOPE   AXIAL,LBS  LAT,LBS  BM,LBS-IN
STRESS,LBS/IN**2

-0.163E+00  0.501E+00 0.321E-02-0.111E+06-0.140E+05 0.000E+00   0.518E+04
```

LATERALLY LOADED PILE

X	DEFLECTION	MOMENT	SHEAR	SOIL REACTION	TOTAL STRESS	FLEXURAL RIGIDITY
IN	IN	LBS-IN	LBS	LBS/IN	LBS/IN**2	LBS-IN**2
0.00	0.501E+00	0.000E+00	-0.124E+05	0.468E-03	0.518E+04	0.211E+11
14.44	0.547E+00	0.174E+06	-0.117E+05	0.482E-03	0.685E+04	0.211E+11
28.87	0.592E+00	0.327E+06	-0.102E+05	0.495E-03	0.832E+04	0.211E+11
43.31	0.633E+00	0.458E+06	-0.865E+04	0.506E-03	0.958E+04	0.211E+11
57.74	0.670E+00	0.568E+06	-0.714E+04	0.515E-03	0.106E+05	0.211E+11
72.18	0.701E+00	0.657E+06	-0.562E+04	0.523E-03	0.115E+05	0.211E+11
86.62	0.726E+00	0.724E+06	-0.410E+04	0.529E-03	0.121E+05	0.211E+11
101.05	0.744E+00	0.771E+06	-0.259E+04	0.534E-03	0.126E+05	0.211E+11
115.49	0.754E+00	0.796E+06	-0.107E+04	0.536E-03	0.128E+05	0.211E+11
129.93	0.756E+00	0.800E+06	0.443E+03	0.537E-03	0.129E+05	0.211E+11
144.36	0.750E+00	0.784E+06	0.196E+04	0.535E-03	0.127E+05	0.211E+11
158.80	0.737E+00	0.746E+06	0.347E+04	0.532E-03	0.123E+05	0.211E+11
173.23	0.716E+00	0.687E+06	0.499E+04	0.527E-03	0.118E+05	0.211E+11
187.67	0.689E+00	0.607E+06	0.651E+04	0.520E-03	0.110E+05	0.211E+11
202.11	0.655E+00	0.506E+06	0.802E+04	0.512E-03	0.100E+05	0.211E+11
216.54	0.617E+00	0.384E+06	0.871E+04	0.906E+01	0.886E+04	0.211E+11
230.98	0.575E+00	0.263E+06	0.811E+04	0.743E+02	0.771E+04	0.211E+11
245.41	0.530E+00	0.159E+06	0.689E+04	0.948E+02	0.671E+04	0.211E+11
259.85	0.483E+00	0.746E+05	0.603E+04	0.247E+02	0.590E+04	0.211E+11
274.29	0.436E+00	-0.466E+04	0.564E+04	0.287E+02	0.522E+04	0.211E+11
288.72	0.389E+00	-0.779E+05	0.520E+04	0.323E+02	0.593E+04	0.211E+11
303.16	0.343E+00	-0.145E+06	0.471E+04	0.354E+02	0.657E+04	0.211E+11
317.60	0.298E+00	-0.204E+06	0.418E+04	0.381E+02	0.714E+04	0.211E+11
332.03	0.255E+00	-0.256E+06	0.362E+04	0.403E+02	0.763E+04	0.211E+11
346.47	0.215E+00	-0.299E+06	0.302E+04	0.419E+02	0.805E+04	0.211E+11
360.90	0.177E+00	-0.334E+06	0.241E+04	0.430E+02	0.839E+04	0.211E+11
375.34	0.143E+00	-0.361E+06	0.179E+04	0.428E+02	0.864E+04	0.211E+11
389.78	0.112E+00	-0.379E+06	0.120E+04	0.395E+02	0.882E+04	0.211E+11
404.21	0.855E-01	-0.389E+06	0.652E+03	0.361E+02	0.891E+04	0.211E+11
418.65	0.625E-01	-0.392E+06	-0.916E+02	0.669E+02	0.894E+04	0.211E+11
433.09	0.434E-01	-0.382E+06	-0.102E+04	0.613E+02	0.884E+04	0.211E+11
447.52	0.280E-01	-0.359E+06	-0.185E+04	0.548E+02	0.863E+04	0.211E+11
461.96	0.161E-01	-0.325E+06	-0.259E+04	0.471E+02	0.830E+04	0.211E+11
476.39	0.749E-02	-0.282E+06	-0.320E+04	0.377E+02	0.789E+04	0.211E+11
490.83	0.162E-02	-0.231E+06	-0.364E+04	0.234E+02	0.740E+04	0.211E+11
505.27	-0.196E-02	-0.176E+06	-0.362E+04	-0.258E+02	0.687E+04	0.211E+11
519.70	-0.382E-02	-0.126E+06	-0.320E+04	-0.332E+02	0.639E+04	0.211E+11
534.14	-0.444E-02	-0.830E+05	-0.270E+04	-0.360E+02	0.598E+04	0.211E+11
548.57	-0.424E-02	-0.478E+05	-0.218E+04	-0.366E+02	0.564E+04	0.211E+11
563.01	-0.356E-02	-0.203E+05	-0.166E+04	-0.356E+02	0.537E+04	0.211E+11
577.45	-0.269E-02	-0.204E+03	-0.116E+04	-0.335E+02	0.518E+04	0.211E+11
591.88	-0.181E-02	0.129E+05	-0.697E+03	-0.303E+02	0.530E+04	0.211E+11
606.32	-0.107E-02	0.197E+05	-0.289E+03	-0.261E+02	0.537E+04	0.211E+11
620.76	-0.512E-03	0.211E+05	0.518E+02	-0.211E+02	0.538E+04	0.211E+11
635.19	-0.167E-03	0.181E+05	0.313E+03	-0.150E+02	0.535E+04	0.211E+11
649.63	-0.166E-06	0.120E+05	0.431E+03	-0.147E+01	0.529E+04	0.211E+11
664.06	0.478E-04	0.565E+04	0.366E+03	0.105E+02	0.523E+04	0.211E+11
678.50	0.401E-04	0.147E+04	0.216E+03	0.102E+02	0.519E+04	0.211E+11
692.94	0.178E-04	-0.582E+03	0.838E+02	0.808E+01	0.518E+04	0.211E+11
707.37	0.135E-05	-0.947E+03	-0.337E+00	0.357E+01	0.519E+04	0.211E+11
721.81	-0.579E-05	-0.569E+03	-0.233E+02	-0.393E+00	0.518E+04	0.211E+11

736.24	-0.733E-05	-0.274E+03	-0.168E+02	-0.506E+00	0.518E+04	0.211E+11
750.68	-0.616E-05	-0.841E+02	-0.100E+02	-0.433E+00	0.518E+04	0.211E+11
765.12	-0.416E-05	0.154E+02	-0.476E+01	-0.298E+00	0.518E+04	0.211E+11
779.55	-0.231E-05	0.528E+02	-0.139E+01	-0.168E+00	0.518E+04	0.211E+11
793.99	-0.982E-06	0.552E+02	0.352E+00	-0.729E-01	0.518E+04	0.211E+11
808.43	-0.199E-06	0.424E+02	0.987E+00	-0.150E-01	0.518E+04	0.211E+11
822.86	0.167E-06	0.265E+02	0.100E+01	0.128E-01	0.518E+04	0.211E+11
837.30	0.271E-06	0.134E+02	0.758E+00	0.211E-01	0.518E+04	0.211E+11
851.73	0.243E-06	0.465E+01	0.466E+00	0.193E-01	0.518E+04	0.211E+11
866.17	0.169E-06	-0.705E-01	0.229E+00	0.136E-01	0.518E+04	0.211E+11
880.61	0.957E-07	-0.195E+01	0.741E-01	0.785E-02	0.518E+04	0.211E+11
895.04	0.419E-07	-0.220E+01	-0.772E-02	0.349E-02	0.518E+04	0.211E+11
909.48	0.965E-08	-0.172E+01	-0.388E-01	0.816E-03	0.518E+04	0.211E+11
923.91	-0.565E-08	-0.107E+01	-0.412E-01	-0.485E-03	0.518E+04	0.211E+11
938.35	-0.104E-07	-0.526E+00	-0.311E-01	-0.906E-03	0.518E+04	0.211E+11
952.79	-0.995E-08	-0.172E+00	-0.182E-01	-0.879E-03	0.518E+04	0.211E+11
967.22	-0.781E-08	-0.128E-03	-0.683E-02	-0.700E-03	0.518E+04	0.211E+11
981.66	-0.567E-08	0.253E-01	-0.132E-02	-0.638E-04	0.518E+04	0.211E+11
996.10	-0.378E-08	0.374E-01	-0.528E-03	-0.454E-04	0.518E+04	0.211E+11
1010.53	-0.226E-08	0.401E-01	0.878E-05	-0.289E-04	0.518E+04	0.211E+11
1024.97	-0.113E-08	0.369E-01	0.328E-03	-0.154E-04	0.518E+04	0.211E+11
1039.40	-0.371E-09	0.305E-01	0.478E-03	-0.532E-05	0.518E+04	0.211E+11
1053.84	0.905E-10	0.230E-01	0.506E-03	0.137E-05	0.518E+04	0.211E+11
1068.28	0.326E-09	0.158E-01	0.459E-03	0.518E-05	0.518E+04	0.211E+11
1082.71	0.406E-09	0.966E-02	0.373E-03	0.676E-05	0.518E+04	0.211E+11
1097.15	0.390E-09	0.499E-02	0.275E-03	0.681E-05	0.518E+04	0.211E+11
1111.59	0.326E-09	0.173E-02	0.183E-03	0.593E-05	0.518E+04	0.211E+11
1126.02	0.244E-09	-0.279E-03	0.107E-03	0.463E-05	0.518E+04	0.211E+11
1140.46	0.165E-09	-0.133E-02	0.497E-04	0.326E-05	0.518E+04	0.211E+11
1154.89	0.992E-10	-0.170E-02	0.114E-04	0.204E-05	0.518E+04	0.211E+11
1169.33	0.501E-10	-0.164E-02	-0.110E-04	0.107E-05	0.518E+04	0.211E+11
1183.77	0.172E-10	-0.137E-02	-0.214E-04	0.380E-06	0.518E+04	0.211E+11
1198.20	-0.214E-11	-0.102E-02	-0.238E-04	-0.489E-07	0.518E+04	0.211E+11
1212.64	-0.114E-10	-0.680E-03	-0.215E-04	-0.270E-06	0.518E+04	0.211E+11
1227.07	-0.140E-10	-0.397E-03	-0.171E-04	-0.342E-06	0.518E+04	0.211E+11
1241.51	-0.127E-10	-0.186E-03	-0.123E-04	-0.320E-06	0.518E+04	0.211E+11
1255.95	-0.954E-11	-0.416E-04	-0.823E-05	-0.248E-06	0.518E+04	0.211E+11
1270.38	-0.597E-11	0.510E-04	-0.529E-05	-0.160E-06	0.518E+04	0.211E+11
1284.82	-0.291E-11	0.110E-03	-0.165E-05	-0.344E-06	0.518E+04	0.211E+11
1299.26	-0.936E-12	0.982E-04	0.163E-05	-0.112E-06	0.518E+04	0.211E+11
1313.69	0.709E-13	0.629E-04	0.238E-05	0.856E-08	0.518E+04	0.211E+11
1328.13	0.458E-12	0.294E-04	0.191E-05	0.559E-07	0.518E+04	0.211E+11
1342.56	0.556E-12	0.753E-05	0.102E-05	0.686E-07	0.518E+04	0.211E+11
1357.00	0.580E-12	0.000E+00	0.357E-22	0.722E-07	0.518E+04	0.211E+11

NUMBER OF ITERATIONS IN LLP = 16

Design Example #3

A cross section of the wall section used for Example 3 is shown in Figure 1, and is based on a wall constructed in New Orleans at Gainard Woods. The water level used in this example is elevation 17.0' and assumed to be a top of wall load case. The target factor of safety was chosen to be 1.5 in this example rather than the required 1.4 (for demonstration purposes) to provide a greater disparity from the without pile factor of safety. The water level on the protected side is assumed to be at the bottom of footing as the ground slopes toward a canal on the protected side. The soil information for this example is listed in Table 1.

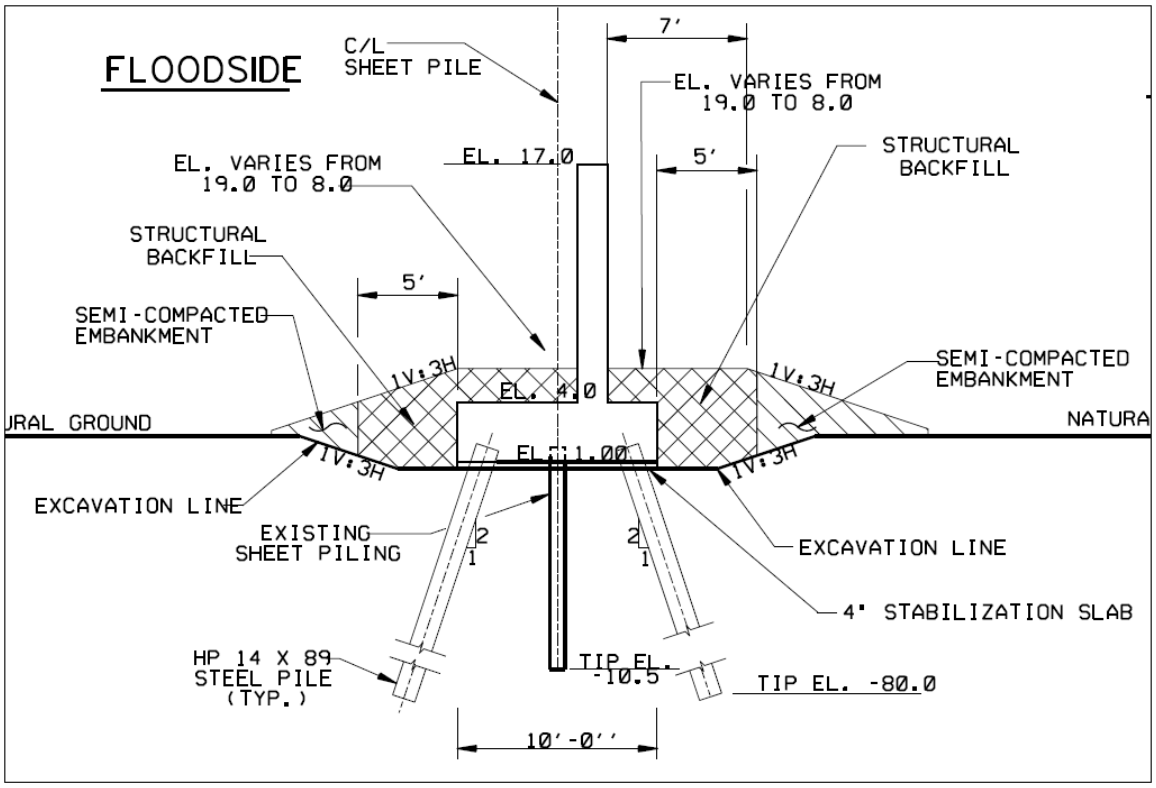

Figure 1. Wall Geometry.

Table 1. Soil Properties

Top of Layer Elevation, ft	Saturated Unit Weight, pcf	Undrained Shear Strength, psf	Friction Angle, Phi
4	108	400	0
2	86	300	0
-7	98	300	0
-10	100	300	0
-22	120	0	30
-27	100	320	0
-40	100	450	0
-45	100	450	0

Step 1 Initial Slope Stability Analysis

Perform a Spencer's method slope stability analysis to determine the critical slip surface with the water load only on the ground surface and no piles. UTexas4 was used in this example for all of the slope stability analysis. For the design example, the critical failure surface is shown in Figure 2 where the factor of safety is 1.34. Because this value is less than the required value of 1.5, the T-Wall will need to carry an unbalanced load in addition to any loads on the structure.

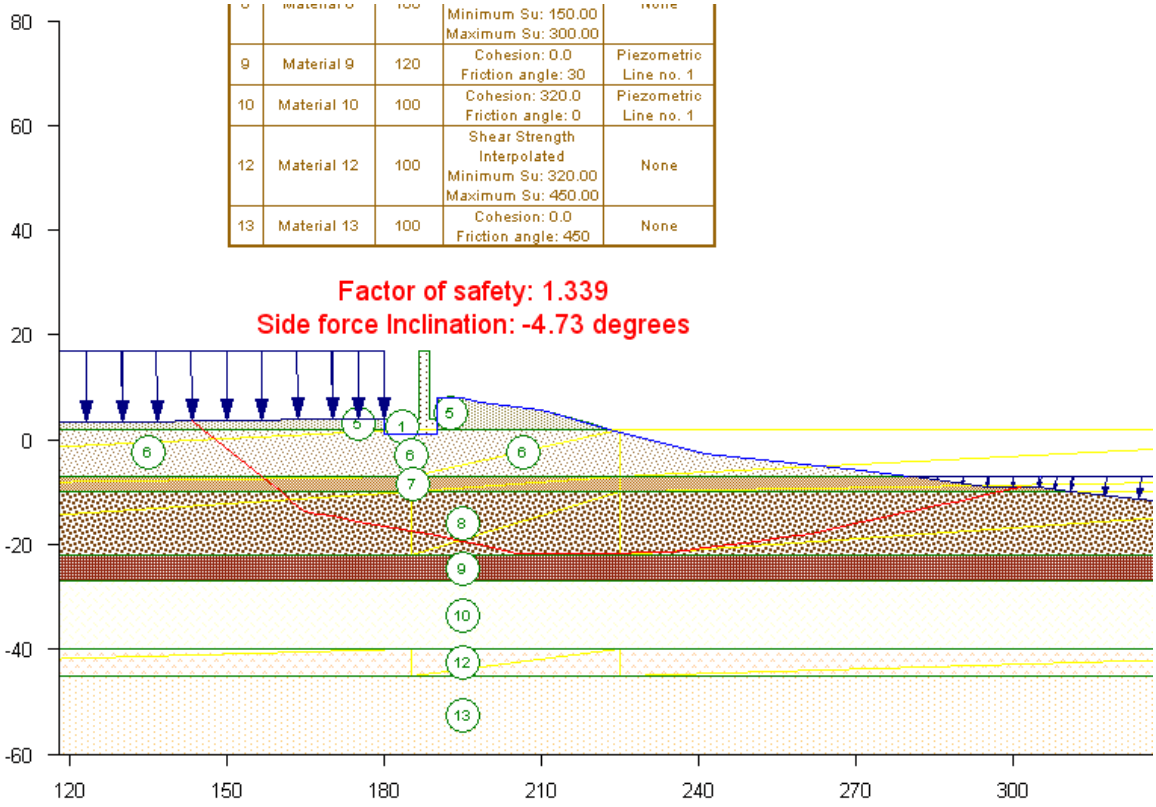

Figure 2. Spencer's analysis of the T-Wall without piles.

Step 2 Unbalanced Force Computations

Determine (unbalanced) forces required to provide the required global stability factor of safety. The critical failure surface extends down to elevation -22' in this example. The elevation of the ground surface at the heel of the T-Wall is at elevation 4'. It is assumed that the unbalanced load is halfway between these two elevations. Apply a line load at elevation -9', at the midpoint of the expected base width (for a non-circular failure surface). A line load of 3800 lb/ft at this location results in F=1.50. The target factor of safety is 1.5 so the computed unbalanced load is slightly too low in this example.

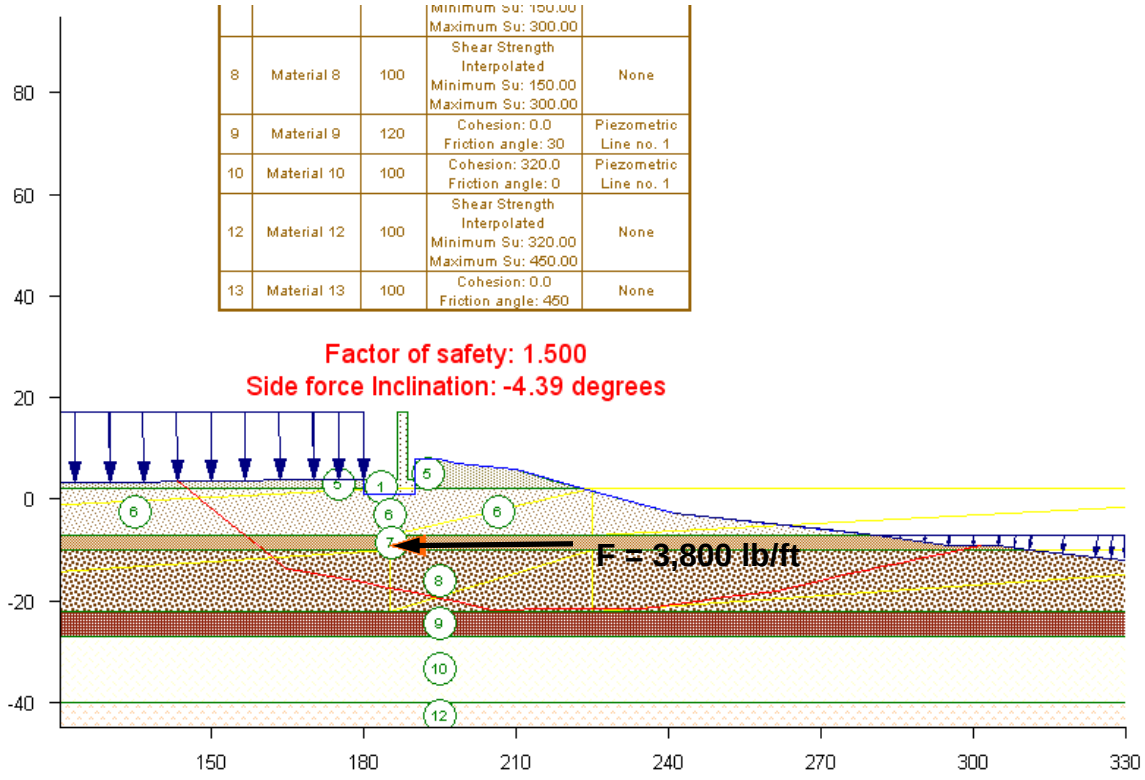

Figure 3. Spencer's analysis of the T-Wall with an unbalanced load to increase global stability (note FS is slightly below target FS=1.5 in this example).

It should be noted that a search for the critical failure surface was performed with the unbalanced load shown in Figure 3. The search ensures that if the pile foundation of the T-Wall can safely carry the unbalanced load in addition to any other loads on the structure, the global stability will meet the required factor of safety. The UTexas4 input files for Figures 2 and 3 are attached at the end of this example.

Step 3 Allowable Pile Capacity Analysis

3.1 For the preliminary analysis, allowable pile capacities determined by engineers in New Orleans District for the original design of this project are shown in Figure 4 for ultimate loads vs. depth. The solid line is for the Q case and the dashed line is for the S case. For water to the top of wall under hurricane surge loadings with fine grained soils, the Q case will be used. No axial capacity is accounted for above the lowest elevation of the critical surface in the graph. Since this is treated as a still water load case, the allowable load factor is 3.0.

From the figures below and knowing that maximum pile loads in compression will be about 65 kips, the required ultimate capacity is 65*3/2kips/ton = 98 tons. This would be a pile driven depth to about 100 feet from Figure 4. The tensile capacity is about the same.

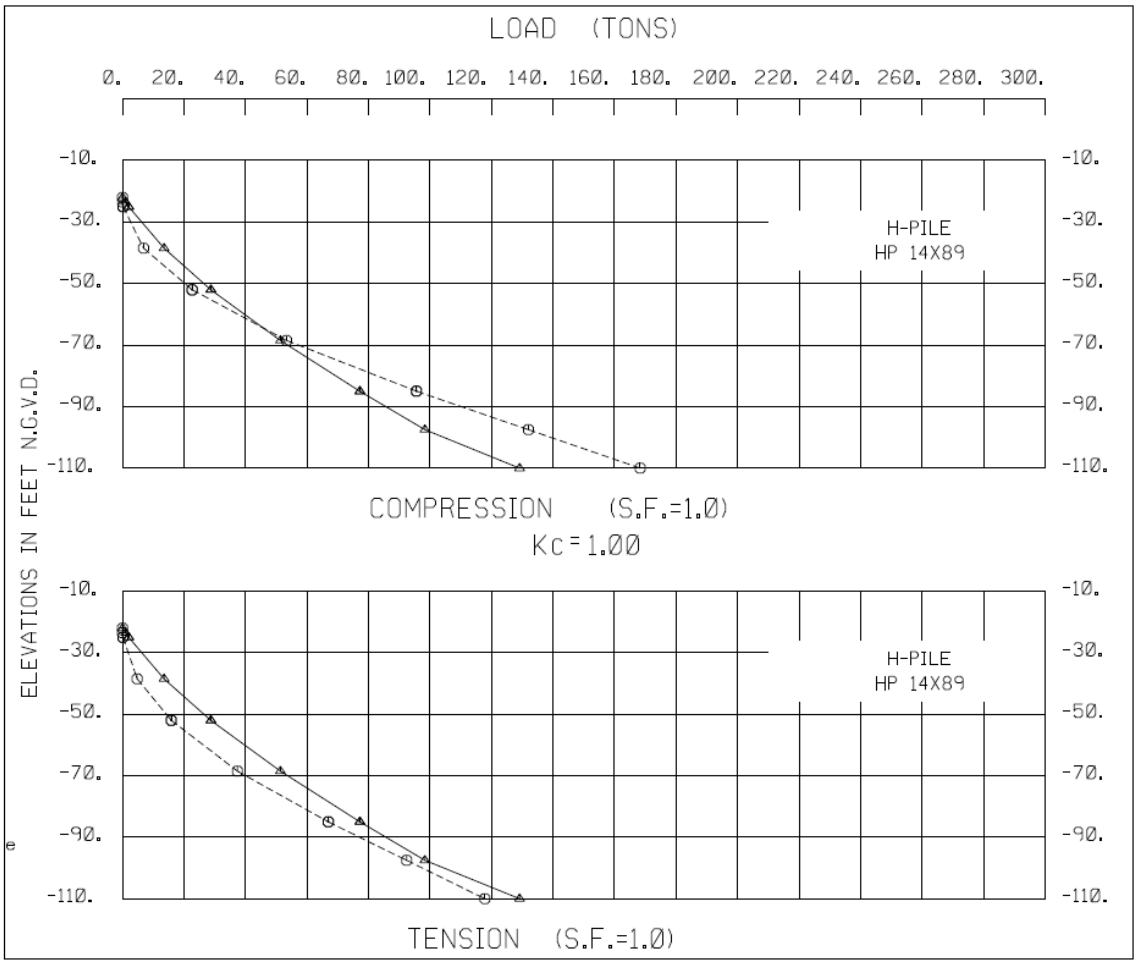

Figure 4. Ultimate Axial Capacity with Depth, Calculated

3.2 The allowable shear load (from LPILE or COM624G) is determined from pile head deflection versus lateral load plot. This was not determined for this problem.

Step 4 Initial T-wall and Pile Design

4.1 Use CPGA to analyze all load cases and perform a preliminary pile and T-wall design. The unbalanced force is converted to an "equivalent" force applied to the bottom of the T-wall, $F_{cap,}$ as calculated as shown below (See Figure 5):

$$F_{cap} = F_{ub}\left[\frac{\left(\frac{L_u}{2}+R\right)}{\left(L_p+R\right)}\right]$$

Where:

F_{ub} = unbalanced force computed in step 2.
L_u = distance from top of ground to lowest el. of critical failure surface (in)
L_p = distance from bottom of footing to lowest el. of crit. failure surface (in)

$$R = \sqrt[4]{\frac{EI}{Es}}$$

E = Modulus of Elasticity of Pile (lb/in^2)
I = Moment of Inertia of Pile (in^4)
Es = Modulus of Subgrade Reaction (lb/in^2) below critical failure surface. In New Orleans District this equates to the values listed as K_HB.

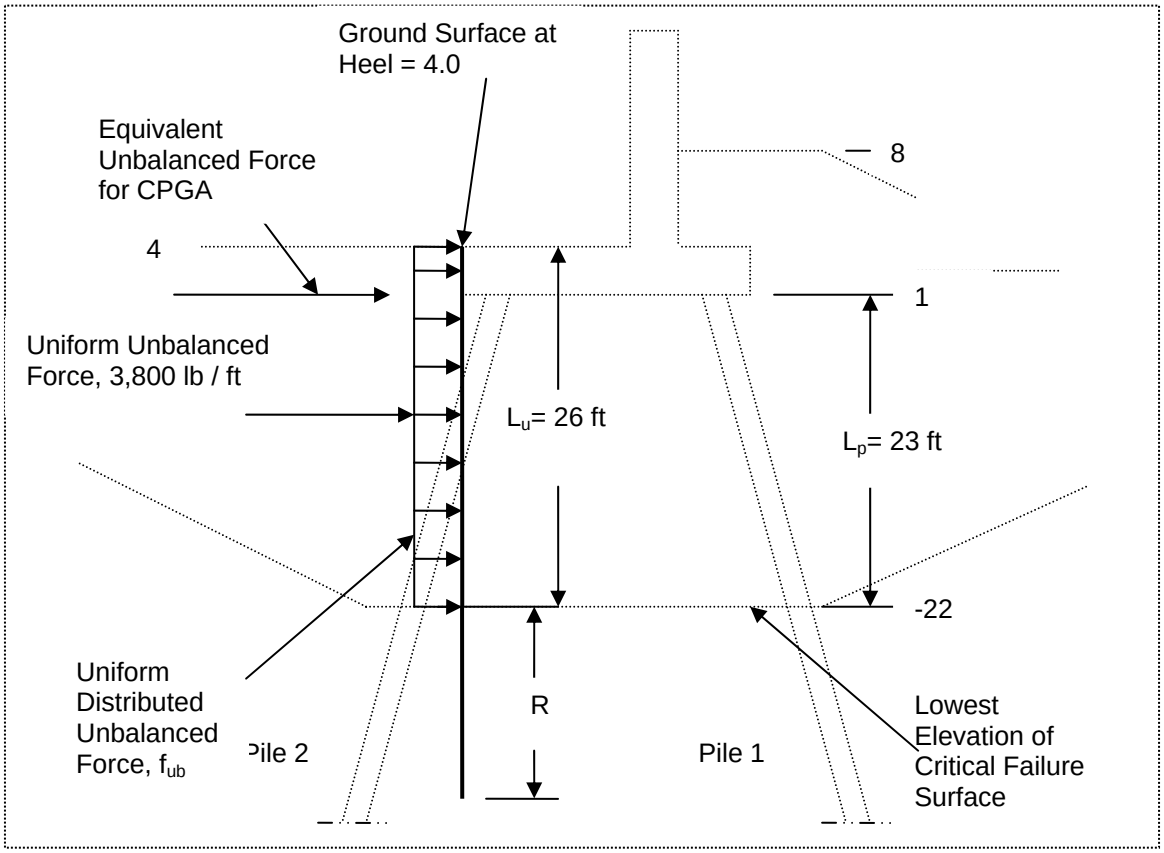

Figure 5. Equivalent Force Computation for Preliminary Design with CPGA

For the solution:
Piles = HP 14x89. I = 904 in^4, E = 29,000,000 psi

Soils – the stiffness, Es, below the failure surface is shown in Figure 6. Based on this a value of 120 psi is used.

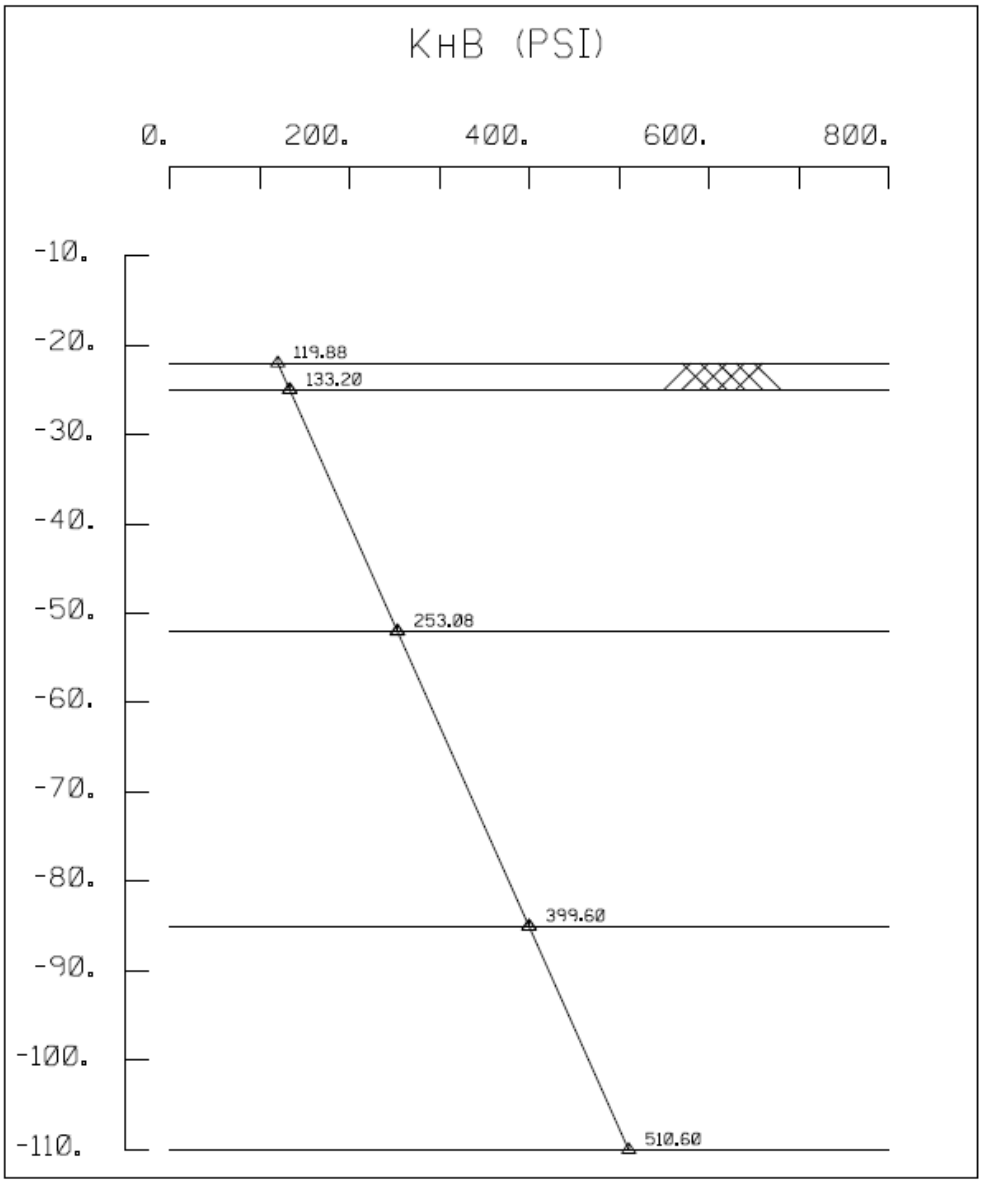

Figure 6. Soil Stiffness with Depth

R therefore is equal to 120 in = 10 feet

P_{cap} = 3800 * (26/2 + 10) / (23 + 10) = 2648 lb/ft

4.2 This unbalanced force is then analyzed with appropriate load cases in CPGA. Generally 8 to 20 load cases may be analyzed depending on expected load conditions. For this example, only the water at top of wall case is analyzed but both pervious and impervious foundation conditions are evaluated. See the spreadsheet calculations in Attachment 3 for the computation of the input for CPGA. The model is a 5 foot strip of the pile foundation.

For the CPGA analysis, the soil modulus, Es is adjusted based on the global stability factor of safety. For this example case, the factor of safety is 1.34. Es for CPGA is computed from the ratio of the computed factor of safety to the target factor of safety. At the bottom of the wall footing, the soil has a shear strength of about 300 psf. Es = 0.2222 Qu B. Therefore, Es = 0.2222(300)(14/12) = 78 psi = at the bottom of the wall footing. Computing Es based on reduction of factor of safety:

CPGA Es = (1.34-1.0) / (1.5 – 1.0) * 78 = 46 psi

4.3. Group reductions are according to EM 1110-2-2906. Since the pile spacing is greater than 8B in the direction of load and 2.5B parallel to the load, no reduction is necessary.

The CPGA output is shown in Attachment 4. A summary of results for the two load conditions analyzed are shown below:

```
          PILE FORCES IN LOCAL GEOMETRY

              M1 & M2 NOT AT PILE HEAD FOR PINNED PILES
              * INDICATES PILE FAILURE
              # INDICATES CBF BASED ON MOMENTS DUE TO
                          (F3*EMIN) FOR CONCRETE PILES
              B INDICATES BUCKLING CONTROLS


LOAD CASE -    1  Pervious Condition

 PILE    F1      F2      F3        M1        M2        M3   ALF  CBF
          K       K       K       IN-K      IN-K      IN-K

    1     3.7      .0    62.5         .0    -259.0       .0  .96  .25
    2    -4.1      .0   -13.7         .0     289.5       .0  .21  .13


 LOAD CASE -    2  Impervious Condition

 PILE    F1      F2      F3        M1        M2        M3   ALF  CBF
          K       K       K       IN-K      IN-K      IN-K

    1     2.4      .0    65.0         .0    -171.6       .0 1.00  .23
    2    -2.9      .0   -16.2         .0     202.1       .0  .25  .11
```

```
Where:
F1 =  Shear in pile at pile cap perpendicular to wall
F2 =  Shear in Pile at Pile Cap parallel to wall
F3 =  Axial Load in Pile
M1 =  Maximum moment in pile perpendicular to wall
M2 =  Maximum moment in pile parallel to wall
M3 =  Torsion in pile
ALF=  Axial load factor – computed axial load divided by allowable load
CBF=  Combined Bending factor – combined computed axial and bending
forces relative to allowable forces
```

The pile layout is adequate according to the CPGA analysis.

Computed deflections from the CPGA analysis are shown below:

```
          PILE CAP DISPLACEMENTS

 LOAD
 CASE        DX           DZ           R
             IN           IN         RAD

    1   -.7541E+00   -.2047E+00   -.5023E-02
    2   -.5370E+00   -.4687E-01   -.2391E-02
```

These deflections are a bit more than the allowable vertical deflection (DZ) of 0.5 inches and allowable horizontal deflection (DX) of 0.75 inches from the Hurricane and Storm Damage Reduction Design Guidelines.

4.4 Sheet pile design. Seepage design of the sheet pile is not performed for this example.

4.5 Check for resistance against flow through. Since the pile spacing is uniform, we will analyze one row of piles parallel with the loading rather than the entire monolith.

a. Compute the resistance of the flood side row of piles.

$$\sum P_{all} = \frac{n \sum P_{ult}}{1.5}$$

Where:

n = number of piles in the row within a monolith. Or, for monoliths with uniformly spaced pile rows, n = 1. Use 1 for this example

$P_{ult} = \beta(9 S_u b)$

S_u = soil shear strength

b = pile width = 14”

β = group reduction factor pile spacing parallel to the load - since the piles batter opposite to each other, there group affects are not computed.

For the soils under the slab, S_u = 300 psf

Therefore: P_{ult} = 9(300)(14/12) = 3,150 lb/ft

ΣP_{ult} = summation of P_{ult} over the height L_p, as defined in paragraph 4.1
For single layer soil is P_{ult} multiplied by L_p (23 ft) - That is the condition here since the shear strength is constant from the base to the critical failure surface.

ΣP_{ult} = 3,150(23) = 72,450 lb
ΣP_{all} = 1(72,450)/1.5 = 48,300 lb

b. Compute the load acting on the piles below the pile cap.

$$F_{up} = w f_{ub} L_p$$

Where:
w = Monolith width. Since we are looking at one row of piles in this example,
w = the pile spacing perpendicular to the unbalanced force (s_t) = 5 ft.

$$f_{ub} = \frac{F_{ub}}{L_u}$$

F_{ub} = Total unbalanced force per foot from Step 2 = 3,800 lb/ft
L_u = 26 ft
L_p = 23 ft

f_{ub} = 3,800/ 26 = 146 lb/ft/ft

F_p = 5(146)(23) = 3,358 lb

c. Check the capacity of the piles 50% of F_p = 3,358(0.50) = 1,679 lb

The capacity ΣP_{all} = 48,300 lb > 1,679 lb so OK for flow through with this check.

4.6 Second flow through check. Compute the ability of the soil to resist shear failure between the pile rows from the unbalanced force below the base of the T-wall, $f_{ub}L_p$, using the following equation:

$$f_{ub} L_p \le \frac{A_p S_u}{FS}\left[\frac{2}{(s_t - b)}\right]$$

Where:
A_pS_u = The area bounded by the bottom of the T-wall base, the critical failure surface, the upstream pile row and the downstream pile row multiplied by the shear strength of the soil within that area. – See Figure 7. S_u =300 psf
A_pS_u = (23(10+25.33)/2)(300 psf) = 122,000 lb
FS = Target factor of safety used in Steps 1 and 2. – 1.5
s_t= the spacing of the piles transverse (perpendicular) to the unbalanced force 5 ft
b = pile width – 14 inches

$f_{pb}L_p$ = (246 lb/ft)(23 ft) = 5,658 lb

$$\frac{A_p S_u}{FS}\left[\frac{2}{(s_t - b)}\right] = \frac{122{,}000}{1.5}\left[\frac{2}{5 - \left(\frac{14}{12}\right)}\right] = 42{,}434 \text{ lb}$$

Therefore, capacity against flow through is OK

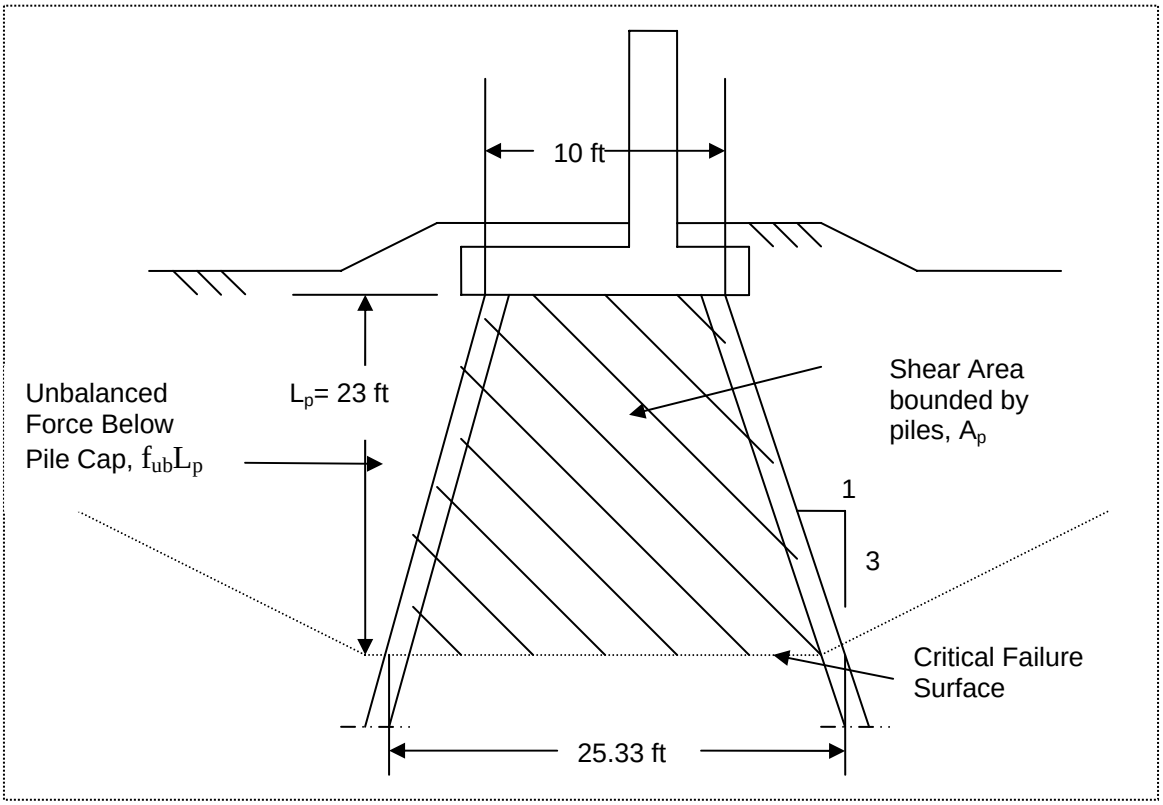

Figure 7. Shear Area for Flow Through Calculation

Step 5 Pile Group Analysis

5.1 A Group 7 analysis is performed using all loads applied to the T-wall structure. Critical load cases from step 4 would be used. In this example, only one load case with two foundation conditions was performed.

5.2 The loads applied in the Group 7 model include the distributed loads representing the unbalanced force that acts directly on the piles and also the water loads and self-weight of the wall that acts directly on the structure. In Group 7 these loads are resultant horizontal and vertical forces and the moments per width of spacing that act on the T-wall base (pile cap). They also include the unbalance force from the base of the cap to the top of soil, converted to a force and moment at the base of the structure. These forces are calculated using a worksheet or Excel spreadsheet and are shown at then end of the spreadsheets shown in Attachment 3. For this analysis the resultant forces per 5-ft of pile spacing were:

Pervious Foundation Condition

Vertical force	=	43,803 lb
Horizontal force	=	29,986 lb
Moment	=	-322,384 in-lbs

Impervious Foundation Condition

Vertical force	=	43,803 lb
Horizontal force	=	29,986 lb
Moment	=	-572,384 in-lbs

5.3 The unbalance load below the bottom of the footing is applied directly as distributed loads on the pile. Check if ($n\Sigma P_{ult}$) of the flood side pile row is greater than 50% F_p, (from 4.5)

.

$(n\Sigma P_{ult}) = 1\ (72{,}450\ lb) = 72{,}450\ lb$

50% F_p = 1,679 lb

Therefore distribute 50% of F_p onto each row of piles.

$0.5 f_{ub} s_t = 0.5\ (146\ lb/ft/ft)(5\ ft) = 365\ lb/ft = 31\ lb/in$

5.4 The Group 7 model is shown in Figure 8.

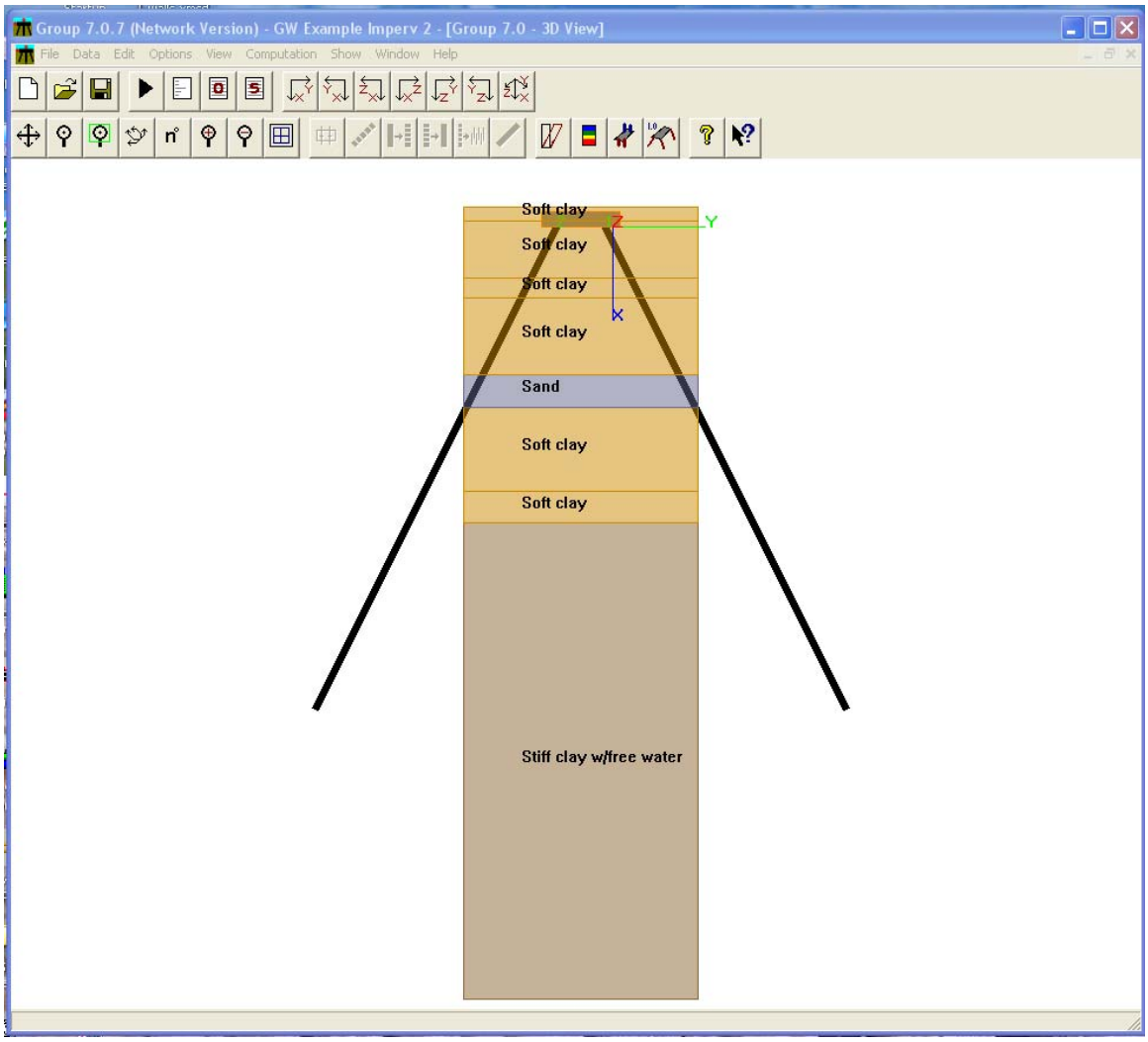

Figure 8. Group 7 Model

5.5 Additionally, in this analysis partial p-y springs can be used because the unreinforced factor of safety of 1.34 is between 1.0 and 1.5. The percentage of the full springs is determined as follows :

Partial spring percentage = (1.339 – 1.000)/ (1.5- 1.0) x 100% = 68%

Thus the strengths of in the top 4 layers, extending to Elevation -22 ft, were reduced to 68% of the undrained shear strength. The reduced undrained shear strength was used to scale the p-y curves above elevation -22 ft only. The results of the Group 7 analysis are listed in Table 1 where the pile responses for the full loading conditions on T-wall systems are listed. The complete Group 7 file for the Pervious Case is shown in Attachment 5.

Impervious Case	Left Pile (Pile #2)	Right Pile (Pile #1)
Axial Force (kips)	-14.5 (T)	62.5 (C)
Shear Force (kips)	1.3	1.5
Max. Moment (k-in)	64.4	118.3
Pervious Case	Left Pile (Pile #2)	Right Pile (Pile #1)
Axial Force (kips)	-14.5(T)	62.5 (C)
Shear Force (kips)	1.3	1.6
Max. Moment (k-in)	64	117.9

Illustration of the moment in the piles with depth is shown in Figure 9. The shear is shown in figure 10.

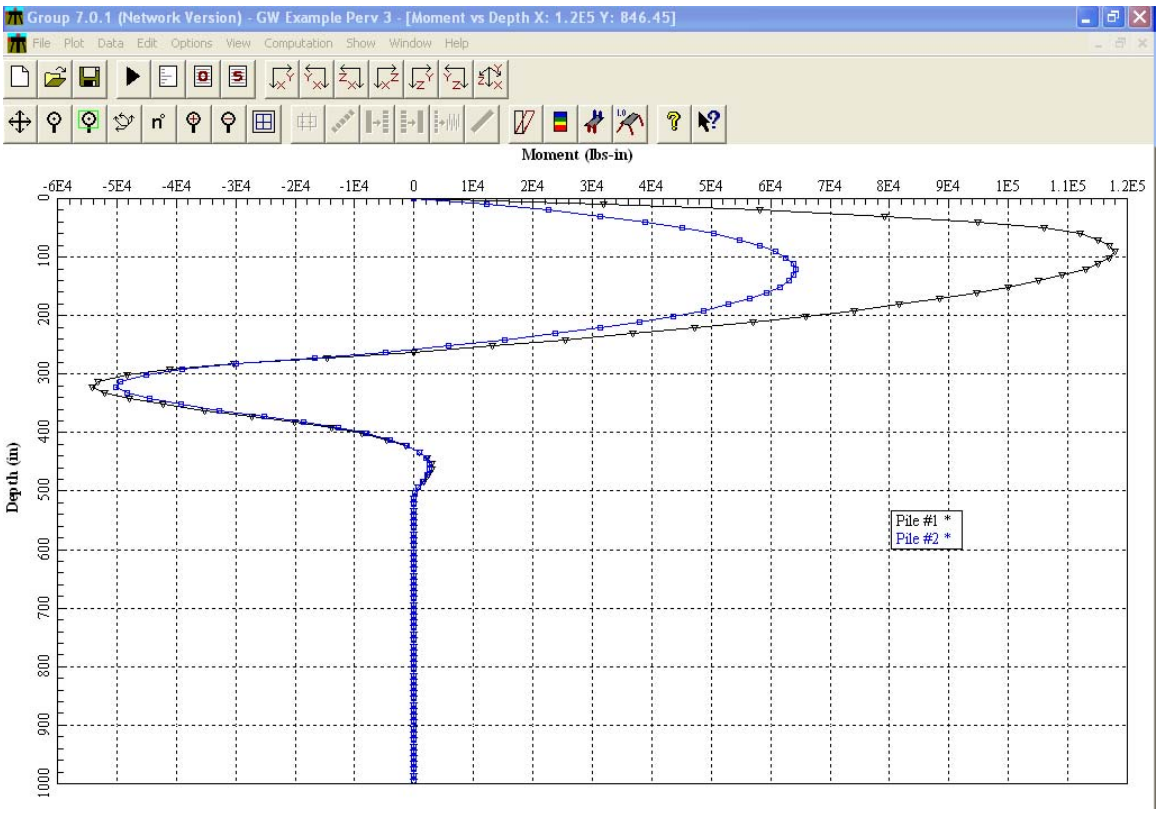

Figure 9. Moment in piles with depth for the pervious case

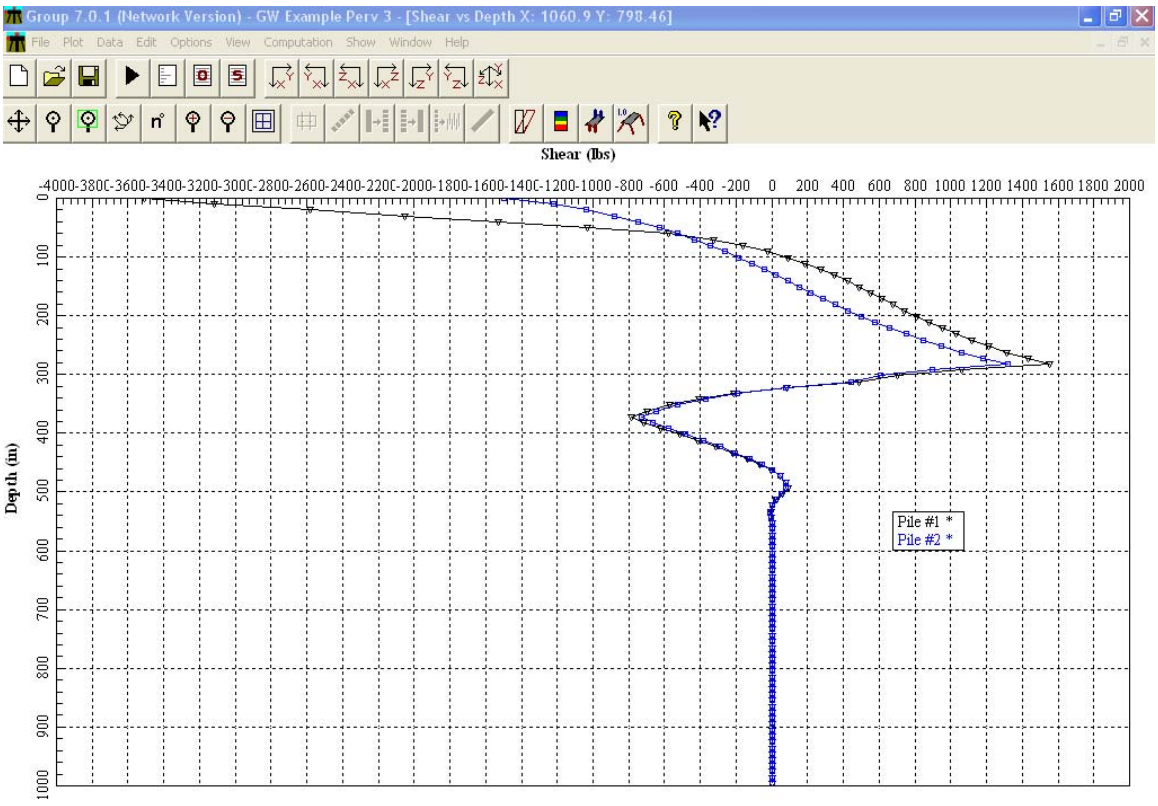

Figure 10. Shear versus depth for the pervious Case.

The axial force is found in the summary text from Group 7.

5.7 The axial forces and shear in Table 1 are then compared with allowable pile capacities determined in Step 3. The results of the comparison show that:

a. the axial compressive forces in the center pile, 62.5 kips, is less than the allowable capacity of 65 kips.
b. the axial tensile force from the left (flood side) pile of -14.5 kips is less than the allowable tensile load of 65 kips.
c. The shear forces in each of the three piles is much lower than the shear computed in examples 1 and 2. LPILE should be used to develop lateral capacity to verify its adequacy.

5.6 Moment and axial forces in the piles would also be checked for structural strength according to criteria in the Hurricane and Storm Damage Reduction System Design Guidelines and EM1110-2-2906.

Displacements from the Group 7 analysis are as follows:

```
PILE CAP DISPLACEMENTS
```

	VERTICAL,IN	HORIZONTAL,IN	ROTATION,RAD
Pervious	0.1129E+00	0.1042E-01	-0.1221E-02
Impervious	0.1129E+00	0.1042E-01	-0.1221E-02

These deflections are much less than the allowable vertical deflection (DZ) of 0.5 inches and allowable horizontal deflection (DX) of 0.75 inches from the Hurricane and Storm Damage Reduction Design Guidelines, even with out increases allowed for the top of wall load case. Figure 11 below shows displacement with depth.

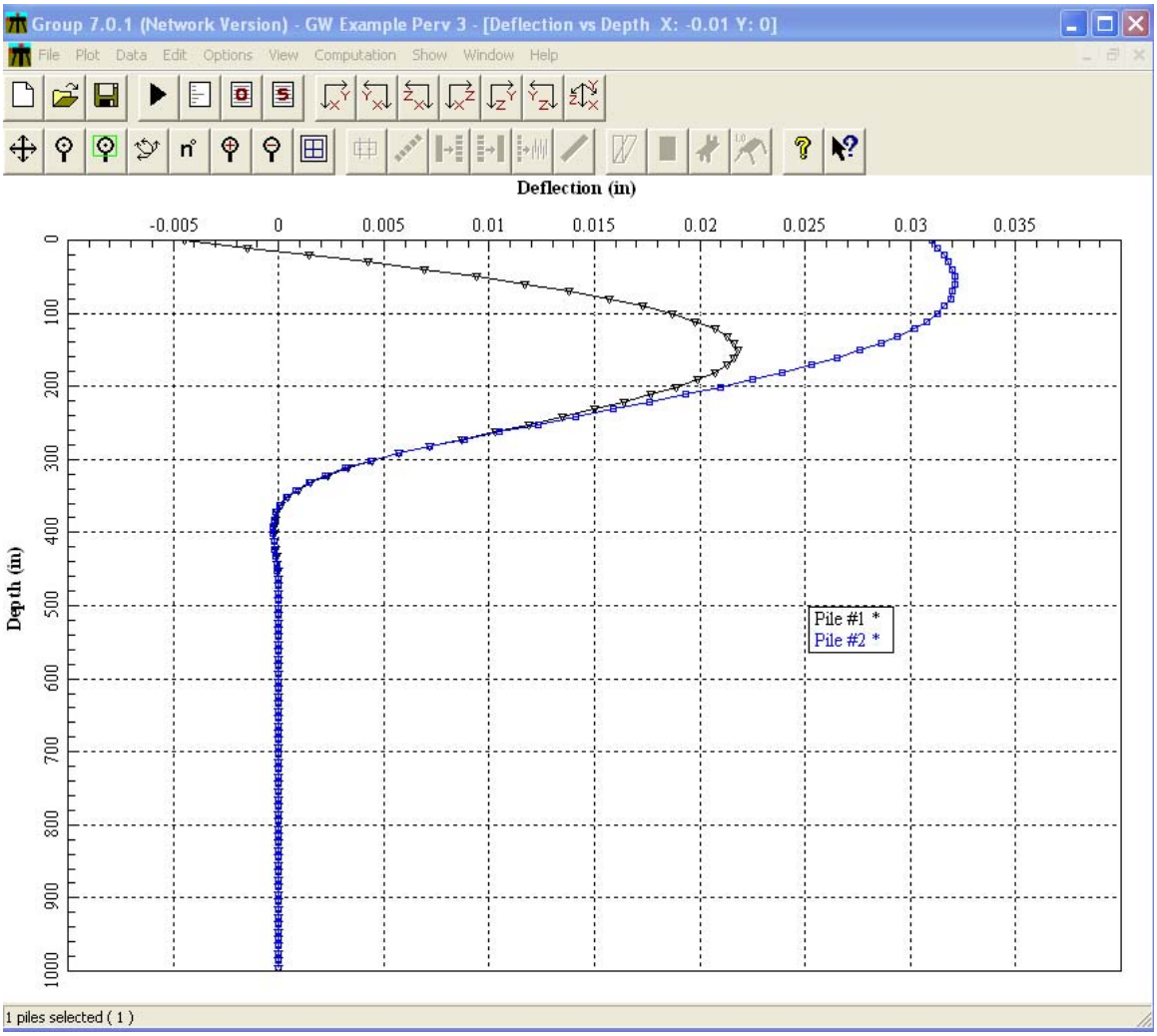

Figure 11. Deflection with Depth for the pervious foundation condition.

Step 6 Pile Group Analysis (unbalanced force)

6.1 Perform a Group 7 analysis with the unbalance force applied directly to the piles. The uniform unbalanced force above the base of the wall is added as a force and moment at the base of the wall. The distributed loads are statically equivalent to the unbalanced force of 3,800 lb/ft. No loads are applied to the cap except unbalance forces above the base of the wall equivalent to 2,192 lb lateral load and -43,803 lb-ft moment. The p-y springs are set to 0 to the critical failure surface by setting the ultimate shear stress of these soils at a very low value. The distributed loads were computed in the previous step and are shown in the Excel spreadsheet computations shown in Attachment 2. Results of the Group analysis are shown below:

Table2. Axial and shear Pile loads per 5-ft of width computed by Group 7 with unbalanced load distributed evenly on two piles

Impervious Case	Left Pile	Right Pile
Axial Force (kips)	-1.0 (T)	0.9 (C)
Shear Force (kips)	-13.2	-13.5

Step 7 Pile Reinforced Slope Stability Analysis

7.1 The UT4 pile reinforcement analysis using the slip surface from Step 5 is performed to determine if the target Factor of Safety of 1.5 is achieved. The piles are treated as reinforcements in the UT4 and the shear and axial forces from Step 6 are used to determine these forces. The forces in Table 2 must be converted to unit width conditions by dividing by the 5-ft pile spacing to be used as the axial and shear forces in the pile reinforcements in UT4. The results of the analysis are shown in Figure 12. The factor of safety is 1.574 which exceeds the target factor of safety of 1.5 . When the computed factor of safety exceeds the target, the global stability of the foundation is verified in this Step. The UTexas file used in this step is shown in attachment 5 of this example.

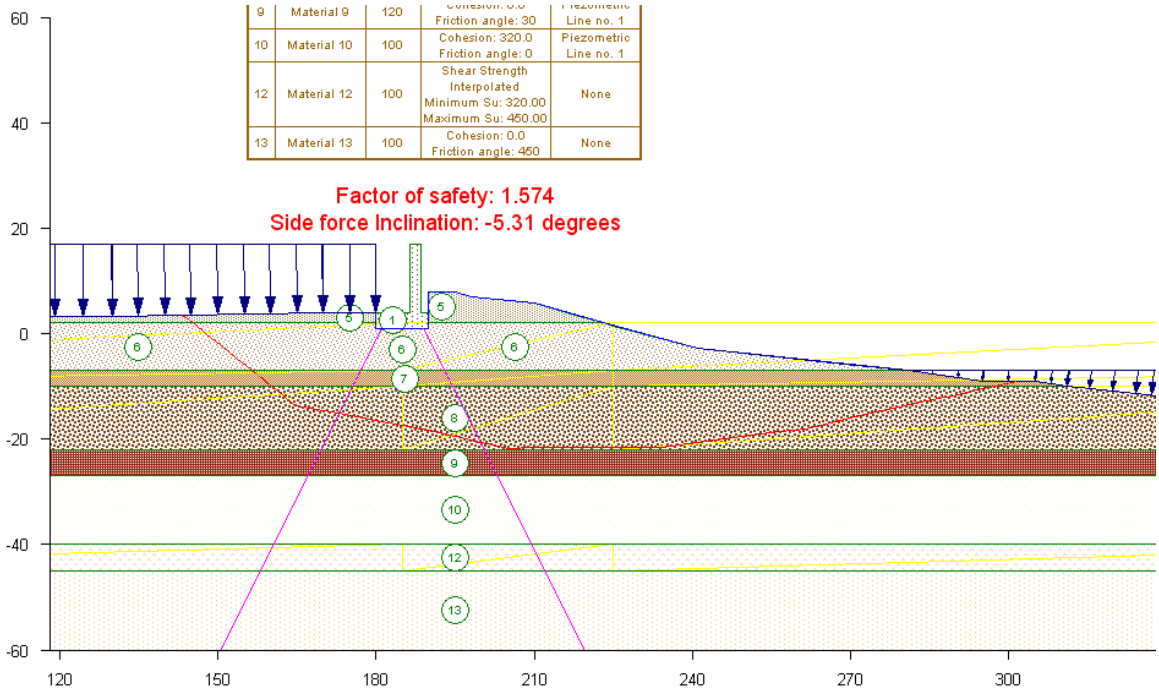

Figure 12. Factor of safety computed using pile forces from Group 7 analysis And critical failure surface from Step 2

Attachment 1 – UTexas analysis without piles that results in Figure 3.

```
HEADING
    T-wall Deep Seated Analysis
    Step 1 Analysis Without Piles

PROFILE LINES
         1    5 Profile 5
                 .00      3.30
              130.00      3.30
              170.00      4.00
              180.00      4.00

         3    1 T-wall
              180.00      4.00
              186.50      4.00
              186.51     17.00
              188.50     17.00
              188.51      4.00
              190.00      4.00

         2    5 Profile 5 PS
              190.00      8.00
              195.00      8.00
              198.00      7.00
              210.00      5.80
              216.20      4.00
              219.50      3.03
              219.60      3.00
              223.00      2.00

         6    6 Profile 6 - FS
                 .00      2.00
              180.00      2.00

         7    6 Profile 6 - Under Wall
              180.00      1.00
              190.00      1.00

         8    6 Profile 6 - PS
              190.00      2.00
              223.00      2.00
              225.00      1.47
              241.00     -2.80
              271.00     -6.00
              280.00     -6.90
              281.00     -7.00

         9    7 Profile 7
                 .00     -7.00
              281.00     -7.00
              295.00     -9.00
              305.00     -9.00
              311.00    -10.00
```

```
         10    8 Profile Line 8
                  .00    -10.00
               311.00    -10.00
               324.00    -11.37
               330.00    -12.00
               337.50    -11.50
               345.00    -11.00
               351.00    -10.50
               358.00     -9.30
               400.00     -9.30

         11    9 Profile Line 9
                  .00    -22.00
               400.00    -22.00

         12   10 Profile Line 10
                  .00    -27.00
               400.00    -27.00

         13   12 Profile Line 12
                  .00    -40.00
               400.00    -40.00

         14   13 Profile Line 13
                  .00    -45.00
               400.00    -45.00


MATERIAL PROPERTIES
     1 T-wall
          0.00 Unit Weight
          Very Strong
     5 Material 5
          108.00 Unit Weight
          Conventional Shear
              400.00       .00
          No Pore Pressure
     6 Material 6
          86.00 Unit Weight
          Interpolate Strengths
              150.00    300.00
          No Pore Pressure
     7 Material 7
          98.00 Unit Weight
          Interpolate Strengths
              150.00    300.00
          No Pore Pressure
     8 Material 8
          100.00 Unit Weight
          Interpolate Strengths
              150.00    300.00
          No Pore Pressure
     9 Material 9
          120.00 Unit Weight
          Conventional Shear
                 .00     30.00
          Piezometric Line
```

```
          1
     10 Material 10
          100.00 Unit Weight
          Conventional Shear
              320.00       .00
          Piezometric Line
          1
     12 Material 12
          100.00 Unit Weight
          Interpolate Strengths
              320.00    450.00
          No Pore Pressure
     13 Material 13
          100.00 Unit Weight
          Conventional Shear
                 .00    450.00
          No Pore Pressure

PIEZOMETRIC LINES
         1     62.40 Water Level
                 .00     17.00
               180.00     17.00
               180.00      1.00
               190.00      1.00
               190.00      8.00
               195.00      8.00
               198.00      7.00
               210.00      5.80
               223.00      2.00
               241.00     -2.80
               271.00     -6.00
               280.00     -6.90
               400.00     -6.90


DISTRIBUTED LOADS
      1
INTERPOLATION DATA
Su - Undrained Shear Strength
            .00      2.00    300.00         6
            .00     -7.00    300.00         6
         185.00      2.00    300.00         6
         185.00     -7.00    300.00         6
         225.00      2.00    150.00         6
         225.00     -7.00    150.00         6
         400.00      2.00    150.00         6
         400.00     -7.00    150.00         6
            .00      -7.00    300.00         7
            .00     -10.00    300.00         7
         185.00      -7.00    300.00         7
         185.00     -10.00    300.00         7
         225.00      -7.00    150.00         7
         225.00     -10.00    150.00         7
         400.00      -7.00    150.00         7
         400.00     -10.00    150.00         7
            .00      -40.00    320.00         12
            .00     -45.00    450.00         12
```

```
          185.00      -40.00    320.00         12
          185.00     -45.00    450.00         12
          225.00      -40.00    320.00         12
          225.00     -45.00    450.00         12
          400.00      -40.00    320.00         12
          400.00     -45.00    450.00         12
             .00      -10.00    300.00          8
             .00     -22.00    300.00         8
          185.00      -10.00    300.00          8
          185.00     -22.00    300.00         8
          225.00      -10.00    150.00          8
          225.00     -22.00    270.00         8
          400.00      -10.00    150.00          8
          400.00     -22.00    270.00         8


ANALYSIS/COMPUTATION
     Noncircular Search
          135.00       4.00
          150.00      -3.00
          166.00     -10.00
          190.00     -17.00
          205.00     -20.00
          234.00     -22.00
          262.00     -20.00
          281.00     -16.40
          302.00     -10.00
          312.80      -5.80

            2.00       0.50     50.00
SINgle-stage Computations
LONg-form output
SORt radii
CRItical
PROcedure for computation of Factor of Safety
SPENCER

GRAPH
COMPUTE
```

Attachment 2 – UTexas analysis with unbalanced load that results in Figure 4.

```
HEADING
    T-wall Deep Seated Analysis
    Step 2 Analysis With Unbalanced Load

PROFILE LINES
         1    5 Profile 5
                 .00      3.30
              130.00      3.30
              170.00      4.00
              180.00      4.00

         3    1 T-wall
              180.00      4.00
              186.50      4.00
              186.51     17.00
              188.50     17.00
              188.51      4.00
              190.00      4.00

         2    5 Profile 5 PS
              190.00      8.00
              195.00      8.00
              198.00      7.00
              210.00      5.80
              216.20      4.00
              219.50      3.03
              219.60      3.00
              223.00      2.00

         6    6 Profile 6 - FS
                 .00      2.00
              180.00      2.00

         7    6 Profile 6 - Under Wall
              180.00      1.00
              190.00      1.00

         8    6 Profile 6 - PS
              190.00      2.00
              223.00      2.00
              225.00      1.47
              241.00     -2.80
              271.00     -6.00
              281.00     -7.00

         9    7 Profile 7
                 .00     -7.00
              281.00     -7.00
              295.00     -9.00
              305.00     -9.00
              311.00    -10.00

        10    8 Profile Line 8
                 .00    -10.00
```

```
              311.00    -10.00
              324.00    -11.37
              330.00    -12.00
              337.50    -11.50
              345.00    -11.00
              351.00    -10.50
              358.00     -9.30
              400.00     -9.30

         11    9 Profile Line 9
                  .00    -22.00
              400.00    -22.00

         12   10 Profile Line 10
                  .00    -27.00
              400.00    -27.00

         13   12 Profile Line 12
                  .00    -40.00
              400.00    -40.00

         14   13 Profile Line 13
                  .00    -45.00
              400.00    -45.00


MATERIAL PROPERTIES
     1 T-wall
          0.00 Unit Weight
          Very Strong
     5 Material 5
          108.00 Unit Weight
          Conventional Shear
              400.00       .00
          No Pore Pressure
     6 Material 6
          86.00 Unit Weight
          Interpolate Strengths
              150.00    300.00
          No Pore Pressure
     7 Material 7
          98.00 Unit Weight
          Interpolate Strengths
              150.00    300.00
          No Pore Pressure
     8 Material 8
          100.00 Unit Weight
          Interpolate Strengths
              150.00    300.00
          No Pore Pressure
     9 Material 9
          120.00 Unit Weight
          Conventional Shear
                 .00     30.00
          Piezometric Line
          1
     10 Material 10
```

```
          100.00 Unit Weight
          Conventional Shear
              320.00       .00
          Piezometric Line
          1
     12 Material 12
          100.00 Unit Weight
          Interpolate Strengths
              320.00    450.00
          No Pore Pressure
     13 Material 13
          100.00 Unit Weight
          Conventional Shear
                 .00    450.00
          No Pore Pressure

PIEZOMETRIC LINES
         1     62.40 Water Level
                 .00     17.00
              180.00     17.00
              180.00      1.00
              190.00      1.00
              190.00      8.00
              195.00      8.00
              198.00      7.00
              210.00      5.80
              223.00      2.00
              241.00     -2.80
              281.00     -7.00
              400.00     -7.00


DISTRIBUTED LOADS
      1
LINE LOAD
   1 185.0 -9.0 -3800 0 1

INTERPOLATION DATA
Su - Undrained Shear Strength
            .00      2.00    300.00         6
            .00     -7.00    300.00         6
         185.00      2.00    300.00         6
         185.00     -7.00    300.00         6
         225.00      2.00    150.00         6
         225.00     -7.00    150.00         6
         400.00      2.00    150.00         6
         400.00     -7.00    150.00         6
            .00      -7.00    300.00         7
            .00     -10.00    300.00         7
         185.00      -7.00    300.00         7
         185.00     -10.00    300.00         7
         225.00      -7.00    150.00         7
         225.00     -10.00    150.00         7
         400.00      -7.00    150.00         7
         400.00     -10.00    150.00         7
            .00      -40.00    320.00         12
            .00     -45.00    450.00         12
```

```
          185.00      -40.00    320.00         12
          185.00     -45.00    450.00         12
          225.00      -40.00    320.00         12
          225.00     -45.00    450.00         12
          400.00      -40.00    320.00         12
          400.00     -45.00    450.00         12
             .00      -10.00    300.00          8
             .00     -22.00    300.00         8
          185.00      -10.00    300.00          8
          185.00     -22.00    300.00         8
          225.00      -10.00    150.00          8
          225.00     -22.00    270.00         8
          400.00      -10.00    150.00          8
          400.00     -22.00    270.00         8


ANALYSIS/COMPUTATION
     Noncircular  Search
          143.39      3.53
          150.64     -2.36
          164.69    -13.63
          189.61    -18.28
          205.04    -21.72
          234.03    -21.59
          261.62    -17.99
          280.42    -13.65
          301.55     -9.10
          301.65     -9.00

            2.00      0.50     50.00
SINgle-stage Computations
LONg-form output
SORt radii
CRItical
PROcedure for computation of Factor of Safety
SPENCER

GRAPH
COMPUTE
```

Attachment 3 Structural Loads for CPGA and Group Analyses

US Army Corps of Engineers	PROJECT TITLE:	COMPUTED BY:	DATE:	SHEET:	
Saint Paul Distict	T-Wall Design Example	KDH	07/03/07		
	SUBJECT TITLE:	CHECKED BY:	DATE:		
	Gainard Woods, Pervious				

Input for CPGA pile analysis

Upstream Water Elevation	*17*	ft	Back Fill Soil Elevation	*4*	ft
Downstream Water Elevation	*1*	ft	Front Fill Soil Elevation	*8*	ft
Wall Top Elevation	*17*	ft	Gamma Water	*0.0625*	kcf
Structure Bottom Elevation	*1*	ft	Gamma Concrete	*0.15*	kcf
Base Width	*10*	ft	Gamma Soil	*0.108*	kcf
Toe Width	*1.5*	ft	Distance to Backfill Break	*0.0*	ft
Wall Thickness	*1.5*	ft	Slope of Back Fill	*0.00*	
Base Thickness	*3*	ft	Soil Elevation at Heel	4.00	ft

Pervious Foundation Assumption

Vertical Forces

Component	Height	x1	x2	Gamma	Force	Arm	Moment	
Stem Concrete	13	7	8.5	0.15	2.93	7.75	22.7	
Heel Concrete	3	0	8.5	0.15	3.83	4.25	16.3	
Toe Concrete	3	8.5	10	0.15	0.68	9.25	6.2	
Heel Water	13	0	7	0.0625	5.69	3.5	19.9	
Toe Water	0	8.5	10	0.0625	0.00	9.25	0.0	
Heel Soil	0	0	7	0.108	0.00	3.5	0.0	
-Triangle	0.00	0	7.0	-0.046	0.00	2.33	0.0	
Toe Soil	4	8.5	10	0.108	0.65	9.25	6.0	
Rect Uplift	0	0	10	0.0625	0.00	5	0.0	
Tri Uplift	-16	0	10	0.0625	-5.00	3.3	-16.7	
Sum Vertical Forces					8.8		54.4	ft-k

Horizontal Forces

Component	H1	H2	Gamma	Lat. Coeff.	Force	Arm	Moment	
Driving Water	17	1	0.0625	1	8.00	5.33	42.67	
Resisting Water	1	1	0.0625	1	0.00	0.00	0.00	
Driving Soil	4	1	0.046	1	0.20	0.50	0.10	
Resisting Soil	8	1	0.108	1	-2.65	1.83	-4.85	
Sum Horizontal Forces					5.56	6.82	37.92	ft-k

Total Structural Forces	Net Vert. Force	Arm	Moment	
About Heel	8.76	10.54	92.32	ft-k

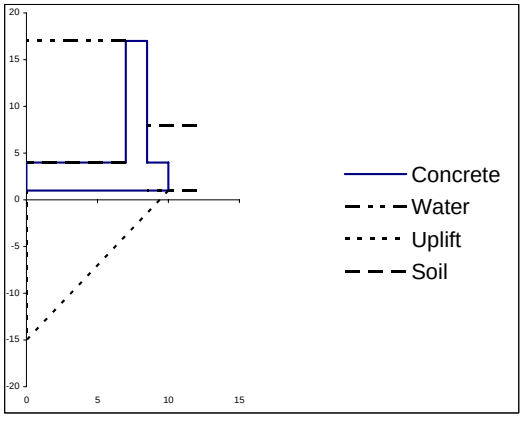

Net Vertical Arm		
From Toe	-0.54	ft

Moment About Toe
4.7 ft-k

Model Width
5 ft

Calculation of Unbalanced Force

Unbalanced Force. F_{ub}	*3,800*	lb/ft	From UTexas Analysis
Elevation of Critical Surface	*-22*	ft	From UTexas Analysis
Length - Ground to Crit. Surface, Lu	26.0	ft	(assume failure surface is normal to pile)
Length - Base to Crit. Surface, Lp	23	ft	
Pile Moment of Inertia. I	*904*	in^4	
Pile Modulus of Elasticity E	*29,000,000*	lb/in^2	
Soil Modulus of Subgrade Reaction, k	*120*	lb/in^2	
Soil Stiffness Parameter, R	122	in	$(EI / k)^{1/4}$
Equivalent Unbalanced Force	2,653	lb/ft	$F_{ub} * (L_u/2 +R) / (L_p +R)$

CPGA Input

PX	-41.06	kips
PY		
PZ	43.80	kips
MX	0	
MY	23.58	kip-ft
MZ	0	

Group Input

2 Pile Rows Parallel to Wall Face

Unbalanced Loading on Piles for Group Analysis

Total	61	lb/in	F_{ub} * Model Width /L_u
50%	30	lb/in	For Pile on Protected Sied
50%	30	lb/in	

Note: Applied to length of pile from bottom of cap to top of critical surface. 23

Unbalanced Loads on Wall for Group Analysis of Just Unbalanced Forces

Distance From Base to Ground Surface, Ds 3.00 ft

PX	0	lb	
PY	2,192	lb	F_{ub} * Model Width / L_u * Ds
PZ	0	lb	
MX	0		
MY	0		
MZ	-39,462	lb-in	-PZ * Ds/2

Total Loads for Group Analysis

PX	43,803	lb	
PY	29,986	lb	PYub + Sum Horizontal * Model Width
PZ	0	lb	
MX	0		
MY	0		
MZ	-322,384	lb-in	

US Army Corps of Engineers Saint Paul Distict	PROJECT TITLE: T-Wall Design Example	COMPUTED BY: KDH	DATE: 07/03/07	SHEET:	
	SUBJECT TITLE: Gainard Woods, Impervious	CHECKED BY:	DATE:		

Input for CPGA pile analysis

Upstream Water Elevation	*17*	ft
Downstream Water Elevation	*1*	ft
Wall Top Elevation	*17*	ft
Structure Bottom Elevation	*1*	ft
Base Width	*10*	ft
Toe Width	*1.5*	ft
Wall Thickness	*1.5*	ft
Base Thickness	*3*	ft

Impervious Foundation Assumption

Back Fill Soil Elevation	*4*	ft
Front Fill Soil Elevation	*8*	ft
Gamma Water	*0.0625*	kcf
Gamma Concrete	*0.15*	kcf
Gamma Soil	*0.108*	kcf
Distance to Backfill Break	*0.0*	ft
Slope of Back Fill	*0.00*	
Soil Elevation at Heel	4.00	ft

Vertical Forces

Component	Height	x1	x2	Gamma	Force	Arm	Moment	
Stem Concrete	13	7	8.5	0.15	2.93	7.75	22.7	
Heel Concrete	3	0	8.5	0.15	3.83	4.25	16.3	
Toe Concrete	3	8.5	10	0.15	0.68	9.25	6.2	
Heel Water	13	0	7	0.0625	5.69	3.5	19.9	
Toe Water	0	8.5	10	0.0625	0.00	9.25	0.0	
Heel Soil	0	0	7	0.108	0.00	3.5	0.0	
-Triangle	0.00	0	7.0	-0.046	0.00	2.33	0.0	
Toe Soil	4	8.5	10	0.108	0.65	9.25	6.0	
Prot. Side Uplift	0	*5*	10	0.0625	0.00	7.5	0.0	
Flood Side Uplift	-16	0	5	0.0625	-5.00	2.5	-12.5	
Sum Vertical Forces					8.8	kip	58.6	ft-k

Horizontal Forces

Component	H1	H2	Gamma	Lat. Coeff.	Force	Arm	Moment	
Driving Water	17	1	0.0625	1	8.00	5.33	42.67	
Resisting Water	1	1	0.0625	1	0.00	0.00	0.00	
Driving Soil	4	1	0.046	1	0.20	0.50	0.10	
Resisting Soil	8	1	0.108	1	-2.65	1.83	-4.85	
Sum Horizontal Forces					5.56	kip	37.92	ft-k

Total Structural Forces	Net Vert. Force	Arm	Moment	
About Heel	8.76	11.01	96.49	ft-k

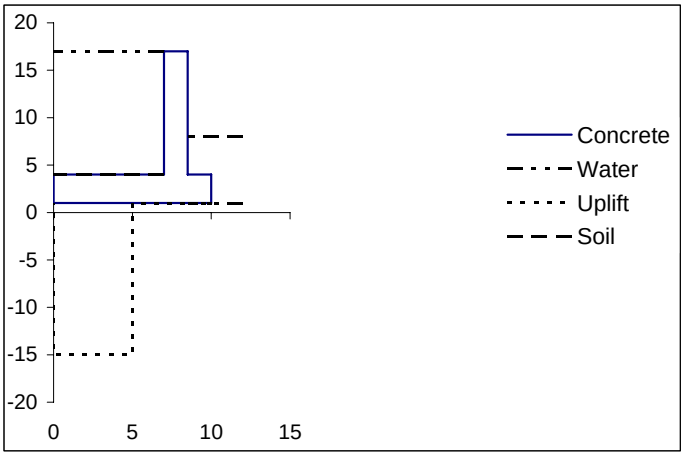

Net Vertical Arm		
From Toe	-1.01	ft

Moment About Toe
8.9 ft-k

Model Width
5 ft

Calculation of Unbalanced Force

Unbalanced Force. F_{ub}	*3,800*	lb/ft	From UTexas Analysis
Elevation of Critical Surface	*-22*	ft	From UTexas Analysis
Length - Ground to Crit. Surface, Lu	26	ft	(assume failure surface is normal to pile)
Length - Base to Crit. Surface, Lp	23	ft	
Pile Moment of Inertia. I	*904*	in^4	HP14x73
Pile Modulus of Elasticity E	*29,000,000*	lb/in^2	
Soil Modulus of Subgrade Reaction, k	*120*	lb/in^2	
Soil Stiffness Parameter, R	122	in	$(EI / k)^{1/4}$
Equivalent Unbalanced Force	2,653	lb/ft	$F_{ub} * (L_u/2 +R) / (L_p +R)$

CPGA Input

PX	-41.06	kips
PY		
PZ	43.80	kips
MX	0	
MY	44.41	kip-ft
MZ	0	

Group Input

2 Pile Rows Parallel to Wall Face

Unbalanced Loading on Piles for Group Analysis

Total	61	lb/in	F_{ub} * Model Width /L_u
50%	30	lb/in	For Pile on Protected Sied
50%	30	lb/in	

Note: Applied to length of pile from bottom of cap to top of critical surface. 23 ft

Unbalanced Loads on Wall for Group Analysis of Just Unbalanced Forces

Distance From Base to Ground Surface, Ds 3.00 ft

PX	0	lb	
PY	2,192	lb	F_{ub} * Model Width / L_u * Ds
PZ	0	lb	
MX	0		
MY	0		
MZ	-39,462	lb-in	-PZ * Ds/2

Total Loads for Group Analysis

PX	43,803	lb	
PY	29,986	lb	PYub + Sum Horizontal * Model Width
PZ	0	lb	
MX	0		
MY	0		
MZ	-572,384	lb-in	

Attachment 4 - Preliminary Analysis with CPGA

Input File

```
10 Gainard Woods T-wall, Example
15 3.0 ft slab, hp 14 x 89 piles, pinned head,
20 PROP 29000 326 904 26.1 0.5 0 all
30 SOIL ES 0.046 "TIP" 100 0 all
40 PIN all
50 ALLOW H 65.0 65.0 362.5  362.5  1108  3275 all
70 BATTER 2 1 2
80 ANGLE 180 1
180 PILE 1  1.2500 0.00 0.00
201 PILE 2  8.750 0.00 0.00
230 LOAD 1 -41.06  0.0  43.8  0.00  23.58
240 LOAD 2 -41.06  0.0  43.8  0.00  44.41
334 FOUT 1 2 3 4 5 6 7 GWex3.out
335 PFO ALL
```

Output

```
*********************************
 * CASE PROGRAM   #  X0080       *  CPGA - CASE PILE GROUP ANALYSIS PROGRAM
 * VERSION NUMBER # 1993/03/29   *  RUN DATE 27-JUL-2007   RUN TIME 12.58.29
 *********************************


 GAINARD WOODS T-WALL, EXAMPLE


 THERE ARE    2 PILES AND
              2 LOAD CASES IN THIS RUN.

 ALL PILE COORDINATES ARE CONTAINED WITHIN A BOX
                                      X          Y          Z
                                    -----      -----      -----
 WITH DIAGONAL COORDINATES = (      1.25 ,      .00 ,      .00 )
                             (      8.75 ,      .00 ,      .00 )


 ******************************************************************************

          PILE PROPERTIES AS INPUT


       E           I1           I2            A           C33          B66
     KSI         IN**4        IN**4         IN**2
   .29000E+05   .32600E+03   .90400E+03   .26100E+02   .50000E+00   .00000E+00

 THESE PILE PROPERTIES APPLY TO THE FOLLOWING PILES -

     ALL


 ******************************************************************************
```

SOIL DESCRIPTIONS AS INPUT

ES	ESOIL K/IN**2	LENGTH	L FT	LU FT
	.46000E-01	T	.10000E+03	.00000E+00

THIS SOIL DESCRIPTION APPLIES TO THE FOLLOWING PILES -

ALL

****

PILE GEOMETRY AS INPUT AND/OR GENERATED

NUM	X FT	Y FT	Z FT	BATTER	ANGLE	LENGTH FT	FIXITY
1	1.25	.00	.00	2.00	180.00	111.80	P
2	8.75	.00	.00	2.00	.00	111.80	P

						223.61	

****

APPLIED LOADS

LOAD CASE	PX K	PY K	PZ K	MX FT-K	MY FT-K	MZ FT-K
1	-41.1	.0	43.8	.0	23.6	.0
2	-41.1	.0	43.8	.0	44.4	.0

****

ORIGINAL PILE GROUP STIFFNESS MATRIX

.12087E+03	.49431E-05	.41211E-12	.00000E+00	-.99740E+04	.74146E-04
.49431E-05	.77891E+01	-.96883E-05	.00000E+00	.14533E-03	.46735E+03
.41211E-12	-.96883E-05	.45334E+03	.00000E+00	-.27200E+05	-.14533E-03
.00000E+00	.00000E+00	.00000E+00	.00000E+00	.00000E+00	.00000E+00
-.99740E+04	.14533E-03	-.27200E+05	.00000E+00	.25500E+07	.21799E-02
.74146E-04	.46735E+03	-.14533E-03	.00000E+00	.21799E-02	.43814E+05

S(4,4)=0. PROBLEM WILL BE TREATED AS TWO DIMENSIONAL IN THE X-Z PLANE.

LOAD CASE 1. NUMBER OF FAILURES = 0. NUMBER OF PILES IN TENSION = 1.

LOAD CASE 2. NUMBER OF FAILURES = 0. NUMBER OF PILES IN TENSION = 1.

****

PILE CAP DISPLACEMENTS

LOAD CASE	DX IN	DZ IN	R RAD
1	-.7541E+00	-.2047E+00	-.5023E-02
2	-.5370E+00	-.4687E-01	-.2391E-02

****

ELASTIC CENTER INFORMATION

ELASTIC CENTER IN PLANE X-Z	X FT	Z FT
	5.00	-6.88

LOAD CASE	MOMENT IN X-Z PLANE
1	.76399E+04
2	.30736E+05

****

PILE FORCES IN LOCAL GEOMETRY

M1 & M2 NOT AT PILE HEAD FOR PINNED PILES
* INDICATES PILE FAILURE
# INDICATES CBF BASED ON MOMENTS DUE TO (F3*EMIN) FOR CONCRETE PILES
B INDICATES BUCKLING CONTROLS

LOAD CASE - 1

PILE	F1 K	F2 K	F3 K	M1 IN-K	M2 IN-K	M3 IN-K	ALF	CBF
1	3.7	.0	62.5	.0	-259.0	.0	.96	.25
2	-4.1	.0	-13.7	.0	289.5	.0	.21	.13

LOAD CASE - 2

PILE	F1 K	F2 K	F3 K	M1 IN-K	M2 IN-K	M3 IN-K	ALF	CBF
1	2.4	.0	65.0	.0	-171.6	.0	1.00	.23
2	-2.9	.0	-16.2	.0	202.1	.0	.25	.11

****

PILE FORCES IN GLOBAL GEOMETRY

LOAD CASE - 1

PILE	PX K	PY K	PZ K	MX IN-K	MY IN-K	MZ IN-K
1	-31.2	.0	54.2	.0	.0	.0
2	-9.8	.0	-10.4	.0	.0	.0

LOAD CASE - 2

PILE	PX K	PY K	PZ K	MX IN-K	MY IN-K	MZ IN-K
1	-31.2	.0	57.0	.0	.0	.0
2	-9.8	.0	-13.2	.0	.0	.0

Attachment 5 – Group 7 Summary Output for Pervious Condition

```
================================================================================

                GROUP for Windows, Version 7.0.7

                  Analysis of A Group of Piles
               Subjected to Axial and Lateral Loading

                (c) Copyright ENSOFT, Inc., 1987-2006
                      All Rights Reserved

================================================================================


This program is licensed to:

k
c

Path to file locations:      C:\KDH\New Orleans\T-walls\Group\Adeles\
Name of input data file:     GW Example Perv 3.gpd
Name of output file:         GW Example Perv 3.gpo
Name of plot output file:    GW Example Perv 3.gpp
Name of runtime file:        GW Example Perv 3.gpr
Name of output summary file: GW Example Perv 3.gpt


--------------------------------------------------------------------------------
                           Time and Date of Analysis
--------------------------------------------------------------------------------

               Date:  July  9, 2007     Time:  16:21:51
 PILE GROUP ANALYSIS PROGRAM-GROUP
 PC VERSION 6.0 (C) COPYRIGHT ENSOFT,INC. 2000

 THE PROGRAM WAS COMPILED USING MICROSOFT FORTRAN
 POWERSTATION 4.0 (C) COPYRIGHT MICROSOFT CORPORATION, 1996.


     Gainard Woods:  F.S. 17.0, P.S. 1, Pervious


                *****     INPUT INFORMATION     *****



     * TABLE C *  LOAD AND CONTROL PARAMETERS


     UNITS--

          V LOAD,LBS     H LOAD,LBS    MOMENT,LBS-IN
```

```
     0.4380E+05     0.2999E+05    -0.5724E+06

  GROUP NO. 1

               DISTRIBUTED LOAD CURVE           2 POINTS

                         X,IN      LOAD,LBS/IN
                         0.00        0.310E+02
                       308.00        0.310E+02

  GROUP NO. 2

               DISTRIBUTED LOAD CURVE           2 POINTS

                         X,IN      LOAD,LBS/IN
                         0.00        0.310E+02
                       308.00        0.310E+02


* THE LOADING IS STATIC *


    KPYOP =  0     (CODE TO GENERATE P-Y CURVES)

    ( KPYOP = 1 IF P-Y YES; = 0 IF P-Y NO; = -1 IF P-Y ONLY )


* CONTROL PARAMETERS *
    TOLERANCE ON CONVERGENCE OF FOUNDATION REACTION      =  0.100E-04 IN
    TOLERANCE ON DETERMINATION OF DEFLECTIONS            =  0.100E-04 IN
    MAX NO OF ITERATIONS ALLOWED FOR FOUNDATION ANALYSIS =     100
    MAXIMUM NO. OF ITERATIONS ALLOWED FOR PILE ANALYSIS  =     100



* TABLE D *   ARRANGEMENT OF PILE GROUPS

  GROUP  CONNECT  NO OF PILE PILE NO  L-S CURVE  P-Y CURVE
    1      PIN         1        1         1          0
    2      PIN         1        1         1          0

  GROUP         VERT,IN     HOR,IN    SLOPE,IN/IN  GROUND,IN SPRING,LBS-IN


* TABLE E *   PILE GEOMETRY AND PROPERTIES
              PILE TYPE = 1 - DRIVEN PILE
                        = 2 - DRILLED SHAFT

  PILE  SEC  INC       LENGTH, IN     E  ,LBS/IN**2 PILE TYPE
    1    1   100       0.1006E+04     0.2900E+08        1

  PILE   FROM,IN      TO,IN      DIAM,IN   AREA,IN**2    I,IN**4
```

```
    1  0.0000E+00  0.1006E+04  0.1400E+02  0.2610E+02  0.9040E+03

      * THE PILE ABOVE IS OF LINEARLY ELASTIC MATERIAL *


* TABLE F *   AXIAL LOAD VS SETTLEMENT

(THE LOAD-SETTLEMENT CURVE OF SINGLE PILE IS GENERATED INTERNALLY)

  NUM OF CURVES  1

   CURVE  1          NUM OF POINTS = 19

       POINT       AXIAL LOAD,LBS      SETTLEMENT, IN
         1         -0.8554E+05         -0.2075E+01
         2         -0.8546E+05         -0.1075E+01
         3         -0.8542E+05         -0.5748E+00
         4         -0.8888E+05         -0.1784E+00
         5         -0.8583E+05         -0.1246E+00
         6         -0.2191E+05         -0.2768E-01
         7         -0.1092E+05         -0.1377E-01
         8         -0.2183E+04         -0.2753E-02
         9         -0.2183E+03         -0.2753E-03
        10          0.0000E+00          0.0000E+00
        11          0.2185E+03          0.2755E-03
        12          0.2185E+04          0.2755E-02
        13          0.1093E+05          0.1377E-01
        14          0.2193E+05          0.2769E-01
        15          0.8589E+05          0.1247E+00
        16          0.8897E+05          0.1785E+00
        17          0.8576E+05          0.5753E+00
        18          0.8595E+05          0.1075E+01
        19          0.8624E+05          0.2076E+01


* TABLE H *   SOIL DATA FOR AUTO P-Y CURVES


SOILS INFORMATION

     AT THE GROUND SURFACE          =     -36.00 IN

    8 LAYER(S) OF SOIL
    THE SOIL IS A SOFT CLAY
    X AT THE TOP OF THE LAYER        =     -36.00 IN
    X AT THE BOTTOM OF THE LAYER     =     -12.00 IN
    MODULUS OF SUBGRADE REACTION     =  0.300E+02 LBS/IN**3
    THE SOIL IS A SOFT CLAY
    X AT THE TOP OF THE LAYER        =     -12.00 IN
    X AT THE BOTTOM OF THE LAYER     =      96.00 IN
    MODULUS OF SUBGRADE REACTION     =  0.300E+02 LBS/IN**3
    THE SOIL IS A SOFT CLAY
    X AT THE TOP OF THE LAYER        =      96.00 IN
    X AT THE BOTTOM OF THE LAYER     =     132.00 IN
```

```
MODULUS OF SUBGRADE REACTION     =  0.300E+02 LBS/IN**3
THE SOIL IS A SOFT CLAY
X AT THE TOP OF THE LAYER        =     132.00 IN
X AT THE BOTTOM OF THE LAYER     =     276.00 IN
MODULUS OF SUBGRADE REACTION     =  0.300E+02 LBS/IN**3
THE SOIL IS A SAND
X AT THE TOP OF THE LAYER        =     276.00 IN
X AT THE BOTTOM OF THE LAYER     =     336.00 IN
MODULUS OF SUBGRADE REACTION     =  0.300E+02 LBS/IN**3
THE SOIL IS A SOFT CLAY
X AT THE TOP OF THE LAYER        =     336.00 IN
X AT THE BOTTOM OF THE LAYER     =     492.00 IN
MODULUS OF SUBGRADE REACTION     =  0.300E+02 LBS/IN**3
THE SOIL IS A SOFT CLAY
X AT THE TOP OF THE LAYER        =     492.00 IN
X AT THE BOTTOM OF THE LAYER     =     552.00 IN
MODULUS OF SUBGRADE REACTION     =  0.300E+02 LBS/IN**3
THE SOIL IS A STIFF CLAY BELOW THE WATER TABLE
X AT THE TOP OF THE LAYER        =     552.00 IN
X AT THE BOTTOM OF THE LAYER     =    1440.00 IN
MODULUS OF SUBGRADE REACTION     =  0.300E+02 LBS/IN**3


DISTRIBUTION OF EFFECTIVE UNIT WEIGHT WITH DEPTH
                  12 POINTS

            X,IN   WEIGHT,LBS/IN**3
        -36.0000     0.2600E-01
        -12.0000     0.2600E-01
        -12.0000     0.1400E-01
         96.0000     0.1400E-01
         96.0000     0.2000E-01
        132.0000     0.2000E-01
        132.0000     0.2200E-01
        276.0000     0.2200E-01
        276.0000     0.3300E-01
        336.0000     0.3300E-01
        336.0000     0.2200E-01
       1440.0000     0.2200E-01


DISTRIBUTION OF STRENGTH PARAMETERS WITH DEPTH
        16 POINTS

  X         C        PHI,DEGREES     E50       FMAX       TIPMAX
  IN     LBS/IN**2                            LBS/IN**2    LBS/IN**2
-36.00  0.1890E+01       0.000  0.2000E-01  0.1000E+00  0.0000E+00
-12.00  0.1890E+01       0.000  0.2000E-01  0.1000E+00  0.0000E+00
-12.00  0.1420E+01       0.000  0.2000E-01  0.1000E+00  0.0000E+00
 96.00  0.1420E+01       0.000  0.2000E-01  0.1000E+00  0.0000E+00
 96.00  0.1420E+01       0.000  0.2000E-01  0.1000E+00  0.0000E+00
132.00  0.1420E+01       0.000  0.2000E-01  0.1000E+00  0.0000E+00
132.00  0.1420E+01       0.000  0.2000E-01  0.1000E+00  0.0000E+00
276.00  0.1420E+01       0.000  0.2000E-01  0.1000E+00  0.0000E+00
276.00  0.0000E+00      30.000  0.0000E+00  0.1500E+01  0.0000E+00
336.00  0.0000E+00      30.000  0.0000E+00  0.1700E+01  0.0000E+00
336.00  0.2220E+01       0.000  0.2000E-01  0.2220E+01  0.0000E+00
```

```
 492.00  0.2220E+01       0.000  0.2000E-01  0.2220E+01  0.0000E+00
 492.00  0.3130E+01       0.000  0.2000E-01  0.3130E+01  0.0000E+00
 552.00  0.3130E+01       0.000  0.2000E-01  0.3130E+01  0.0000E+00
 552.00  0.3130E+01       0.000  0.2000E-01  0.3130E+01  0.0000E+00
1440.00  0.3130E+01       0.000  0.2000E-01  0.3130E+01  0.0000E+00

  REDUCTION FACTORS FOR CLOSELY-SPACED PILE GROUPS

       GROUP NO     P-FACTOR     Y-FACTOR

          1          1.00        1.00
          2          0.97        1.00


Gainard Woods:  F.S. 17.0, P.S. 1, Pervious


            *****     COMPUTATION RESULTS     *****


         VERT. LOAD, LBS   HORI. LOAD, LBS   MOMENT,IN-LBS

            0.4380E+05     0.2999E+05      -0.5724E+06


              DISPLACEMENT OF GROUPED PILE FOUNDATION

            VERTICAL,IN   HORIZONTAL,IN   ROTATION,RAD

            0.1133E+00     0.9562E-02      -0.1230E-02

        NUMBER OF ITERATIONS =   5


* TABLE I *   COMPUTATION ON INDIVIDUAL PILE

  * PILE GROUP *  1

PILE TOP DISPLACEMENTS AND REACTIONS

      THE GLOBAL STRUCTURE COORDINATE SYSTEM
      --------------------------------------

XDISPL,IN   YDISPL,IN   SLOPE   AXIAL,LBS  LAT,LBS  BM,LBS-IN  STRESS,LBS/IN**2

0.949E-01  0.956E-02 0.600E-03 0.575E+05 0.246E+05 0.000E+00   0.239E+04
```

THE LOCAL MEMBER COORDINATE SYSTEM

XDISPL,IN	YDISPL,IN	SLOPE	AXIAL,LBS	LAT,LBS	BM,LBS-IN	STRESS,LBS/IN**2
0.891E-01	-0.339E-01	0.600E-03	0.624E+05	-0.368E+04	0.000E+00	0.239E+04

* PILE GROUP * 2

PILE TOP DISPLACEMENTS AND REACTIONS

THE GLOBAL STRUCTURE COORDINATE SYSTEM

XDISPL,IN	YDISPL,IN	SLOPE	AXIAL,LBS	LAT,LBS	BM,LBS-IN	STRESS,LBS/IN**2
-0.158E-01	0.956E-02	0.211E-03	-0.137E+05	0.534E+04	0.000E+00	0.560E+03

THE LOCAL MEMBER COORDINATE SYSTEM

XDISPL,IN	YDISPL,IN	SLOPE	AXIAL,LBS	LAT,LBS	BM,LBS-IN	STRESS,LBS/IN**2
-0.184E-01	0.147E-02	0.211E-03	-0.146E+05	-0.134E+04	0.000E+00	0.560E+03

Attachment 6 – UTexas analysis with piles as reinforcement (Figure 12).

```
HEADING
    T-wall Deep Seated Analysis
    Step 7 Check with Group 7 Pile Forces

PROFILE LINES
         1    5 Profile 5
                 .00      3.30
              130.00      3.30
              170.00      4.00
              180.00      4.00

         3    1 T-wall
              180.00      4.00
              186.50      4.00
              186.51     17.00
              188.50     17.00
              188.51      4.00
              190.00      4.00

         2    5 Profile 5 PS
              190.00      8.00
              195.00      8.00
              198.00      7.00
              210.00      5.80
              216.20      4.00
              219.50      3.03
              219.60      3.00
              223.00      2.00

         6    6 Profile 6 - FS
                 .00      2.00
              180.00      2.00

         7    6 Profile 6 - Under Wall
              180.00      1.00
              190.00      1.00

         8    6 Profile 6 - PS
              190.00      2.00
              223.00      2.00
              225.00      1.47
              241.00     -2.80
              271.00     -6.00
              281.00     -7.00

         9    7 Profile 7
                 .00     -7.00
              281.00     -7.00
              295.00     -9.00
              305.00     -9.00
              311.00    -10.00

        10    8 Profile Line 8
                 .00    -10.00
```

```
              311.00    -10.00
              324.00    -11.37
              330.00    -12.00
              337.50    -11.50
              345.00    -11.00
              351.00    -10.50
              358.00     -9.30
              400.00     -9.30

         11    9 Profile Line 9
                  .00    -22.00
              400.00    -22.00

         12   10 Profile Line 10
                  .00    -27.00
              400.00    -27.00

         13   12 Profile Line 12
                  .00    -40.00
              400.00    -40.00

         14   13 Profile Line 13
                  .00    -45.00
              400.00    -45.00


MATERIAL PROPERTIES
     1 T-wall
          0.00 Unit Weight
          Very Strong
     5 Material 5
          108.00 Unit Weight
          Conventional Shear
              400.00       .00
          No Pore Pressure
     6 Material 6
          86.00 Unit Weight
          Interpolate Strengths
              150.00    300.00
          No Pore Pressure
     7 Material 7
          98.00 Unit Weight
          Interpolate Strengths
              150.00    300.00
          No Pore Pressure
     8 Material 8
          100.00 Unit Weight
          Interpolate Strengths
              150.00    300.00
          No Pore Pressure
     9 Material 9
          120.00 Unit Weight
          Conventional Shear
                  .00     30.00
          Piezometric Line
          1
     10 Material 10
```

```
          100.00 Unit Weight
          Conventional Shear
              320.00       .00
          Piezometric Line
          1
     12 Material 12
          100.00 Unit Weight
          Interpolate Strengths
              320.00    450.00
          No Pore Pressure
     13 Material 13
          100.00 Unit Weight
          Conventional Shear
                 .00    450.00
          No Pore Pressure

PIEZOMETRIC LINES
         1     62.40 Water Level
                 .00     17.00
              180.00     17.00
              180.00      1.00
              190.00      1.00
              190.00      8.00
              195.00      8.00
              198.00      7.00
              210.00      5.80
              223.00      2.00
              241.00     -2.80
              281.00     -7.00
              400.00     -7.00


DISTRIBUTED LOADS
      1
REINFORCEMENT LINES
      1        .00          2
140.50 -80.00  292.  2020.
181.00    1.00  292. 2020.

      2        .00          2
189.00    1.00 -78. 1840.
229.50 -80.00  -78. 1840.

      3        .00          2
5.00      1.00  0.  0.
5.00   -10.50   0.  0.

INTERPOLATION DATA
Su - Undrained Shear Strength
            .00      2.00    300.00         6
            .00     -7.00    300.00         6
         185.00      2.00    300.00         6
         185.00     -7.00    300.00         6
         225.00      2.00    150.00         6
         225.00     -7.00    150.00         6
         400.00      2.00    150.00         6
         400.00     -7.00    150.00         6
```

```
          .00      -7.00    300.00         7
          .00     -10.00    300.00         7
       185.00      -7.00    300.00         7
       185.00     -10.00    300.00         7
       225.00      -7.00    150.00         7
       225.00     -10.00    150.00         7
       400.00      -7.00    150.00         7
       400.00     -10.00    150.00         7
          .00      -40.00    320.00         12
          .00     -45.00    450.00        12
       185.00      -40.00    320.00         12
       185.00     -45.00    450.00        12
       225.00      -40.00    320.00         12
       225.00     -45.00    450.00        12
       400.00      -40.00    320.00         12
       400.00     -45.00    450.00        12
          .00      -10.00    300.00         8
          .00     -22.00    300.00        8
       185.00      -10.00    300.00         8
       185.00     -22.00    300.00        8
       225.00      -10.00    150.00         8
       225.00     -22.00    270.00        8
       400.00      -10.00    150.00         8
       400.00     -22.00    270.00        8


ANALYSIS/COMPUTATION
     Noncircular
          143.39      3.53
          150.64     -2.36
          164.69    -13.63
          189.61    -18.28
          205.04    -21.72
          234.03    -21.59
          261.62    -17.99
          280.42    -13.65
          301.55     -9.10
          301.65     -9.00

SINgle-stage Computations
LONg-form output
SORt radii
CRItical
PROcedure for computation of Factor of Safety
SPENCER

GRAPH
COMPUTE
```

Memorandum

To: Chris Behling
Shung Chiu
Kent Hokens
Mike Navin
Neil Schwanz

From: Mike McGuire
George Filz

Date: December 26, 2010

Subject: Interim Guidance, Revised "LPILE Method" to Calculate Bending Moments in Batter Piles for T-Walls Subject to Downdrag, Contract No. W912P8-07-D-0062

The purpose of this memorandum is to provide interim guidance for the revised LPILE Method for calculating bending moments induced by downdrag acting on batter piles that support T-Walls. The principal reason for the revision is to incorporate project-specific nonlinear settlement profiles throughout the LPILE method, instead of the linear variation of settlement that was applied in the LPILE analysis component of the step-by-step simplified procedure described in our draft report, which is dated 5 May 2010 and titled “LPILE Method for Evaluating Bending Moments in Batter Piles Due to Ground Settlement for Pile-Supported Floodwalls in New Orleans and Vicinity” (Contract No. W912P8-07-D-0062). The linear variation employed in the procedure in our draft report was simple to apply, but it embodied only the specific nonlinear settlement variations that occurred in the FLAC analyses that formed the basis of the procedure. The revised LPILE method described in this memorandum allows for project-specific nonlinear variation of settlement profiles.

In addition to allowing for project-specific nonlinear variation of settlement profiles, this interim guidance modifies and/or clarifies two other issues:

- The 5 May 2010 draft report allowed for a reduction in pile bending moment when T-walls supported by only two rows of batter piles are subject to asymmetric fill loads; whereas T-walls supported by three rows of piles and subject to asymmetric fill loads experienced an increase in pile bending moment. The apparent reduction occurred because the asymmetric fill loads were represented by pressures instead of soil zones in the FLAC analyses, and this allowed for displacement and "unbending" of the piles due to translation and rotation of the pile cap. Recent FLAC analyses with the T-wall embedded in levee fill indicate that the previously calculated reduction is unconservative, and that reduction has been removed from the procedure. Instead, the

recent FLAC analyses indicate that asymmetric fill loading produce similar increases in bending moment, whether the T-wall is embedded in levee fill or three rows of piles support the T-wall.

- For piles that do not extend to a sand bearing layer, the settlement profile should extend to the toe of the piles, not to the neutral plane, for purposes of calculating bending moment in the LPILE method. Although only two sets of FLAC analyses have been performed that compare piles with their toes in sand to piles with their toes in clay, both sets of analyses show a slight increase in bending moment for piles with their toes in clay. This outcome is better represented by extending the settlement profile to the toe of the piles than by decreasing the settlement profile to only the depth of the neutral plane.

This interim guidance is for T-walls with their pile caps embedded in soft clay. The final revised LPILE method will contain guidance for T-walls with their pile caps embedded in levee fill, but the details have not yet been developed for that case.

This memorandum describes the step-by-step procedure in the revised LPILE Method for T-walls embedded in soft clay. To apply the revised LPILE method, designers should have access to the 5 May 2010 draft report because some figures and tables from that document are referenced in this memorandum. Based on review comments, much of the notation used in the 5 May 2010 draft report has been revised to be easier to follow. Attachment A of this memorandum provides a table showing the correspondence between the previous and current sets of notation. Attachment B provides a sample calculation of soil movement to be applied in LPILE for Case 19 presented in Table 11 of the 5 May 2010 draft report. The procedures described in this memorandum will ultimately be incorporated in a revised report that presents the revised LPILE mehtod.

The assumptions listed in Table 1, which are reproduced from Table 15 in the 5 May 2010 draft report except as amended herein, apply to the revised LPILE Method, as do the limitations of the method provided in Section 6 of the 5 May 2010 draft report. Revisions to the assumptions of the method are shown in *italics* in Table 1, while redactions are shown in ~~strikethrough~~. It is worth reiterating that there are other sources contributing to the total bending moment in the batter piles, such as flood loading, and that the bending moments determined using the LPILE method described in this memorandum are only the moments due to downdrag.

Table 1: Assumptions used to develop a method for calculating downdrag-induced bending moments

Assumptions	
1	The foundation soils consist primarily of compressible clay ~~overlying~~ *which may include* a sand bearing layer, as shown in Figures 22 and 23 *of the 5 May 2010 draft report*. The model was developed considering a clay layer extending 84 ft below the ground surface at El -2, with batter piles extending from the bottom of the T-wall, which is at El -5, to El -91.
2	The piles are battered at 3H:1V, corresponding to a batter angle, β, of 18.4^o from vertical.
3	For symmetric embankment loading and for asymmetric loading resulting in more soil compression on the flood side of the T-Wall, the down-drag induced bending moment in the flood-side pile is considered to be critical.
4	For asymmetric loading resulting in more soil compression on the protected side, the bending moment in the protected-side pile is considered to be critical. Reductions of bending moment in the protected-side pile due to asymmetry of the T-Wall stem and middle batter pile are ignored.
5	For T-Walls located within an embankment, as shown to Figure 23 *of the 5 May 2010 draft report*, the compression of the embankment material is considered to be insignificant compared to the compression of the underlying soft clay.
6	The clay is slightly overconsolidated near the ground surface but is otherwise normally consolidated.
7	The connection of the piles to the T-Wall has little moment resistance and can be reasonably approximated by a pin support.
8	Axial loading in the pile does not significantly impact the downdrag-induced bending moments, i.e., the P-Δ effect is not included in this method.
9	Soil movement normal to the pile axis is responsible for the downdrag-induced bending moments.
10	Soil compressions s_{FS} and s_{PS} (defined in Step 1) are less than ~~36~~ *43* inches

Revised Step-by-Step Procedure (replaces Section 4.2 of the 5 May 2010 draft report)

1. Calculate the compression profile of the soil due to the embankment surcharge using ordinary geotechnical analysis procedures, without considering the stiffening effect of the batter piles. The compression profile should be evaluated over the vertical interval extending from the elevation of the base of the T-Wall to the elevation of the top of the bearing layer or to the pile tip elevation for profiles lacking a distinct bearing layer. Thus, the height of the vertical interval is equal to $L_c \cos(\beta)$, where L_c is the length of the batter pile from the base of the T-wall to the top of the bearing layer or the length of the batter pile from the base of the T-wall to the pile tip elevation for profiles lacking a

distinct bearing layer, and β is the batter angle from vertical. The soil compression calculations should be performed along two vertical profiles, which are located at the plan view positions on the flood side and protected side at distances equal to $0.25(L_c)\sin(\beta)$ from the location where the outer flood-side and protected-side battered piles intersect the T-Wall base. Note that these soil compressions are calculated along vertical profiles at the $0.25(L_c)\sin(\beta)$ locations, not along the alignment of the batter piles. The total compression calculated on the flood side, s_{FS}, should be compared to the total compression on the protected side, s_{PS}, and the maximum settlement and differential settlement determined according to $s_{max} = \max\{s_{FS}, s_{PS}\}$ and $\Delta s = |s_{FS} - s_{PS}|$. The weight of the T-wall and the fill directly overlying the T-wall base is not included in the settlement calculations.

2. For the plan view location that produces the maximum settlement, s_{max}, develop a normalized compression profile over the vertical interval of height $L_c\cos(\beta)$, extending from the elevation of the base of the T-Wall to the elevation of top of the bearing layer or to the pile tip elevation for profiles lacking a distinct bearing layer. The normalized compression profile is used to determine the distribution of the soil movements applied in LPILE. An example of a normalized compression profile is shown below in Figure 1.

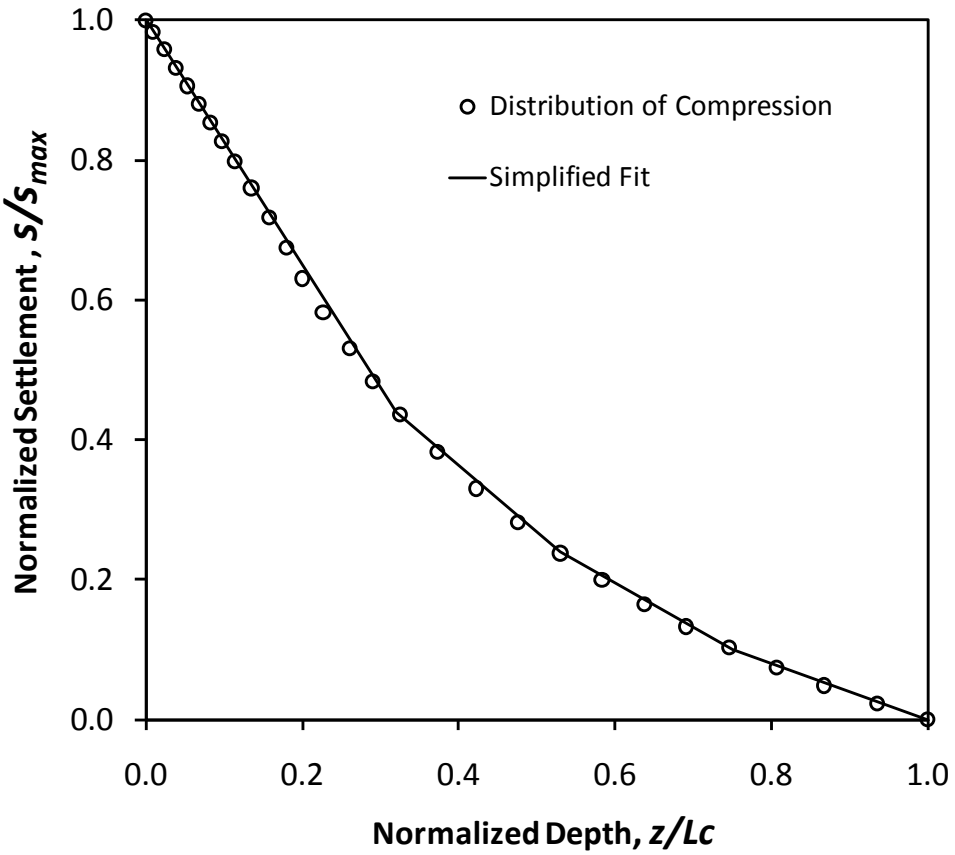

Figure 1: Sample normalized compression profile

The normalized compression profile shown in Figure 1 was generated by dividing the settlement calculated in Step 1 for the critical side of the floodwall at a particular depth, s, by the maximum settlement, s_{max}, calculated over the entire vertical interval defined by $L_c \cos(\beta)$. The normalized settlement, s/s_{max}, is plotted against the normalized depth within the compressible clay layer, $z \cos(\beta)/L_c \cos(\beta) = z/L_c$. A simplified fit can be applied to the normalized distribution of compression, as shown in Figure 1, to reduce the data entry required to specify soil movements in LPILE.

3. Calculate the vertical soil movement at the top of the pile, $d_{V,0}$, to be applied at the top of the pile in LPILE using Figure 2 and the value of s_{max} determined in Step 1 to account for the stiffening effect of the piles on soil compression. Not that the plot and equation in Figure 2 are only applicable over the s_{max} range from 0 to 43 in.

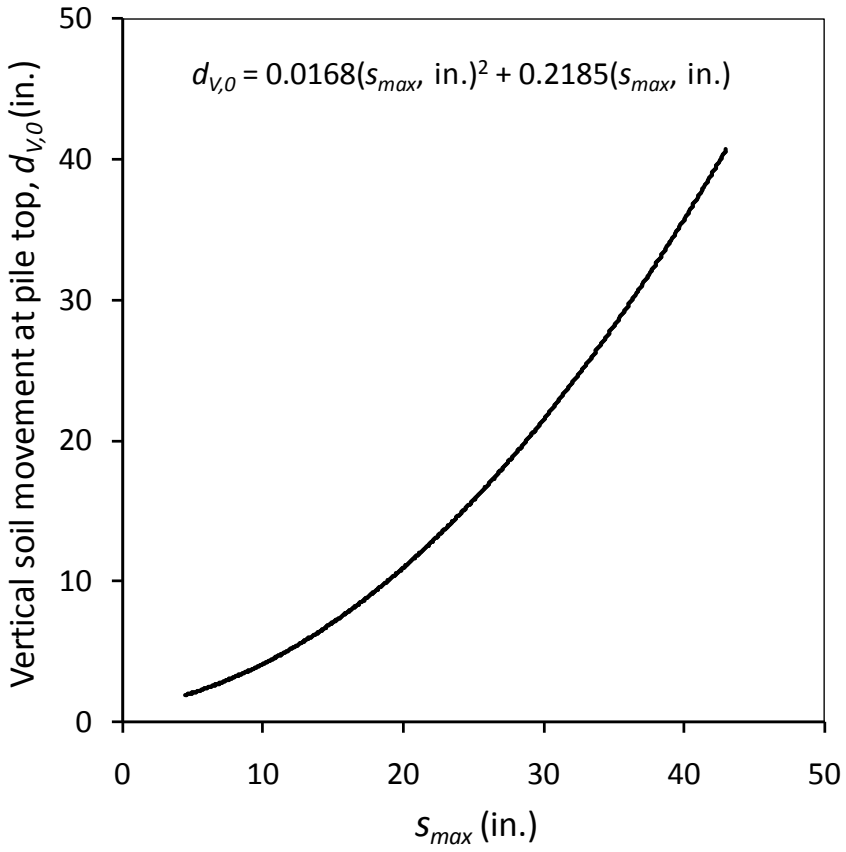

Figure 2: Vertical soil movement applied at the top of the pile versus the greater calculated soil compression

4. For asymmetric embankment loading, determine the horizontal soil movement, $d_{H,0}$, to be considered at the top of the pile in the LPILE analysis using Figure 3 with the value of Δs determined in Step 1. Not that the plot and equation in Figure 3 are only applicable over the Δs range from 0 to 21 in.

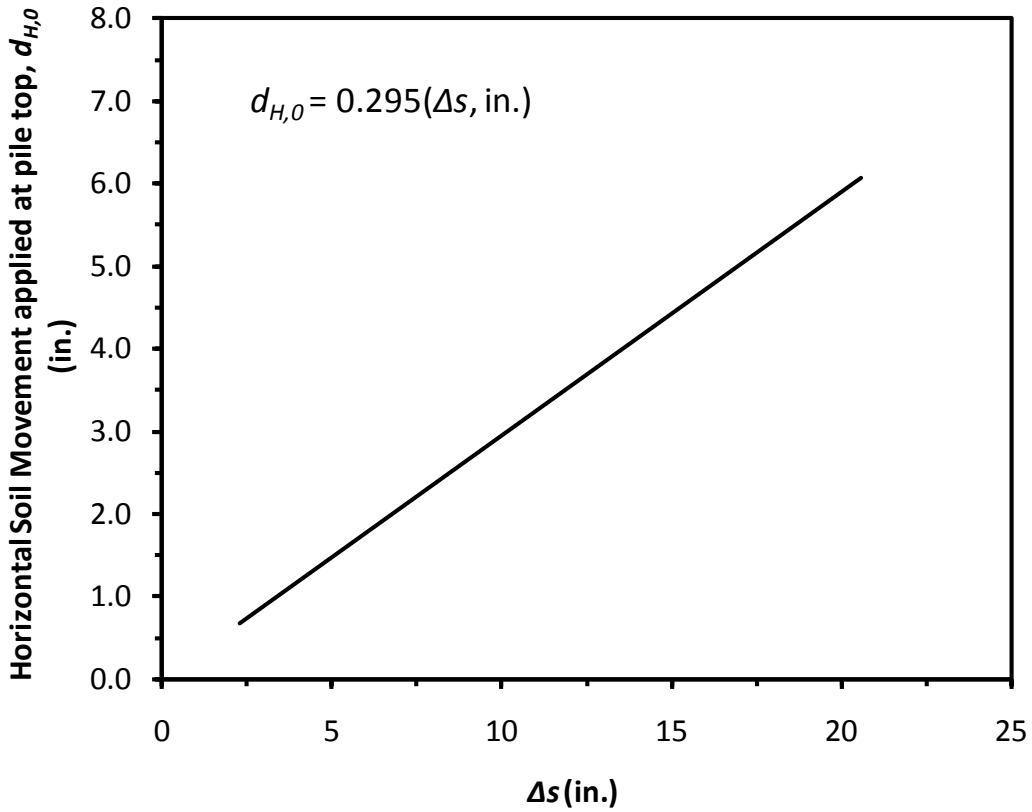

Figure 3: Horizontal soil movement considered at the top of the pile in LPILE versus *Δs*

5. Determine the magnitude of soil movement to be used in LPILE as displacement of the spring supports at the top of the pile, $d_{N,0}$, by summing the components of $d_{V,0}$ and $d_{H,0}$ that act normal to the pile.

$$d_{N,0} = d_{V,0}*\sin\beta + d_{H,0}*\cos\beta \quad (2)$$

6. Apply soil movement along the pile ($0 \le z \le L_c$) using the normalized soil compression profile developed in Step 2. The magnitude of soil movement, $d_{N,z}$, to be used in LPILE at a location along the pile, z, is determined by multiplying the normalized soil compression at the location, s/s_{max}, by the value of $d_{N,0}$ determined in Step 5.

7. Determine the sign of the pile batter angle according to the convention shown in Figure 4 for soil moving against the pile, which is opposite of the convention given in the LPILE 5.0 Plus User's Manual for soils resisting lateral movement of the pile.

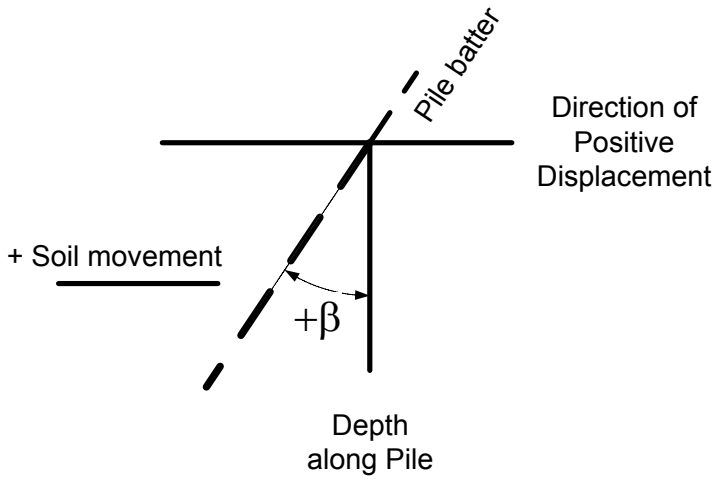

Figure 4: Sign convention in LPILE for soil movement and pile batter

8. Transform the soil profile according to Figure 5 to match the coordinate system used in LPILE, which is parallel to the pile axis.

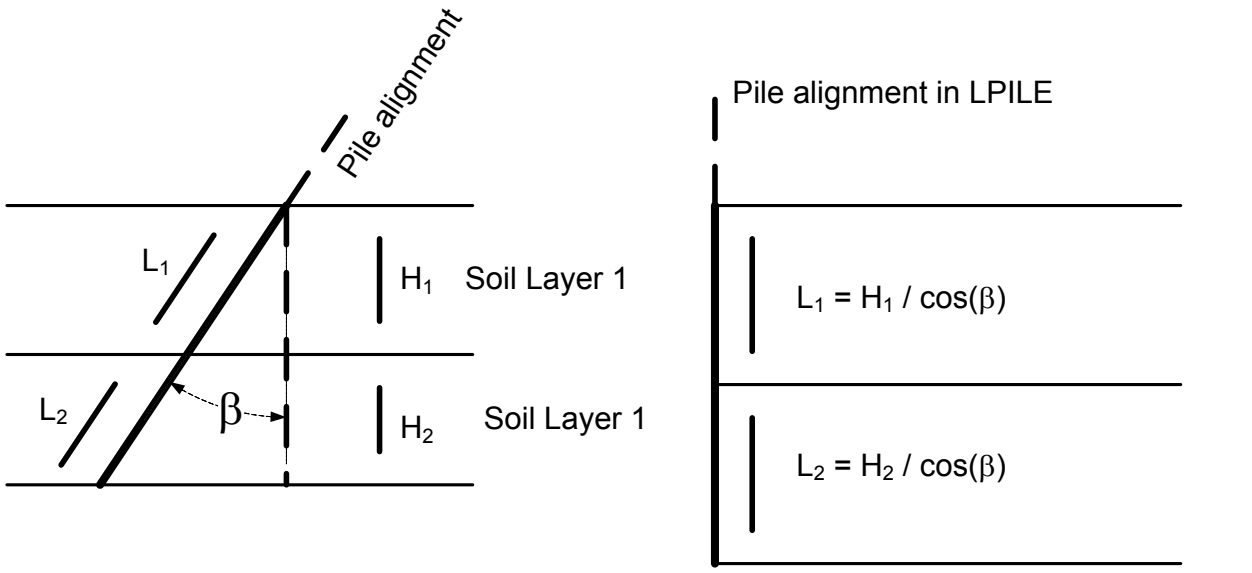

Figure 5: (a) Actual soil stratigraphy, (b) Soil stratigraphy modified for pile batter angle

9. Determine the factored unit weight, γ_z, for each soil layer considered in LPILE according to $\gamma_z = \gamma * \cos\beta$, where γ is the total unit weight of soils above the water table and γ is the buoyant unit weight of soils below the water table.

10. Determine the LPILE spring stiffness parameters using default values for strain at 50% of the maximum stress, ε_{50}, (initiated by leaving the field blank when entering soil properties in LPILE) for clay layers and the guidance provided in the LPILE User's Manual for the stiffness modulus, k, for sand layers.

11. Perform an LPILE analysis to determine the maximum moment, M_{max}, using a pinned restraint (zero moment and zero displacement) at the top of the pile, the spring support displacements from Steps 5 and 6, and the spring stiffness parameters from Step 10. The number of pile increments can be specified using the standard guidance in the LPILE User's Manual.

Attachment A: Notation

Notation used in May 2010 draft report	Description	Revised Notation (no change if blank)
L_c	length of pile in compressible clay layer	
L_e	length of pile within embankment	
z	distance along the pile starting from an origin at the bottom of the T-Wall	
β	pile batter angle	
P_y	vertical soil movement at the pile top, z=0	$d_{V,0}$
P_x	horizontal soil movement at the pile top, z=0	$d_{H,0}$
Δ	component of soil displacement acting normal to pile axis at location z, this is also the spring support displacement applied in LPILE at position z	$d_{N,z}$
Δ_o	spring support displacement at the top of the pile	$d_{N,0}$
γ_β	transformed soil unit weight = γ·cosβ	γ_z
M_{max}	maximum bending moment	
C	hand-calculated vertical compression w/o the presence of piles	
C_{FLAC}	vertical compression calculated in FLAC with piles present according to Geometry (b)	d_{FS}^{FLAC}
$P_{y,FLAC}$	the magnitude of vertical soil compression whose normal component when applied as Δ_o in LPILE produces the same maximum moment as FLAC	$d_{V,0}^{FLAC}$
X	the horizontal distance from where the pile intersects the T-Wall base to the point where a vertical profile intersects the pile 25% of the vertical distance from the base of the T-Wall to the top of the bearing layer	x
C_{FS}	vertical compression determined by hand along a profile a distance X from where the flood-side pile intersects the T-Wall base	s_{FS}
C_{PS}	vertical compression determined by hand along a profile a distance X from where the protected-side pile intersects the T-Wall base	s_{PS}
$C_{FS,\ FLAC}$	vertical compression determined using FLAC along a profile a distance X from where the flood-side pile intersects the T-Wall base	$d_{V,0}^{FLAC}$
C_{gr}	the greater compression between C_{FS} and C_{PS}	$s_{max} = \max\{s_{FS}, s_{PS}\}$
C_{ls}	the lesser compression between C_{FS} and C_{PS}	$\Delta s = \lvert s_{FS} - s_{PS} \rvert$

Attachment B: Sample calculation of LPILE soil movement for Case 19 (see 5 May 2010 draft report)

Relevant details:

L_c = 81 ft/cos(β) = 85.4 ft = 1024 in.
β = 18.43 deg.

Step 1: Calculate settlements

s_{FS} = 28.86 in.
s_{PS} = 8.28 in.

s_{max} = max{s_{FS}, s_{PS}} = 28.86 in.
Δs = |28.28 – 8.28| = 20.58 in.

Step 2: Develop normalized settlement profile

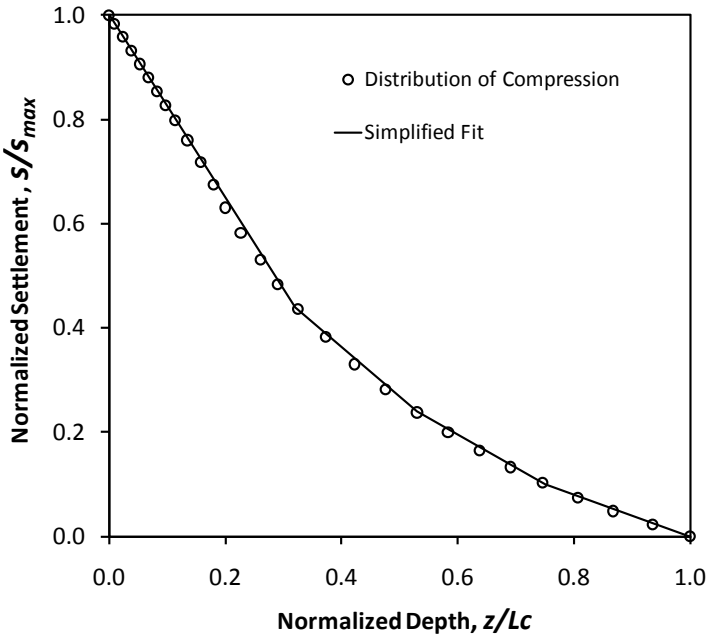

Figure 6: Normalized compression profile for Case 19

Step 3: Determine $d_{V,0}$

$d_{V,0}$ = $0.0168(s_{max})^2+0.2185(s_{max})$ = $0.0168(28.86)^2+0.2185(28.86)$ = 20.30 in.

Step 4: Determine $d_{H,0}$

$d_{H,0}$ = 0.295(Δs) = 0.295(20.58) = 6.07 in.

Step 5: Determine $d_{N,0}$

$d_{N,0}$ = $d_{V,0}$ sin(β) + $d_{H,0}$ cos(β)
$d_{N,0}$ = 20.30 sin(18.43) + 6.07 cos(18.43)
$d_{N,0}$ = 6.42 in. + 5.76 in. = 12.18 in.

Step 6: Determine distribution of soil movement

For example, the soil movement at z = 341 inches below the top of the pile is determined by entering the normalized compression profile shown in Figure 6 at z/L_c equal to 341/1024 = 1/3, reading off the corresponding normalized compression which equals approximately 0.44, and scaling the compression by $d_{N,0}$ to yield a compression, $d_{N,324}$ = 5.36 in. This process is repeated at other locations as necessary to develop the total soil movement profile to be applied in LPILE. Figure 7 shows the resulting compression profile, which is similar to Figure 6, but with the vertical axis scaled by $d_{N,0}$ = 12.18 in. and the horizontal axis scaled by L_c = 1024 in.

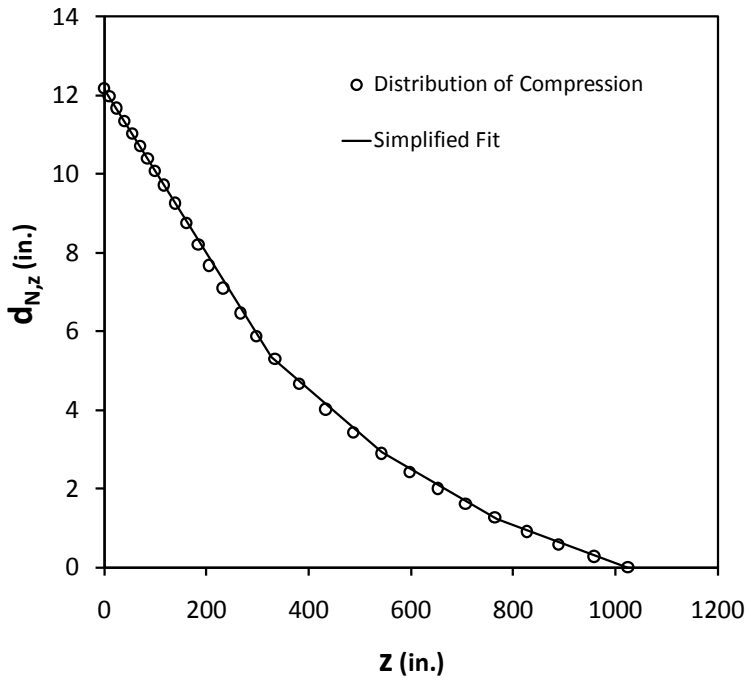

Figure 7: Compression profile for Case 19

Steps 7 through 11 of the revised procedure in the main body of this memorandum are the same as Steps 6 through 10 of the procedure in the 5 May 2010 draft report.

FINAL CONTRACT REPORT
Contract No. W912P8-07-D-0062

LPILE METHOD FOR EVALUATING BENDING MOMENTS IN BATTER PILES DUE TO GROUND SETTLEMENT FOR PILE-SUPPORTED FLOODWALLS IN NEW ORLEANS AND VICINTY

for
US Army Corps of Engineers

by

Michael P. McGuire, Virginia Tech
George M. Filz, Virginia Tech
Michael P. Navin, US Army Corps of Engineers
Kent D. Hokens, US Army Corps of Engineers

May 2010

TABLE OF CONTENTS

1.0 INTRODUCTION 1
1.1 Objective 1
1.2 Scope of Work 1
1.3 Organization of Report 2

2.0 LITERATURE REVIEW 3

3.0 BACKGROUND AND DEVELOPMENT OF METHOD 5
3.1 Background 5
3.2 Basics of Method 7
3.2.1 Application of Soil Movements in LPILE 7
3.2.2 Soil Response 9
3.2.3 Batter Angle 9
3.3 Validation of Basic LPILE Method 11
3.4 Refinement of Basic LPILE Method 18
3.4.1 Effect of Piles on Soil Settlements 21
3.4.2 Effect of T-Wall 24
3.4.3 Effect of Additional Piles 26
3.4.4 Effect of Fill Asymmetry 27
3.4.5 Effect of an All Clay Profile *32*
3.5 Comparison of LPILE Method with FLAC Results 32

4.0 PROCEDURE 35
4.1 Introduction to Procedure 35
4.2 Step-by-Step Procedure 39

5.0 EXAMPLE PROBLEM 44
5.1 Introduction to Example Problem 44
5.2 Step-by-Step Procedure for Example Problem 44

6.0 LIMITATIONS 53

7.0 CITED REFERENCES 54

APPENDICES 55
Appendix A: List of References 56
Appendix B: Overview and Impressions of Existing Methods 59
Appendix C: Summaries of Selected References 68
Appendix D: Summary of Experimental Studies and Available Data 99
Appendix E: Evaluation of Method by Shibata et al. (1982) 117

1.0 INTRODUCTION

This report describes development, validation, and use of a method to estimate bending moments in batter piles induced by downdrag settlements. This project was performed under US Army Corps of Engineers (USACE) Contract No. W912P8-07-D-0062. The method described herein was developed for the design of pile-supported T-Walls in the New Orleans area and vicinity. The method utilizes the program LPILE, developed by Ensoft, Inc., combined with conventional geotechnical procedures to calculate consolidation settlements and correlations generated for this project. The approach is intended for practical use by designers, and it was developed to be as straightforward as possible while retaining the capability to address complexities of the soil-structure interactions that occur for pile-supported T-Walls.

1.1 Objective

Batter piles used to support T-Walls in the New Orleans area and vicinity may be subject to downdrag loads produced by consolidation of soft clay foundation soils under the weight of a levee embankment. When a pile is battered, a component of the total downdrag load on the pile acts normal to the pile axis and produces bending moments. The bending moments due to downdrag can be significant, and they can influence the design of the piling system used to support the T-Wall. The objective of this report is to provide guidance for estimating the bending moments produced by downdrag for the relatively complex soil-structure interaction characteristics of pile-supported T-Walls.

1.2 Scope of Work

The scope of work, as outlined in the January 20, 2010 Statement of Work included in the project contract, was limited to:

1. Reviewing existing methods used by A/E firms and identified in published sources to estimate downdrag-induced bending moments in batter piles.
2. Evaluate the existing methods
3. Recommend minor changes to an existing method for use on projects in the New Orleans area and vicinity.

None of the existing methods used by A/E firms or identified during the literature review were sufficiently validated or detailed enough to address the characteristics of typical pile-supported T-walls used by the USACE in New Orleans and vicinity. Consequently, an extensive effort was undertaken to develop and validate a method that would satisfy USACE requirements. This included comparing LPILE analyses with published data from an instrumented field case history and laboratory experiments. LPILE analyses were also compared with an extensive series of numerical analyses that were performed by Mike Navin as part of this project. These comparisons resulted in two new components for the LPILE Method: (1) a chart that accounts for the stiffening effect of battered piles on ground settlements in the vicinity of the battered piles and (2) a chart that accounts for lateral movement of the soil when asymmetric fill loads

are applied around the T-wall. The effect of lateral movements depends on whether the T-wall is supported by two or three battered piles because the T-wall and pile frame is freer to move laterally under asymmetric fill loads when it is supported by two piles than when it is supported by three piles. In addition, some of the numerical analyses addressed effects of lack of a distinct bearing layer and the presence of a sheet pile cutoff wall.

1.3 Organization of the Report

Section 2 of the report presents an overview of the literature review, with comprehensive information about the published literature located in appendices. Section 3 presents a detailed discussion of the background and development of the LPILE Method for calculating downdrag-induced bending moments in battered piles. Section 4 presents a concise step-by-step outline of the method. Section 5 presents a detailed example problem showing the complete execution of the method. Section 6 presents limitations of the method. A list of references cited in the main body of the report is in Section 7.

Appendix A provides the entire list of references examined for the project, including some items discussed in the other appendices but not cited in the main body of the report. Appendix B provides descriptions and assessments of existing methods for calculating downdrag-induced bending moments in battered piles. Appendix C provides summaries of selected references from the published literature. Appendix D provides descriptions and data summaries for an instrumented field case history and for two laboratory experiments. Appendix E provides a detailed evaluation of the method proposed by Shibata et al. (1982).

Designers who are primarily interested in applying the LPILE Method can focus their reading on Sections 4, 5, and 6.

2.0 Literature Review

The literature review for this project consisted of evaluating information from two primary source categories. The first source was unpublished documents, hand calculations, and electronic files pertaining to methods used by A/E firms working on USACE projects to estimate downdrag-induced bending moments. In total, three such methods were identified. Two of the methods were used by Eustis Engineering, Inc., while the third was used by Burns Cooley Dennis, Inc.

Published journal and conference papers were the other main source of information about downdrag-induced bending moments in batter piles. Several databases were used for the literature review including: the ASCE Research Library, Virginia Tech's Newman Library, Compendex, and the Transportation Research Institute Search engine (TRIS). A complete list of references identified during the literature review is provided in Appendix A. The following papers describe specific methods to calculate downdrag-induced bending moments in battered piles.

- Sato et al. (1970)
- Broms and Fredriksson (1976)
- Shibata et al. (1982)
- Takahashi (1985)
- Sato et al. (1987)
- Sawaguchi (1989)
- Rao et al. (1994)

Appendix B provides a concise overview and our assessments and impressions of all the existing methods to estimate downdrag-induced bending moments in batter piles. This appendix lists the strengths and limitations of each method, the assumptions used, and some additional commentary. Written summaries of selected references describing the existing methods are presented in Appendix C of this report. Of these methods, the procedure proposed by Shibata et al. (1982) and the use of LPILE proposed by Burns, Cooley, Dennis, Inc., both possessed a logical basis and were simple enough for practical use. However, they have not been validated for conditions of USACE pile-supported T-walls in New Orleans and vicinity.

In order to evaluate published methods and to validate the LPILE Method proposed in this report, the results of laboratory and field-scale studies found in published sources were compiled and digitized. Descriptions of the experimental studies are in Appendix D. In general, the model piles used in the experiments were installed in pairs and hinged at the top to form an A-frame configuration.

The method proposed in Shibata et al. (1982) uses a closed-form solution that could be made to achieve good agreement with digitized bending moment data from the experimental studies indentified in the literature. However, agreement with the measured bending moments

required back-calculating values of the input parameter relating the pile diameter and the average undrained shear strength of the foundation soil to the stiffness of the linear pile-soil springs. This parameter ranged from a value of 0.7 to 90, making use of this method for forward analysis difficult without prior understanding of the pile-soil response for a specific set of conditions. The results of this evaluation are included in Appendix E of this report. The method by Shibata et al. (1982) was eventually abandoned as a recommended procedure for three main reasons: 1) the difficulty of selecting the spring stiffness parameter, 2) the linear springs used in Shibata's method are less sophisticated than the non-linear p-y curves used in LPILE, 3) a procedure using LPILE requires about the same level of effort on the part of the designer, so there is no ease-of-use advantage to the closed-form solution proposed by Shibata et al. (1982).

The LPILE Method described in this report is an extension of the method used by Burns, Cooley, Dennis, Inc., with added procedures to account for the stiffening effect of the piles on soil settlements, asymmetric fill placement, and differences in T-Wall support conditions for two or three batter piles.

3.0 DEVELOPMENT AND DESCRIPTION OF METHOD

3.1 Background

A method utilizing the program LPILE Plus 5.0, produced by Ensoft, Inc., has been developed to estimate the bending moments generated in batter piles subjected to downdrag. The approach uses the soil movement option in LPILE 5.0 Plus to apply the component of downdrag that acts normal to the pile axis when the pile is battered. As shown in Figure 1, the soil movement is treated as displacement of the back side of the nonlinear p-y springs that act on the pile. For embankment loading that is symmetrical on the flood side and protected side of the T-Wall, the primary direction of soil displacement due to consolidation under the embankment loading is vertical. For embankment loading that is asymmetric, there may be a significant component of lateral soil movement. The most straightforward approach to estimating the component of soil displacement that acts normal to the pile axis, Δ, is to multiply the vertical component of soil displacement by the sine of the batter angle taken from vertical and add the result to the product of the horizontal component of soil displacement and the cosine of the batter angle.

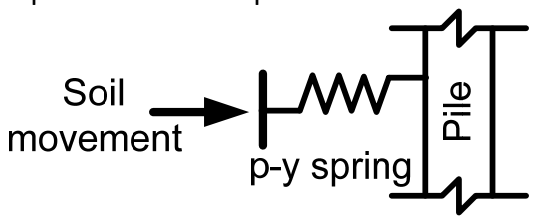

Figure 1: Soil movement applied to soil-pile

Using the concept described above, the main issues to be addressed to apply this approach to T-Walls in the New Orleans area are:

1. What p-y soil response curves should be used in LPILE to represent the relationship between the soil pressure exerted on the pile and the soil movement due to consolidation?
2. How should pile batter be accounted for in LPILE?
3. What type of boundary conditions for moment and displacement should be applied to the top of the pile in LPILE?
4. What are the influences of the T-Wall, a sheet pile cut-off, and a second batter pile on the protected side on the downdrag-induced bending moments?
5. How can vertical compression calculated using straightforward hand calculations be adjusted to factor in the support provided by the piles and the T-Wall?
6. How can the impact of lateral soil displacement due to asymmetric fill be accounted for in the soil movements used as input to LPILE?

The following steps and observations led to answers to the above questions:

a) LPILE was applied to the experimental field scale study described by Takahashi (1985), Sato et al. (1987), and Sawaguchi (1989). LPILE was also applied to the laboratory studies conducted by Takahashi (1985) and Shibata et al. (1982).

b) Successful validation of the LPILE Method against the experimental results was achieved using a simple approach for determining soil movement due to vertical consolidation, the p-y relationships built into LPILE to model the soil layers, and an appropriate sign convention for entering the batter angle.
c) A parametric study was performed using the finite difference analysis program FLAC (Itasca 2002) for a pile-supported T-Wall on a simple foundation soil profile that was based on the profile used in the numerical model developed by GeoMatrix Consultants (2007) for analysis of T-Walls in the New Orleans area.
d) The results of the FLAC study were used as the basis for exploring the influence of the T-Wall, the sheet pile cut-off, and a second batter pile on the protected side on downdrag-induced bending moments. These analyses permitted determining which of these influences are significant for USACE T-Wall projects in the New Orleans area.
e) Compression of the foundation soil profile determined from the FLAC analyses in Step (c) was compared to the result of hand calculations performed using conventional geotechnical calculations without the stiffening effect of the T-Wall and piles. When the T-Wall and piles were removed from the FLAC model, the compressions calculated by hand agreed with the values determined using FLAC. When the T-Wall and piles were left in place in the FLAC model, the compressions in the vicinity of the piles were considerably smaller than those estimated by hand. The agreement between the experimental studies and the LPILE Method was based on using the reported settlements, which were influenced by the piles. Therefore, an approach had to be developed to adjust the hand-calculated soil compressions to account for the settlement reducing influence of the piles and the T-Wall.
f) The form of the LPILE Method that was validated against the experimental results in Step (b), together with the method for adjusting hand calculated settlements described in Step (e), were successfully used to calculate bending moments in agreement with those from the FLAC analyses in Step (c) for the case where the embankment fill is symmetrical with respect to the T-Wall. This result suggested that the LPILE Method was also applicable to pile-supported T-Walls that have a more complex soil-structure interaction than the A-frame pile configurations used in the experimental studies.
g) The FLAC model was then used to investigate the impact of asymmetric fill on the flood and protected sides of the T-Wall. A simple procedure was developed to relate soil compression determined by hand on the flood and protected sides of the T-Wall to the magnitude of horizontal soil movement which, when applied normal to the pile in LPILE, yielded bending moments that agreed with those determined by FLAC analyses.

3.2 Basics of the Method

3.2.1 Application of Soil Movements in LPILE

As described previously, the most straightforward way to determine the magnitude of soil movement normal to the pile axis at a position along the pile is to multiply the vertical component of soil displacement by the sine of the batter angle from vertical and add the result to the product of the horizontal component of soil displacement and the cosine of the batter angle. Rigorous application of this approach would require determining the soil movements at many locations along the length of the pile. Because the pile is battered, such an operation would require calculating movements along many different vertical profiles and using the soil compression magnitude where the vertical profile intersects the pile. In the methods developed by Shibata et al. (1982) and Sawaguchi (1989) to estimate downdrag-induced bending moments, soil movements due to vertical compression are determined based on settlement evaluated at a single location. These methods make the simplifying assumption that soil movements are distributed linearly along the length of the pile from the value at the top of the pile to a value of zero where the pile intersects the bearing layer. For piles that penetrate the embankment inducing the consolidation settlement, Takahashi (1985) assumed that the soil movements are constant over the length of the pile within the embankment. These simplifying assumptions are incorporated in the LPILE Method described in this report.

Figures 2 and 3 show the relevant components and dimensions of the T-Wall and embankment configurations considered in this project. In these figures, L_c = the length of pile in the compressible clay layer, and L_e = the length of pile within the embankment. For a T-wall with its base below the embankment, as shown in Figure 2, L_c = the length of the pile from the bottom of the T-wall to the top of the bearing layer, and L_e = 0. For a T-wall with its base in the embankment, as shown in Figure 3, L_c = the length of the pile from the top of the clay layer to the top of the bearing layer, and L_e = the length of pile within the embankment. For both cases, z = the distance along the pile starting from an origin at the bottom of the T-wall. The spring support displacements, Δ, in LPILE are applied as shown in Equations (1) and (2), where Δ_o is the spring support displacement at the top of the pile and P_y and P_x are, respectively, the vertical and lateral soil movements at z = 0.

$$\Delta_o = P_y * \sin\beta + P_x * \cos\beta \qquad (1)$$

$$\Delta = \Delta_o \qquad \text{for } z < L_e \qquad (2a)$$

$$\Delta = \Delta_o * [1 - (z - L_e)/L_c] \qquad \text{for } z \geq L_e \qquad (2b)$$

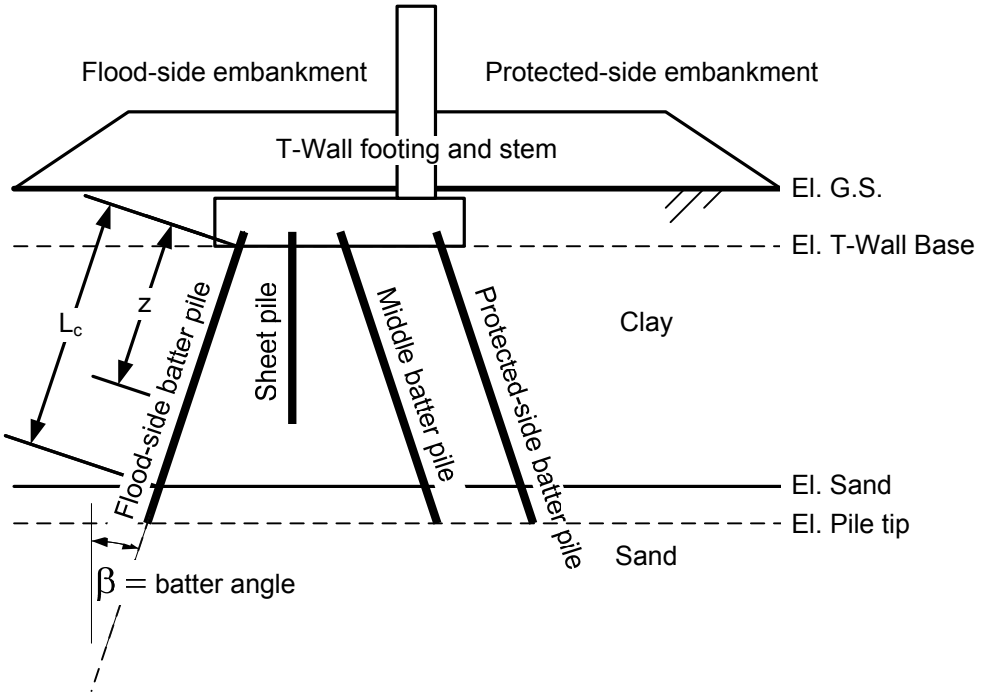

Figure 2: Layout of T-Wall with base below embankment

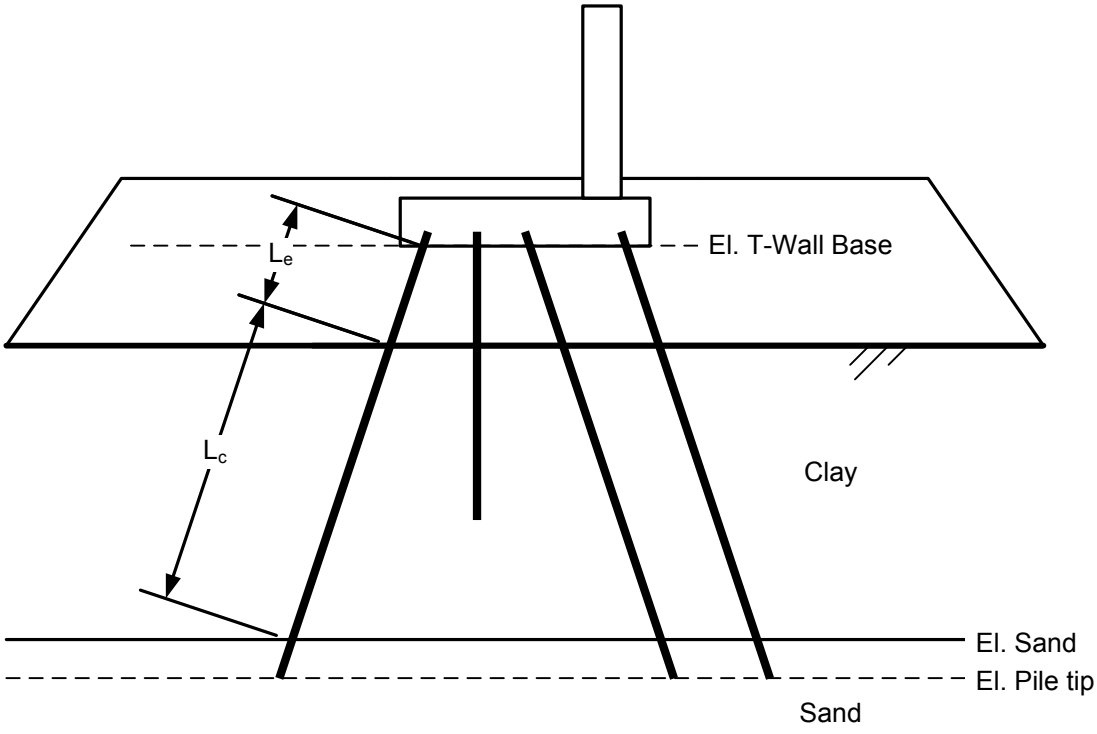

Figure 3: Layout of T-Wall with base in embankment

3.2.2 Soil Response

The soil response for the soft clay is applied in LPILE using the built-in p-y relationships developed by Matlock (1970). Even though downdrag is a long-term consolidation phenomenon, the standard p-y curves for clays that are incorporated in LPILE provided a good fit to the results of the experimental studies, as shown in Section 3.3 of this report. The undrained strengths used in LPILE should be based on experience or available laboratory and field data. A sand bearing layer located beneath the clay can be applied in LPILE using the p-y relationship proposed by Reese et al. (1974). The yield strength and stiffness parameters for the p-y response curves are assigned using guidance in the LPILE 5.0 Plus User's Manual (Ensoft, 2008). In the absence of specific information regarding selection of the values of strain at 50% of maximum stress, ε_{50}, for the soft clay and the soil modulus parameter, k, for sand, the guidance provided in Tables 3.2 and 3.4 of the LPILE User's Manual are recommended for selecting input parameters for LPILE. As an example, the input values used for the soil profile in the LPILE analyses described in Section 3.5 are shown below in Table 1.

Table 1: Input parameters used in LPILE to determine p-y relationships for the analyses in Section 3.5

Layer	Depth along pile (in.)	Unit weight, γ_β (pci)	Undrained strength, s_u (psi)	Strain at 50% maximum stress, ε_{50}	Effective stress friction angle, φ'	Soil modulus parameter, k (lb/in^3)
Soft Clay	0 to 190	0.028	1.39	0.015	--	--
Soft Clay	190 to 1024	0.028	1.39 to 6.35	0.015 to 0.005	--	--
Sand	1024 to 1088	0.033	--	--	30	60

3.2.3 Batter Angle

The following three steps are taken to account for pile batter in the LPILE Method described here:

- The pile length is measured along the pile, and the soil layer thicknesses are transformed to match, as shown in Figure 4.
- The unit weights of the soils are adjusted to produce the same vertical effective stress in the transformed soil profile as in the real soil profile at corresponding positions along the pile length. This is done by multiplying the soil unit weight, γ, by the cosine of the pile batter angle to produce an adjusted unit weight, $\gamma_\beta = \gamma^* \cos(\beta)$. Total unit weights should be multiplied by the cosine of the pile batter angle for soils above the water table, and buoyant unit weights should be multiplied by the cosine of the pile batter angle for soils below the water table.

- LPILE provides for the possibility of a wedge type of failure mode near the ground surface for laterally loaded piles, and this failure mode depends on the batter angle of the pile. The sign convention for a pile that is subject to an applied load at the top and whose lateral movement is *resisted by the soil* is shown in Figure 3.9 in the LPILE User's Manual. When the *soil is moving against a pile* that is restrained at the top, the sign convention in Figure 3.9 of the LPILE User's Manual should be reversed, and the sign convention shown in Figure 5 should be applied. This means that a positive batter angle should be input to LPILE for calculating bending moments due to downdrag.

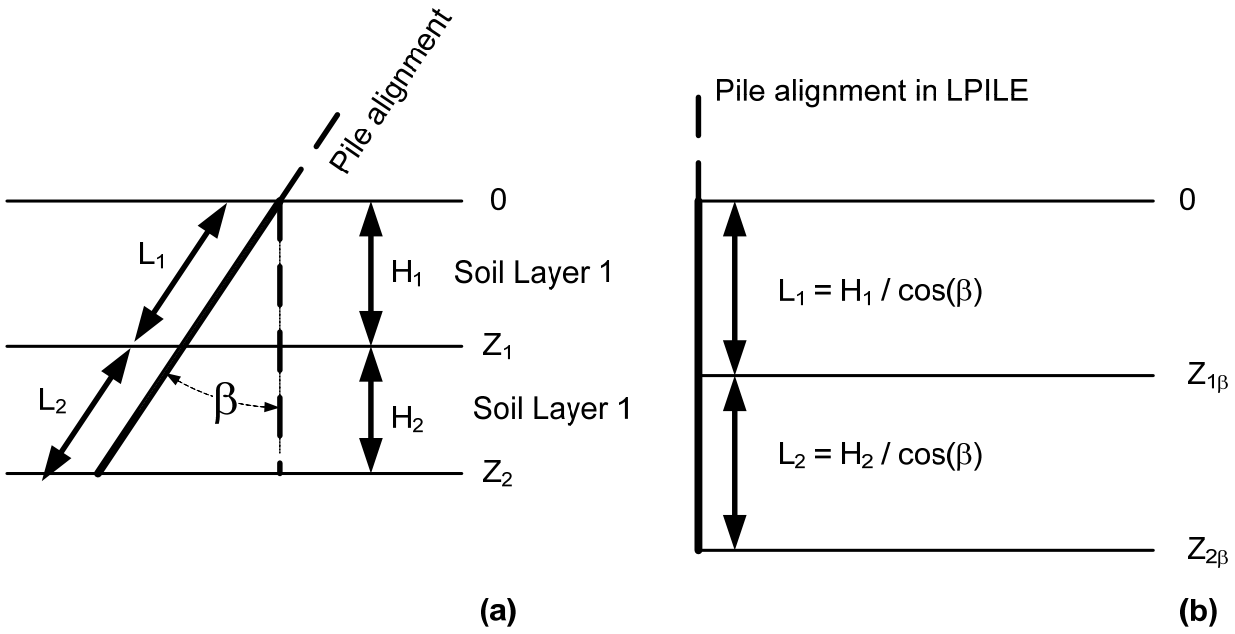

Figure 4: (a) Actual soil stratigraphy, (b) Soil stratigraphy modified for pile batter angle

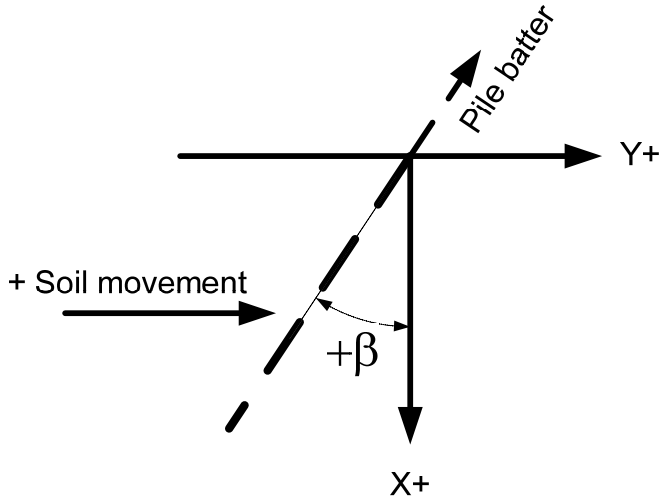

Figure 5: Sign convention in LPILE for soil movement and pile batter

3.3 Validation of Basic LPILE Method

The LPILE Method described in the preceding sections was applied to the experimental results from the field tests reported by Takahashi (1985), Sato et al. (1987), and Sawaguchi (1989), as well as laboratory studies by Takahashi (1985) and Shibata et al. (1982). The details of these studies can be found in Appendices C and D of this report. For the field test, an embankment of unspecified material was constructed over a soft clay stratum to induce consolidation. A pair of hinged piles was then installed through the embankment and soft clay stratum to a bearing layer of stiff clay and sand. A portion of the hinged pair of piles extended above the ground surface. Bending moments were measured in the piles over the year-long duration of the experiment. The input used in LPILE for the field experiment is shown below in Tables 2, 3, and 4. The value for the moment of inertia shown in Table 2 was determined according to $\pi/4*(r_o^4 - r_i^4)$, where r_o and r_i are the inner and outer radii of the pipe pile section determined from information given in the referenced papers. This value of moment of inertia is different from the value reported in Sato et al. (1987).

Table 2: Pile Properties for field experiment

Pile Length (m)	Dist above ground (m)	Batter angle (deg)	Diameter (m)	Moment of Inertia (m^4)	Area (m)	Youngs Modulus (kN/m^2)
38.7	0.9	15	0.508	0.0004623	0.0148	2e8

Table 3: Soil layer input in LPILE for field experiment

Layer	Elevation (m)	Distance along pile (m)	Unit weight, γ (kN/m^3)	Unit weight, γ_β (kN/m^3)	Undrained strength, s_u (kN/m^2)	Strain at 50% maximum stress, ε_{50}
Stiff Clay	2.5 to 0	0.9 to 3.5	7.2	7.0	25 *(assumed)*	0.007
Soft Clay	0 to -2.5	3.5 to 6.1	7.2	7.0	20 to 16.5	0.005 to 0.01
Soft Clay	-2.5 to -26	6.1 to 30.4	7.2	7.0	16.5 to 50	0.01 to 0.005
Stiff Clay	-26 to -34	30.4 to 38.7	8	7.7	60	0.007

Table 4: Soil movements in LPILE

Depth along pile (m)	364-day Soil Movement (m)	243-day Soil Movement (m)	119-day Soil Movement (m)	55-day Soil Movement (m)
0	--	--	--	--
0.9	--	--	--	--
0.9	0.0681	0.0590	0.0422	0.0280
3.5	0.0681	0.0590	0.0422	0.0280
11.8	0.0108	0.0094	0.0067	0.0044
38.7	0	0	0	0

The results of the LPILE analyses are shown in Figure 6, where it can be seen that the LPILE results are in good agreement with the field data.

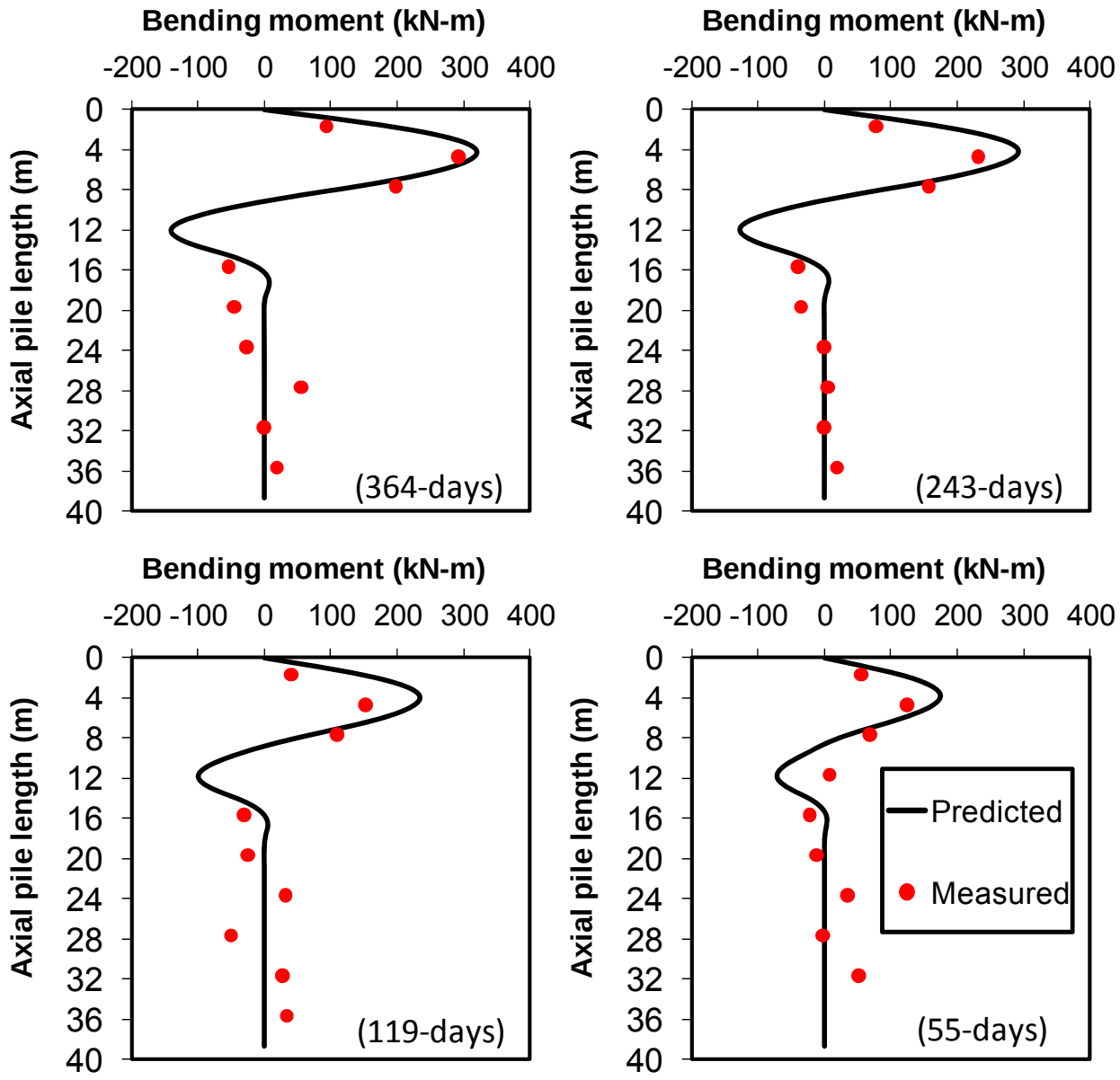

Figure 6: Comparison of LPILE-predicted moments versus moments measured during field experiment

In addition to the field study, the basic LPILE Method was compared to laboratory-scale experiments performed by Takahashi (1985) and Shibata et al. (1982). The laboratory study performed by Takahashi (1985) included four pairs of hinged piles at different batter angles. A layer of sand and steel shot was used to load the clay around the piles. A portion of the piles extended above the surface of the sand and shot. Bending moments measured at various times during the year-long experiment were reported in the paper for piles with two different batter angles. The input used in the LPILE analysis of the laboratory experiments conducted by Takahashi (1985) are shown in Tables 5, 6, and 7. Due to the very low effective stresses present at the model scale, it is unclear whether the guidance for *k* given in the LPILE User's Manual is directly applicable. Accordingly, a range of soil modulus values, *k*, was used to represent the sand and steel shot layer used in the experiment to apply the surcharge pressure. In this

instance, the LPILE analysis was not sensitive to values of *k* above 10,000 kN/m^3. The results of the LPILE analysis for *k* equal to 1,000 and 10,000 kN/m^3 are shown in Figure 7, where it can be seen that a *k* value of 1,000 kN/m^3 produced reasonably good agreement between the calculated and measured values of maximum bending moment.

Table 5: Pile Properties for lab experiment by Takahashi (1985)

Pile Length (m)	Batter angles (deg)	Dist. above ground 20° (m)	Dist. above ground 10° (m)	Diameter (m)	Moment of Inertia (m^4)	Area (m)	Youngs Modulus (kN/m^2)
1.78	20,10	0.237	0.308	0.075	4.556e-9	0.000675	2e8

Table 6: Soil layer input in LPILE for lab experiment by Takahashi (1985)

Layer	Sand	Soft Clay	Soft Clay
Depth along pile 20° batter (m)	0.237 to 0.578	0.578 to 1.000	1.000 to 1.780
Depth along pile 10^0 batter (m)	0.308 to 0.633	0.633 to 1.000	1.000 to 1.780
Unit weight, γ (kN/m^3)	31.2	5.2 to 5	5 to 5.4
Unit weight, γ_β, 20° batter (kN/m^3)	29.4	4.8 to 4.7	4.7 to 5.1
Unit weight, γ_β , 10° batter (kN/m^3)	30.8	5.1 to 4.9	4.9 to 5.3
Undrained strength, s_u (kN/m^2)	--	5	5 to 10
Strain at 50% maximum stress, ε_{50}	--	0.01	0.01 to 0.005
Effective friction angle, φ'	35	--	--
Soil modulus parameter, *k* (kN/m^3)	1,000 or 10,000	--	--

Table 7: Soil movements in LPILE for lab experiment by Takahashi (1985)

Depth along pile (m)	14-week Soil Movement (m) 20° batter angle	4-week Soil Movement (m) 20° batter angle	1-week Soil Movement (m) 20° batter angle	14-week Soil Movement (m) 10° batter angle
0	0.0561	0.0338	0.0157	0.0285
1.78	0	0	0	0

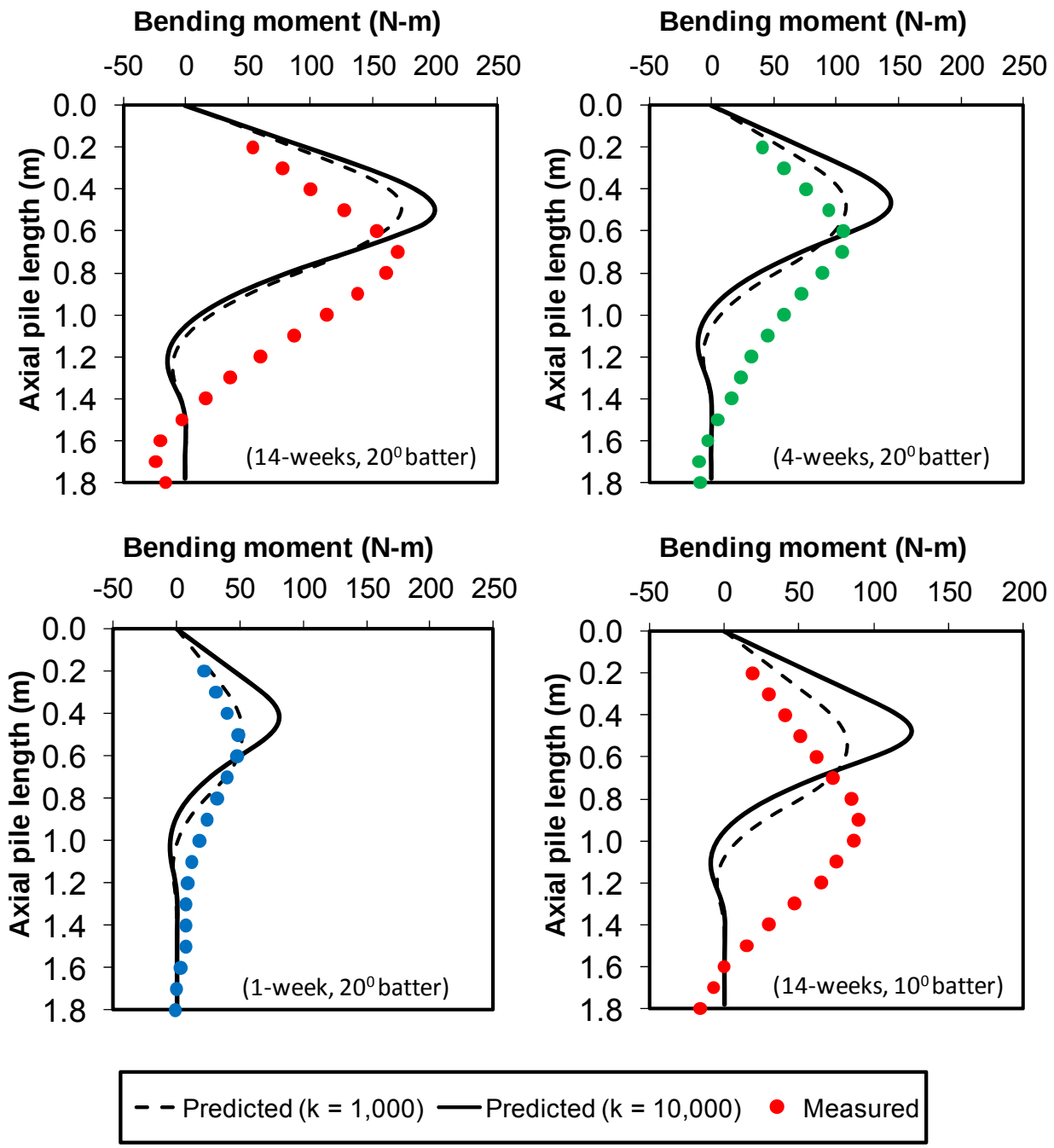

Figure 7: Moments predicted in LPILE analysis of laboratory study by Takahashi (1985)

The inputs used in the LPILE analysis of the laboratory study performed by Shibata et al. (1982) are shown in Tables 8, 9, and 10. Shibata's study involved measuring bending moments in model piles subjected to downdrag produced by applying three magnitudes of surcharge pressure: 20kPa, 40kPa, and 60kPa. Since the piles in this model were pinned at both the top and bottom, a pinned boundary connection was needed at the bottom of the pile in LPILE. This was accomplished by adding a length of pile with a very low flexural rigidity. The flexible portion of the pile was then anchored in a very strong rock layer. These modifications resulted in a pinned condition of essentially no moment or displacement at the tip of the pile. Figure 8

shows the results of the LPILE analysis performed for the laboratory study by Shibata et al. (1982), and it can be seen that the agreement is reasonably good.

Table 8: Pile Properties for laboratory study by Shibata et al. (1982)

Pile Length (m)	Batter angles (deg)	Diameter (m)	Moment of Inertia (m^4)	Area (m)	Youngs Modulus (kN/m^2)
0 to 0.6	15	0.06	9.6e-8	0.000222	2.1e8
0.6 to 1	15	0.06	1e-8	0.000222	100000

Table 9: Soil layer input in LPILE for laboratory study by Shibata et al. (1982)

Layer	Depth along pile (m)	Unit weight, γ (kN/m^3)	Unit weight, γ_β (kN/m^3)	Undrained strength, s_u† (kN/m^2)	Strain at 50% maximum stress, ε_{50}	Unconfined compressive strength (kN/m^2)
Soft Clay	0 to 0.6	6.7	6.5	3 (*6*), 6 (*12*), 9 (*18*)	0.02	
Rock	0.6 to 1.0	23	22			100,000

† The values of s_u in parentheses are those provided in the paper by Shibata et al. (1982) for surcharge pressures of 20, 40, and 60 kPa. However, there is reason to believe that these values of su are too high, as discussed in the text below. The LPILE analysis results shown in Figure 8 are based on the values of s_u equal to 3, 6, and 9 kPa for surcharge pressures of 20, 40, and 60 kPa.

Table 10: Soil movements in LPILE for laboratory study by Shibata et al. (1982)

Depth along pile (m)	20 kPa Soil Movement (m)	40 kPa Soil Movement (m)	60 kPa Soil Movement (m)
0	0.0142	0.0172	0.0182
0.6	0	0	0
1.0	0	0	0

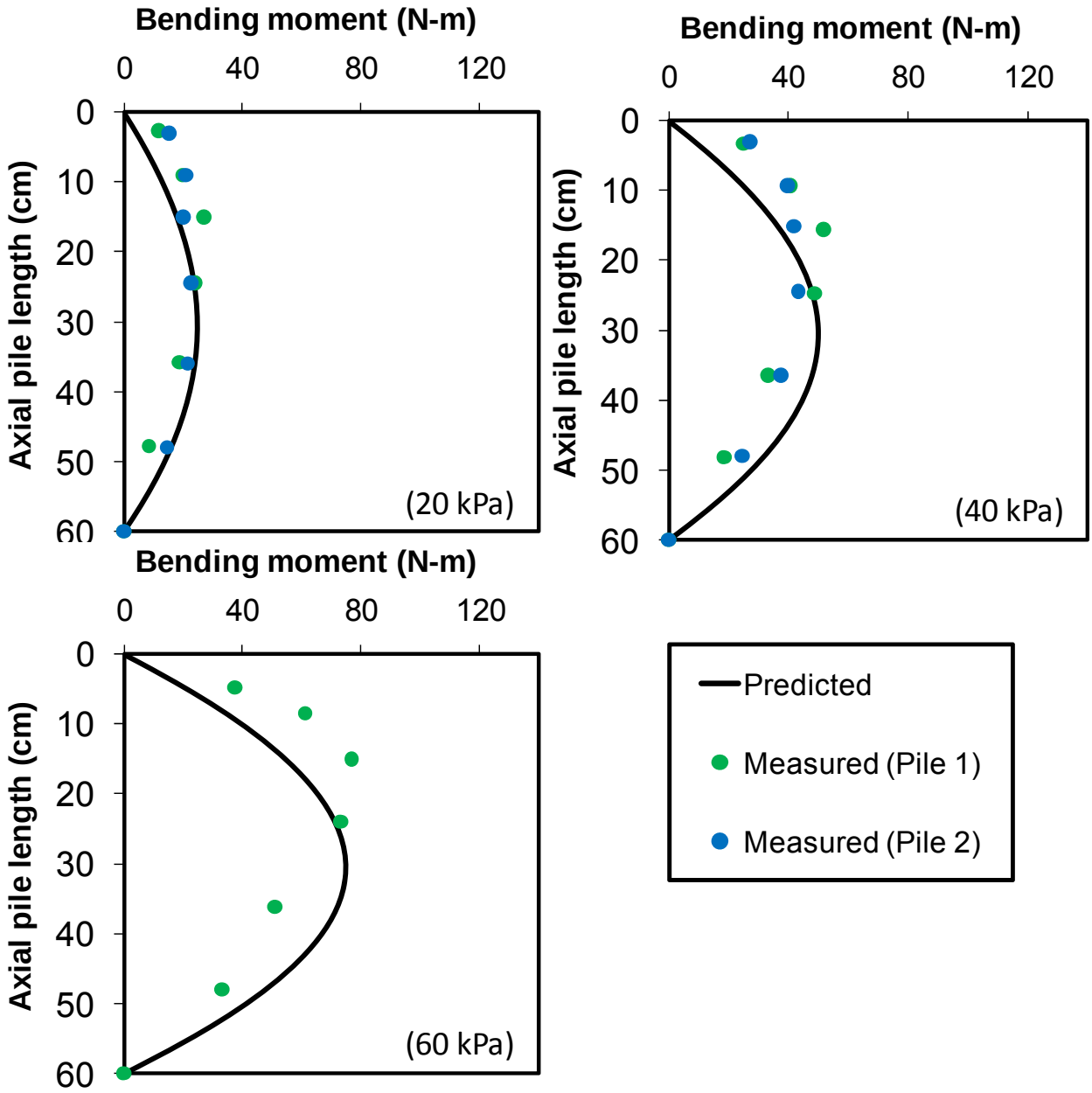

Figure 8: LPILE analysis of laboratory study by Shibata et al. (1982)

The soil movements used in LPILE for the laboratory studies by Takahashi (1985) and Shibata et al. (1982) are based on reported values of surface settlement of the samples. Since the apparatuses used in both laboratory studies were too small for the measured settlements to reflect a free field condition, it can be reasonably assumed that the reported settlements are influenced by the presence of the piles. The results of the field-scale study include a vertical settlement profile obtained from six reference points embedded in the ground. None of the papers describing the field study explicitly indicate the location of the settlement profile relative to the piles; however, based on the width of the surcharge embankment provided by Sawaguchi (1989) and the horizontal projection of the piles from the center of the

embankment, it can again be assumed that the measured settlements must have been influenced by the presence of the piles.

Reported values of undrained shear strength were used in LPILE for the field study and laboratory study by Takahashi (1985). For the laboratory study performed by Shibata et al. (1982) the clay was placed around the piles as a slurry and allowed to consolidate under self weight, therefore the undrained strength of the clay at the start of the test when the surcharge pressure was applied was likely very low, with an average value of about 0.5 kPa. The undrained strengths used in the paper are based on an assumed undrained strength ratio of 0.3 multiplied by the value of the surcharge pressure. It is likely that this approach significantly overpredicts the undrained strength of the clay for the majority of the consolidation-induced soil movement. This is supported by the fact that LPILE significantly overpredicts bending moments when the assumed strength values listed in the paper are used. If strengths equal to half the reported values are used, to approximately represent the average strength during the consolidation process, the agreement with LPILE for the three surcharge pressures used is quite good, as shown in Figure 8.

3.4 Refinement of the Basic LPILE Method

The validation of the LPILE Method described in Section 3.3 of this report left the following issues still to be addressed to develop a practical method that can be applied to the T-walls typically used by the USACE in New Orleans and vicinity:

A. The stiffening effect of the piles on soil settlements, as compared to conventional settlement calculations without piles.
B. The shielding effect of the T-wall, which may reduces stress changes in the compressible soil from the fill load.
C. The effects of multiple batter piles on the protected side.
D. The effects of asymmetry of embankment fill, which could cause an additional bending moment on the pile closest to the greater fill load.
E. The effects of a sheet pile cutoff wall.
F. the effects of an all clay profile without a sand bearing layer.

These factors were investigated for the geometries shown in Figure 9 and the cases listed in Table 11 using an adaptation of the FLAC model developed by Geomatrix Consultants, Inc. Table 11 also includes the maximum bending moment values, M_{max}, from the FLAC analyses. The clay used in the FLAC model was assigned the undrained shear strength profile shown in Figure 10. Other property values for the clay are listed in Table 12. The ground water level is assumed to be at the ground surface. The bottom of the model is at EL – 140 ft, and no displacements are allowed below this level. For the purpose of settlement calculations, the preconsolidation pressure is assumed to be equal to the initial effective vertical stress below EL -20 ft and to be equal to the initial effective vertical stress at EL -20 ft for elevations above -20 ft. The sand was assigned an effective friction angle of 30 degrees and a buoyant unit weight of 60.5 pcf.

The embankment geometry for the surcharge pressure extended laterally such that the mid-point of the side slopes is 75 ft from the T-Wall stem in either direction for cases where the fill is symmetric and only on the flood side for cases with asymmetric fill.

Items (A) through (F) are addressed in the sections that follow. Section 3.4.1 addresses Item (A), Section 3.4.2 addresses Item (B), Item (C) is discussed in Section 3.4.3 for symmetric fill and in Section 3.4.4 for asymmetric fill, Item (D) is addressed in Section 3.4.4, Item (E) is discussed in Sections 3.4.3 and 3.4.4, and Item (F) is addressed in Section 3.4.5.

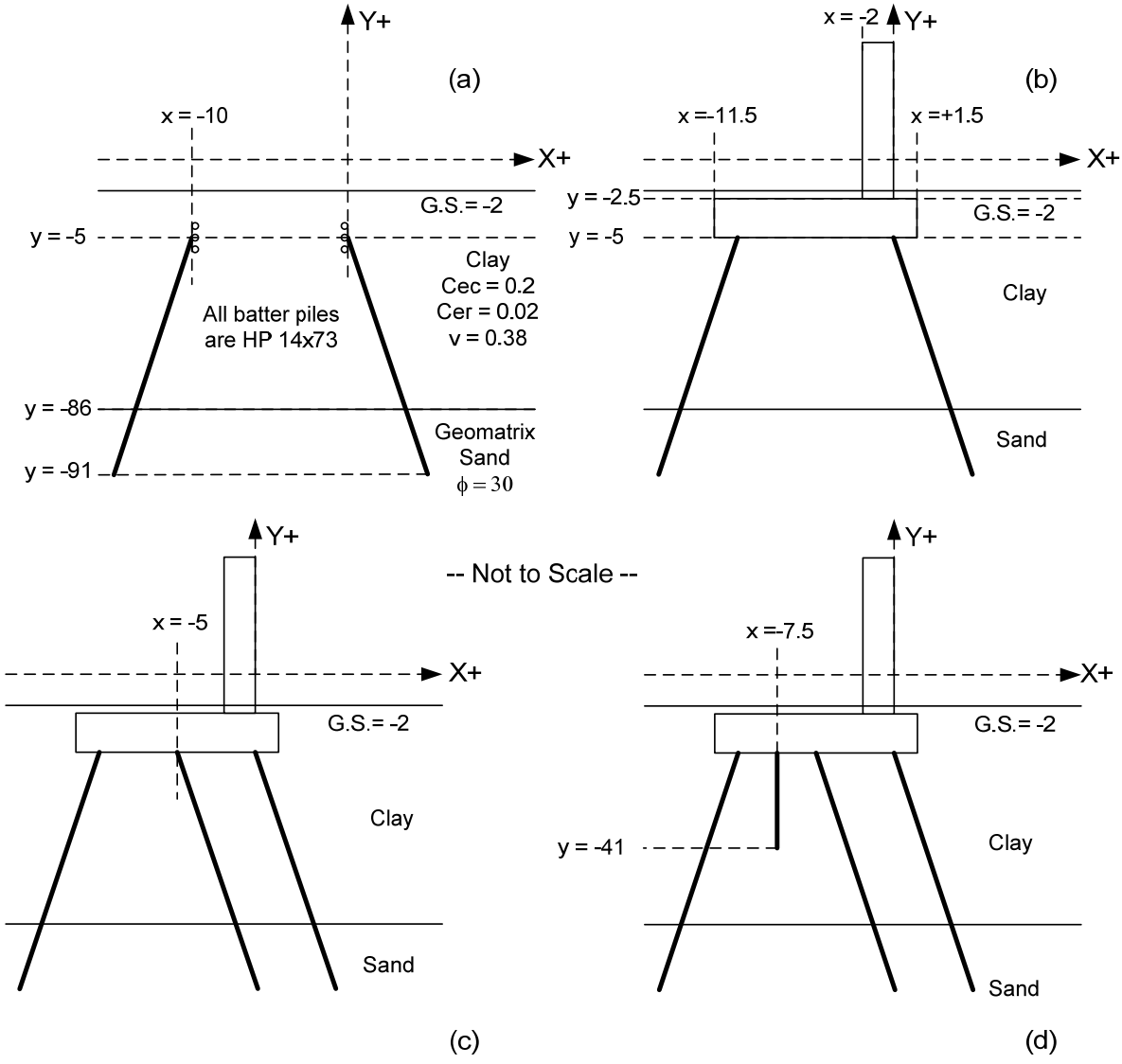

Figure 9: (a) Pair of batter piles with roller supports, (b) Pair of batter piles pinned at base of T-Wall footing, (c) Three batter piles pinned at base of T-Wall footing, (d) Three batter piles plus sheet pile pinned at base of T-Wall footing

Table 11: FLAC Runs in Parametric Study

CASE	Geometry	Flood-side, FS, Fill (psf)	Protected-side, PS, Fill (psf)	FS pile M_{max} (k-ft)	Middle pile M_{max} (k-ft)	FS pile M_{max} (k-ft)
1	a	660	660	112	--	-111
2	a	330	330	57	--	-57
3	a	990	990	164	--	-164
4	b	330	330	63	--	-52
5	b	660	660	117	--	-100
6	b	990	990	168	--	-148
7	b	330	0	88	--	27
8	b	660	0	120	--	-39
9	b	990	0	120	--	-58
10	c	660	660	116	44	-84
11	c	660	0	159	57	47
12	d	660	660	86	44	-96
13	d	660	0	136	51	42
14	a (all clay)	660	660	118	--	-117
15	d (all clay)	660	660	100	-59	-109
16	c	330	0	88	32	27
17	c	990	0	216	76	64
18	b	1320	0	118	--	-78
19	c	1320	0	270	94	79
20	b	165	0	45	--	18
21	c	165	0	42	16	15
22	b	495	0	111	--	-30
23	c	495	0	126	45	37
24	b	825	0	120	--	-49
25	c	825	0	188	67	56
26	b	1155	0	118	--	-67
27	c	1155	0	246	86	72
28	b	1320	1320	229	--	-190.4
29	c	330	330	61	27	-47
30	c	990	990	162	61	-114
31	c	1320	1320	205	77	-149
32	b	165	165	30	--	-21
33	c	165	165	27	17	-21
34	b	495	495	94	--	-78
35	c	495	495	92	37	-68
36	b	825	825	147	--	-119
37	c	825	825	141	54	-98
38	b	1155	1155	204	--	-167
39	c	1155	1155	184	69	-130

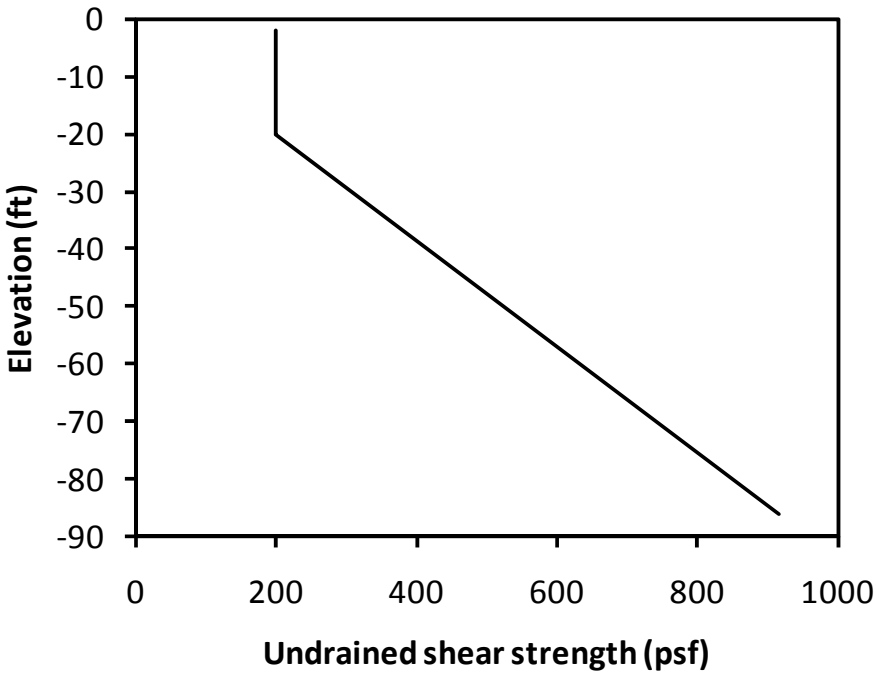

Figure 10. Undrained shear strength of clay layer in the FLAC model

Table 12. Property values for the clay used in the FLAC model

Property	Value
Total Unit Weight	112.4 pcf
Effective Cohesion	0 psf
Effective Friction Angle	23 degrees
Compression Ratio	0.20
Recompression Ratio	0.02
Poisson's Ratio	0.38

3.4.1 Effect of Piles on Soil Settlements

The stiffening effect of the piles was investigated in two ways: 1) by comparing hand calculations of soil compression, *C*, without piles present to FLAC calculations of soil compression, $C_{FLAC,}$ with piles present using geometry (b) in Figure 9 and 2) by comparing the value of *C* to the magnitude of vertical soil compression, $P_{y,FLAC}$, whose normal component, when applied to the p-y spring supports in LPILE, produces the same value of the maximum moment as predicted in FLAC.

Using the first approach, it is necessary to select a consistent location to compare the hand-calculated compression to the FLAC compression for the comparison to be valid. A vertical profile that intersects the pile at 25 percent of the vertical distance from the base of the T-Wall footing to the top of the bearing layer was selected because it is near the point along the pile that experiences the maximum bending moment. This location is a horizontal distance X measured from the location where the pile intersects the T-Wall base. For the conditions shown in Figure 2, $X = 0.25L_c\sin(\beta)$, and for the conditions shown in Figure 3, $X = 0.25(L_e + L_c)\sin(\beta)$. Soil compression along this profile can be computed using ordinary geotechnical procedures for estimating 1-D consolidation beneath a finite located area. The fill overlying the base of the T-Wall is excluded from the soil compression since this material is primarily supported by the T-Wall and piles, and it does not impose a significant surcharge to the foundation soil. When the hand calculation is performed for the profile a distance X from the flood-side batter pile, the resulting compression is referred herein as C_{FS}. When the corresponding calculation is performed a distance X from the outer protected-side batter pile, the resulting compression is referred herein as C_{PS}. For the development of the LPILE Method, the value of C_{FS} was compared to the flood-side compression determined using FLAC, $C_{FS,FLAC}$, for geometry (b) with symmetric fill loading. For symmetric embankment loading, an equivalent comparison using compressions on the protected-side would be essentially the same. The comparison of C_{FS} to $C_{FS,FLAC}$ in Figure 11 shows that the stiffening effect of the piles significantly reduces the magnitude of compression relative to the case where no piles are present. This comparison is important because the basic LPILE Method was validated against the experimental results using reported values of settlement that were influenced by the stiffening effect of the piles. If compressions determined by hand were used instead of the reported values of settlement, it is likely that the LPILE Method would have predicted moments that were significantly higher than the measured values.

Another way to observe the stiffening effect of the piles on soil compression is to compare the magnitude of vertical soil compression, $P_{y,FLAC}$, whose normal component, when applied to the p-y spring supports in LPILE, produces the same maximum moment as predicted in FLAC for the flood-side batter pile. The moment in the flood-side pile is used for this comparison because, as described in Section 3.4.2, it experiences higher bending moments than the protected-side pile for symmetric loading. The approach of basing the stiffening effect of the piles on $P_{y,FLAC}$ is different from the $C_{FS,FLAC}$ approach described above in that $P_{y,FLAC}$ is a fixed value for a particular set of conditions whereas C and $C_{FS,FLAC}$ depend on the location of the vertical profile over which compression is evaluated. This feature makes $P_{y,FLAC}$ a benchmark that, unlike $C_{FS,FLAC}$, is not sensitive to the choice of profile location. The dashed line in Figure 11 shows the relationship between C_{FS} and $P_{y,FLAC}$ using the results from the FLAC parametric study.

From Figure 11, it can be seen that the relationships comparing C_{FS} with $C_{FS,FLAC}$ and $P_{y,FLAC}$ are quite similar, particularly at lower magnitudes of C_{FS}. This suggests that selection of the location for calculating compressions, i.e., the location at a distance X from where the flood- or protected-side pile intersects the T-Wall base, is fairly representative of the vertical soil movements applied in LPILE to generate moments that are in agreement with the FLAC results (i.e. $C_{FS,FLAC} \approx P_{y,FLAC}$). It would be reasonable to base the stiffening effect of the piles on $C_{FS,FLAC}$

because this would be consistent with the way that the LPILE Method was validated against the field and laboratory data, although the selection of the location for calculating C_{FS} is somewhat arbitrary. It would also be reasonable to base the stiffening effect of the piles on $P_{y,FLAC}$ because the USACE has developed confidence in using FLAC to calculate soil-structure interactions for pile-supported T-walls. For these reasons, and because the values of $C_{FS,FLAC}$ and $P_{y,FLAC}$ are similar, a composite relationship, as shown in Figure 12, is used in the complete LPILE Method described in this report. As described in Section 3.4.4, when the embankment fill is asymmetric, the greater of the calculated compressions calculated on the flood and protected sides, C_{gr}, is used in the LPILE analysis. For symmetric embankment loading, $C_{gr} = C_{FS} = C_{PS}$.

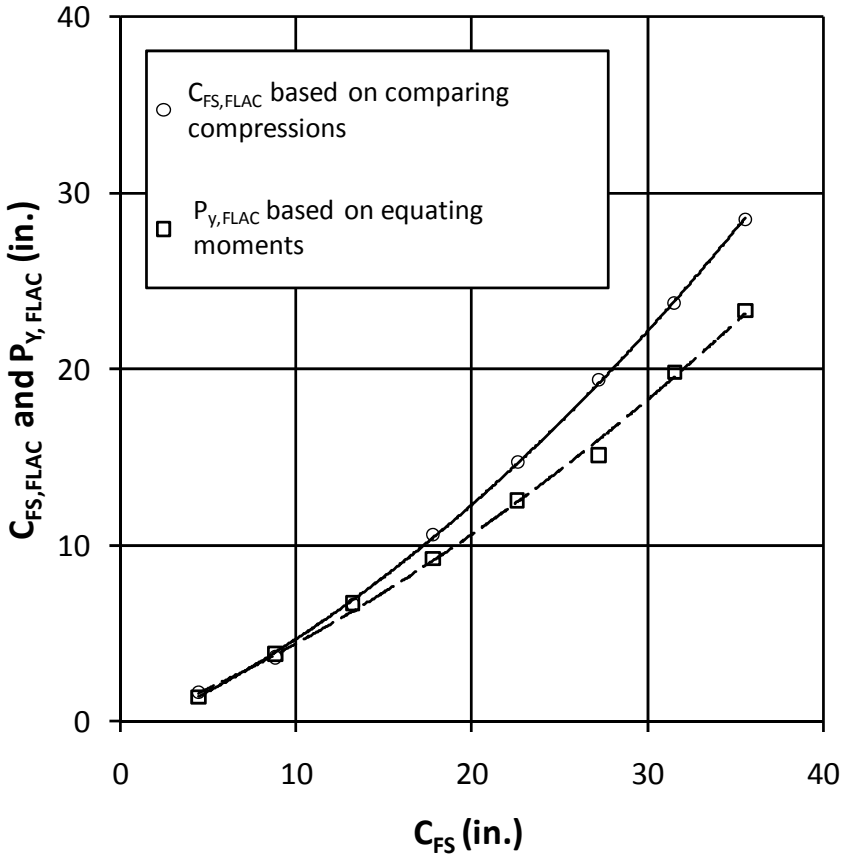

Figure 11: Solid line = relationship between C_{FS} and $C_{FS,FLAC}$, Dashed line = relationship between C_{FS} and $P_{y,FLAC}$

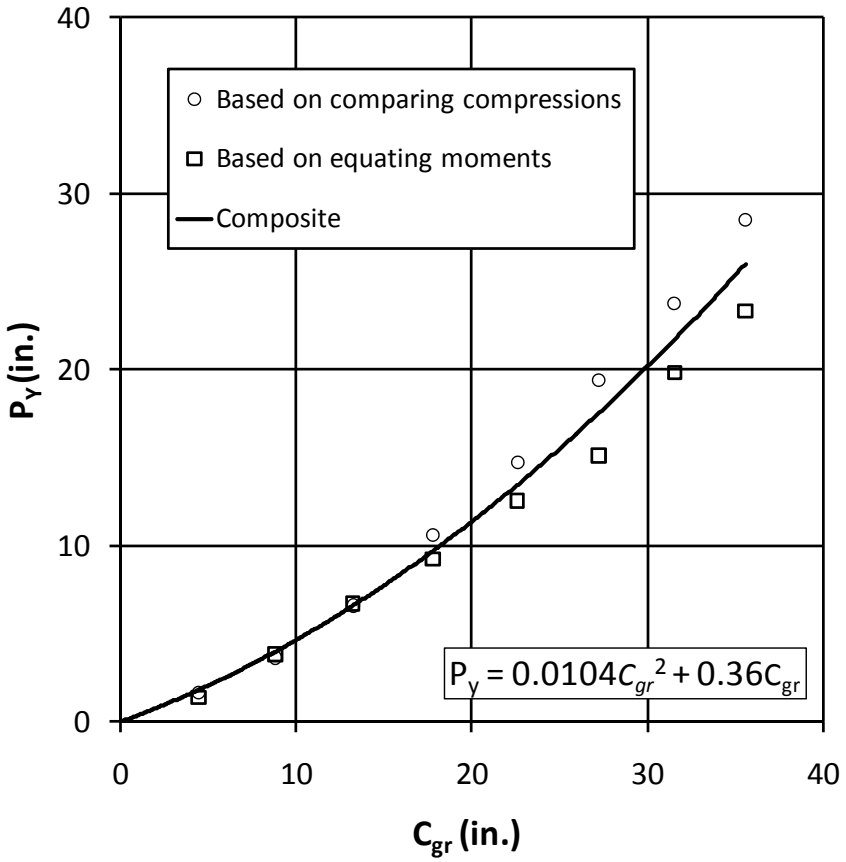

Figure 12: Relationship between C_{gr} and P_y to account for stiffening effect of piles on compression

3.4.2 Effect of T-Wall

The presence of the T-Wall can influence downdrag-induced bending moments by: 1) shielding foundation soils in the vicinity of the piles from the full surcharge pressure produced by the embankment and 2) moving the tops of the batter piles by the effect of frame action between the piles and the T-Wall footing.

The shielding effect of the T-wall can be evaluated by comparing the results listed in Table 11 for Cases 2, 1, and 3 for fill pressures of 330, 660, and 990 psf, respectively, with the average absolute value of maximum moment for the flood-side and protected-side piles for Cases 4, 5, and 6. This comparison shows that the shielding effect of the T-wall does not produce much change in the maximum bending moments. The lack of a shielding effect may be due, in part, to the fact that the maximum bending moments in the batter piles occur at about Elevation -20 ft, which is beyond the T-wall limits for the batter piles. Also, while the addition of the fill load between the piles for Cases 1, 2, and 3 generates additional vertical settlement, which increases bending moments, the lack of shielding for these cases reduces the inward lateral component of soil movement produced by the fill beyond the T-Wall, thus reducing bending moments. The LPILE Method for symmetric fill was calibrated using only vertical soil

movements, P_y, and the fill overlying the T-Wall base is not included in the compression calculations. This approach yields good agreement between the FLAC and LPILE moments, and it is conservative because the fill loads in the FLAC analyses were imposed by surcharge pressures instead of fill soil, which tends to reduce the shielding effect.

The effect of frame action between the batter piles and the T-Wall base can be evaluated by comparing the maximum bending moments in the flood-side and protected-side batter piles when the embankment fill is symmetrical. The frame action develops due to the effect of the eccentric location of the wall stem. Figure 13 shows the absolute value of the maximum bending moments in the flood-side and protected-side batter piles determined using FLAC for Geometry (b) versus the applied surcharge pressure. The figure shows that the maximum bending moments are higher, on average by about 15 percent, for the flood-side batter pile than for the protected-side pile. Therefore, for the conditions evaluated using symmetric loading, the critical pile for down-drag induced bending moments is the flood-side batter pile.

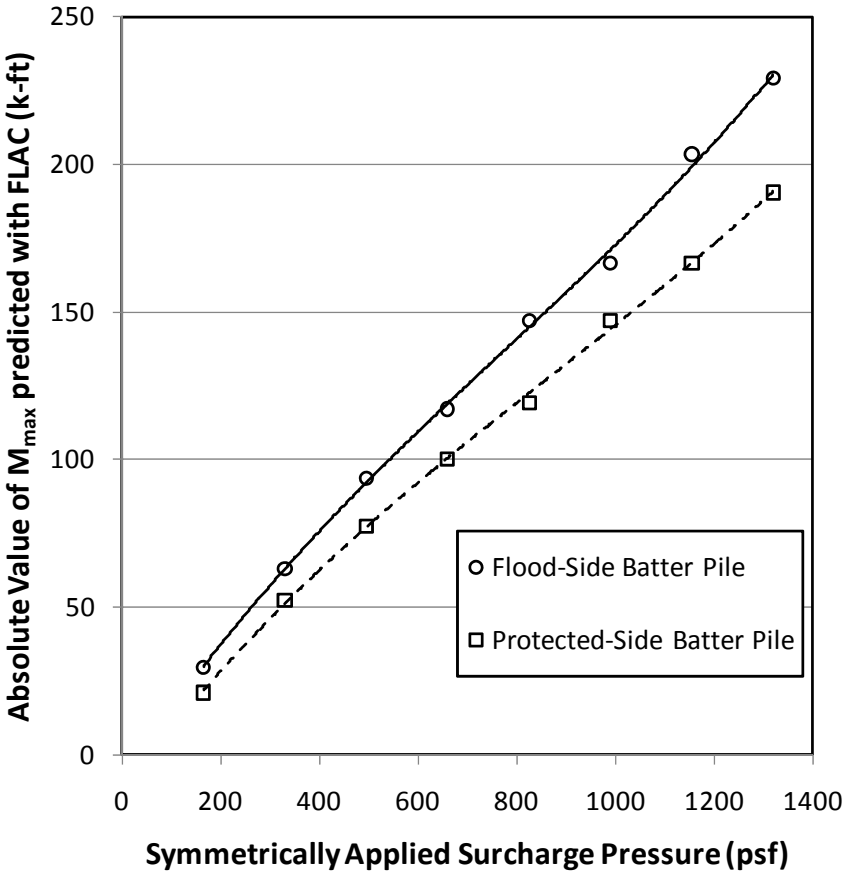

Figure 13: Absolute value of the maximum bending moment in the flood-side and protected-side batter piles determined using FLAC for Geometry (b) and symmetric fill versus surcharge pressure

3.4.3 Effect of Additional Piles

The FLAC analyses performed using Geometries (c) and (d) permitted evaluating the effect of a middle batter pile and a sheet pile cut-off on downdrag-induced bending moments. Figure 14 shows that, for symmetric loading, the presence of the middle batter pile has very little influence on the bending moment in the flood-side batter pile. It can be concluded that the middle batter does not need to be considered in the LPILE analysis when the fill is symmetric.

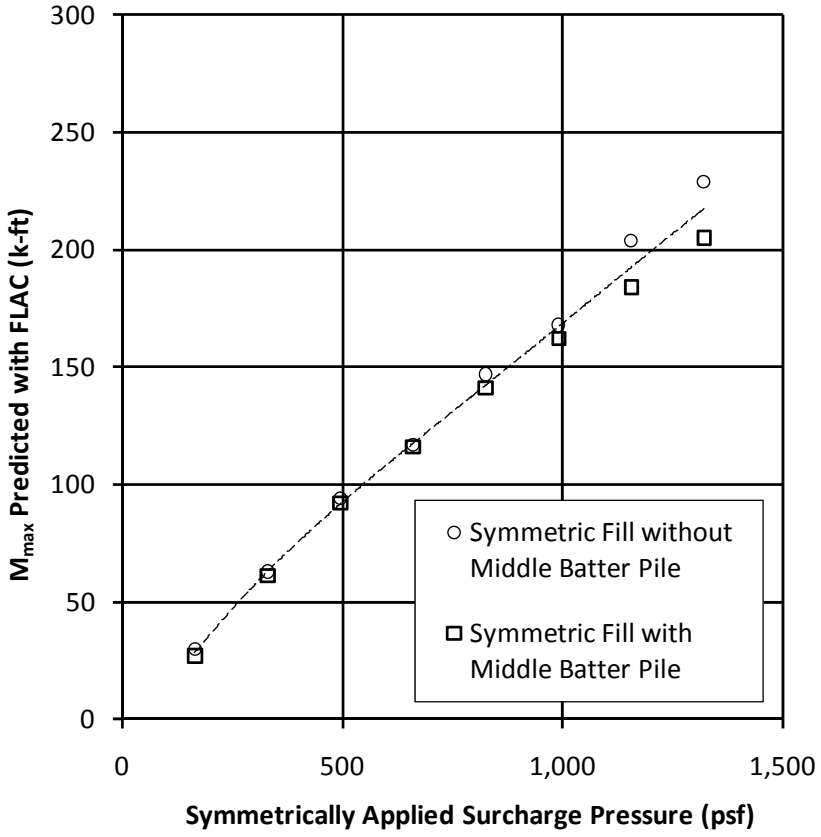

Figure 14: Influence of middle batter pile on maximum moment in the flood-side batter pile

Figure 15 shows the influence of the middle batter pile on moments produced in the protected-side pile when the fill is symmetric. The figure shows that the middle batter pile reduces moments in the protected-side pile. Since the flood-side pile was determined in Section 3.4.2 to be the critical pile in the analysis for symmetric loading, the influence of the middle batter pile does not need to be considered in the LPILE Method.

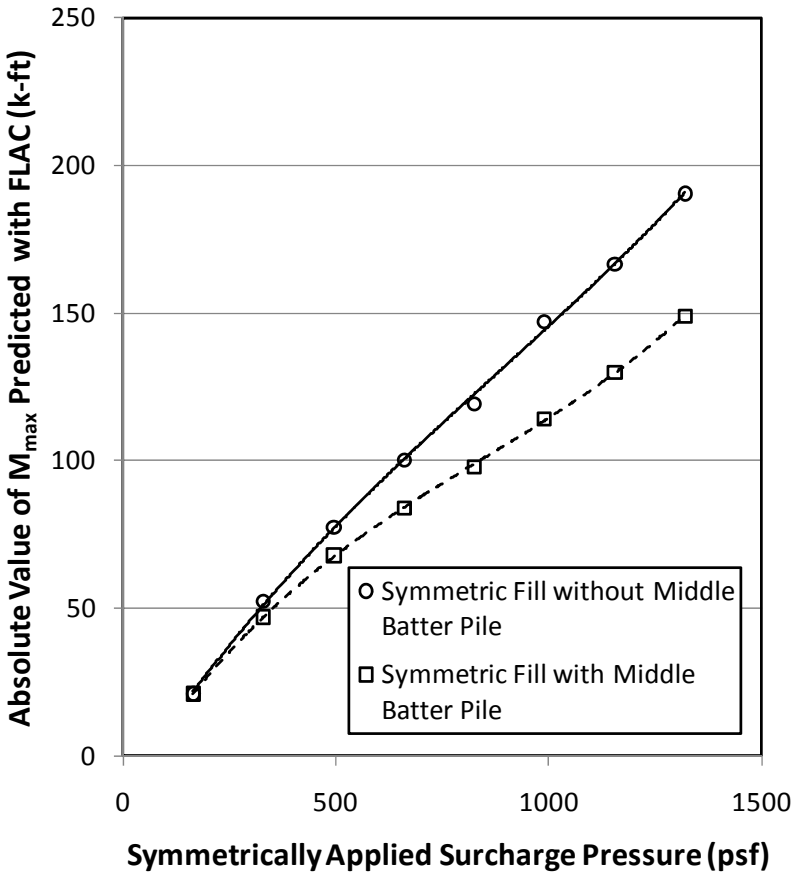

Figure 15: Influence of middle batter pile on maximum moment in the protected-side batter pile

The influence of the sheet pile cut-off for cases with symmetric fill can be evaluated by comparing Case 10 with the results of Case 12. From these cases it is seen that the sheet pile cutoff wall reduces maximum bending moments. The magnitude of this reduction is expected to be sensitive to the depth and the lateral position of the sheet pile with respect to the battered piles, and its influence can be conservatively neglected from the LPILE Method.

3.4.4 Effect of Fill Asymmetry

The FLAC analyses permit consideration of cases where the magnitude and/or lateral extend of the embankment fill on the flood and protected sides of the T-Wall is asymmetric and results in $C_{FS} \neq C_{PS.}$ When the embankment loading is asymmetric, there can be horizontal soil displacement that acts on the piles and the T-Wall. Figure 16 shows the combinations of symmetric and asymmetric fill for T-Walls with and without a middle batter pile extending to the protected side. The FLAC analyses listed in Table 11 directly evaluated Cases (i),(ii), (iii), and (iv). If the influence of the asymmetric T-Wall stem on moments in the protected-side pile described in Section 3.4.2 is conservatively ignored, the FLAC analyses also can be used to evaluate Case (v) by applying the findings from the FLAC runs applicable to Case (iii). Similarly, it is believed that the findings from the FLAC runs applicable to (iv) can be conservatively applied

to Case (vi). Table 13 summarizes the embankment loading cases and the applicability of the LPILE Method.

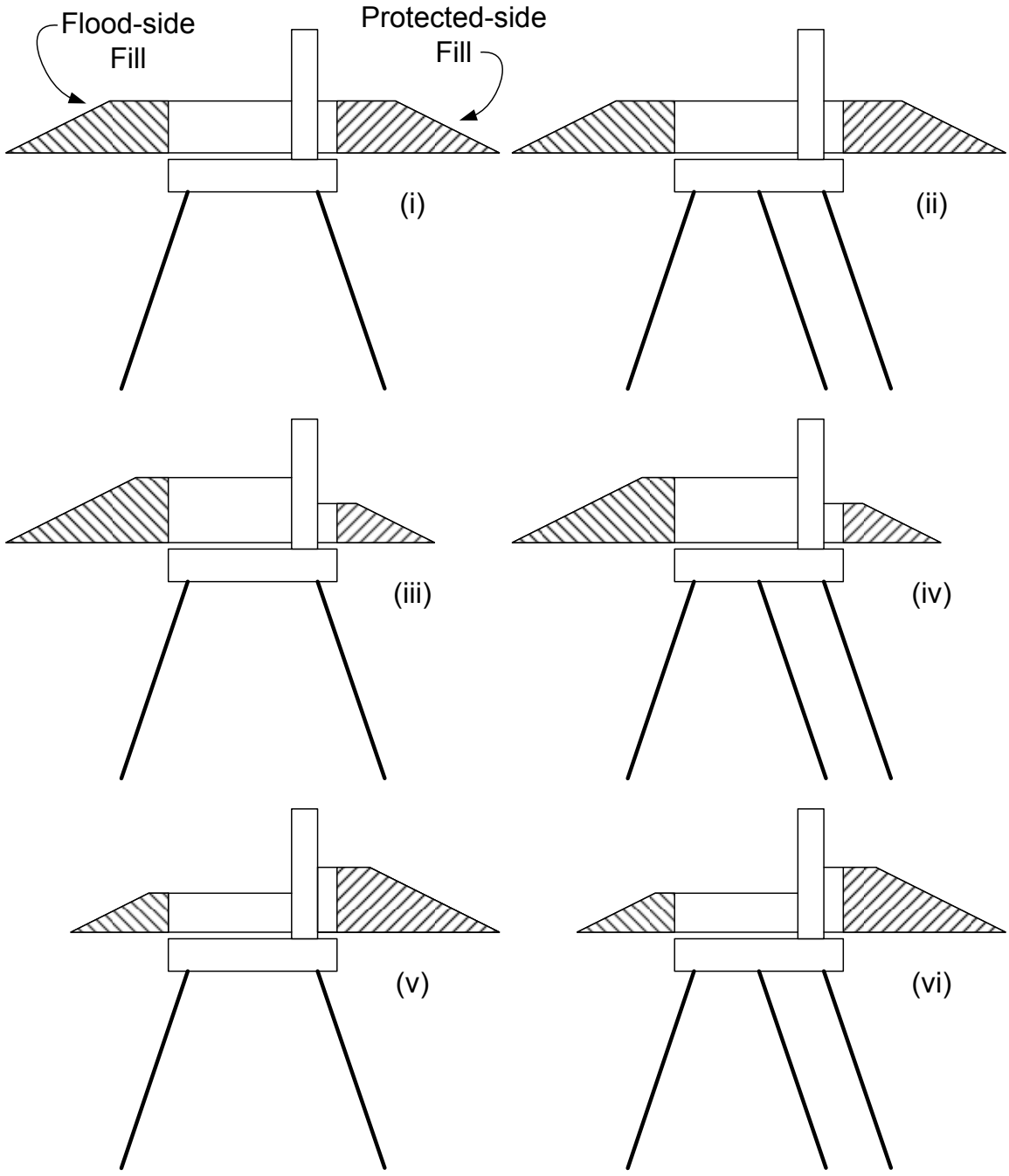

Figure 16: Various embankment loading cases for T-Walls with and without a middle batter pile

Table 13: Applicability of LPILE Method to loading cases shown in Figure 13

Case	Loading and Piling Conditions	Greater Compression, C_{gr}	Lesser Compression, C_{ls}	LPILE Method Directly Applicable?	Pile Considered in Analysis
i	Symmetric, middle batter pile not present	$C_{FS} = C_{PS}$	$C_{FS} = C_{PS}$	Yes	FS batter pile
ii	Symmetric, middle batter pile present	$C_{FS} = C_{PS}$	$C_{FS} = C_{PS}$	Yes	FS batter pile
iii	Fill produces more compression on flood side, middle batter pile not present	C_{FS}	C_{PS}	Yes	FS batter pile
iv	Fill produces more compression on flood side, middle batter pile present	C_{FS}	C_{PS}	Yes	FS batter pile
v	Fill produces more compression on protected side, middle batter pile not present	C_{PS}	C_{FS}	No, but approach for Case (iii) can be applied	PS batter pile
vi	Fill produces more compression on protected side, middle batter pile present	C_{PS}	C_{FS}	No, but approach for Case (iv) can be applied	Outer PS batter pile

The horizontal soil displacements resulting from asymmetric fill loading increase the bending moment in the outside batter pile on the side with the larger fill load. The horizontal soil displacements also push the T-Wall away from the side with greater fill load, resulting in lateral displacement of the pile head that tends to "unbend" the batter pile on the side with more load, thereby reducing the bending moment compared to the bending moment that would occur without displacement of the T-Wall away from the load. The net effect of the increased soil movement acting on the pile and translation of the pile head depends on the magnitude of unbalanced embankment load and the amount of resistance provided by the T-Wall foundation against lateral movement. As part of the overall parametric study, FLAC analyses were performed to investigate these counter-acting influences for cases with and without a middle batter pile across a range of unbalanced loads. Figure 17 shows the FLAC results for bending moment in the flood-side batter pile for symmetric and asymmetric fill loading with and without a middle batter pile (Cases (i), (ii), (iii), and (iv)).

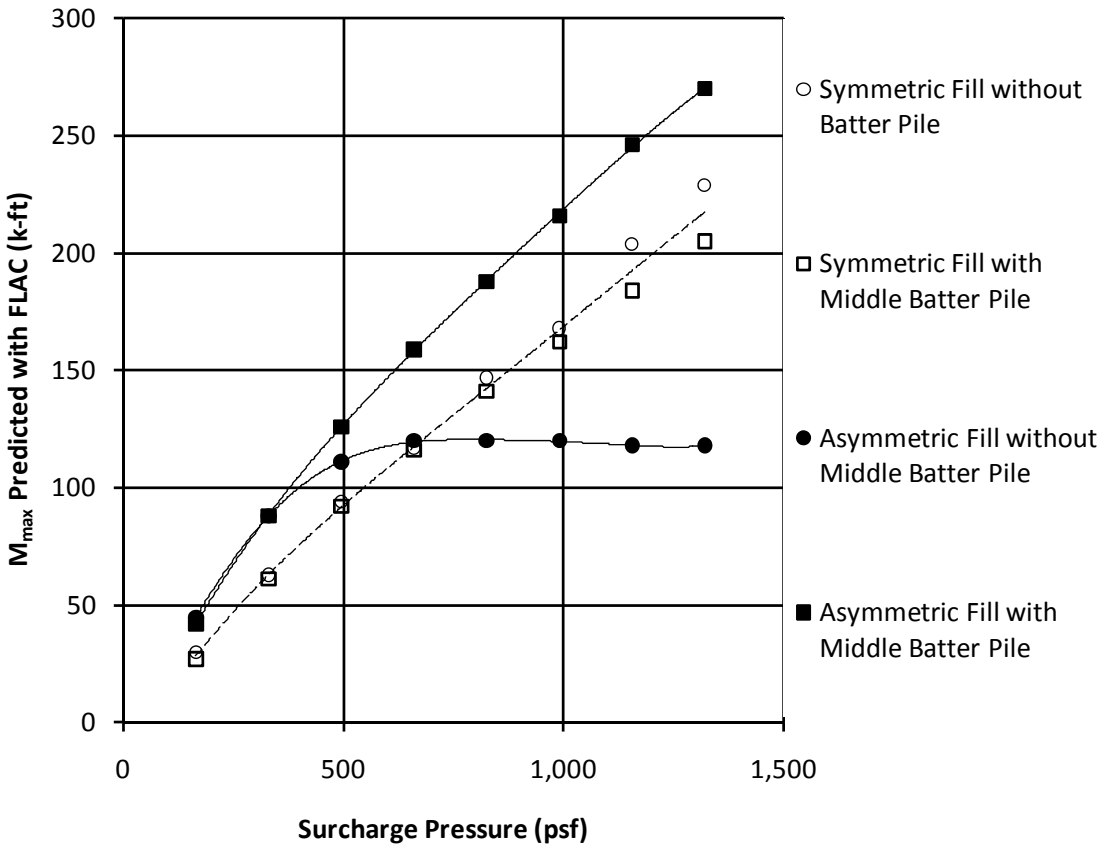

Figure 17: Maximum moments in flood-side batter pile from FLAC analyses versus surcharge pressure applied symmetrically or asymmetrically (only on the flood side)

Figure 17 shows that, when the fill is asymmetric, the presence of the middle batter pile can have a profound influence on bending moments. The two batter piles on the protected side create a pile couple which gives the T-Wall far greater resistance to rotation and translation than when just one pile is present on the protected side. At low magnitudes of asymmetric loading, the increase in bending moment due to lateral soil movement dominates the moment reduction due to "unbending" of the flood side pile for cases with and without the middle pile. As the magnitude of the asymmetry increases, the T-Wall begins to translate significantly for the case without the middle pile, and the moment reduction due to "unbending" the flood-side pile counteracts the increased bending moment due to increased lateral displacement of the soil. For T-Walls with middle piles, the restraint produced by the middle pile reduces the potential for "unbending" such that lateral soil movement continues to dominate at high asymmetric fill pressures, and the bending moment on the flood-side pile continues to increase.

The influence of the sheet pile cut-off for cases with asymmetric fill can be evaluated by comparing Case 11 with the results of Case 13. From these cases it is seen that the sheet pile cutoff wall reduces maximum bending moments. The magnitude of this reduction is expected

to be sensitive to the depth and the lateral position of the sheet pile with respect to the battered piles, and its influence can be conservatively neglected from the LPILE Method.

Table 14 summarizes the findings of the parametric study with respect to fill asymmetry and the presence of additional piles.

Table 14: Significance of various influences on maximum bending moment in the flood-side pile relative to the case with symmetric fill without a middle batter pile

Factor	Fill condition	Influence	Significant to LPILE Method analysis
Fill asymmetry without middle batter pile	Asymmetric	Increase at low surcharge pressures and reduction at high surcharge pressures	Yes
Presence of middle batter pile	Symmetric	Small reduction at high surcharge pressure	No
Presence of middle batter pile	Asymmetric	Significant increase at high surcharge pressure	Yes
Presence of sheet pile cut-off	Symmetric	Small reduction	No
Presence of sheet pile cut-off	Asymmetric	Small reduction	No

To account for fill asymmetry, the magnitude of soil movement applied at the top of the pile, Δ_o, was determined so that the maximum moment from the LPILE Method would agree with the maximum moment in the flood-side batter pile from the FLAC analyses for cases with asymmetric fill with and without the middle batter pile. The total magnitude of soil movement normal to the pile that is necessary to achieve this agreement was compared to the component of soil movement normal to the pile due to vertical compression, $P_y(sin\beta)$. The net influence of the fill asymmetry can be incorporated in the LPILE Method by determining the magnitude of lateral soil movement, P_x, such that

$$P_x = [\Delta_o - P_y(\sin\beta)]/\cos\beta \quad (3)$$

where Δ_o is the total soil movement applied at the top of the pile in LPILE so that $M_{max,LPILE} = M_{max,FLAC}$

The value of P_x determined using the approach described above was compared to the difference between C_{gr} and C_{ls}. Figure 18 shows the result of this comparison for cases with and without a middle batter pile. As indicated by Equation 3, the contribution of P_x to the normal soil movement used in LPILE is determined by multiplying the value of P_x by the cosine of the batter angle. More lateral soil movement is needed in LPILE for T-walls supported by three piles than for T-walls supported by two piles, reflecting the ability of the pile couple on the protected side to resist T-wall rotation, thereby reducing the potential for side-sway of the pile and T-wall

system. When only two piles support the T-wall, the increased lateral movement of the T-wall reduces the relative lateral movement between the soil and the piles, thereby reducing the effect of asymmetric load on pile bending moments compared to T-walls supported by three piles.

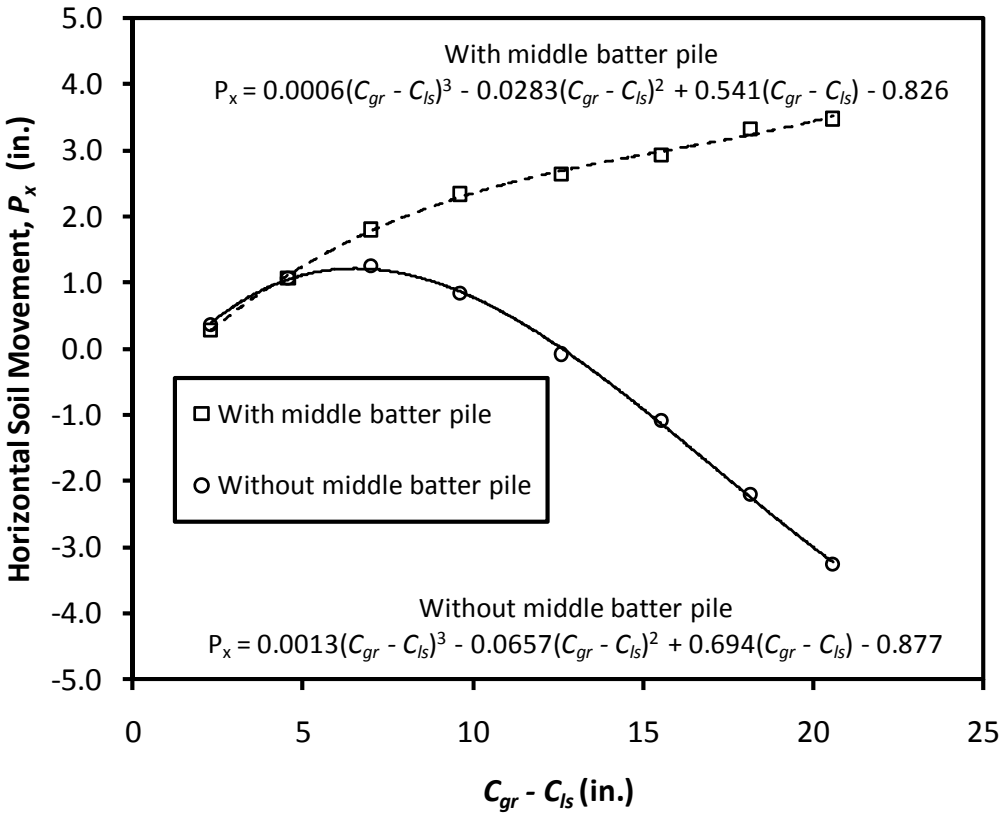

Figure 18: Horizontal soil movement applied in LPILE analysis due to net effect of asymmetric fill

3.4.5 Effect of an All Clay Profile

The effect of an all clay profile without a sand bearing layer can be seen by comparing Cases 1 and 14 and by comparing Cases 12 and 15, which both show that the maximum moment is larger for an all clay profile. The average increase in maximum moment for these two comparisons is about 11 percent.

3.5 Comparison of LPILE Method with FLAC Results

The complete LPILE Method was compared to the FLAC analyses described in Section 3.4. The cases considered were: Cases 4, 5, 6, (symmetric fill without a middle batter pile), Cases 7, 8, 9 (asymmetric fill without a middle batter pile), and Cases 11, 16, and 17 (asymmetric fill with a middle batter pile). Figure 19 shows the comparison of the moment diagrams using the LPILE Method to the moment diagrams from FLAC for Cases 4, 5, and 6, Figure 20 shows the comparison for Cases 7, 8, and 9, and Figure 21 shows the comparison for Cases 11, 16, and 17.

It can be seen that the agreement between the maximum moment values determined from the LPILE Method and FLAC is quite good.

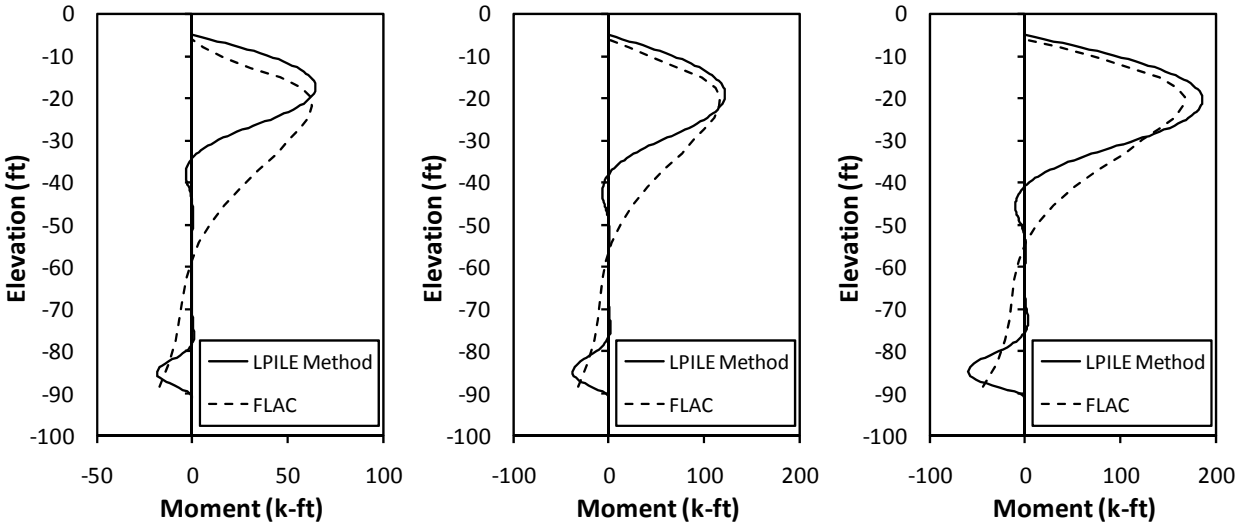

Figure 19: (left to right) Bending moment diagrams for Cases 4, 5, and 6 from the LPILE Method and FLAC

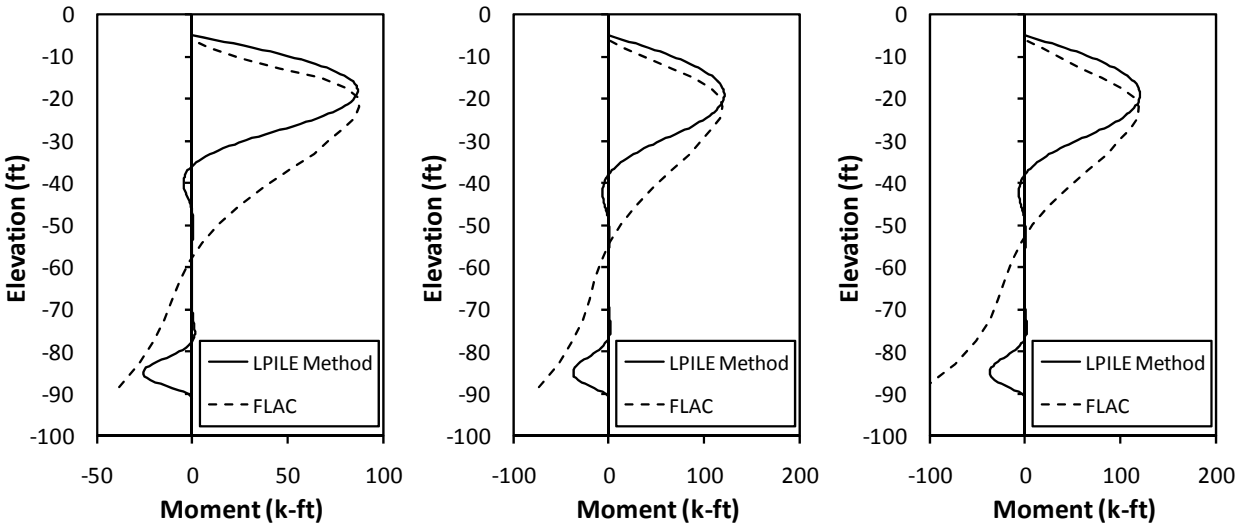

Figure 20: (left to right) Bending moment diagrams for Cases 7, 8, and 9 from the LPILE Method and FLAC

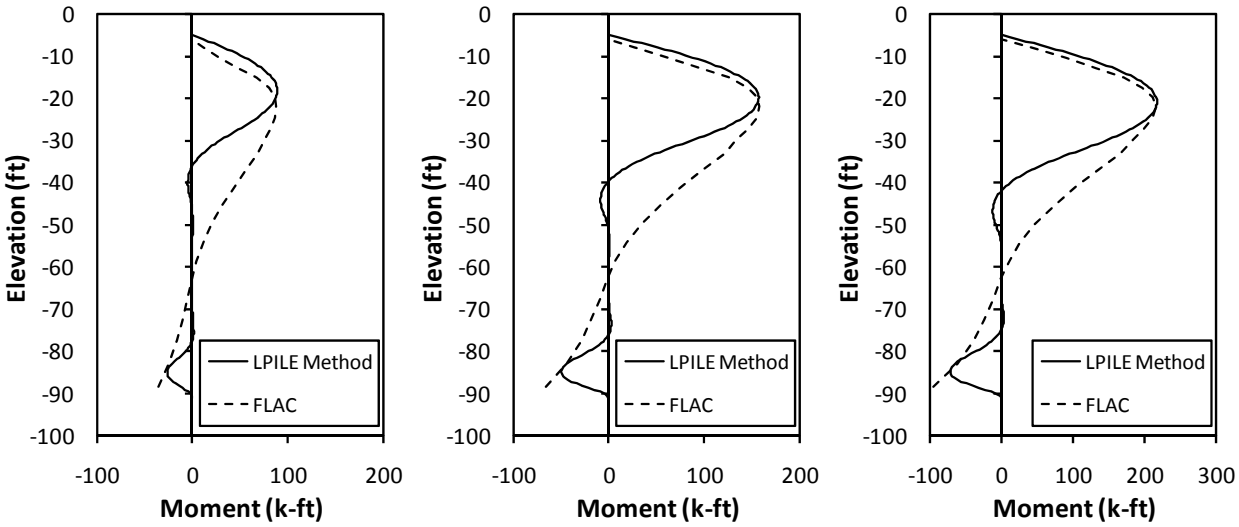

Figure 21: (left to right) Bending moment diagrams for Cases 7, 8, and 9 from the LPILE Method and FLAC

4.0 Procedure

4.1 Introduction

This section outlines the LPILE Method for calculating bending moments induced in batter piles for T-Walls subject to downdrag. The method was developed for practical use by designers of USACE T-Walls in the New Orleans area, and it is based on the assumptions listed in Table 15. The bending moments determined using this approach are only the moments due to downdrag. Additional bending moments may be produced by other factors, such as flood loading.

This section is arranged for designers familiar with the development and limitations of the LPILE Method to use this section as a standalone document. Accordingly, the some of the figures and tables that appear elsewhere in the report are repeated here.

Table 15: Assumptions used to develop a method for calculating downdrag-induced bending moments

	Assumptions
1	The foundation soils consist primarily of compressible clay overlying a sand bearing layer, as shown in Figures 22 and 23. The model was developed considering a clay layer extending 84 ft below the ground surface at El -2, with batter piles extending from the bottom of the T-wall, which is at El -5, to El -91.
2	The piles are battered at 3H:1V, corresponding to a batter angle, β, of 18.4^{o} from vertical.
3	For symmetric embankment loading and for asymmetric loading resulting in more soil compression on the flood side of the T-Wall, the down-drag induced bending moment in the flood-side pile is considered to be critical.
4	For asymmetric loading resulting in more soil compression on the protected side, the bending moment in the protected-side pile is considered to be critical. Reductions of bending moment in the protected-side pile due to asymmetry of the T-Wall stem and middle batter pile are ignored.
5	For T-Walls located within an embankment, as shown to Figure 23, the compression of the embankment material is considered to be insignificant compared to the compression of the underlying soft clay.
6	The clay is slightly overconsolidated near the ground surface but is otherwise normally consolidated.
7	The connection of the piles to the T-Wall has little moment resistance and can be reasonably approximated by a pin support.
8	Axial loading in the pile does not significantly impact the downdrag-induced bending moments, i.e., the P-Δ effect is not included in this method.
9	Soil movement normal to the pile axis is responsible for the downdrag-induced bending moments.

The terminology shown in Figures 22 and 23 is used to identify the relevant components and dimensions of the T-Wall and embankment system. The LPILE Method can be used for the embankment loading conditions shown in Figure 24 and described in Table 16 for cases when the T-Wall base is below the embankment as shown in Figure 22 or within the embankment as shown in Figure 23. Whether the embankment loading is symmetric or asymmetric is determined by comparing the magnitude of hand calculated compressions on the flood and protected sides without considering the fill overlying the T-Wall base. The influence of fill asymmetry was evaluated during the development of the LPILE Method by examining the moments in the flood-side batter pile resulting from fill applied to the flood-side only. For conditions where fill asymmetry results in more compression on the protected-side, as in Cases (v) and (vi), the LPILE Method is expected to produce conservative results due to the influences of the asymmetric T-Wall stem and the middle batter pile on moments in the outer protected-side pile.

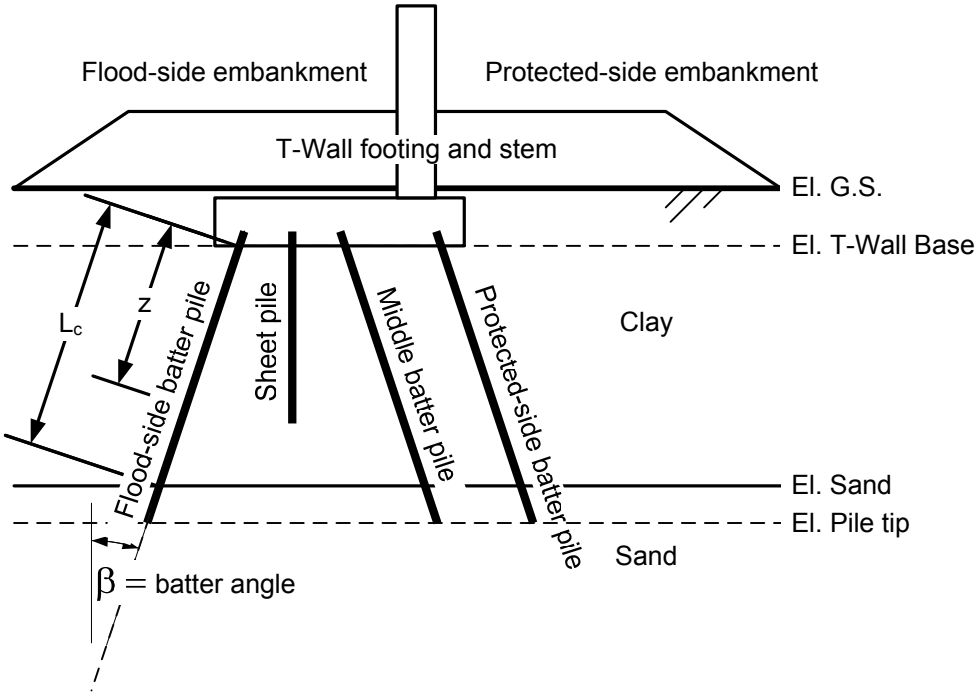

Figure 22: Layout of T-Wall with base below embankment

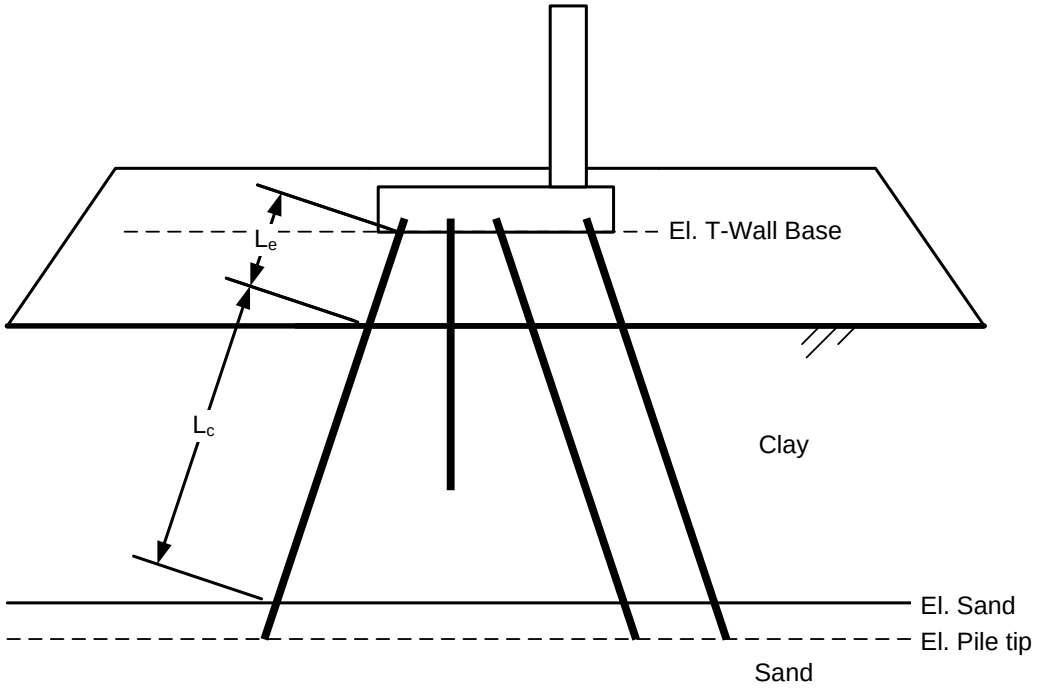

Figure 23: Layout of T-Wall with base in embankment

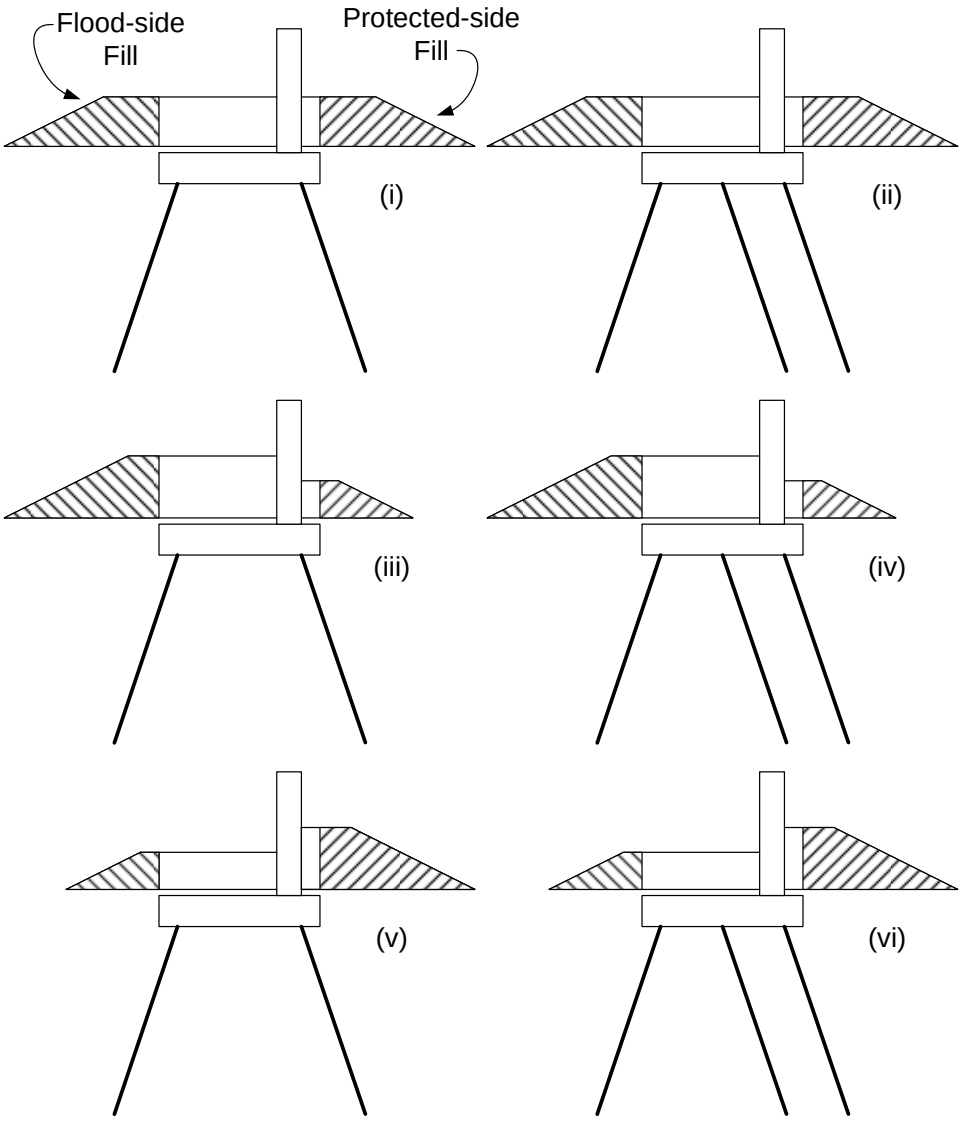

Figure 24: Various embankment loading cases for T-Walls with and without a middle batter pile

Table 16: Loading cases for LPILE Method shown in Figure 3

Case	Loading and Piling Conditions
i	Symmetric, middle batter pile not present
ii	Symmetric, middle batter pile present
iii	Fill produces more compression on flood side, middle batter pile not present
iv	Fill produces more compression on flood side, middle batter pile present
v	Fill produces more compression on protected side, middle batter pile not present
vi	Fill produces more compression on protected side, middle batter pile present

4.2 Step-by-Step Procedure

1. Calculate the compression, *C*, of the soil from the bottom of the T-wall to the top of the bearing layer due to the embankment surcharge using ordinary geotechnical analysis procedures, without considering the stiffening effect of the batter piles. The soil compression calculations should be performed at the plan view locations on the flood side and protected sides where the outer battered piles intersect the elevation corresponding to 25% of the depth from the bottom of the T-wall to the top of the bearing layer. The compression calculated on the flood side, C_{FS}, should be compared to the value on the protected side, C_{PS}, according to Table 17 to determine whether the loading is symmetric or asymmetric. The weight of the T-wall and the fill directly overlying the T-wall base is not included in the settlement calculations. If compacted embankment fill exists underneath the T-wall, as shown in Figure 23, the embankment fill can be considered relatively incompressible compared to the underlying soft clay.

Table 17: Evaluation of embankment loading case using flood-side and protected-side compressions

Case	Greater Compression, C_{gr}	Lesser Compression, C_{ls}
i	$C_{FS} = C_{PS}$	$C_{FS} = C_{PS}$
ii	$C_{FS} = C_{PS}$	$C_{FS} = C_{PS}$
iii	C_{FS}	C_{PS}
iv	C_{FS}	C_{PS}
v	C_{PS}	C_{FS}
vi	C_{PS}	C_{FS}

2. Determine the vertical soil movement, P_y, to be applied in the LPILE Method using the greater value of the flood-side and protected-side compressions, C_{gr}, determined in Step 1 and Figure 25 to account for the stiffening effect of the piles on soil compression.

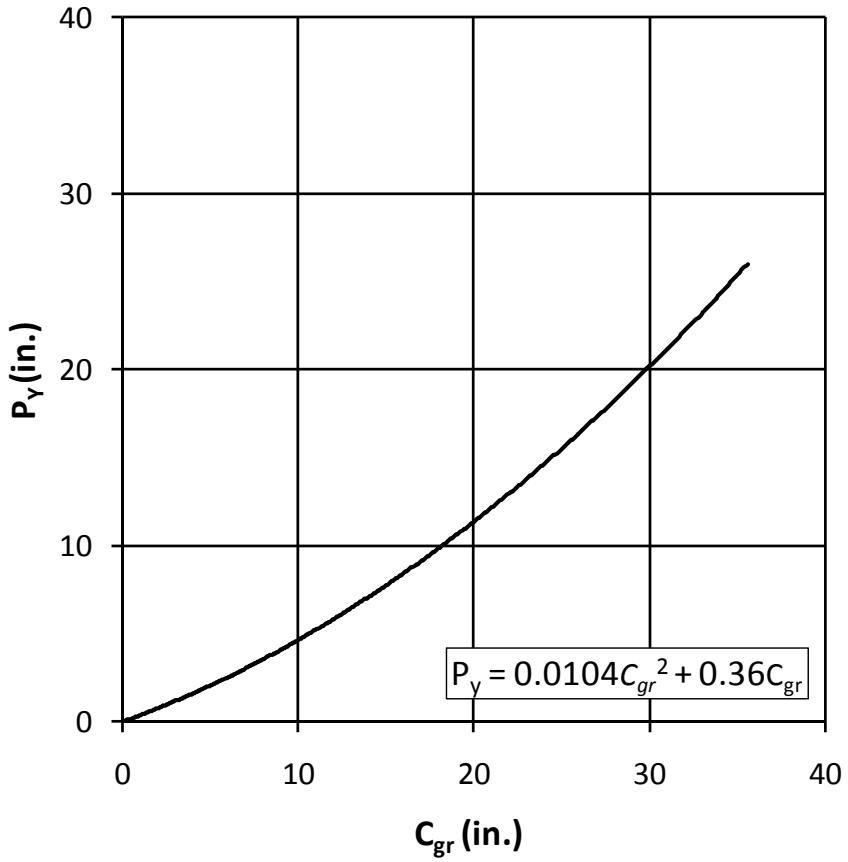

Figure 25: Vertical soil movement considered in LPILE analysis versus the greater calculated soil compression

3. For asymmetric embankment loading, determine the horizontal soil movement, P_x, to be considered in the LPILE analysis using the difference between C_{gr} and C_{ls} and Figure 26.

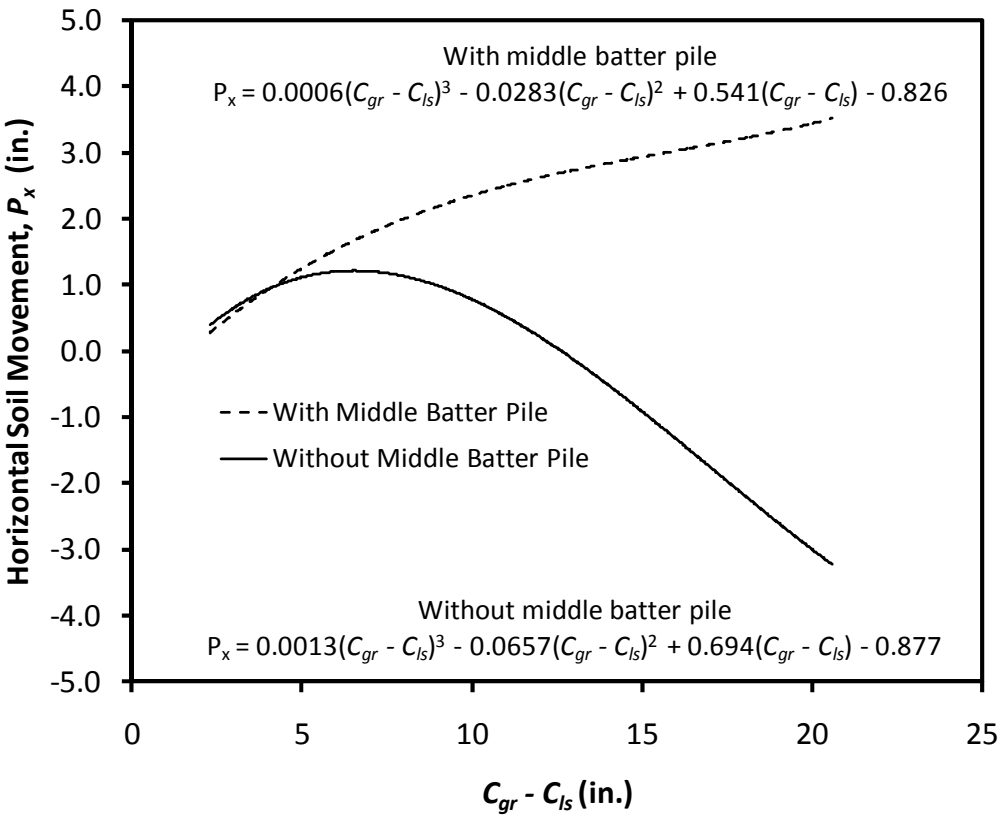

Figure 26: Horizontal soil movement considered in LPILE versus ($C_{gr} - C_{ls}$) for cases with and without a middle batter pile

4. Determine the soil movement to be used in LPILE as displacement of the spring supports at the top of the pile, Δ_o, by summing the components of P_y and P_x that act normal to the pile.

$$\Delta_o = P_y * \sin\beta + P_x * \cos\beta \quad (4)$$

5. Determine the distribution of the soil movements applied in LPILE. For a T-wall with its base below the embankment, as shown in Figure 22, let L_c = the length of the pile from the bottom of the T-wall to the top of the bearing layer and let L_e = 0. For a T-wall with its base in the embankment, as shown in Figure 23, let L_e = the length of pile within the embankment, and L_c = the length of the pile from the top of the clay layer to the top of the bearing layer. For both cases, let z = the distance along the pile starting from an origin at the bottom of the T-wall. The spring support displacements, Δ, in LPILE are applied according to

$$\Delta = \Delta_o \quad \text{for } z \le L_e \quad (5a)$$

$$\Delta = \Delta_o * [1 - (z - L_e)/L_c] \quad \text{for } z > L_e \quad (5b)$$

6. Determine the pile batter angle according to the convention shown in Figure 27 for soil moving against the pile, which is opposite of the convention given in the LPILE 5.0 Plus User's Manual for soils resisting lateral movement of the pile.

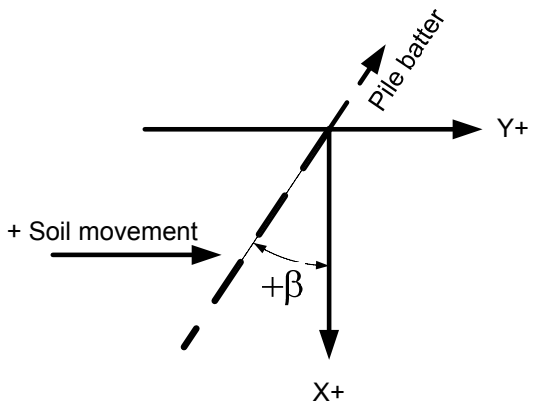

Figure 27: Sign convention in LPILE for soil movement and pile batter

7. Transform the soil profile according to Figure 28 to match the coordinate system used in LPILE, which is parallel to the pile axis.

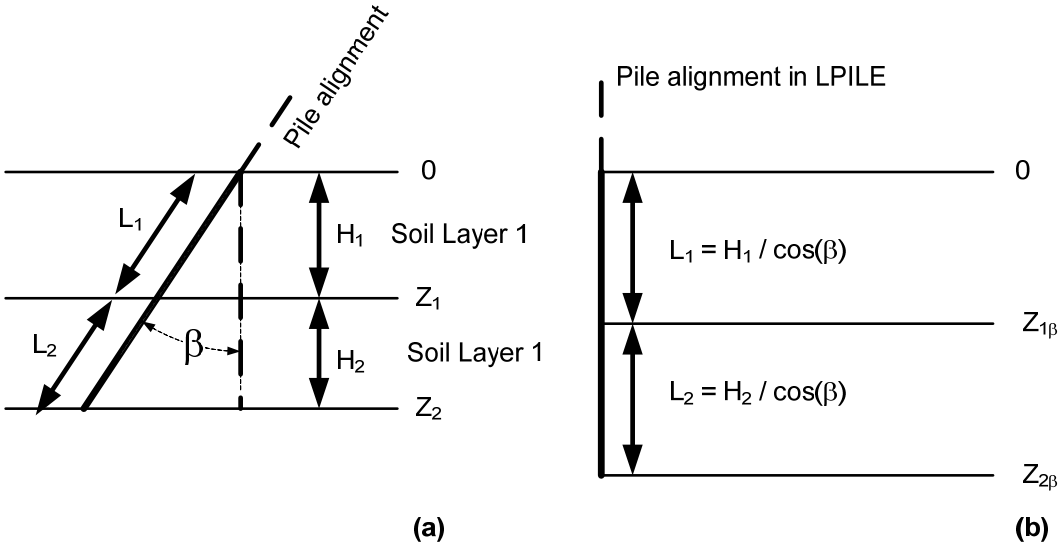

Figure 28: (a) Actual soil stratigraphy, (b) Soil stratigraphy modified for pile batter angle

8. Determine the factored unit weight, γ_β, for each soil layer considered in LPILE according to $\gamma_\beta = \gamma * \cos\beta$, where γ is the total unit weight of soils above the water table and γ is the buoyant unit weight of soils below the water table.

9. Determine the LPILE spring stiffness parameters using the guidance provided in the LPILE User's Manual.

10. Perform an LPILE analysis to determine the maximum moment, M_{max}, using a pinned restraint (zero moment and zero displacement) at the top of the pile, the spring support displacements from Steps 4 and 5, and the spring stiffness parameters from Step 9. The number of pile increments can be specified using the standard guidance in the LPILE User's Manual.

5.0 Example problem

5.1 Introduction to Example Problem

This example problem illustrates the LPILE Method for calculating downdrag-induced bending moments. The example problem is similar to the embankment and T-Wall geometry described in the report "Overview of FLAC Analysis for St. Bernard Parish" (Navin, 2009) and the foundation soil profile considered in the numerical model developed by Geomatrix Consultants, Inc. (2007) for T-Walls in the New Orleans area. Figure 29 shows the embankment, T-Wall, piling, and foundation soil profile for the example. The embankment includes a wave run-up berm on the flood side, which is not symmetric with the embankment fill of the protected side. Two batter piles are used on the protected-side and a sheet pile cut-off is also included. The tables included in Figure 29 provide the relevant information for the batter piles, as well as information about the soil properties. The goal of this analysis is to estimate the maximum bending moment in the critical flood-side batter pile due to downdrag. Other influences such as flood loading and axial load in the piles may also contribute to the total bending moment experienced by the pile.

5.2 Step-by-Step Procedure for Example Problem

1. Calculate the compression, *C*, of the soil from the bottom of the T-wall to the top of the bearing layer at the plan view locations where the outer flood-side and protected-side battered piles intersect the elevation corresponding to 25% of the depth from the bottom of the T-wall to the top of the bearing layer.

   Figure 30 shows subdivision of the embankment load into uniform area loads. Alternatively, solutions for linear varying surcharge pressure could be applied. The fill overlying the base of the T-Wall is not included in calculations of stress change in the clay. Two-dimensional conditions are assumed for calculating stress change, and this can be approximated by assuming that the loaded areas extend a great length in the direction of the T-Wall alignment.

   Based on the area loads shown in Figure 30, the change in vertical stress with depth is determined using Boussinesq elastic theory for the two locations where compression is to be determined. Using the results of the stress analysis, and the soil properties provided in Figure 29, the compressions on the flood side at the location of the left cross-hair, C_{FS}, and on the protected side at the location of the right cross-hair, C_{PS}, were calculated to be 10.66 and 8.34 inches, respectively. Accordingly, the greater compression, C_{gr}, is equal to 10.66 inches and the lesser compression, C_{ls}, is equal to 8.34 inches.

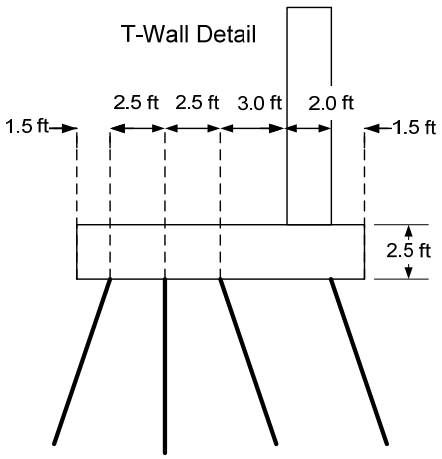

Relevant H-Pile (HP 14x73) Details for LPILE Analysis	
Moment of Inertia (in.^{4})	725.76
Depth and Width of Section (in.)	13.6 x 14.6
X-Sectional Area (in.^{2})	21.4
Young's Modulus (psi)	29 x 10^6

Soil Properties for Analysis	Soft Clay	Sand
Buoyant unit weight, γ (pci)	0.029	0.035
Compression ratio, $C_{\varepsilon c}$ Recompression ratio, $C_{\varepsilon r}$	0.2 0.02	
Preconsolidation pressure, P_p (psi)	$\text{Max}\begin{cases}6.25\\ \sigma_v'\end{cases}$	
Undrained strength, S_u (psi)	$\text{Max}\begin{cases}1.4\\ 0.25(\sigma_v')\end{cases}$	
Strain at 50% maximum stress, ε_{50}	0.01	
Effective friction angle, ϕ'		30
Soil modulus parameter, k (pci)		60

Unit weight of embankment fill (pcf)	110

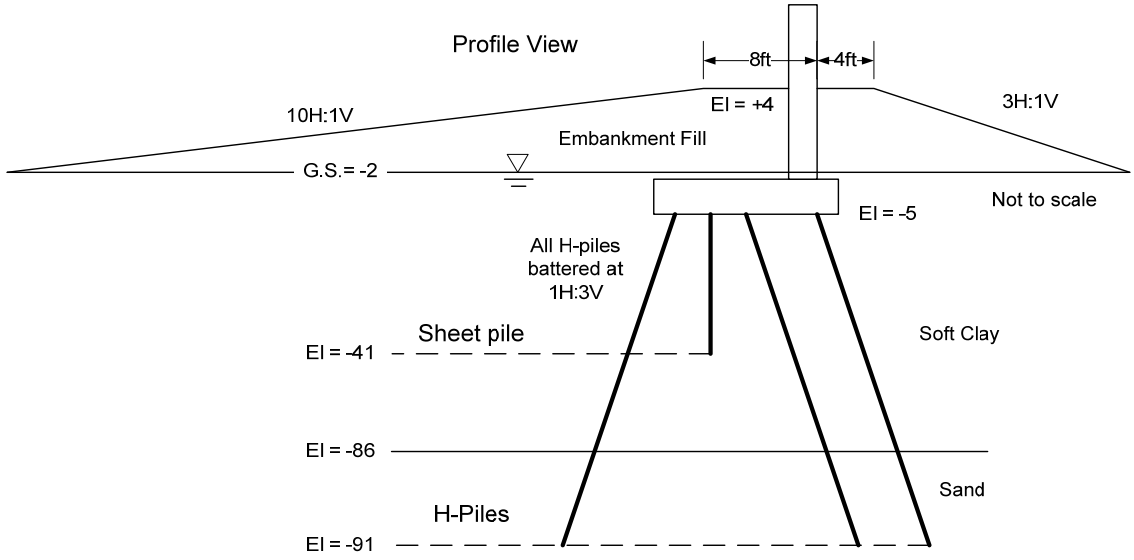

Figure 29: T-Wall, piling, embankment geometry, and relevant information for example problem

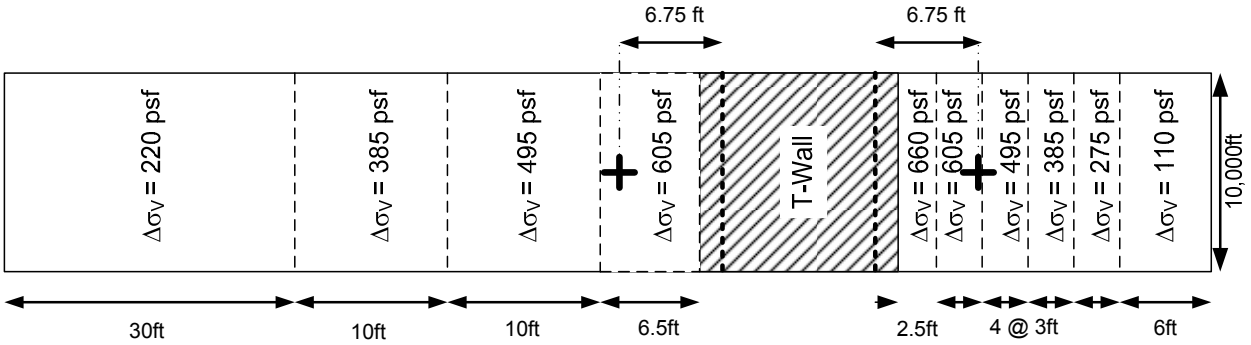

Figure 30: Plan view showing subdivision of fill into uniform area loads, excluding the fill overlying the T-Wall base. The locations where compression will be determined on the flood side and protected side are indicated with cross-hairs

2. Determine the vertical soil movement, P_y, to be applied in the LPILE Method using the value of C_{gr} determined in Step 1 and Figure 25 to account for the stiffening effect of the piles on soil compression. Using the equation for the best fit line, P_y can be determined as:

$$P_y = 0.0104(10.66)^2 + 0.36(10.66)$$
$$P_y = 5.02 \text{ inches}$$

3. Determine the horizontal soil movement, P_x, to be considered in the LPILE analysis using the difference between C_{gr} and C_{ls} and Figure 26. Since a middle batter pile is present in this problem, the upper curve should be used. Using the polynomial for the upper curve and the difference in the calculated compressions, which is equal to 2.32 inches, P_x can be determined as:

$$P_x = 0.0006(2.32)^3 - 0.0283(2.32)^2 + 0.541(2.32) - 0.826$$
$$P_x = 0.28 \text{ inches}$$

4. The soil movement used in LPILE as displacement of the spring supports at the top of the pile, Δ_o, is equal to the components of P_y and P_x that act normal to the pile. In this case, the batter angle, β, is equal 18.43 degrees, which is obtained from the arctan of the slope of the pile given as 1H:3V. The value of Δ_o is calculated using Equation (4), as follows:

$$\Delta_o = P_y * \sin\beta + P_x * \cos\beta$$
$$\Delta_o = (5.02)\sin 18.43 + (0.28)\cos 18.43$$
$$\Delta_o = 1.85 \text{ inches}$$

5. Determine the distribution of the soil movements applied in LPILE. In the current problem, the T-wall has its base below the embankment and therefore L_c = the length of the pile from the bottom of the T-wall to the top of the bearing layer and $L_e = 0$. Let z = the distance along the pile starting from an origin at the bottom of the T-wall. The spring support displacements, Δ, in LPILE are applied according to Equation (5b) with $L_e = 0$, as follows:

$$\Delta = \Delta_o * [1 - z/L_c]$$
$$= (1.85 \text{ inches})[1 - z/1024 \text{ inches}]$$

In this problem, L_c is the length of the pile from Elevation -5 to -86, which is a vertical distance of 81 ft. The length of the pile over this interval is 81 ft divided by the cosine of the batter angle, which is 85.4 ft or 1024 inches. If the magnitude of soil movement, Δ_o, is applied to the top of the pile in LPILE and a magnitude of zero is applied at L_c, LPILE automatically applies soil movements to the pile over the interval $0 \le z \le L_c$ according to

the linear variation in the expression above. A screen shot of the detail for this aspect of LPILE input for the example problem in shown in Figure 31.

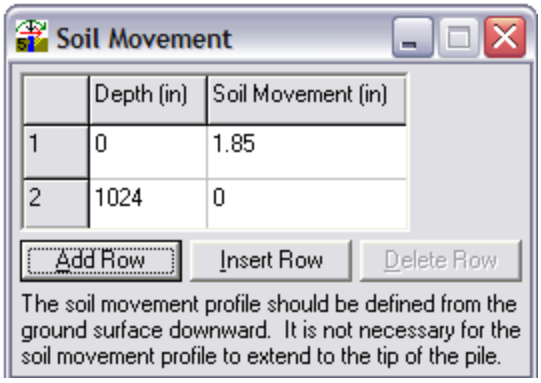

Figure 31: Input of soil movement in LPILE

6. Enter the pile properties into LPILE. The length of the pile is the total pile length from Elevation -5 to -91 and is therefore equal to 12[(91-5)/cos(18.43)] = 1088 inches. Using guidance given in the LPILE 5.0 Plus User's Manual, the pile was divided into 180 increments, and the pile was assigned a batter angle of 18.43 degrees based on the sign convention defined in this report. Next, the properties of the pile section are entered into LPILE. The cross sectional area, moment of inertia, and Young's modulus are provided in the problem statement. An equivalent pile diameter is input for the HP 14 x 73 piles using an equal area approach based on the section depth and width provided in the problem statement, such that the equivalent diameter equals the square root of $4*13.6*14.6/\pi$ = 15.9 inches. Screen shots of the LPILE input are provided in Figure 32.

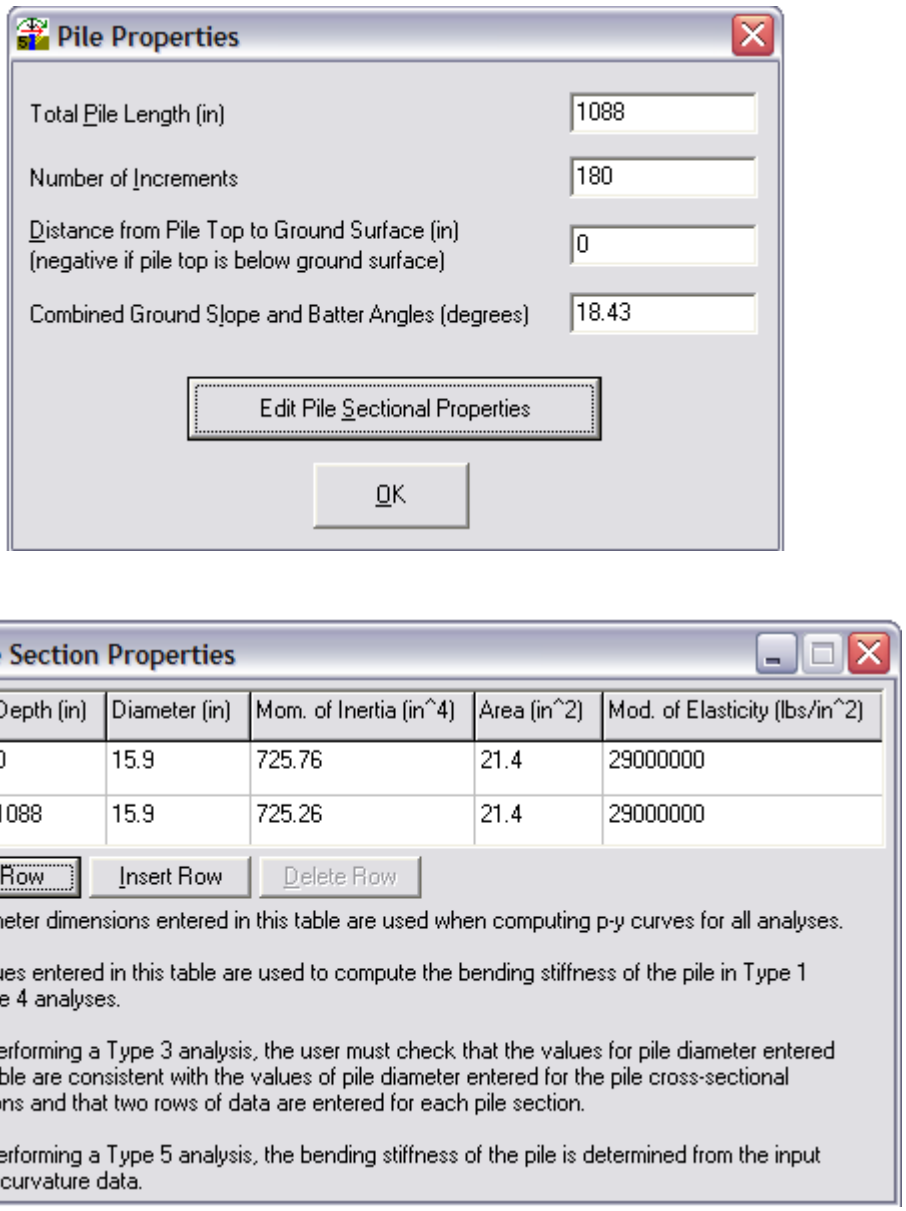

Figure 32: Pile properties used in LPILE

Use the static loading type under the “Loading Type” drop-down menu and a zero displacement, zero moment boundary condition at the top of the pile. No axial load should be specified since the LPILE Method does not include an axial-load contribution to downdrag induced bending moment. A screen shot of the boundary condition specified for this problem is shown in Figure 33.

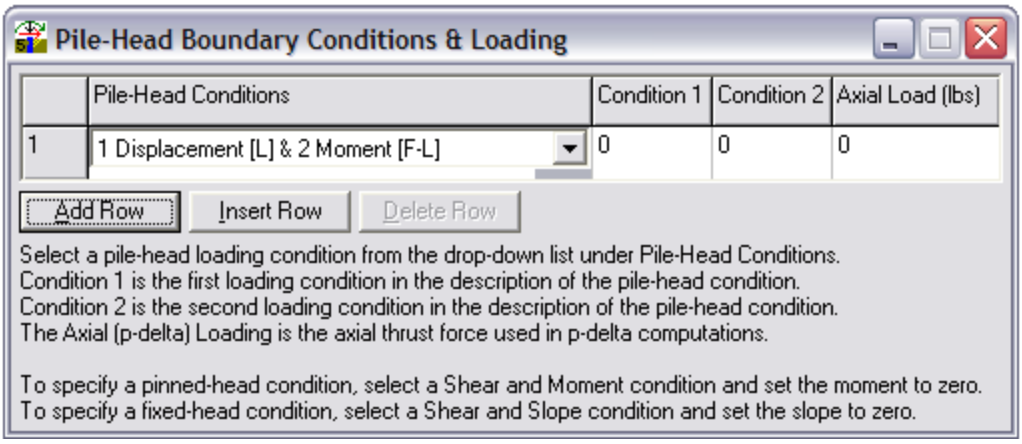

Figure 33: Boundary condition at the top of the pile used in LPILE

7. Since the coordinate axes in LPILE are axial to the pile, a transformed soil profile needs to be developed from the information given in the example problem statement. The first step is to determine the transformed soil layer thicknesses according to Figure 28.

   For the example problem, the transformed thickness of the clay from Elevation -5 to -86 is 12[(86-5)/cos(18.43)] = 1024 inches, while the sand from Elevation -86 to the bottom of the pile has a thickness of 12[(91-86)/cos(18.43)] = 64 inches.

8. The transformed unit weight, γ_β, needs to be determined for each soil according to $\gamma_\beta = \gamma * \cos\beta$, where γ is the total unit weight of soils above the water table and γ is the buoyant unit weight of soils below the water table. This step is needed for LPILE to determine the correct overburden pressure for the transformed soil stratigraphy. For this problem, the transformed buoyant unit weight for the soft clay is equal to (0.029 pci)cos(18.43) = 0.028 pci. For the sand, the transformed buoyant unit weight is equal to (0.035 pci)cos(18.43) = 0.033 pci.

9. Enter the remaining soil properties, including the spring stiffness parameters, into LPILE. Due to overconolidation of the upper soft clay, a minimum undrained shear strength of 1.4 psi was given in the problem statement. For LPILE to properly assign undrained strengths to each pile-soil increment, the clay layer will be divided into two sublayers. The upper layer will be assigned an undrained strength of 1.4 psi, while the lower layer will increase linearly with effective overburden pressure. The boundary between these two layers in the transformed profile can be determined according to

$$z = 1.4/(0.25*0.028) \quad (7a)$$

$$z = 200 \text{ inches} \quad (7b)$$

   The undrained strength of the clay at the top of the sand bearing layer is equal to

$$S_u = 0.25(0.028 * 1024) \quad (8a)$$

$$S_u = 7.2 \text{ psi} \quad (8b)$$

The last steps in defining the soil profile in LPILE are to determine the LPILE spring stiffness parameters ε_{50} for the clay as well as ϕ and k for the sand using the guidance provided in the LPILE User's Manual. For the example problem, values for these parameters are given in Figure 29.

Screen shots of the soil profile used in LPILE for the example problem are shown below in Figures 34 and 35.

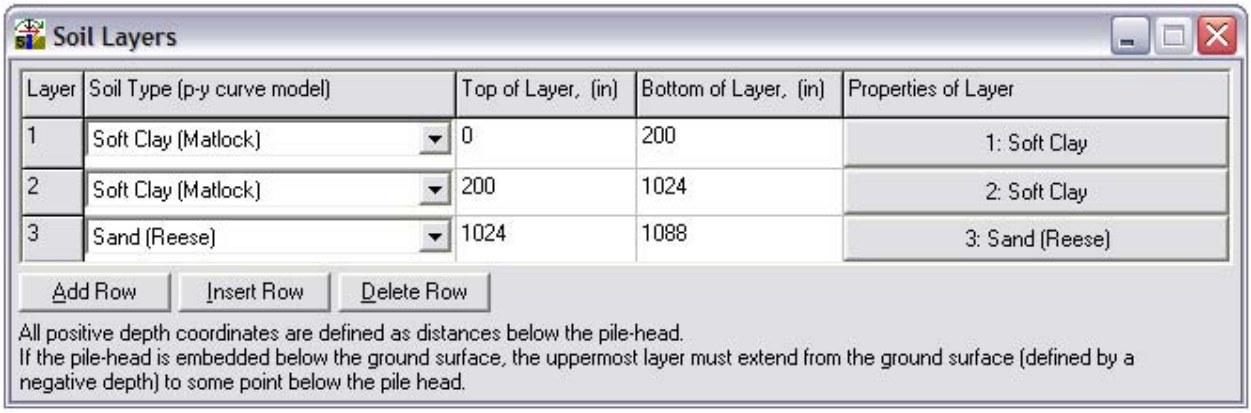

Figure 34: Soil profile used in LPILE for example problem

Soft Clay 1

1=Top, 2=Bottom	Eff. Unit Weight, (lbs/in^3)	Undrained Cohesion, c, (lbs/in^2)	Strain Factor, E50
1	0.028	1.4	0.01
2	0.028	1.4	0.01

LPile linearly interpolates with depth to compute values between the top and bottom of the layer.
LPile will use a default value for E50 if the input value equals zero.

Soft Clay 2

1=Top, 2=Bottom	Eff. Unit Weight, (lbs/in^3)	Undrained Cohesion, c, (lbs/in^2)	Strain Factor, E50
1	0.028	1.4	0.01
2	0.028	7.2	0.01

LPile linearly interpolates with depth to compute values between the top and bottom of the layer.
LPile will use a default value for E50 if the input value equals zero.

Sand (Reese) 3

1=Top, 2=Bottom	Eff. Unit Weight, (lbs/in^3)	Friction Angle, deg.	p-y Modulus, k, (lbs/in^3)
1	0.033	30	60
2	0.033	30	60

LPile linearly interpolates with depth to compute values between the top and bottom of the layer.
LPile will use a default value for k if the input value equals zero.

Figure 35: Soil properties assigned in LPILE

10. Perform an LPILE analysis to determine the maximum moment, M_{max}, due to downdrag. For the example problem, the maximum moment was determined to be 90 k-ft. Figure 36 shows the bending moment distribution predicted by the LPILE analysis.

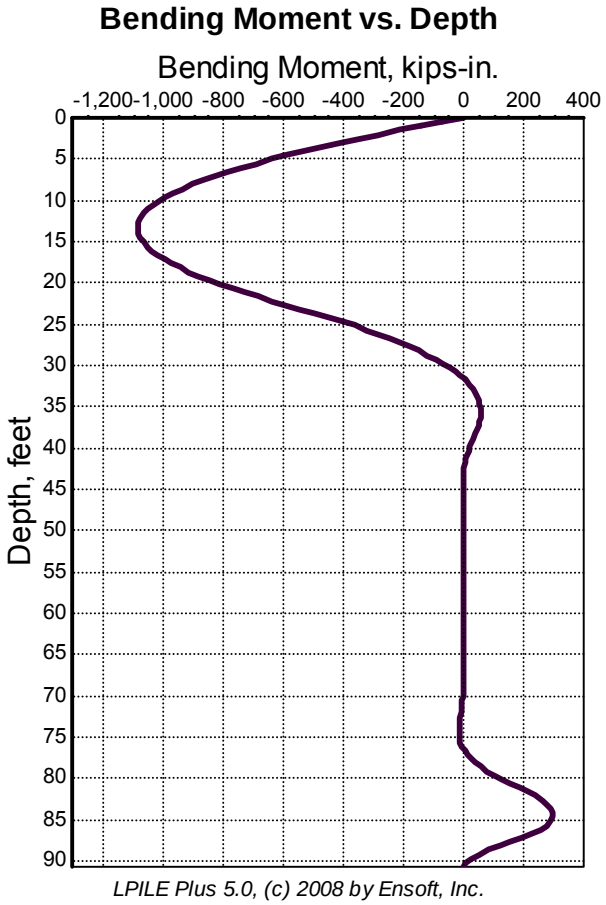

Figure 36: Moment distribution estimated by LPILE analysis

6.0 Limitations

The LPILE Method presented in this report was developed using the specific T-Wall geometry, pile properties, and soil conditions shown in Figures 9 and 10 and Table 12. The assumptions listed in Table 15 were also made. The LPILE Method may not be accurate for conditions that are substantially different from those used to develop the method.

The bending moment estimated using the LPILE Method is the component of the total bending moment in the batter pile due to downdrag. Other sources of bending moment, such as flood loading, can contribute to the total bending moment in the pile.

7.0 Cited References

Broms, B., and Fredericksson, A. (1976). "Failure of pile-supported structures caused by settlements." Proceedings of the 6th European Conference on Soil Mechanics and Foundation Engineering, 383-386.

Ensoft. (2008). *LPILE 5.0 Plus User's Manual*, Ensoft, Inc., Austin, TX.

Geomatrix Consultants, I. (2007). "Soil-structure interaction and load transfer mechanism of pile-supported T-Wall for New Orleans levees, Project 12048.001." Prepared for U.S. Army Engineer Research & Development Center, Waterways Experiment Station, Vicksburg, Mississippi, Okland, California.

ITASCA. (2002). "FLAC Fast Lagrangian Analysis of Continua." ITASCA Consulting Group, Minneapolis, Minnesota.

Matlock, H. (1970). "Correlations for design of laterally loaded piles in sift clay." 2nd Annual Offshore Technology Conference, OTC1204 Vol 1, Houston, Texas, pp. 577-594.

Rao, S. N., Murthy, T. V. B. S. S., and Veeresh, C. (1994). "Induced bending moments in batter piles in settling soils." *Soils and Foundations*, 34(1), 127-133.

Reese, L. C., Cox, W. R., and Koop, F. D. (1974). "Analysis of laterally loaded piles in sand." 5th Annual Offshore Technology Conference, OTC 2080, Houston, Texas.

Sato, S., Akai, K., Funahashi, T. (1970). "Study on methods to calculate negative skin friction and bending in a batter pile." Laboratory Report of Japan Road Corporation, pp. 31-49 (*in Japanese*).

Sato, S., Iwashita, F., and Ohmori, H. (1987). "The calculation method on the bending moment of a batter pile induced by ground settlement." *Soils and Foundations*, 27(2), 75-84 *(in Japanese)*.

Sawaguchi, M. (1989). "Prediction of bending moment of a batter pile in subsiding ground." *Soils and Foundations*, 29(4), 120-126.

Shibata, T., Sekiguchi, H., and Yukitomo, H. (1982). "Model test and analysis of negative friction acting on piles." *Soils and Foundations*, 22(2), 29-39.

Takahashi, K. (1985). "Bending of a batter pile due to ground settlement." *Soils and Foundations*, 25(4), 75-91.

List of Appendices

A. Compiled References identified during the literature review
B. Overview and impressions of existing methods to estimate downdrag-induced bending moments
C. Summaries of selected sources evaluated during the literature review
    i. Broms and Fredericksson (1976)
    ii. Shibata et al. (1982)
    iii. Takahashi (1985)
    iv. Sawaguchi (1989)
    v. Rao et al. (1994)
    vi. Hance and Stremlau (2009)
    vii. Stremlau and Hance (2009)

D. Summary of experimental studies and available data on downdrag-induced bending moments
E. Comparison of the method by Shibata et al. (1982) to the experimental studies.

Appendix A

Compiled references identified during the literature review

Broms, B., and Fredericksson, A. (1976). "Failure of pile-supported structures caused by settlements." Proceedings of the 6th European Conference on Soil Mechanics and Foundation Engineering, 383-386.
Ensoft. (2008). *LPILE 5.0 Plus User's Manual*, Ensoft, Inc., Austin, TX.
Geomatrix Consultants, I. (2007). "Soil-structure interaction and load transfer mechanism of pile-supported T-Wall for New Orleans levees, Project 12048.001." Prepared for U.S. Army Engineer Research & Development Center, Waterways Experiment Station, Vicksburg, Mississippi, Okland, California.
Ghaly, A. M. (1995). "Discussion of "Induced bending moments in batter piles in settling soils" by S. Narasimha Rao et al." *Soils and Foundations*, 35(1), 174-175.
Hance, J., and Stremlau, T. (2009). "Lateral load on piles subjected to downdrag." Internal document, Eustis Engineering, Metairie, Louisiana.
ITASCA. (2002). "FLAC Fast Lagrangian Analysis of Continua." ITASCA Consulting Group, Minneapolis, Minnesota.
Kelesoglu, M. K., and Cinicioglu, S. F. (2010). "Free-field measurements to disclose lateral reaction mechanism of piles subjected to soil movements." *Journal of Geotechnical and Geoenvironmental Engineering*, 136(2), 331-343.
Matlock, H. (1970). "Correlations for design of laterally loaded piles in sift clay." 2nd Annual Offshore Technology Conference, OTC1204 Vol 1, Houston, Texas, pp. 577-594.
Navin, M. (2009). "FLAC analyses for T-Wall downdrag investigation." Internal document, USACE, St. Louis, Missouri, pp.24.
Navin, M. (2009). "Overview of FLAC analysis for St. bernard Parish." Internal document, USACE, St. Louis, Missouri, pp17.
Rajashree, S. S., and Sitharam, T. G. (2001). "Nonlinear finite-element modeling of bater piles under lateral load." *Journal of Geotechnical and Geoenvironmental Engineering*, 127(7), 604-612.
Rao, S. N., Murthy, T. V. B. S. S., and Veeresh, C. (1994). "Induced bending moments in batter piles in settling soils." *Soils and Foundations*, 34(1), 127-133.
Rao, S. N., Murthy, T. V. B. S. S., and Veeresh, C. (1995). "Closure to "Induced bending moments in batter piles in settling soils" " *Soils and Foundations*, 35(1), 175.
Reese, L. C., Cox, W. R., and Koop, F. D. (1974). "Analysis of laterally loaded piles in sand." 5th Annual Offshore Technology Conference, OTC 2080, Houston, Texas.
Reese, L. C., and Van Impe, W. F. (2001). *Single piles and pile groups under lateral loading*, Taylor and Francis, London, U.K.
Sato, S., Akai, K., Funahashi, T. (1970). "Study on methods to calculate negative skin friction and bending in a batter pile." Laboratory Report of Japan Road Corporation, pp. 31-49 (*in Japanese*).
Sato, S., Iwashita, F., and Ohmori, H. (1987). "The calculation method on the bending moment of a batter pile
induced by ground settlement." *Soils and Foundations*, 27(2), 75-84 *(in Japanese)*.
Sawaguchi, M. (1989). "Prediction of bending moment of a batter pile in subsiding ground." *Soils and Foundations*, 29(4), 120-126.
Shibata, T., Sekiguchi, H., and Yukitomo, H. (1982). "Model test and analysis of negative friction acting on piles." *Soils and Foundations*, 22(2), 29-39.
Stremlau, T., and Hance, J. (2009). "Lateral loads on piles." Internal document, Eustis

Engineering, Metairie, Louisiana.
Takahashi, K. (1985). "Bending of a batter pile due to ground settlement." *Soils and Foundations*, 25(4), 75-91.
Templeton, A. E. (2009). "Settlement and settlement induced stress." Burns Cooley Dennis, Inc., Ridgeland, Mississippi, pp. 49.
Tominaga, M., and Hashiimoto, M. (1987). "Discussion of "Bending of a batter pile due to ground settlement" by Kunio Takahashi." *Soils and Foundations*, 27(1), 102-104.
Wang, S. T., and Reese, L. C. (1993). "COM624P-Laterally loaded pile analysis program for the microcomputer, Version 2.0." FHWA-SA-91-048, Federal Highway Administration, Washington, D.C., pp.504.
Wenz, K. P. "Large scale tests for determination of lateral loads on piles in soft cohesive soils." *Proceedings of the 8th International Conference of Soil Mechanics and Foundation Engineering*, 247-255.

Appendix B

Overview and impressions of existing methods to estimate downdrag-induced bending moments

Method	Pros/Cons	Assumptions	Remarks/ Other findings of study
Sato et al. (1970) (*in Japanese*)	• Simple closed-form solution • Selection of loading zone dimensions is subjective and has significant impact on results	• Pile considered to be elastic beam • Clay divided into loading zone and supporting zone. • Loading zone carries weight of clay over "effective length" and "effective width" • Supporting zone treats clay as Winkler soil, therefore ground reaction is linear. • Pile considered to be pinned at base of clay layer, no tip settlement • Moments and deflections are zero at either end of pile	• Sato's method is very sensitive to the choice of 'effective width' and 'effective length' for defining the loading zone. The recommendation is to use an effective width of three times the pile diameter, but there is no guidance on selecting an effective length. • When calibrated, Takahashi (1985) showed that this model has good ability to predict bending moments.
	Assessment • Since there is no English version of this paper, pursuing this method further would be difficult. • This method appears to have no advantages to the method by Sawaguchi (1989). • Usage of this method requires defining the dimensions of an upper loading zone. Although some guidance is provided in the paper regarding the selection of the width of the loading zone, the choice of the length of the zone is rather arbitrary and has significant effect of the predicted maximum bending moment. Therefore, it would be difficult to assess the reliability of the bending moments predicted using this method.		
Broms and Fredriksson (1976)	• Use of trigonometric series for solution of the analytical model makes this method impractical for general use	• Bending moments in piles are due to downdrag forces • Axial loads in pile have insignificant impact on predicted bending moment • Clay is considered as Winkler soil, therefore ground reaction is linear • Settlement assumed to be uniform over the length of the pile	• Broms and Fredriksson use the concept of virtual work to equate the internal work in the pile due to the induced moment and the external work due to displacement of the soil • They use an empirical relationship between the coefficient of subgrade reaction, the undrained strength of the clay, and the pile diameter. This relationship is also used by Shibata et al. (1982) • Broms and Fredriksson perform a parametric study using their analytical model to investigate the influences of the following on pile bending moments: Pile modulus, pile length, settlement magnitude, undrained shear strength of clay, restraint conditions of the pile, variation of shear strength with depth, and the presence of a desiccated crust.

Method	Pros/Cons	Assumptions	Remarks/ Other findings of study
	Assessment • There is not a usable form of the expression for bending moment readily available. • Insufficient guidance is provided in the paper to reproduce the trigonometric series used by Broms and Fredriksson to solve the differential expression for bending. • This approach appears to have no advantages over the method by Shibata et al. (1982), except that Broms and Fredriksson show their approach applied to both hinged and fixed conditions at the head of the pile.		
Shibata et al. (1982)	• Simple closed-form solution • Limited applicability to realistic field conditions	• Pile considered to be an elastic beam • Clay is considered as Winkler soil, therefore ground reaction is linear • Pile considered to be pinned at base of clay layer, therefore there is no settlement or moment at the pile tip • Linear variation of settlement through clay layer • Moments and deflections are zero at either end of pile • Contribution of axial pile loads to deflections and moments are insignificant.	*Experimental model findings* • A linear relationship exists between bending moment and applied consolidation pressure • A linear relationship exists between downdrag load and consolidation pressure • A 20% reduction in max. bending moment was observed when bitumen was used for batter piles. • For small batter angle, the bending moment at a particular location along the axis of the pile is proportional to batter angle
(continued) Shibata et al. (1982)	**Assessment** • The simple closed-form solution proposed by Shibata et al. can be used to predict the maximum bending moment measured in laboratory and field-scale studies with good accuracy, provided that the right value is used for the horizontal subgrade reaction coefficient assumed over the pile length. • The method is suited for batter piles with a pinned top connection which are embedded in uniform clay and bear on a stiff underlying stratum. The method loses accuracy for bending moment distribution of piles that pass through an embankment layer or extend above the ground surface. • Reliable use of this method would require a way to confidently estimate the coefficient of horizontal subgrade reaction for local soils. • It does not appear that the model by Shibata et al. can be extended to include other boundary conditions, variable ground conditions, or nonlinearity within the scope of this project. However, such extensions may be possible in the future by developing adjustment factors or adding an extra calculation step.		

Method	Pros/Cons	Assumptions	Remarks/ Other findings of study
Takahashi (1985)	• No closed form solution • Insufficient details are provided to implement this approach • More realistic treatment of settling clay • Considers case where pile penetrates the embankment • Boundary condition are not explicitly given	• Pile considered to be an elastic beam • Clay is considered as Winkler soil, therefore ground reaction is linear • Non-linear distribution of clay settlement according to double-drained assumed strain profile • Bending moment induced by embankment through component of overburden pressure normal to the pile axis • Pile considered to be pinned at base of clay layer, therefore there is no settlement or moment at the pile tip	• Takahashi's model incorporates four conditions: 1) bearing stratum, 2) consolidating clay, 3) embankment layer, 3) free portion • The pile is loaded normal to the pile axis both through the embankment and the consolidating clay. • Takahashi does not provide details on how to solve for unknown constants and implement his approach. • Possible typo in Equation 6 of the paper. • Takahashi compared the deflections and moments measured in experimental and field-scale studies and found that his method, along with Sato's method (1970) outperformed the predictive ability of his 3D finite element model. *Experimental model findings* • A proportional relationship exists between maximum bending moment and pile inclination angle • A linear relationship exists between ground settlement magnitude and maximum bending moment. • Takahashi observed a linear relationship between settlement of the pile top and the pile inclination angle *Numerical study findings* • Takahashi found that a 3D FEM was necessary since his 2D model was unable to capture the pile behavior observed in the experimental model.

Method	Pros/Cons	Assumptions	Remarks/ Other findings of study
(continued) Takahashi (1985)			*Field study findings* • The use of bitumen coating can significantly reduce downdrag loads on a batter pile, but can actually result in a slight increase in the measured maximum bending moment
	Assessment • There is not a usable form of the expression for calculating bending moment readily available. • The additional features incorporated into Takahashi's Method over the Shibata Method appear to provide little added benefit to addressing the evaluation of bending moments in batter piles supporting T-Walls. • It does not appear that Takahashi's Method can be extended to include other boundary conditions or nonlinearity within the scope of this project.		
Sato et al. (1987) (*Japanese*)	• A description of the method in English is not available	• Assumes linear subgrade reaction up to an ultimate capacity and perfectly plastic response thereafter	• It appears that this method is very similar to the method by Sato et al. (1970) with the addition of the consideration of the plastic yield of the soil. • Based on his experimental study, Sawaguchi (1989) showed that this model does reasonably well at predicting maximum bending moment
	Assessment • Since there is no English version of this paper, pursuing this method further would be difficult. • From the figures in the reference paper, it appears that this method is similar to the method by Sato et al. 1970 with the inclusion of a yield stress to the linear soil response. • It is unclear whether sufficient details are provided in the paper to implement the approach.		

Method	Pros/Cons	Assumptions	Remarks/ Other findings of study
Sawaguchi (1989)	• Sawaguchi provides non-dimensional design charts to calculate the maximum bending moment. • The charts provided in the paper cannot be used to determine the distribution of bending moment. • No closed-form solution exists. • Sawaguchi does not provide details for implementation of his method beyond the use of the design charts.	• Pile considered to be an elastic beam • Pile is considered to be loaded as a positive projecting conduit according to Spangler's formula in upper "Loading zone" • Below loading zone, clay is considered as Winkler soil, therefore ground reaction is linear. • Linear variation of settlement through clay layer • Moments and deflections are zero at either end of pile	• The portion of the pile that is considered within the "Loading zone" is determined in the solution using the boundary conditions of the problem. • To estimate the coefficient of subgrade reaction, Sawaguchi used an empirical relationship with unconfined compressive strength proposed by Sawaguchi (1986). • Using the field study data also reported by Sato et al. (1987) and Takahashi (1985), Sawaguchi compared the measured maximum bending moments to the values predicted using his method and the methods by Takahashi (1985), Sato et al. (1987) and found that all had good predictive ability.
	Assessment • The method does not offer significant advancements over the Shibata Method except for the inclusion of a "loading zone" near the pile top. • It does not appear that Sawaguchi's method can be extended to include other boundary conditions, variable ground conditions, or nonlinearity within the scope of this project. • Evaluating the Sawaguchi Method would require digitizing the chart solutions provided in the paper to predict the maximum bending moment.		

Method	Pros/Cons	Assumptions	Remarks/ Other findings of study
Rao et al. (1994)	• Simple model, easy to implement • Some assumptions are questionable • Development includes incorrect consideration of pore pressures. • Poor predictive quality relative to other methods	• The pile is treated as a free spanning beam with either pinned-pinned or fixed-fixed connections • The pile is assumed to carry the foundation soil within a wedge-shaped volume defined based on the pile length, width, and inclination. The load imposed on the pile due to the foundation soil is equal to the weight of the wedge of soil minus the shear resistance acting between the sides of the wedge and the surrounding soil. • Fully-mobilized shear forces act on the sides of the wedge of soil supported by the pile but not on the face of the wedge. • The component of the supported weight of soil which acts normal to the pile axis is treated as a uniformly distributed load over the length of the pile.	*Experimental study findings* • Rao et al. compared their analytical model assuming pinned and fixed end supports to the experimental results for bending moment and found that the fixed support condition yielded better agreement.
	Assessment • This does not appear to be a suitable method due to the errors and unreasonable assumptions made during the development of the model.		

Method	Pros/Cons	Assumptions	Remarks/ Other findings of study
Hance and Stemlau (2009)	• Procedure to determine the position of the neutral plane is incorrect. • Some assumptions used in the method are questionable	• The pile length below the neutral plane is considered to have an insignificant impact on the predicted values of maximum bending moment and is disregarded. • The pile length above the neutral plane considered to be a free-spanning beam with pinned end supports, therefore no displacement or moment is allowed at the neutral plane. • Pile tip resistance is incorrectly assumed to increases in linear proportion to shaft resistance. • Above the neutral plane, the pile is assumed to not make contact with the underlying soil. • The downdrag load on the pile is assumed to be equal to the integrated shaft resistance above the neutral plane. • The downdrag load is assumed to have a triangular distribution over the pile length above the neutral plane.	• This procedure predicts the maximum bending moment by 1) estimating the position of the neutral plane for a particular set of ground conditions and axial service load, 2) determining the downdrag force as the maximum shaft resistance above the neutral plane, 3) treating the pile above the neutral plane as a free-spanning beam with pinned end supports, 4)applying the component of the downdrag load which is perpendicular to the axis of the pile to the beam as a load with a triangular distribution.
	Assessment • This approach has flaws in the way the position of the neutral plane is estimated, which is required for estimation of bending moment. • This approach also makes some unreasonable assumptions in its development.		

Method	Pros/Cons	Assumptions	Remarks/ Other findings of study
Stremlau and Hance (2009)	• Procedure to determine the position of the neutral plane is incorrect. • Some assumptions used in the method are questionable	• The pile length below the neutral plane is considered to have an insignificant impact on the predicted values of maximum bending moment and is disregarded. • The pile length above the neutral plane considered to be a free-spanning beam with pinned end supports, therefore no displacement or moment is allowed at the neutral plane. • The pile length above the neutral plane considered to be a free-spanning beam with pinned end supports, therefore no displacement or moment is allowed at the neutral plane. • When determining the soil pressure acting on the piles using the p-y curves from LPILE, the pile is assumed to be rigid.	• We have not been provided a complete example of the procedure for this method. • The position of the neutral plane is required for use of this procedure. The information provided on this method does not show how the neutral plane was determined, however it appears that it was estimated using the same approach that was used for the method by Hance and Stremlau (2009). • In this approach the maximum bending moment is predicted by 1) estimating vertical settlement through the clay profile, 2) obtaining p-y curves for a vertical pile embedded in the clay, 3) treating the pile above the neutral plane as a free-spanning beam with pinned supports, 4) determining the soil pressure distribution acting on the pile using the p-y curves and the component of settlement which acts perpendicular to the pile axis as the deflection for various points along the pile, 5) determine to maximum bending moment due to the non-uniform pressure acting on the beam.
	Assessment • Like Hance and Stremlau (2009), this approach makes some unreasonable assumptions in its development.		
Templeton (2009)	• This method or a derivative appears to be promising	• This approach uses the component of the soil displacement due to consolidation which acts normal to the batter pile axis as the magnitude of free-field soil displacement in LPILE.	• Usage of this approach will require reviewing the usage of p-y curves developed for vertical piles on battered piles.
	Assessment • A derivative of this approach appears to be promising.		

Appendix /

Summaries of selected sources evaluated during the literature review

i. Broms and Fredericksson (1976)
ii. Shibata et al. (1982)
iii. Takahashi (1985)
iv. Sawaguchi (1989)
v. Rao et al. (1994)
vi. Hance and Stremlau (2009)
vii. Stremlau and Hance (2009)

Reference:

Broms, B., and Fredericksson, A. (1976). "Failure of pile-supported structures caused by settlements." Proceedings of the 6th European Conference on Soil Mechanics and Foundation Engineering, 383-386.

Overview:

This study presents the development of an analytical model to estimate the deflection and bending moment induced in a batter pile due to downdrag. The model is then used to theoretically explore the influences of the following factors on bending moment and deflection: the modulus of the pile material, pile length, settlement magnitude, shear strength of the foundation soil, restraint conditions at the ends of the pile, the variation of shear strength with depth, and the presence of a dessicated upper crust. Also investigated was the magnitude of ground settlement that could be tolerated by a pile with a moment capacity of 41kNm installed at a certain inclination angle through a clay layer with a constant undrained strength.

Development of analytical model:

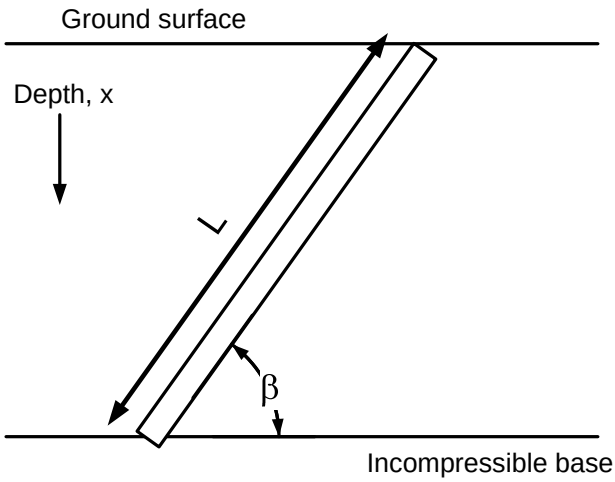

Figure 1: Analytical model proposed by Broms and Fredriksson

Broms and Fredriksson assume that bending moments are induced in batter piles due to the component of settlement of the surrounding soil that is perpendicular to the pile axis. They acknowledge that the component of downdrag force that acts axial to the pile, in addition to the imposed load at the pile head, has the effect of increasing the moment capacity of the pile, but this influence has been neglected in the model. Their model assumes a linear soil response to pile deflection by the use of a coefficient of

subgrade reaction, k_h, which they assumed can be approximated from the undrained shear strength, S_u, of the clay, and the pile diameter, D, according to Equation 1.

$$k_h = 10\frac{S_u}{D} \quad 1$$

Similar to the methods by Shibata (1982) and Takahashi (1985), the reaction of the soil is proportional to the relative displacement of the pile and the soil by Equation 2, which is equal to the difference between the component of settlement normal to the pile axis, $\delta_x \cos\beta$ and the lateral deflection of the pile, y_x. As indicated in Figure 1, β is the inclination of the pile from horizontal and δ_x is the vertical ground settlement.

$$q_x = k_h\left(\delta_x \cos\beta - y_x\right) \quad 2$$

To relate the load-displacement relationship of the soil the to the lateral load-displacement relationship of the pile, Broms and Fredriksson use the principal of virtual work. They use trigonometric series out to eighty terms to apply the virtual work concept based on solutions by Hetenyl (1946) where the coefficient of subgrade reaction varies along the length of the pile. The internal work, V_1, from the moment of the pile is given by Equation 3 in the paper. The work by the surrounding soil, V_2, is given by Equation 4 and the work imposed by the soil on the pile, V_3, is given by Equation 5. Using the principal of virtual work, the work done by the soil on the pile, V_3, must equal the change in internal work, V_1. This equality is given in Equation 6 in the paper. Since the work by the external soil load depends on the magnitude of settlement acting normal to the pile axis, the distribution of the settlement with depth has important impacts on the model response. Broms and Fredriksson are not clear as to how they assume settlement varies along the length of the pile. The impression from the text and from Figure 3 in the paper is that the settlement is assumed to be uniform over the pile length. This means that the soil displacement normal to the pile is equal to the component of settlement at the ground surface which acts normal to the pile.

Results of parametric study using the analytical model:

Below are the results of the investigation for each of the parameters evaluated.

Modulus of elasticity of the pile

Broms and Fredriksson observed that the bending moment increases in the pile with an increase in modulus. They also observed that the location of the maximum bending moment moves away from the pile head as the pile becomes stiffer.

Pile length

The results of the theoretical investigation indicate that the maximum bending moment predicted in the pile is independent of pile length for lengths greater than 10m.

Settlement magnitude and shear strength of clay foundation soil

Broms and Fredriksson found that the predicted maximum bending moment increased linearly with the magnitude of surface settlement acting normal to the pile axis. Figure 3 in the paper shows that increasing the shear strength of the foundation soil increases the predicted maximum bending moment for a given magnitude of settlement. This conclusion is due to the increase in virtual work by the soil pressure acting on the pile since more work is required to displace the soil a given magnitude when the coefficient of subgrade reaction is higher.

End restraint

The model developed by Broms and Fredriksson predicts that the maximum bending moment is nearly three times higher when the pile head is fixed rather than pinned.

Variation of shear strength with depth

Broms and Fredriksson investigated the response of their model to an undrained shear strength profile that increases linearly with depth. Since the value of shear strength is used to estimate the coefficient of subgrade reaction, the variation affects the virtual work done by the soil on the pile. Based on Figures 4 and 5 in the paper, they concluded that there was not a significant difference in the magnitude or distribution of bending moments between the case where shear strength is constant and the case where shear strength increases with depth.

Presence of dessicated crust

Broms and Fredriksson studies the case where the upper 2 meters of foundation soil was assigned a shear strength that was 10 times higher than the underlying soil. This scenario was used to investigate the influence of a stronger, dessicated, layer of soil at the ground surface. Their model predicts that the maximum bending moment for a pile will be 4 times higher when a desiccated crust is present compared to a profile without such a crust.

Settlement at pile failure

Assuming a pile with a moment capacity of 41kN, Broms and Fredriksson varied the pile inclination angle from horizontal and determined the magnitude of settlement needed to produce failure. They found that piles with increasing batter failed at lower magnitudes of settlement. They also observed that piles become less tolerant of settlement (more prone to failure) when the undrained shear strength of the soil was high.

Reference:

Shibata, T., Sekiguchi, H., and Yukitomo, H. (1982). "Model test and analysis of negative friction acting on piles." *Soils and Foundations*, 22(2), 29-39.

Overview:

The study by Shibata et al. 1982 focuses on answering three question regarding the influence of negative friction of groups of piles: 1) What is the net effect of negative skin friction acting on a group of vertical piles?, 2) What bending moments and deflections are produced in batter piles due to negative skin friction?, and 3) What percent reduction in downdrag-induced loads and bending moments can be achieved through the use of bitumen as a friction reducer. The questions are addressed using a laboratory-scale model which can simulate the downdrag forces acting on piles due to an applied uniform pressure and by using a theoretical approach developed by Broms and Fredriksson (1976). Additional details of the investigation related to batter piles is given below.

Description of the experimental apparatus:

The apparatus developed by the authors consists of a cylindrical steel tank with an outside diameter of 1485mm and a height of 1000mm. The tank is used to contain the model piles and the clay which consolidates around the piles. The tank has a lid that, when secured, makes the tank air-tight. The bottom of the tank includes a base layer of sand and drainage ports to allow for water expelled from the clay during consolidation to exit the apparatus. The tips of the model piles react against load cells fixed to the bottom steel plate of the tank. In this arrangement, the neutral plane will be at the pile tips. The clay sample consists of kaolin and is formed around the model piles from slurry and allowed to consolidate under self-weight. During a test, a vinyl membrane is placed over the top of the model piles and clay sample. With the tank lid in place, air pressure is applied through a port in the lid which exerts a vertical pressure on the piles and clay. As the clay consolidates, the load acting on the pile is monitored using the load cells. Piezometers are also included in the tank to measures pore pressures in the clay and track the progress of primary consolidation.

Three series of tests were performed at different consolidation pressures using two rows of three piles set at a batter of 15 degrees from vertical. Each steel pile had an outer diameter of 60mm, a wall thickness of 1.2mm, and a length of 600mm. A series of strain gauges were installed on the inner surface of the battered model piles to measure bending moment. One of the three tests series used bitumen to determine its effectiveness at reducing downdrag loads and bending moments.

Experimental results for batter piles:

Downdrag load

The unit downdrag load acting on a single vertical pile is expressed by the authors according to Equation 3. In this expression, τ_z is the mobilized unit shaft friction at a depth *z* below the ground surface, δ'_m is the mobilized effective interface friction angle between the pile and the surrounding clay, K is the lateral earth pressure coefficient, and σ'_v and σ'_h are the magnitudes of effective vertical and horizontal stress, respectively. The value of τ_z at a given depth increases with relative displacement of the soil relative to the pile to reach a limiting value.

$$\tau_z = \sigma'_h \tan\delta'_m = K\sigma'_v \tan\delta'_m \qquad 3$$

The contribution of group effects results in different magnitudes of downdrag force exerted on the piles depending of their position within the group. As shown in Figure 8 in the paper, piles with exposure to the perimeter of the pile group are subjected to higher downdrag loads than piles found in the interior of the group. This figure also shows that there exists an approximately linear relationship between the unit downdrag stress and the magnitude of applied consolidation pressure. This observation suggests that the lateral earth pressure coefficient and interface friction angle are not significantly affected by the magnitude of effective vertical stress for the modeling conditions used in the study. The ratio between the unit downdrag stress and the consolidation pressure for batter piles was determined by the authors to be only slightly smaller than the value of 0.18 observed using vertical piles. The authors contend that the relationship given in Equation 3 for vertical piles can be applied to batter piles and yield conservative results. In the test using bitumen as friction reducer, the authors observed a 50 percent reduction in measured downdrag load compared to the uncoated cases.

Flexural behavior

Shibata et al. use the layout given in Figure 1 to present their discussion of the flexural behavior of batter piles. Here, x represents the distance measured from along the length of the batter pile, with length, *L,* penetrating the clay stratum. The authors chose to average the bending moment measured in the piles at the different positions in the group. They observed that for a position along the x-axis, the measured bending moment increased more or less linearly with consolidation pressure. This linear relationship contrasts to the nonlinear relationship between applied consolidation

pressure and settlement. They also found that the used of bitumen resulted in a 20% reduction in the maximum bending moment compared to the uncoated case.

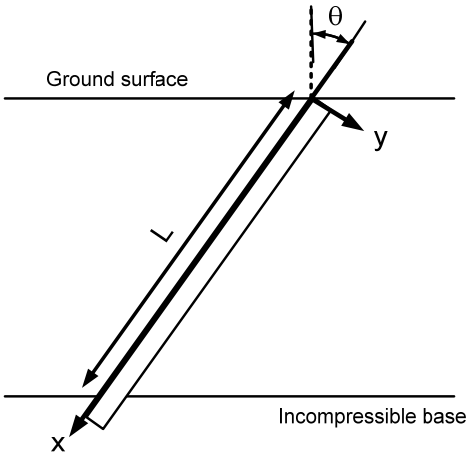

Figure 2: Local axes and orientation for batter pile

Theoretical consideration of the flexural behavior of batter piles

In an effort to theoretically model the flexural behavior of a batter pile subjected to downdrag forces, the authors decided to model the pile as a horizontal elastic beam supported by a Winkler spring foundation. Using these representations, the force relationship given in Equation 4 holds.

$$\frac{EI}{D}\frac{d^4y}{dx^4} + k\left(y - y_s\right) = 0 \qquad 4$$

In this expression *E* is the Youngs modulus of the pile, *I* is the moment of inertia, *D* is the pile diameter, *k* is the coefficient of subgrade reaction, *y* is the pile deflection, and y_s is the ground displacement normal to the x-axis. The authors assume that the ground displacement, y_s, can be related to the vertical surface settlement according to Equation 5 where ρ_o is the magnitude of surface settlement, and □ is the inclination of the pile from vertical. This approach assumes that settlement varies linearly along the length of the pile.

$$y_s\left(x\right) = \rho_o\left(1 - \frac{x}{L}\right)\sin\theta \qquad 5$$

Substituting Equation 5 into Equation 4 yields the differential equation given by Equation 6

$$\frac{d^4y}{dx^4} + 4\beta^4 y = 4\beta^2\rho_0\left(1 - \frac{x}{L}\right)\sin\theta \qquad 6$$

where β is defined by

$$\beta = \left(\frac{kD}{4EI}\right)^{1/4}$$

The authors chose to establish boundary conditions by assuming no pile deflection or moment, *M*, occurs at either end of the pile.

$$\left.\begin{array}{l} y = 0 \text{ at } x = 0 \text{ and } x = L \\ M = 0 \text{ at } x = 0 \text{ and } x = L \end{array}\right\} \quad 7$$

Using the boundary conditions given in (7), the differential equations can be solved to yield solutions for deflection and moment along the pile according to Equations 8 and 9, respectively.

$$y = \rho_o \sin\theta \left[\frac{\cosh\beta x \cdot \cos(\beta x - 2\beta L) - \cosh(\beta x - 2\beta L) \cdot \cos\beta x}{\cosh 2\beta L - \cos 2\beta L} + \left(1 - \frac{x}{L}\right)\right] \quad 8$$

$$M = \frac{2\rho_o \sin\theta \cdot EI\beta^2}{\cosh 2\beta L - 2\cos\beta L}\left[\sinh\beta x \cdot \sin(\beta x - 2\beta L) - \sinh(\beta x - 2\beta L)\sin\beta x\right] \quad 9$$

To assign a value for the modulus of subgrade reaction, Shibata et al. chose to use the recommendation by Broms and Fredriksson (1976) and assume that $k = 10S_u/D$, where S_u, is the undrained strength of the clay. Using the relationships given in Equations 8 and 9, the authors obtained good agreement between the predicted and measured value sof bending moment. They also found that when the batter angle is small, that the bending moment at any value of *x* is proportional to the batter angle.

Reference:

Takahashi, K. (1985). "Bending of a batter pile due to ground settlement." *Soils and Foundations*, 25(4), 75-91.

Overview:

The study by Takahashi applies theoretical modeling, laboratory and field scale experimental modeling, and numerical modeling to the problem of predicting bending moments generated in batter piles due to downdrag forces.

Background on theoretical models:

The author presents a general overview of the existing theoretical methods which treat the pile as an elastic beam which rests on a Winkler spring foundation. The existing approaches include the method develop by Broms and Fredriksson (1976), the method by Sato et al. (1970) which is presented in Japanese, and the method by Shibata et al. (1982). These methods are all fairly similar in their assumptions and treatment of the pile and consolidating clay. The author asserts that the method by Shibata et al. was developed primarily for comparison to their experimental model which was for the case of an end bearing pile. The model by Shibata et al. also assumed that the settlement of the clay varied linearly along the axis of the batter pile. The method by Broms and Fredriksson solves the differential expressions for stress and deflection using trigonometric series, which Takahashi claims make the approach impractical for general use.

The method by Sato et al. (1970) treats the batter pile as an elastic beam which supports the weight on the consolidating clay over an “effective width” and “effective length” which are chosen using judgement. The weight of the soils is thought to act over the area defined by the effective width and length. Below the zone where the pile is considered to carry the weight of the soil, the pile is considered to supported elastically by the bearing stratum. This arrangement is shown in Figure 1, where L’ is the effective length of the pile.

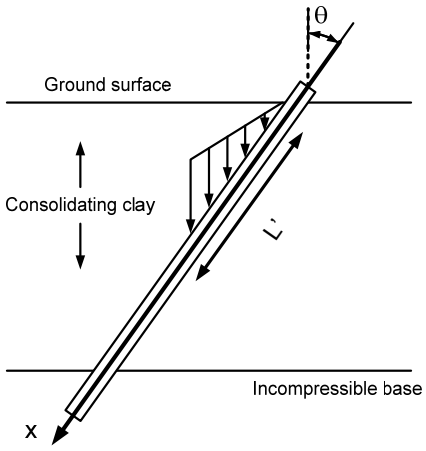

Figure 3: Treatment of pile and foundation soil interaction in method by Sato et al. (1970)

Development of theoretical model by Takahashi:

The theoretical model developed in the current study treats the pile-soil model according to Figure 2. Similar to the other models mentioned above, the current model considers the pile to be an elastic beam resting on a Winkler spring foundation. The enhancements of this model compared to the preceding models in the inclusion of four distinct foundation characteristics and consideration of the non-linear strain profile within the consolidating clay layer. The model also does not assume that displacement and moment is zero at the base of the clay layer, but rather uses the reaction of the pile in the bearing stratum (Layer 1).

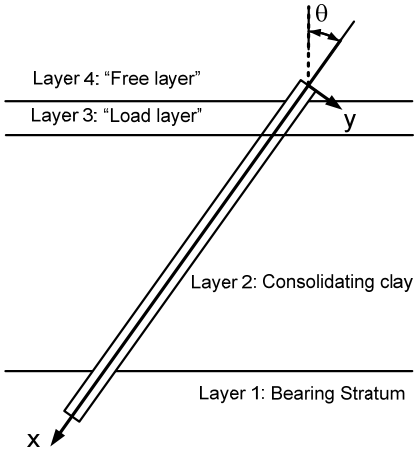

Figure 4: Takahashi's model for soil-pile interaction

Using Winkler springs, the pile is loaded proportionally to the product of the coefficient of subgrade reaction and the relative displacement between the pile and the component of ground settlement normal to the pile axis.

Takahashi provides the assumption of Winkler subsoil according to Equation 1, where *E* represents Youngs modulus of the pile, *I* is the moment of interia of the pile, *W* is the pile width, θ is the pile inclination form vertical, *k* is the coefficient of subgrade reaction, *x* is the distance along the pile axis, and *y* is the deflection normal to the pile axis. The function S(x) represents the vertical ground settlement as a function of the position, x, along the pile axis.

$$\frac{EI}{W}\frac{d^4y}{dx^4} = k\left(S(x)\sin\theta - y\right) \qquad 1$$

For Layer 1, which represents the bearing stratum, the ground settlement is assumed to be zero and Equation 1 reduces to an elastic subgrade reaction for pile deflection.

For Layer 2, which represents the consolidating clay, the function S(x) developed based on the strain profile for one-dimensional consolidation that is occurring with drainage layers at both the top and bottom of the clay layer. The author uses a third-order polynomial to model the settlement profile developed by integrating a second-order (parabolic) strain profile given by Mikasa (1963). This profile is shown in Figure 3 of the paper. Takahashi provides the expression for S(x) according to Equation 2.

$$S(x) = S_\infty \left\{ \frac{x}{d/\cos\theta} - (1-U)\left(\frac{x}{d/\cos\theta}\right)^2 \cdot \left(3 - 2\frac{x}{d/\cos\theta}\right) \right\} \qquad 2$$

In this expression S_∞ is the settlement of the ground surface at the end of primary consolidation, *U* is the degree of consolidation, and *d* is the original thickness of the clay layer. Takahashi warns that the assumed strain profile given in Figure 3 of the paper is only valid when at least a third of the primary consolidation has completed. Solving Equation 1 for Layer 2 yields the expression for pile deflection normal to the pile axis given by Equation 3 where A_1 through A_4 are constants and z_1 through z_4 are defined below.

$$y = A_1z_1 + A_2z_2 + A_3z_3 + A_4z_4 + S(x)\sin\theta \qquad 3$$

$$z_1 = \cos\beta x \cdot \cosh\beta x$$

$$z_2 = \frac{1}{2}\left(\sin\beta x \cdot \cosh\beta x + \cos\beta x \cdot \sinh\beta x\right)$$

$$z_3 = \frac{1}{2}\sin\beta x \cdot \sinh\beta x \qquad 4$$

$$z_4 = \frac{1}{4}\left(\sin\beta x \cdot \cosh\beta x - \cos\beta x \cdot \sinh\beta x\right)$$

$$\beta = \sqrt[4]{\frac{Wk}{4EI}}$$

Layer 3 is defined as the "load layer" and is used to represent the embankment load. Takahashi does not provide a clear explanation of how this layer contributed to the deflection and bending moment produced in the pile, however the adapted form of Equation 1 for the Layer is given by Equation 5. In this expression, γ is the unit weight of the embankment material and x_o is the distance along the pile axis from the pile tip to the top of Layer 3.

$$\frac{EI}{W}\frac{d^4y}{dx^4} = \gamma\left(x_o - x\right)\sin^2\theta\cos\theta \qquad 5$$

Inspection of Equation 5 allows for an explanation of the contribution of Layer 4 to the deflection and bending moment to be developed. The vertical stress at a depth, z, measured from the top of Layer 4 is equal to $\gamma\left(x_o - x\right)\cos\theta$ and the component of the vertical stress which acts normal to the pile axis is equal to $\gamma\left(x_o - x\right)\cos\theta\sin\theta$. The sine in Equation 5 is squared and at this time is it not understood why this is. Using Takahashi's expression given by Equation 5, the deflection of the pile can be determined according to Equation 6, where, A_1 through A_4 are constants and A_5 and A_6 and given below.

$$y = A_1 + A_2x + A_3x^2 + A_4x^3 + A_5x^4 + A_6x^5 \qquad 6$$

$$A_5 = \frac{1}{24}\frac{W\gamma}{EI}x_o\sin^2\theta\cos\theta$$

$$A_6 = -\frac{1}{120}\frac{W\gamma}{EI}\sin^2\theta\cos\theta \qquad 7$$

Layer 4 is the "free layer" which corresponds to the portion of the pile that extends above the ground surface. Since the free layer has a coefficient of subgrade reaction equal to zero the solution to Equation 1 for Layer 4 is equal to Equation 8.

$$y = A_1 + A_2 x + A_3 x^2 + A_4 x^3 \quad 8$$

Takahashi applies linear algebra to set up the expressions relating the pile behavior to the soil deflections for each of the four layers. These expressions are given by Equations 9 through 14 in the paper. The process to solve the systems of equations is left unclear. Takahashi mentions limiting the number of rows in the matrices to four, which in the case of Layer 2 requires eliminating a row, to make solving the expressions possible. He also does not provide details on how the unknown constants should be determined other than that the "sixteen constants could be solved by the use of twelve continuity conditions at three boundaries between the layers and of four boundary conditions at pile top and pile tip."

Experimental Model Tests:

The test apparatus used in this study consists of a cylindrical steel tank with an inside diameter of 2520mm and a height of 1700mm. A 1130mm sample of clay was prepared saturated in a remolded state and was sandwiched between upper and lower sand drainage layers (50-100mm thick each). The piles used consist of thin rectangular steel plates with a length of 1780mm, a width of 75mm, and a thickness of 9mm. A group of eight piles was installed into the remolded clay sample at a batter angles of 5, 10, 15, or 20 degrees. The piles in opposing pairs were installed at the same batter angle and all four angles of batter were present in the group simultaneously. Takahashi doesn't describe installation process or how much smearing occurs, but mentions that a 'special device' was used. Each pile was instrumented with seventeen strain gauges spaced every 10 cm along its length to measure the bending moment.

Consolidation of the clay was induced by placing a 220mm layer of steel shot over the upper sand layer corresponding to a consolidation pressure of 10kN/m^2. The ground settlement, pile deflection, and bending moments were monitored for 100 days after placement of the steel shot. The distribution of bending moment if the pair of piles inclined at 20 degrees is shown in Figure 7 of the paper. Takahashi observed a proportional relationship between the maximum bending moment and the pile inclination angle. This is similar to the result observed by Sabata et al. (1982). Takahashi also found that the relationship between the magnitude of surface settlement and maximum bending moment to be near linear. Shibata et al. (1982) observed a near linear relationship between the bending moment at a given position along the pile and the consolidation pressure.

Finite element analysis of model tests:

Takahashi does not provide much detail on the methods or software used to generate a finite element model of the experimental conditions. He used elastic constitutive

relations for both the pile and soil and modeled the experimental tests in two dimensions. He was not able to obtain reasonable agreement between the numerical and experimental results and determined it was necessary to model the problem in 3D. Using the 3D model he was able to obtain reasonable agreement for the magnitude of maximum bending moment for inclination angles of 10 and 20 degrees.

Evaluation of experimental results using Sato's Method:

Takahashi was able to obtain good agreement between the measured and predicted values of deflection, deflection angle, bending moment, shear force, and soil pressure acting on the pile for an inclination angle of 20 degrees. It seems like a trial and error approach is necessary to adjust the effective width and length values to get the predicted values to agree with the experimental results. Sato et al. recommend an effective width that is three times the pile width. The data fit obtained using Sato's method, once calibrated, was better than the fit obtained using the 3D FE model.

Evaluation of experimental results using Takahashi's method:

Takahashi achieved good agreement between the measured and predicted values of deflection, deflection angle, bending moment, shear force, and soil pressure acting on the pile for an inclination angle of 20 degrees. He found the best fit was obtained when he assumed an elastic soil reaction for both the clay and sand layers and treated the steel shot as a load layer.

Field tests:

An instrumented field test consisting of a 2x2 group of steel pipe piles with a batter angle of 15 degrees was reported by Takahashi (1985), Sato et al. (1987) and Sawaguchi (1989). An 2.5m embankment with plan dimensions of approximately 40m x 25m was placed to initiate consolidation of the roughly 30m thick soft clay deposit. The piles were installed through the embankment and the clay to bear on a stratum of stiff clay stratum with gravel. The piles extended above the ground surface and were hinged in pairs. The spacing between the piles is not provided in the paper. Two of the piles were coated with bitumen to observe the effects on deflection and moment. Extensive instrumentation was used in this study to monitor settlement, pile deflection, and pile moment. A summary of the instrumentation is given in Table 1 of the paper. The instrumentation was monitored for a year while consolidation proceeded. The distributions of axial force and bending moment for the coated and uncoated piles is shown in Figures 22 and 23 of the paper. Takahashi found that while the bitumen coating significantly reduced down drag loads, the coating actually resulted in slightly higher bending moments in the upper portion of the pile. Takahashi 's laboratory finding that the maximum bending moment increased linearly with the ground settlement was again observed at the field scale.

Finite element analysis of model tests:

In an attempt to model the field results, Takahashi again found that 2D finite element modeling did not adequately capture the interaction between the pile and the soil. He did not pursue modeling the field tests in 3D.

Evaluation of experimental results using Sato's Method:

Takahashi again applied a trial and error approach to selecting appropriate values for the effective width and length. In the paper, he notes the strong influence of the choice of effective width on the results. He was able to obtain reasonable prediction of bending moment along the length of the pile, although the predicted location of maximum moment did not correspond to the measured location.

Evaluation of experimental results using Takahashi's method:

Takahashi provides some detail on how he decided to divide the soil profile at the field test site into the Layers used in his theoretical model. He ultimately decided break the pile into four sections. He included a free layer, a load layer to capture the influence of the embankment, and two clay layers to simulate the soft clayey soil. He found some sensitivity of the model to the location where he divided the clay layer in to upper (compressible) and lower (less compressible) regions. His model did not show much sensitivity to the choice of soil unit weight, which is equivalent to changing the width adjustment factor. Takahashi also found that the selection of the thickness for the embankment layer made little difference on the results. Again, he found that his model was able to capture the interaction between the pile and soil better than either Sato's method or finite element analysis.

Reference:

Sawaguchi, M. (1989). "Prediction of bending moment of a batter pile in subsiding ground." *Soils and Foundations*, 29(4), 120-126.

Overview:

The technical note by Sawaguchi briefly discussions existing methods by Sato et al. (1970), Shibata et al. (1982), Takahashi (1985), and Sabato et al. (1987) for estimating the bending moment induced in a batter pile due to settling ground. Sawaguchi draws from elements from each of the aforementioned methods and presents his analytical model of the problem. He provides chart solutions developed from computer solutions of his model.

Development of analytical model:

Sawaguchi's approach introduces a different way to consider the vertical loading of the batter pile near the ground surface. Rather than use a "loading layer" like Takahashi, Sawaguchi assumes that the upper portion of the pile is loaded in a way similar to a positive projecting conduit. For the remainder of the pile, Sawaguchi adopts the assumption of Winkler ground common to the other methods. The justification for the treatment of the upper pile as a positive projecting conduit is based on numerous field observations of ground deformation around the batter pile. This deformation can be generalized as having a zone directly over the surface projection of the pile where significantly less surface settlement occurs compared to other areas. Sawaguchi's analytical model is shown in Figure 1.

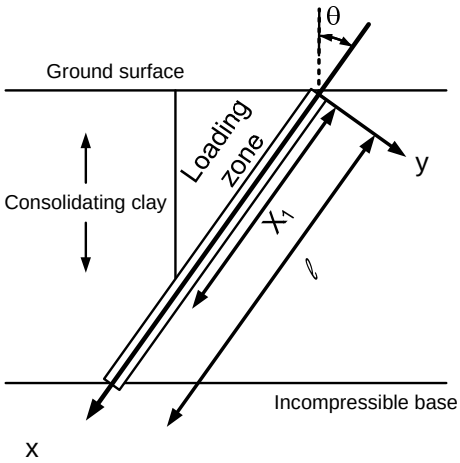

Figure 5: Analytical model developed by Sawaguchi (1989)

Using the assumption of a positive projecting conduit for loading within the upper portion of the pile, the earth pressure acting on the pile can be estimated using Spangler's formula. For a pile top flush with the ground surface, the relationship between pile deflection and soil pressure in the loading zone ($0 \le x \le X_1$) is given by Equation 1.

$$EI\frac{d^4y_1}{dx^4} = \frac{B^2\gamma\sin^2\theta}{2K\mu}\left(\exp\frac{2K\mu\cos\theta}{B}X - 1\right) \quad 1$$

In the expression above, Young's Modulus of the pile is represented by E, the moment of inertia of the pile by I, B is the pile width, $y_1$is the deflection of the pile within the loading zone, γ is the unit weight of the surrounding soil, K is the coefficient of lateral earth pressure, μ is the coefficient of friction between the soil supported by the pile and the surrounding soil, θ is the inclination f the pile from vertical, and y_1 is the pile deflection within the loading zone. Below the loading zone ($X_1 \le x \le \ell$), Sawaguchi considers the pile to be supported by Winkler soil according to Equation 2.

$$EI\frac{d^4y_2}{dx^4} = Bk_h\left(S(x)\sin\theta - y_2\right) \quad 2$$

Here, y_2, is the deflection of the pile below the loading zone, k_h is the horizontal coefficient of subgrade reaction, and S(x) expresses the variation of vertical settlement along the pile axis. Sawaguchi applies the same assumption as Shibata et al. (1982) and assumes linear variation of the vertical settlement with depth according to Equation 3, where S_o is the settlement at the ground surface.

$$S(x) = S_o\left(1 - \frac{x}{\ell}\right) \quad 3$$

After substituting Equation 3 into Equation 2, Sawaguchi solves Equations 1 and 2 assuming no moment exists at either end of the pile and that the deflection, deflection angle, moment, shear force, and pressure in the pile at the interface of the loading layer with the Winkler soil layer are equal.

Since no closed solution for the equations exists, Sawaguchi developed normalized design charts. The charts relate normalized moment, $\left(M\ell/EI\right)$, to non-dimensional parameters listed below.

$$\beta\ell = \sqrt[4]{\frac{k_h B}{4EI}}\ell$$

$$\nu\ell = \frac{2K\mu\ell\cos\theta}{B}$$

$$\varepsilon\ell^3 = \frac{B^2\gamma\ell^3\sin^2\theta}{2K\mu EI} \qquad 4$$

$$\xi = \frac{S_o}{\ell}\sin\theta$$

Field Scale Tests:

An instrumented field test consisting of a 2x2 group of steel pipe piles with a batter angle of 15 degrees was reported by Takahashi (1985), Sato et al. (1987) and Sawaguchi (1989). An 2.5m embankment with plan dimensions of approximately 40m x 25m was placed to initiate consolidation of the roughly 30m thick soft clay deposit. The piles were installed through the embankment and the clay to bear on a stratum of stiff clay stratum with gravel. The piles extended above the ground surface and were hinged in pairs. The spacing between the piles is not provided in the paper. Two of the piles were coated with bitumen to observe the effects on deflection and moment. Extensive instrumentation was used in this study to monitor settlement, pile deflection, and pile moment. A summary of the instrumentation is given in Table 1 of the paper. The instrumentation was monitored for a year while consolidation proceeded. The distributions of axial force and bending moment for the coated and uncoated piles is shown in Figures 22 and 23 of the paper. Takahashi found that while the bitumen coating significantly reduced down drag loads, the coating actually resulted in slightly higher bending moments in the upper portion of the pile. Takahashi 's laboratory finding that the maximum bending moment increased linearly with the ground settlement was again observed at the field scale. The measured bending moments induced by the settlement were compared to values predicted using Sawaguchi's analytical model. Sawaguchi applied an empirical correlation using the unconfined strength of the clay to estimate the coefficient of horizontal subgrade reaction. Using the input parameter values given in Table 1 of the paper, Sawaguchi was able to obtain good agreement between the measured and predicted values of bending moment. He concludes the discussion of the field-scale study by comparing the measured value of maximum bending moment to the values predicted using the methods by Sato et al. (1987) and Takahashi (1985). For the case at hand, the two existing methods and the Sawaguch's method all predicted values close to the measured maximum bending moment.

Reference:

Rao, S. N., Murthy, T. V. B. S. S., and Veeresh, C. (1994). "Induced bending moments in batter piles in settling soils." *Soils and Foundations*, 34(1), 127-1

Overview:

The study by Rao et al. (1994) includes the development of an analytical model for estimating the pressure acting on a single batter pile due to settlement of the surrounding soil. The model divides the consolidating soil surrounding the pile into three zones: 1) a wedge-shaped zone overlying the pile that is completely supported by the pile, 2) a transitional 3D zone of arching that sheds vertical stress to the pile, 3) the soil beyond the zone of arching that is unaffected by the presence of the pile. The principal deviation of the proposed method to the methods by Sata, Takahashi, and Shibata, is the consideration of separation developing between the pile and the underlying soil. The authors contend that soil settlement can leave the pile unsupported and it is more appropriate to model the pile as a clear spanning beam with either free or fixed end supports. The pressure acting on the free spanning beam representing the batter pile is determined using the combined pressures produced by the fully –supported and arching zones.

The study also includes a description of a laboratory scale study carried out to support the provide support for the proposed theoretical model.

This paper contains several errors in the presentation of the mathematical development of the model. These errors include typographical mistakes, unreasonable assumptions, and improper application of soil mechanics. These problems are pervasive enough to essentially discredit the authors' assertions.

Development of analytical model:

Estimation of pressure acting on the batter pile

The authors introduce the concept for their analytical model by describing the probably shape of the volume of soil that is either directly supported by the pile or supported by arching. The end result of this discussion is the treatment of the soil mass supported by the pile as a three-dimensional wedge that is defined by a vertical plane extending from the tip of the pile and a width equal to two pile diameters. This defined soil volume is provided in Figure 1 of the paper, however the figure and supporting text suggest that the width of the wedge is three pile diameters instead of two. It is not until the mathematical development is presented that is becomes apparent that the soil wedge has a thickness of two pile diameters. The concept behind the use of a wedge, is that

the soil mass within the wedge is considered to be completely supported by the pile and that shear resistance between the sides of the wedge and the surrounding soil reduces the load carried by the pile. No shear force is considered to develop between the face of the wedge and the surrounding soil. This concept is illustrated in Figure 1.

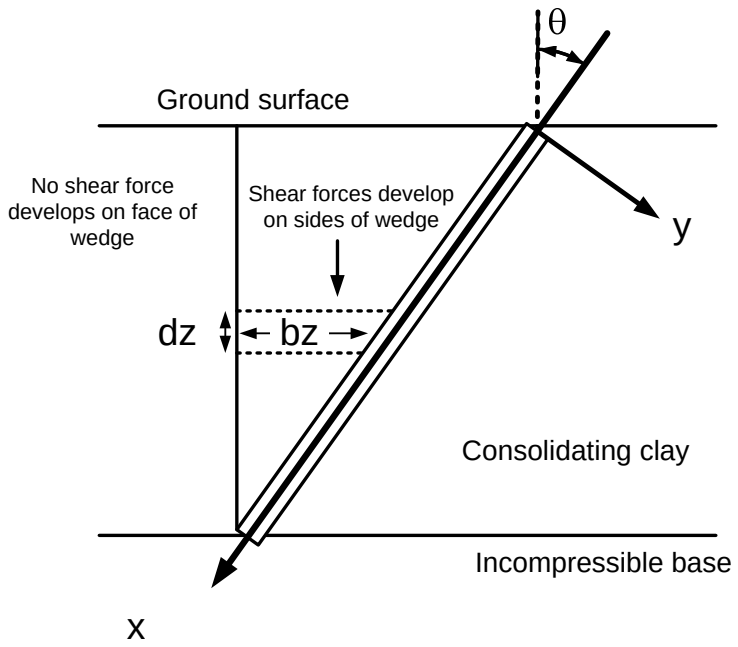

Figure 6: Wedge of soil supported by pile used in the analytical model developed by Rao et al.

Using the wedge defined in Figure 1 and assuming that shear strength is fully mobilized between the sides of the wedge and the surrounding consolidating soil, vertical equilibrium is satisfied by Equation 1.

$$\sigma_{vz}(2R)b_z + \gamma(2R)b_z dz - \left(\sigma_{vz} + \frac{d\sigma_{vz}}{dz}dz\right)(2R)(b_z) - 2\tau_z b_z dz = 0 \qquad 1$$

In this expression 2R, is the width of the soil wedge and R is assumed to be equal to the diameter of the pile, b_z and dz are the dimensions of a unit of soil within the wedge, τ_z is the peak shear strength along the side of the wedge, σ_{vz} is the total vertical stress, and γ is the total unit weight of the soil.

The authors then mistakenly define the peak shear strength at the sides of the wedge at a particular elevation according to Equation 2 where k is the at-rest earth pressure coefficient estimated using Jaky's formula, $k = (1 - \sin\theta)$.

$$\tau_z' = c' + (k\sigma_{vz} - u)\tan\phi' \qquad 2$$

The error of multiplying the total vertical stress by the earth pressure coefficient is incorporated into subsequent development of the analytical model. Later in the development, Rao et al. decide to set pore pressure to zero using an rationale that is incorrect on the basis of soil mechanics and the model development. This adjustment does however remedy the improper calculation of horizontal stress acting on the face of the wedge. Any potential user of this method should know to use effective unit weights and drained strength parameters as input. The end result of the expression used to estimate the pressure acting on the pile is given by Equation 3, where *x* is the distance along the pile axis from the head of the pile, *d* is the pile diameter and, q_s is the applied surcharge due to the embankment.

$$P_{vx} = q_s d + \gamma\left(d + 2R\right)x\cos\theta + 2R\left(q_s - \frac{Q}{P}\right)\cdot\left(1 - \exp\left(-P\cdot x\cos\theta\right)\right) \qquad 3$$

$$P = \frac{k\tan\phi}{R} \qquad Q = \gamma - \frac{c}{R}$$

Rao et al. use Equation 4 to resolve the vertical pressure P_{vx} determined using Equation 3 into components acting normal and coincident to the pile axis. Here, f_{nx} is the component of vertical stress acting along the pile axis and q_{tx} is the component which acts normal to the pile.

$$f_{nx} = P_{vx}\cos\theta$$
$$q_{tx} = P_{vx}\sin\theta \qquad 4$$

As shown in Equation 5, the next step in the procedure by Rao et al. is to integrate the pressure acting normal to pile over its length to get the total lateral force. They then divide this force by the pile length to yield a uniformly distributed pressure which induced bending moment. This approach completely disregards the impact of non-uniformly distributed lateral soil pressure on the induced bending moment. Rao et al. also make the assumption that the axial force in the pile has no influence on measured bending moment.

$$w = \frac{1}{L}\int_0^L q_{tx}\,dx \qquad 5$$

Using the uniform pressure, w, Rao et al. estimate bending moment in the pile by considering two typical support conditions for a free spanning beam. The first condition

is for pinned-pinned end supports, for which the bending moment along the pile is given by Equation 6, and the second is for fixed-fixed end supports given by Equation 7.

$$M_x = \frac{wx}{2}(L - x) \quad 6$$

$$M_x = \frac{w}{12}\left(6Lx - L^2 - 6x^2\right) \quad 7$$

Verification of proposed analytical model using experimental model:

An experimental model consisting of a square steel tank with dimensions of 1200mm x 1200mm x 1200mm was constructed to house a square grouping of batter piles with a batter angle of 10 degrees. The model piles consisted of aluminum pipes with a length of 725mm, an outer diameter of 38.1mm, and a wall thickness of 1.5mm. The four piles were fixed to a square top plate and arranged so that a pile extend from each face of the plate. This arrangement is shown in Figure 4 of the paper.

To conduct a test, the piles were placed in the empty tank and a 50mm layer of sand was placed to provide drainage. Next, 570mm of clay was placed and tamped moist in 50mm lifts. Above the compacted clay layer, another 100mm of sand was provided for a upper drainage layer. A surcharge was applied to the steel plate fixed to the piles to induce settlement of the compacted clay. At this point, the text and figures are confusing as to whether the steep plate covered the entire sample surface or just the 200mm x 200mm plate shown in Figure 4.

The model piles were instrumented using strain gauges to measure bending moment. The results on tests performed using different surcharge loads are shown in Figures 6 and 7 of the paper. The authors use this information to assess their proposed model. First they calculated the pressure acting normal to the pile axis using Equation 3. After integrating the soil pressures over the length of the pile and determining an equivalent uniform distributed pressure, the authors estimated bending moments using the beam support conditions given in Equations 6 and 7. They concluded that the bending moment distribution estimated assuming the fixed-fixed end supports more closely matched the experimental results.

Reference

Hance, J., and Stremlau, T. (2009). "Lateral load on piles subjected to downdrag." Internal document, Eustis Engineering, Metairie, Louisiana.

Summary of Method:

This approach considers that the pile is loaded by downdrag above the neutral plane and that the distribution of the force acting normal to the pile axis can be approximated by a triangular distribution. The magnitude of downdrag force is determined by treating the batter pile as a vertical pile and estimating the static capacity of the pile shaft and tip. The neutral plane is estimated using an approach which will be described below. The portion of the ultimate shaft capacity that is above the neutral plane is taken to be the downdrag load. The method estimates bending moment induced in the batter pile by treating the length of pile above the neutral plane as a free spanning elastic beam supported at both ends by pinned connections. The portion of the pile below the neutral plane is neglected in the analysis.

Development and implementation of the Method:

This method is described below following the example provided in the reference. Calculation errors or questionable assumptions will be pointed out, however for the purposes of maintaining continuity with the reference document, the original values and assumptions will be carried through the procedural steps.

1. *Assign the structural loads, pile elevations, and amount of pile batter*.

   For the example:

Butt elevation	=	El 0
Tip elevation	=	El -110
Pile batter (θ)	=	2V:1H or 26.56° from vertical

   For the elevations provided the required length of the batter pile, L, would be

   $$L = \left[0^{EL} - \left(-110^{EL}\right)\right] / \cos(26.56) \approx 123 ft$$

   The length used in the calculation is L = 110 ft, which does not account for the pile batter. The structural loads considered in the example problem range from 53 to 103 kips.

2. *Determine the static capacity and ratio of the structural load to the ultimate static capacity*

The authors consider this ratio to be the factor of safety, but it does not account for the downdrag load. The ultimate static capacity of the 14" H-pile was calculated by the authors using a software program. They do not indicate what software was used or the method of estimation. The breakdown of the ultimate pile capacity is given below:

Ultimate shaft capacity (L = 110ft)	=	279 kips
Ultimate tip capacity	=	14 kips
Combined ultimate capacity	=	293 kips

The ratio of the structural load to the ultimate load, R_L, for the range of structural loads is given below.

$$R_L = \frac{293 kips}{53 kips} = 5.5$$

$$R_L = \frac{293 kips}{103 kips} = 2.8$$

3. *Determine the neutral plane of the pile.*

For this step the authors develop their own technique for estimating the location of the neutral plane. The primary assumptions of this approach are given below.

i. The neutral plane can be determined relative to the pile axis and does not depend on batter angle
ii. The downdrag pressure increases linearly with depth.
iii. The pile cross section is assumed to be constant with depth
iv. The ultimate tip resistance is assumed to increase as a fraction of the shaft resistance

Figure 1 shows the forces acting on a vertical pile subjected to downdrag where P_i is the applied load, F_D is the total down drag load, F_R is the ultimate resisting skin friction, and Q_T is the ultimate tip resistance. The unit skin friction between the pile and soil, k, is defined, but the author's do not explain how it is determined. One approach for estimate the unit skin friction given by Equation 1, γ' is the effective unit weight of the surrounding soil, USR is the Undrained Strength Ratio of the clay, and α is a coefficient relating undrained strength to shaft resistance. For an increment of length along the pile, dx, the shaft friction, f_s, is given by Equation 2, where *s* is the surface area of the pile over the length increment.

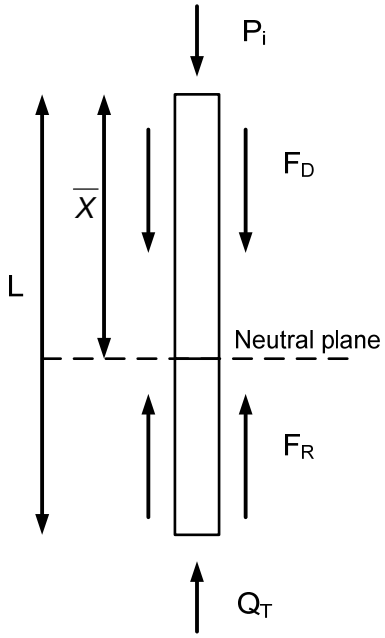

Figure 7: Forces acting on vertical pile subjected to downdrag

$$k = \alpha\gamma'(USR) \quad (1)$$

$$f_s(x) = kxsdx \quad (2)$$

For a pile with a constant cross-sectional area, the ultimate shaft friction over the entire length of the pile is given by Equation 3.

$$F_S = \frac{ksL^2}{2} \quad (3)$$

The authors assume that the ultimate tip resistance can be expressed as a fraction, n, of the ultimate shaft capacity calculated in Equation 3. Such a relationship is given in Equation 4.

$$Q_T = \frac{nksL^2}{2} \quad (4)$$

Typically, static capacity analyses determine ultimate tip resistance as $Q_T = q_t A_T$, where q_t in the unit tip resistance and A_T is the area enclosed by the outer edges of the pile tip. For piles in cohesive soils, the unit tip resistance depends on the ultimate

bearing capacity of the clay and can be estimated by Equation 5, where S_u is the undrained strength of the clay.

$$Q_T = 9 S_u A_T \quad (5)$$

For clays with a constant USR, Equation 5 can be modified to Equation 6.

$$Q_T = 9(USR) L \gamma' A_T \quad (6)$$

The assumption that the ultimate tip resistance can be expressed as a fixed ratio of the shaft resistance is unreasonable. Combining Equations 1, 3, 4, and 6 into Equation 7 shows that the ratio between tip capacity and shaft capacity cannot be expressed independently of pile length.

$$\frac{Q_T}{F_s} = n = \frac{\alpha s L}{18 A_T} \quad (7)$$

Using the proposed method, the ultimate capacity of the pile, F_U, is equal to the sum of the shaft resistance and the tip resistance. The combination of Equations 3 and 4 yields the ultimate pile capacity given by Equation 8.

$$F_U = (1+n)\frac{ksL^2}{2} \quad (8)$$

The applied structural load, P_i, can be expressed using the ratio R_L according to Equation 9. The authors do not point out that the ratio, R_L, is determined for a specific pile length if the applied load is known.

$$P_i = \frac{(1+n)ksL^2}{2R_L} \quad (9)$$

The down drag force, F_d, and the ultimate shaft resistance below the neutral plane is given by Equations 10 and 11. In Equation 10, the authors chose to divide the negative shaft resistance by a constant,c. They do not provide guidance on the values to use for the constant and they use a value of unity in the example problem.

$$F_D = \frac{ks\overline{X}^2}{2c} \quad (10)$$

$$F_R = \frac{ks}{2}\left[L^2 - \overline{X}^2\right] \quad (11)$$

The determination of the neutral plane is accomplished by summing the forces acting along the axis of the vertical pile according to Equation 12.

$$P_i + F_D = F_R + Q_T \quad 12$$

Using their assumptions, the authors express the ratio of the distance along the pile to the neutral plane to the pile length by Equation 13.

$$\frac{\overline{X}}{L} = \sqrt{(1+n)\left(\frac{R_L - 1}{R_L}\right)\left(\frac{c}{c+1}\right)} \quad 13$$

The authors assert that Equation expresses the neutral plane as a non-dimensional fraction of pile length, however the ratio is only valid for the pile length at which *n* and R_L were evaluated.

4. Set up free-spanning elastic beam problem

Using the software evaluation performed in Step 2, the authors determine the ultimate shaft capacity at the elevation of the neutral plane estimated in Step 3. They consider this value of shaft resistance to be the downdrag load, F_D^*. Different notation is used since this value of downdrag force is evaluated differently than the down drag force used in Step 3 to estimate the neutral plane. The authors then take the value of downdrag force determined using the software and subtract it from the shaft capacity over the entire length of the pile to determine the shaft resistance, F_R^*. Next, they evaluate downdrag force again by taking the combined resistances of the shaft and tip and subtract the applied load. This process is expressed below.

$$F_R^* = F_S - F_D^* \quad 14$$

$$F_D^{**} = F_R^* + Q_T - P_i \quad 15$$

After the down drag force is determined according to Equation 15, the authors find the component that would act perpendicular to the axis of a batter pile. This force has a value of 102 kips in the example problem. There are mathematical errors in the use of trigonometry to find the perpendicular component of down drag load. First, they divide the value of down drag force by the pile batter expressed as a ratio of vertical run to horizontal run. In the example problem, this batter ratio is 1H:2V, so the downdrag force is divided by 2. This gives the downdrag force acting in the horizontal direction. Next the authors find how much of the horizontal downdrag force acts perpendicular to the pile, $F_{D,orth}$. To do this they multiply the value by the cosine of the batter angle. For the

example problem, this translates to multiplying the vertical downdrag force by 0.5 and then again by 0.89 to yield a force of 55 kips, which is equivalent to multiplying the vertical force by the sine of the batter angle. The final step to this process is to convert the force into a triangular distributed pressure according to Equation 16.

$$w = \frac{2F_{D,orth}}{\overline{X}} \qquad 16$$

For the example problem triangular distributed load is found as shown below.

$$w = \frac{2(55kips)}{72.6ft} = 1.5\,kips/ft$$

5. Solve free-spanning elastic beam problem

The authors determine the maximum bending moment in the pile by treating the portion of the pile above the neutral plane as a free-spanning beam with pinned end connections. The soil pressure, W, acting perpendicular to the pile axis is considered to act as a triangular pressure distribution according to Equation 16. The maximum bending moment of a beam subjected to the loading and support scenario shown in Figure 2 can be determined according to Equation.

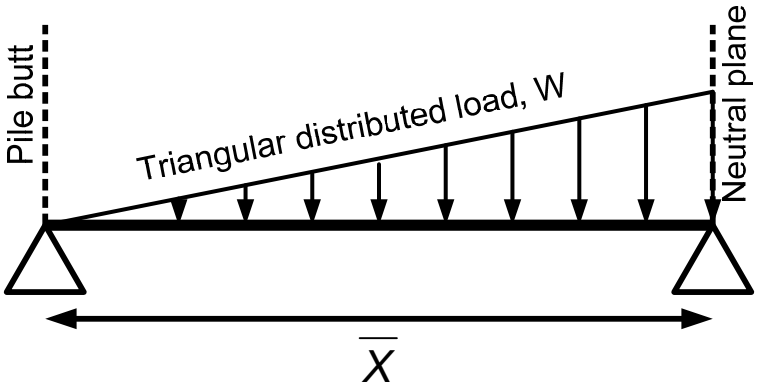

$$M_{max} = \frac{wL^2}{9\sqrt{3}} \qquad 17$$

This equation was checked against published sources and found to be correct. For the example problem the maximum bending moment was determined to be 508 kip-ft/ft as shown below.

$$M_{max} = \frac{1.5\,kips/ft\,(72.6ft)^2}{9\sqrt{3}} = 508\,\text{kip-ft}/ft$$

Determining the maximum bending moment in this way assumes the following:

i. There is no contact between the pile and the underlying soil above the neutral plane
ii. The bending moment at the top of the pile and at the neutral plane is zero.
iii. The distribution of downdrag force can be approximated by a triangular distribution

Reference:

Stremlau, T., and Hance, J. (2009). "Lateral loads on piles." Internal document, Eustis Engineering, Metairie, Louisiana.

Overview:

This approach uses the commercial software LPILE (Ensoft) to estimate the bending moments induced above the neutral plane in batter piles subject to downdrag force. The procedure requires determination of the vertical settlement resulting from fill placement. The authors used Settle^{3D} (RocScience) for their calculations which are for the Sellars Canal (WBV-74). The relative vertical settlement between the soil and the pile is determined by subtracting a magnitude of vertical pile displacement. In the example problem, the value of vertical pile displacement is 1.9 inches. It is not clear how this value was determined but the method assumes that the entire length of the pile displaces vertically by the same amount. The component of relative vertical settlement which acts perpendicular to the pile axis is determined by multiplying the relative settlement magnitude by the sine of the batter inclination from vertical. The component of relative settlement normal to the pile axis is used as the displacement magnitude, y, on p-y curves developed in LPILE for several positions along the length of the pile. The soil pressures corresponding to the displacements are determined for the portion of the pile above the neutral plane and plotted as shown in Figure 1. From the available information, it appears that the neutral plane is determined using the approach proposed by Hance and Stremlau (2009).

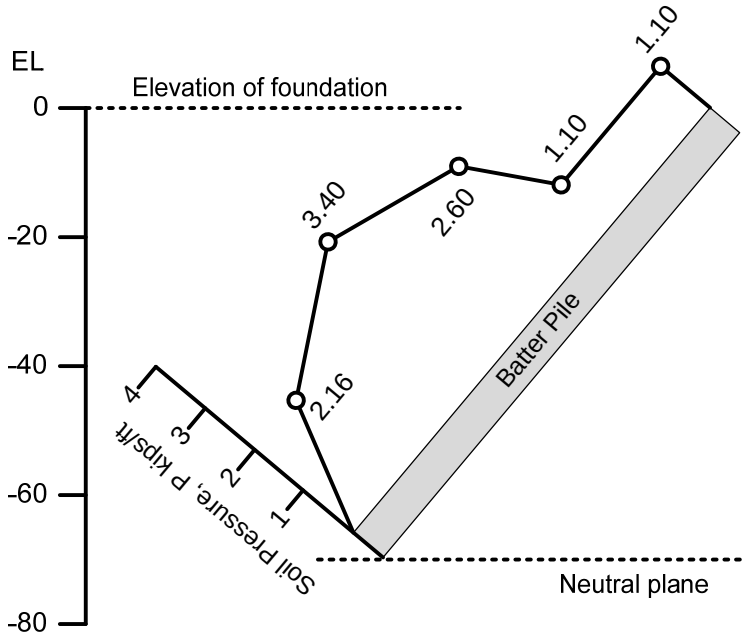

Figure 8: Distribution of soil pressure above the neutral plane

A plot like the one shown in Figure 1 is used to express the distribution of soil pressures acting normal to the axis of the batter pile. The reference explaining this approach does not carry the procedure through to the point of calculating bending moment. From the available information, it appears that the pile length above the neutral plane is treated as an elastic beam with pinned end supports. The bending moments are calculated by applying the pressure distribution determined using the p-y curves from LPILE to the elastic beam representing the pile.

Appendix 5

Overview and impressions of existing methods to estimate downdrag-induced bending moments

Reference	Type of study	Description of Piles	Description of Foundation soil	Description of embankment / foundation loading	Results
Shibata et al. (1982)	Laboratory model	A 3x2 group of piles composed of steel pipe having an outer diameter of 6.0cm, wall thickness of 1.2mm, and a length of 60cm were installed in the apparatus at a batter angle of 15 degree from vertical. Vertical sections were welded on the tops of the battered portion of the piles. Three series of tests were performed, one of which used a bitumen coating on the piles. Test series were also performed on single vertical piles and vertical pile groups.	A slurry of kaolin was poured around the pile group. The kaolin had a LL = 52, a PL = 39, a clay fraction of 39%, and a specific gravity of 2.61. A 10cm thick sand drainage layer was provided at the base of the sample tank. The kaolin slurry was allowed to consolidate under its own weight prior to application of a surcharge pressure.	A vinyl plastic sheet placed over the top of the clay slurry and pile tops was used to create a seal that allowed a surcharge pressure to be applied using air pressure. Tests were performed at surcharge pressures of 20, 40, and 60 kPa.	Results for the battered pile groups include plots of downdrag pressure versus time for the various surcharge pressures used. Also plots of bending moment versus depth along the pile are provided in Figure 14 of the paper. Plots of bending moment at various positions along the pile versus consolidation pressure are provided in Figure 15 of the paper.
Takahashi (1985)	Laboratory model	Piles consisted of rectangular plates measuring 1780mm long, 75mm wide, and 9mm thick. Four pairs of pile were installed with	A remolded fully saturated clay sample was formed in the apparatus prior to pile installation. The clay had a LL=89.8, a PL=35.2, and a specific gravity of 2.72.	The clay was subjected to a consolidation pressure of 10kN/m^2 using 220mm of steel shot placed over an upper drainage layer of sand.	Results include six plots of max bending moment for all batter angles, the distribution of

Reference	Type of study	Description of Piles	Description of Foundation soil	Description of embankment / foundation loading	Results
		hinged tops at batter angles of 5, 10, 15, and 20 degrees from vertical. Piles are pinned at the base of the clay using hinges.	Figure 6 in the paper shows a profile of the saturated unit weight and unconfined compressive strength measured after the test. Coefficient of compressibility, m_v, is stated as 15m^2/MN		bending moment for two pile inclinations, and a plot of maximum bending moment versus ground settlement magnitude.
Takahashi (1985)	Numerical model (3D) represents the laboratory tests	Piles treated as 3D elastic beam elements, likely with steel properties. Batter angles of 10 and 20 degrees were considered. Springs, presumably linear, are considered between the pile and the surrounding soil.	Clay is modeled as an elastic material with a Young's modulus of 44kN/m^2 and a Poisson's ratio of 0.33.	Steel and upper sand layer applied as pressures in the model. No additional details are provided about loading.	Figure 15 of the paper shows the predicted distribution of bending moment for a batter angle of 20 degrees.
Takahashi (1985), Sato et. al (1987), and Sawaguchi (1989)	Field study	A 2x2 group of steel pile piles (ϕ508xt9xl38700mm) were installed through the test embankment at a batter angle of 15 degrees. The arrangement of the pile is not provided. Two of the piles were coated with	The foundation soil consisted of a 30m deposit of clayey soil containing shell fragments. Piles were terminated in a stiff clay containing gravel and having an N value of 20. A profile of moisture content, total unit weight, and unconfined compressive	A 2.5m high embankment with plan dimensions of 40m x 25m. Consolidation of the clay soil was monitored for one year	Figures 20 through 24 in Takahashi (1985) detail ground settlements and the distribution of axial force, bending moment, and elastic compression

Reference	Type of study	Description of Piles	Description of Foundation soil	Description of embankment / foundation loading	Results
		bitumen. The tops of the piles were hinged and extended above the ground surface. Pile settlements are provided in Table 2 in the paper.	strength is provided in Figure 19 of the paper by Takahashi (1985).		observed in the piles.
Rao et al. (1994)	Laboratory model	The model consisted of a square grouping of piles set at a batter angle of 10 degrees and fixed at the top using steel plate. The piles were made from aluminum tubing having a diameter of 38.1mm, a thickness of 1.5mm, and measuring 725mm in length.	The piles were installed in an empty tank and 570mm of saturated clay was placed and tamped around the pile group. The clay had a LL=53, a PL=19, G_s=2.66, w=49%, unit weight of 17.2kN/m^3, and a vane shear strength of 60kN/m^2. Sand drainage layers 50 and 100mm thick were placed above and below the clay layer, respectively.	Loading of the clay was performed by placing weights on top of a steel plate at the top of the sand surface. It is not clear in the paper whether this is the same plate the piles are tied to. Two surcharge pressures were used in the study.	The results include plots of settlement versus time and distribution of bending moment for the two surcharge loads.
Veeresh (1996) as reported in Rajashree and Sitharam (2001)	Laboratory model	Isolated steel piles with a diameter of 19mm, a wall thickness of 2.1mm, and a length of 620mm were installed in soft clay. The top of the piles were left free. The following batter angles were considered: 0, +10, +30, -10, and -30	The soft clay used in the model was stated to have a liquid limit of 82% and a plastic limit of 2% which falls outside the limits of known soils. The clay was also has a water content of 50%, a unit weight of 17.2 kN/m^3, an undrained	Lateral loads were applied to the free ends of the piles at the ground surface elevation in 24N increments up to 120N. A cyclic load analysis was also included in this study.	The paper includes plots of lateral deflection against applied load and against depth at a load of 120N. Plots of the distribution of bending moment are also

Reference	Type of study	Description of Piles	Description of Foundation soil	Description of embankment / foundation loading	Results
		degrees.	strength of 7.5kPa, and a modulus of 415 kPa.		provided.
Navin (2009) *Baseline T-Wall model for St. Bernard Parish*	Numerical model	A 2D FLAC model considers three battered H-piles (two on protected side) and a sheet pile. Battered piles are HP14x89 and the sheet pile is PZ-22. The tip elevation for the H-piles is El -130 and EL -45 for the sheet pile. The spacing between H-piles perpendicular to the centerline of the wall is 6 ft. The batter angle of the H-piles is 3V:1H. The tops of the piles are pinned and are embedded 0.75ft into the T-Wall concrete to provide some moment capacity. 3D soil-pile interaction is represented using spring-slider elements between the piles and the soil in both normal and shear directions.	Soil properties for drained and undrained stages of the analysis are given in Tables 1 through 4 of the reference document.	The existing foundation soils are brought into equilibrium with gravity under drained conditions. The water table is established and the model is analyzed again. The piling is installed and the model is analyzed again. The embankment is placed (H=20 ft max, El +20) and the model is analyzed again. Soil properties are changed to reflect undrained conditions and the model is analyzed at increments of flooding ranging from 1.5 to 9 ft.	Profiles of shear load, axial load, moment, lateral displacement, and strain along the batter piles are provided.

Reference	Type of study	Description of Piles	Description of Foundation soil	Description of embankment / foundation loading	Results
Navin (2009) *T-Wall model to assess settlement*	Numerical model	The model considers one batter pile on the protected side and one on the flood side with a sheet pile separating the two. Battered piles are HP14x89 and the sheet pile is PZ-22. The spacing between H-piles perpendicular to the centerline of the wall is not provided in the reference document. The batter angle of the H-piles was scaled from Figure 3 in the report to be 1H:3V.	The same soil properties used in the baseline analysis for St. Bernard Parish are presumably used in this analysis.	The loading conditions modeled in the baseline analysis for St. Bernard Parish was followed up to the point of flood load, where instead of incremental flood loads, a vertical line load of 13.3 kpf was applied to the wall under drained conditions	Horizontal profiles of vertical changes in stress are provided at various elevations over the length of the piles.

Digitized Bending Moment Distributions

Shibata et al. (1982)

Surcharge Pressure = 20kPa

Bitumen-coated piles (RED)		Uncoated piles (1) (GREEN)		Uncoated piles (2) (BLUE)	
Y	X	Y	X	Y	X
Axial Length	Bending Moment	Axial Length	Bending Moment	Axial Length	Bending Moment
m	N-m	m	N-m	m	N-m
3	10	2.6	11.8	3	15.1
8.6	12.6	9	19.8	9	21
15	18	15	27	15	20
24	17	24.4	24	24.4	22.5
36	13	35.8	18.7	36	21.5
47.6	10	47.8	8.4	48	14.5
60	0	60	0	60	0

Surcharge Pressure = 40kPa

Bitumen-coated piles (RED)		Uncoated piles (1) (GREEN)		Uncoated piles (2) (BLUE)	
Y	X	Y	X	Y	X
Axial Length	Bending Moment	Axial Length	Bending Moment	Axial Length	Bending Moment
m	N-m	m	N-m	m	N-m
3.3	17	3.3	25	3	27.2
9.3	25.4	9.3	40.7	9.3	39.7
15.6	38	15.6	51.7	15.1	41.8
24.6	35	24.7	48.8	24.4	43.4
36.6	24.5	36.5	33.2	36.4	37.5
48.2	17.5	48.2	18.6	48	24.5
60	0	60	0	60	0

Surcharge Pressure= 60kPa

Bitumen-coated piles (RED)		Uncoated piles (1) (GREEN)	
Y	X	Y	X
Axial Length	Bending Moment	Axial Length	Bending Moment
m	N-m	m	N-m
4.8	24.5	4.8	37.4
8.5	38.5	8.5	61.2
14.5	56	15	76.8
24	54	24	73.2
35.5	36.4	36.2	50.8
47	26	48	33
60	0	60	0

Plots of Moment Distribution

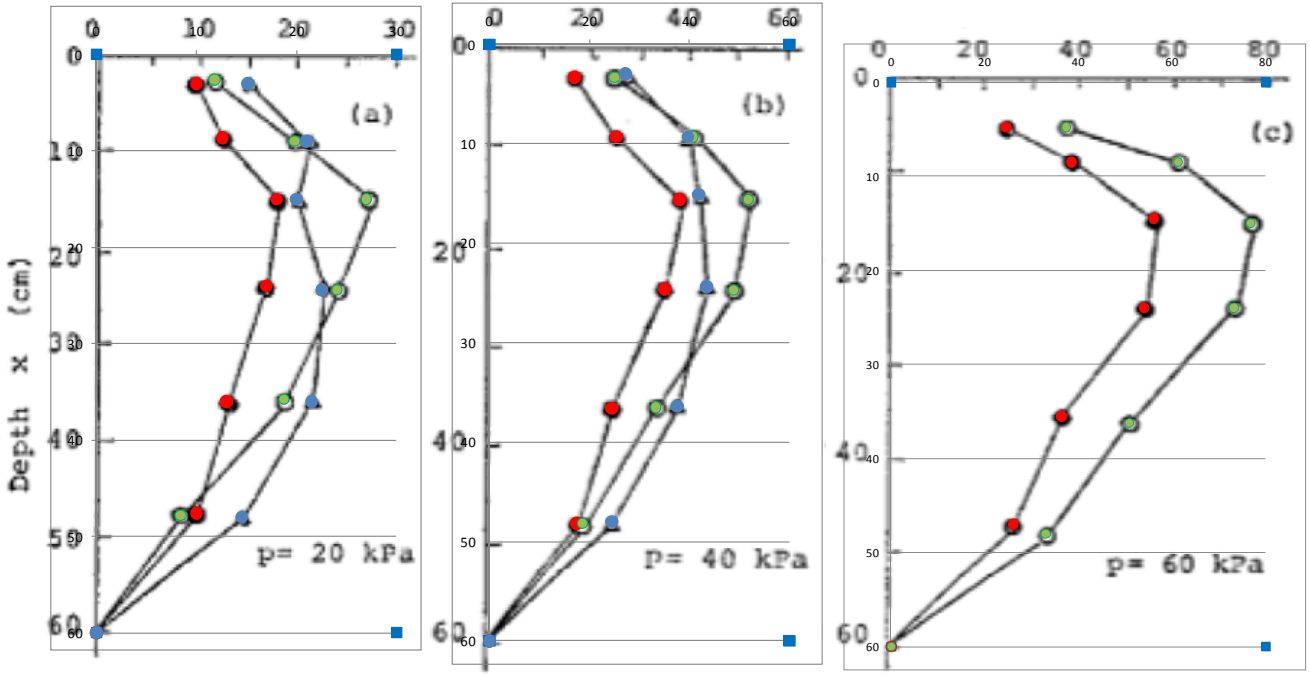

Takahashi (1985)

Experimental bending moment distributions after 1, 4, and 14 weeks of consolidation for batter angle of 20 degrees

1 Week		4 Weeks		14 Weeks	
Y	X	Y	X	Y	X
Axial Length	Bending Moment	Axial Length	Bending Moment	Axial Length	Bending Moment
cm	N-m	cm	N-m	cm	N-m
10	22	10	41	10	54
20	31	20	58	20	78
30	40	30	76	30	100
40	49	40	94	40	127
50	47.5	50	106	50	153
60	40	60	105	60	170
70	32	70	89	70	161
80	24	80	72	80	138
90	18	90	58	90	113
100	12	100	45	100	87
110	9	110	32	110	60
120	7.5	120	23.5	120	36
130	7.5	130	16	130	16
140	7.5	140	5	140	-3
150	3	150	-3	150	-20
160	0	160	-10	160	-24
170	-1	170	-9	170	-16

Plots of moment distribution

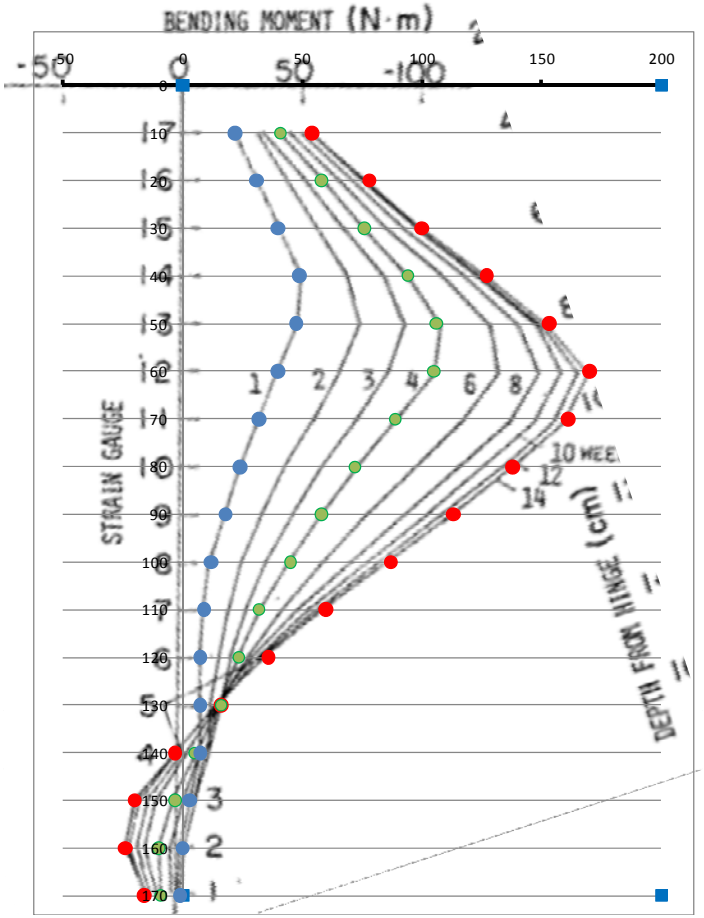

Experimental bending moment distributions after 14 weeks of consolidation for batter angle of 10 degrees

14 Weeks	
Y	X
Axial Length	Bending Moment
cm	N-m
20	19
30	30
40	41
50	51
60	62
70	73
80	85
90	90
100	87
110	75
120	65
130	47
140	30
150	15
160	0
170	-7

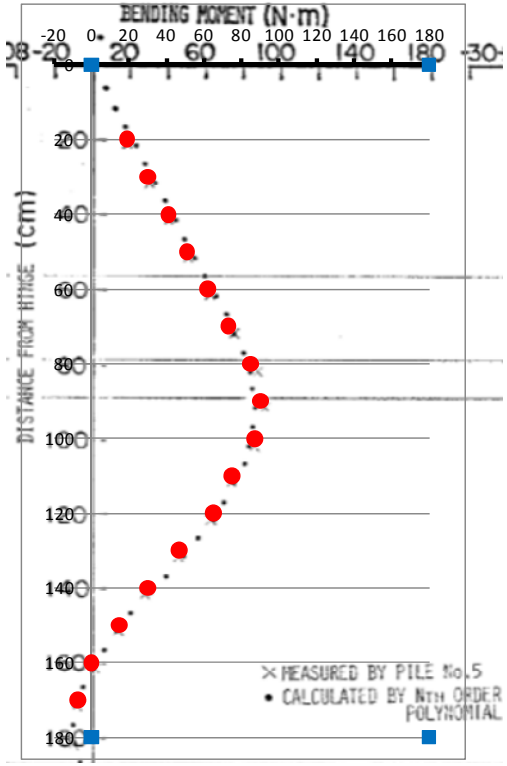

Field-scale study bending moment distributions after 55, 119,264, and 364 days of consolidation for batter angle of 15 degrees

55-days

Y	X
Axial Length	Bending Moment
m	kN-m
0	-55
3	-125
6	-68
10	-8
14	22
18	12
22	-35
26	3
30	-52
34	-8

119-days

Y	X
Axial Length	Bending Moment
m	kN-m
0	-40
3	-153
6	-110
14	30
18	25
22	-32
26	50
30	-27
34	-34

243-days

Y	X
Axial Length	Bending Moment
m	kN-m
0	-78
3	-232
6	-157
14	40
18	35
22	0
26	-5
30	0
34	-19

364-days

Y	X
Axial Length	Bending Moment
m	kN-m
0	-94
3	-292
6	-198
14	54
18	45
22	27
26	-56
30	0
34	-19

Plots of moment distribution

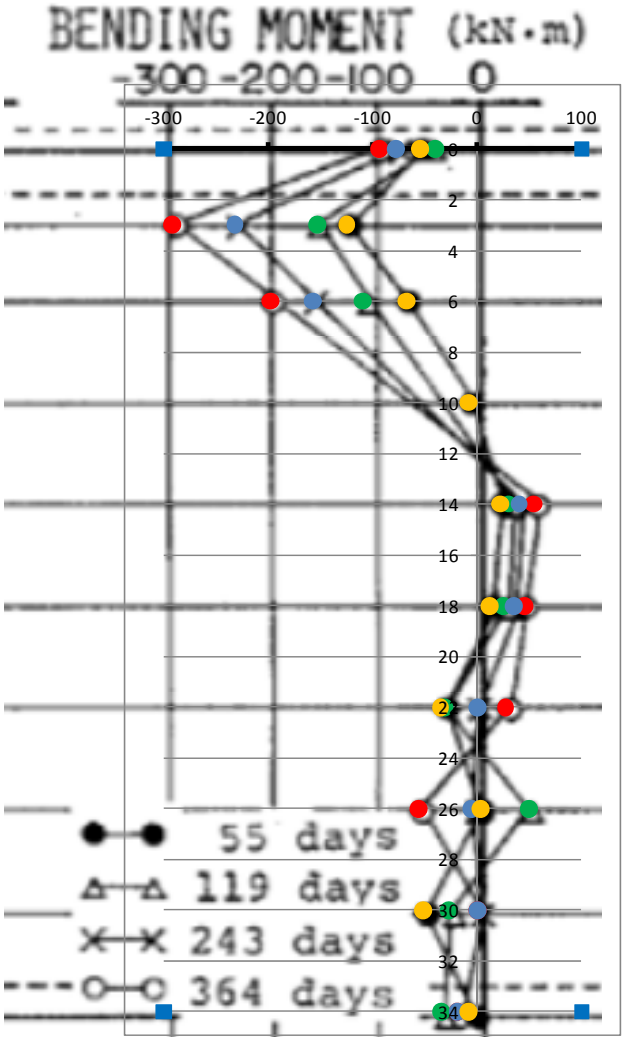

Sawaguchi (1989)

Field-scale bending moment distributions after one year of consolidation for batter angle of 15 degrees

Pile C		Pile D	
Y	X	Y	X
Axial Length	Bending Moment	Axial Length	Bending Moment
m	tf-m	m	tf-m
0.8	-13.5	0.8	-9.5
3.8	-31.5	3.8	-29.3
6.75	-16.65	6.75	-16.1
10.6	1	10.6	1
14.5	0.5	14.5	5.6
18.2	0.2	18.2	4.3
22	0	22	2.8
26	0.4	26	-4.6
30	0.3	30	-0.1
33.65	0.6	33.65	-1.5

Plots of moment distribution

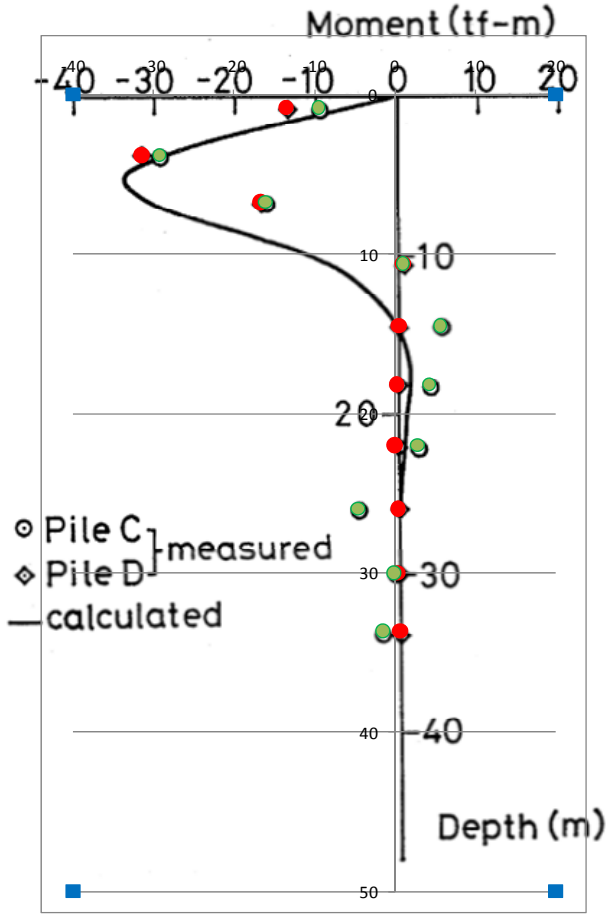

Rao et al. (1994)

Field-scale bending moment distributions after 400 hours of consolidation for batter angle of 10 degrees

Y	X
Axial Length	Bending Moment
m	N-m
0	-6.6
0.115	0.2
0.208	3.3
0.32	5.8
0.415	6.2
0.523	5.4
0.618	2.8
0.732	-2.9

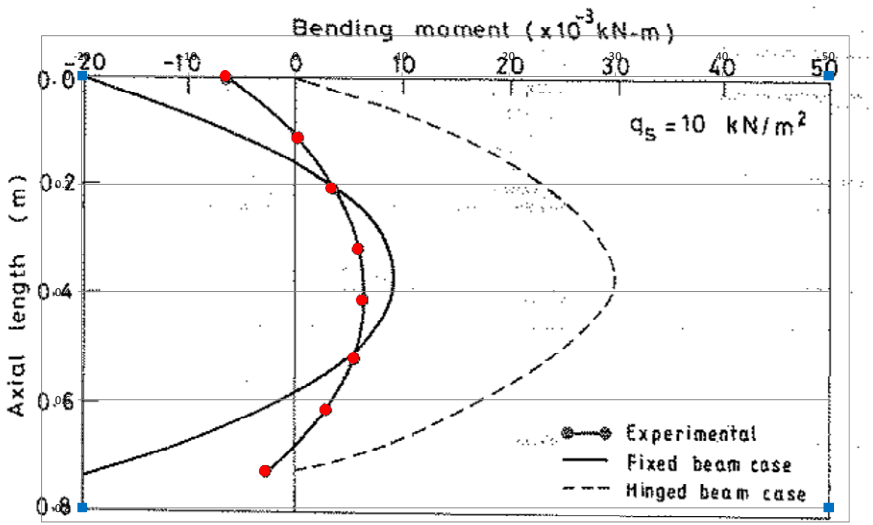

Navin (2009)

Moment distributions calculated using FLAC for T-Wall Foundation Elements in St. Bernard Parish

These plots are taken directly from the document "Overview of FLAC analysis for St. Bernard Parish." The plots representing the "Drained" condition apply to the analysis which considered drained conditions during stress initialization, pile installation, and fill placement and undrained conditions during the short-term flood loading. The plots representing the "Undrained" condition apply to the analysis which considered undrained soil properties for all phases.

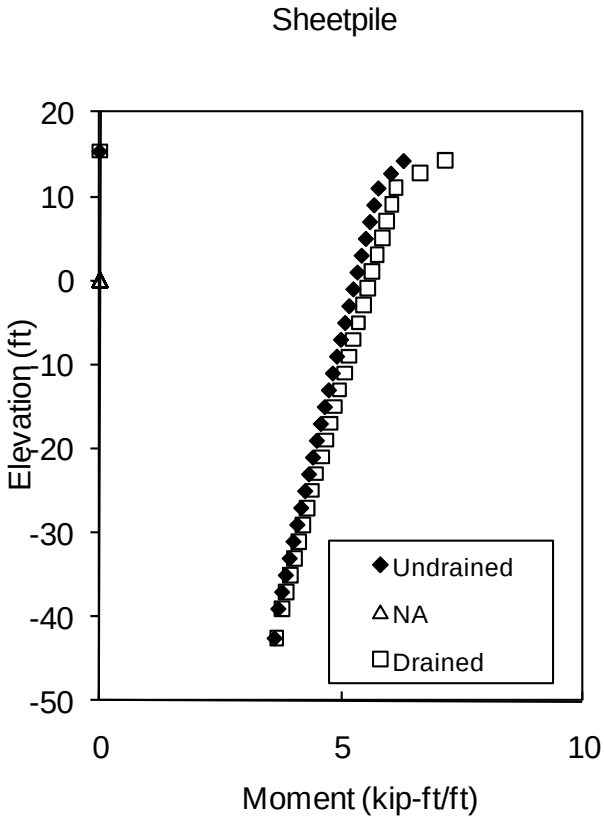

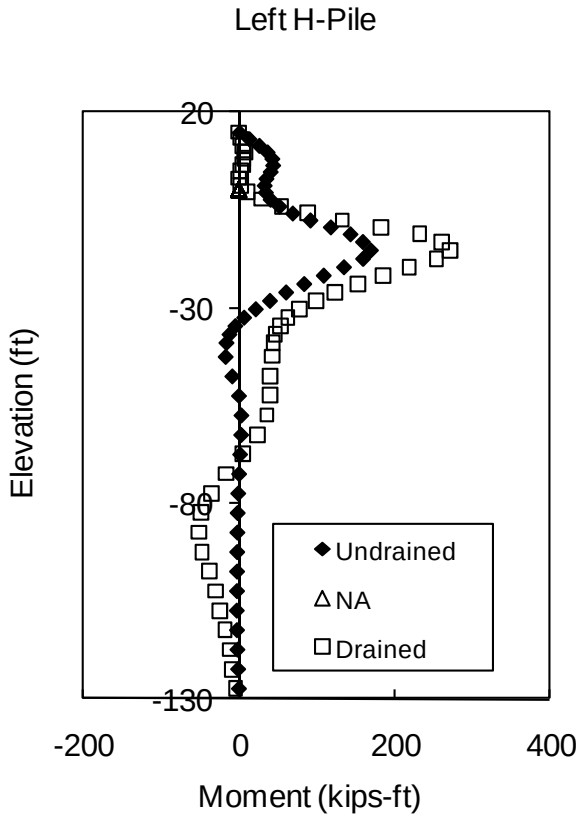

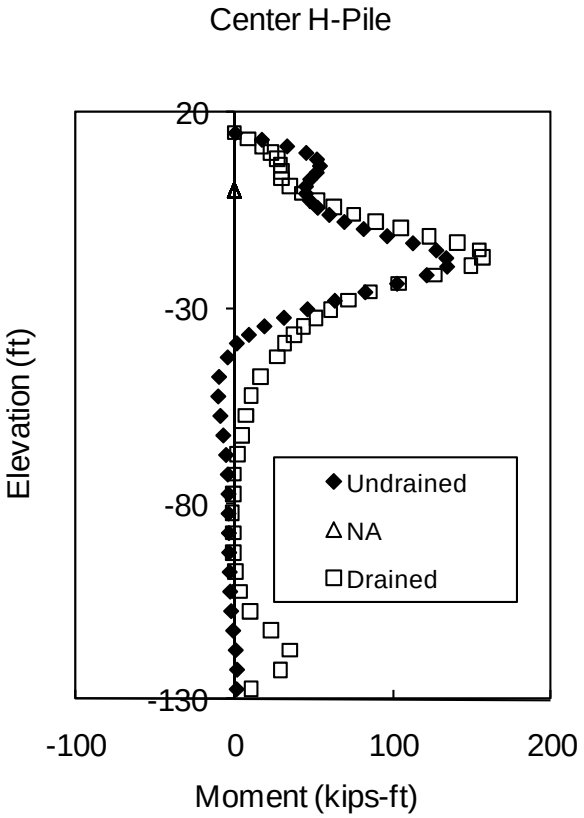
Center H-Pile
20
-30
-80
-130
Elevation (ft)
-100
0
100
200
Moment (kips-ft)
Undrained
NA
Drained

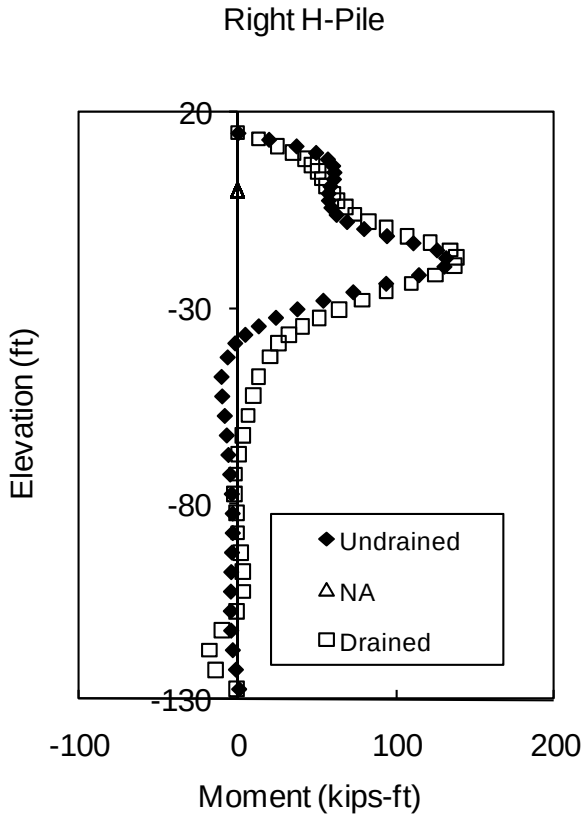
Right H-Pile
20
-30
-80
-130
Elevation (ft)
-100
0
100
200
Moment (kips-ft)
Undrained
NA
Drained

Appendix E

Comparison of the method by Shibata et al. (1982) to the experimental studies

Evaluation of the method by Shibata et al. (1982) to predict bending moment

Key findings:

- With calibration, this method yields good agreement with the measured value of peak bending moment using a simple closed-form expression.
- The method loses predictive accuracy if the pile passes through an embankment layer or extends above the ground surface.
- The model is very sensitive to the assigned value of coefficient of subgrade reaction. Shibata et al. use the correlation by Broms and Fredriksson (1976) which relates subgrade reaction at long-term loading to undrained shear strength and pile diameter. There are limitations to using this correlation for the general case, these include 1) it was originally intended for concrete piles and 2) the constant in the equation is often taken to be 10, however, Broms and Fredriksson report that values ranging from 7 to 27. In order to achieve good agreement with the measured results, constants ranging from 0.7 to 90 were applied to the clay foundation soils. The New Orleans district has found that a coefficient of 64 works well for many native clay soils.
- When the pile length is less than about 20 times the pile width, both measured and predicted bending moment distributions do not have an inflection point. Despite some discrepancies between the observed and predicted bending moment distributions, the values of peak bending moment are quite similar.
- When the pile length is greater than about 20 times the pile width, both measured and predicted bending moment distributions include an inflection point. For piles which do not pass through an embankment layer or extend above the ground surface, the method by Shibata et al. does a good job at predicting the distribution of bending moment. The peak predicted and measured value of bending moment occurs within 8 pile diameters for piles which do not extend through an embankment layer or above the ground surface.

Plots of bending moment distributions:

General notes:

- The bending moment distributions predicted by Shibata et al. (1982) were developed using a value of coefficient of subgrade reaction estimated using the relationship proposed by Broms and Fredriksson (1976). This relationship is provided in Equation 1, where S_u is the average undrained strength over the clay layer, D is the pile width or diameter, and N is a proportionality constant. Broms and Fredriksson observed values of N ranging from 7 to 27 for concrete piles. The practical recommendation used by the New Orleans District is 64 for many native soils. The value of N used to develop each plot is given in the accompanying table of input parameters. A single value of N was assigned to each soil type.

$$k_h = N\frac{S_u}{D} \qquad 1$$

Laboratory model by Shibata et al. (1982)

Surcharge pressure = 20kPa

p_o	*5.5*	cm
Batter angle	*0.262*	rad
l	*60*	cm
S_u avg	*6*	kPa
D	*6*	cm
E	*2.10E+08*	kpa
I	*9.6*	cm^4
EI	*20.16*	
N	*10*	
k	*1000.00*	- N Cu/D (kN/m^3)
Beta	0.009	- (kD/4EI)^1/4
Beta *l	0.56	

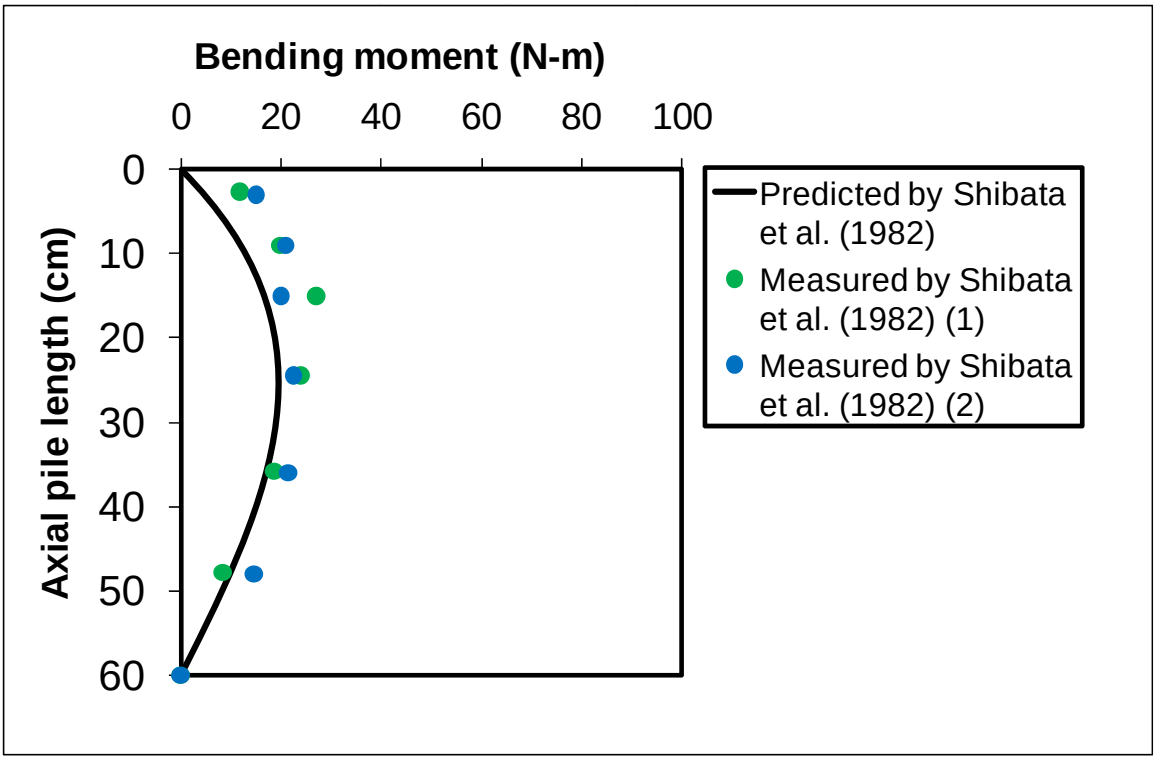

Surcharge pressure = 40kPa

p_o	*6.65*	cm
Batter angle	*0.262*	rad
l	*60*	cm
S_u avg	*12*	kPa
D	*6*	cm
E	*2.10E+08*	kpa
I	*9.6*	cm^4
EI	*20.16*	
N	*10*	
k	*2000.00*	- 10 Cu/D (kN/m^3)
Beta	0.011	- (kD/4EI)^1/4
Beta *l	0.66	

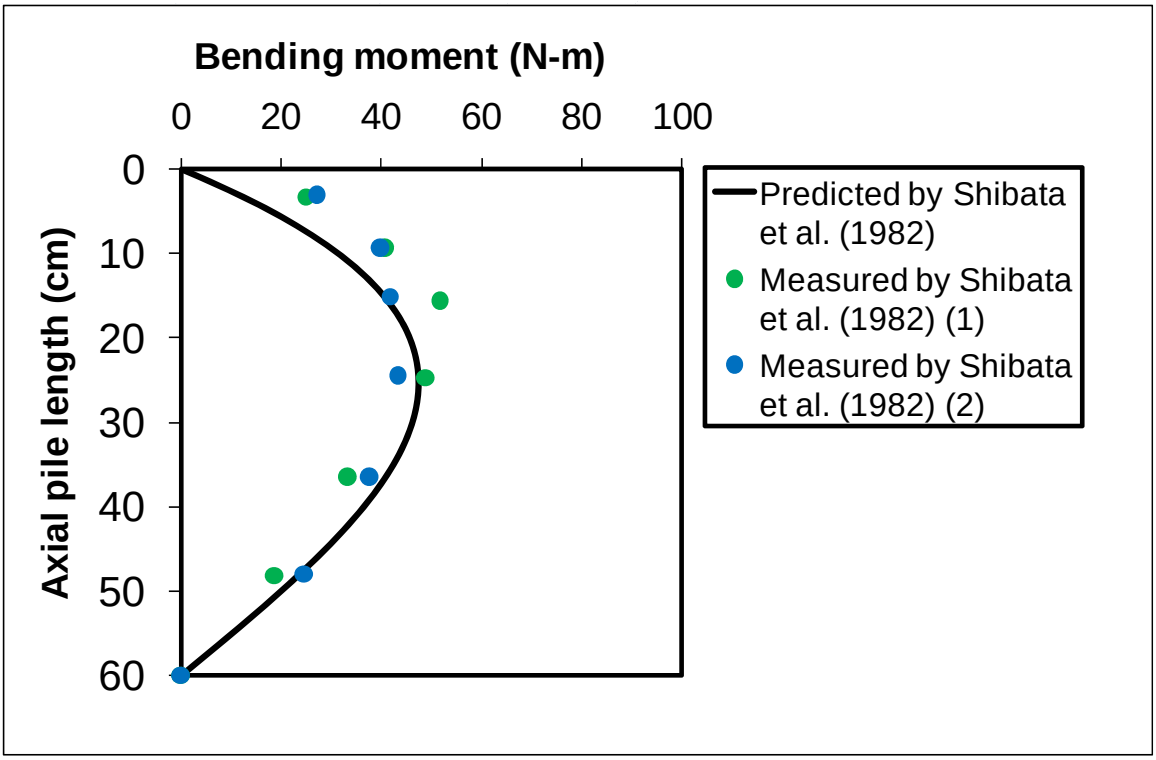

Surcharge pressure = 60kPa

p_o	*7.04*	cm
Batter angle	*0.262*	rad
l	*60*	cm
S_u avg	*18*	kPa
D	*6*	cm
E	*2.10E+08*	kpa
I	*9.6*	cm^4
EI	*20.16*	
N	*10*	
k	*3000.00*	- 10 Cu/D (kN/m^3)
Beta	0.012	- (kD/4EI)^1/4
Beta *l	0.73	

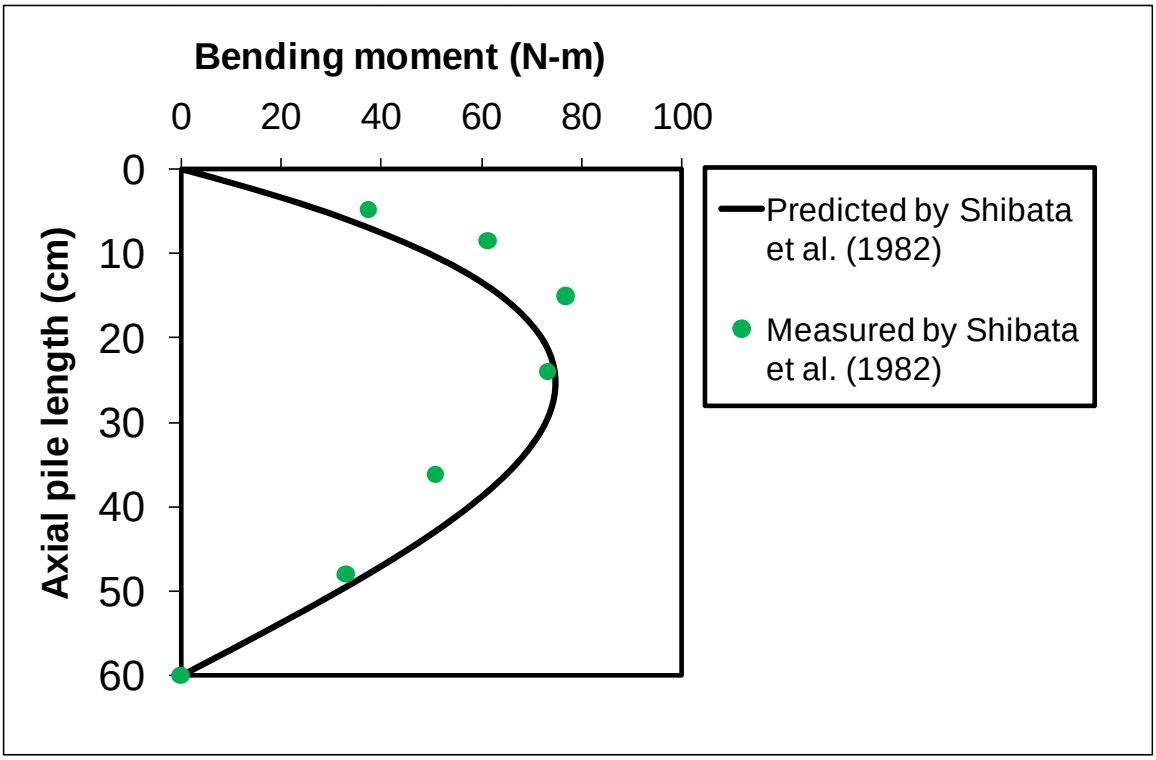

Laboratory model by Takahashi (1985)

In this model, the batter piles pass through an embankment layer and extend above the ground surface

Surface settlement after 1 week, batter angle of 20 deg

p_o	*0.046*	m
theta	*0.349*	rad
l	*1.78*	m
S_u avg	*5*	kPa
D	*0.075*	m
E	*2.00E+08*	kN/m2
I	*4.556E-09*	m^4
EI	*9.11E-01*	kN-m^2
N	*19*	
k	*1266.67*	- 10 Cu/D (kN/m^3)
Beta	2.260	- (kD/4EI)^1/4
Beta *l	4.02	

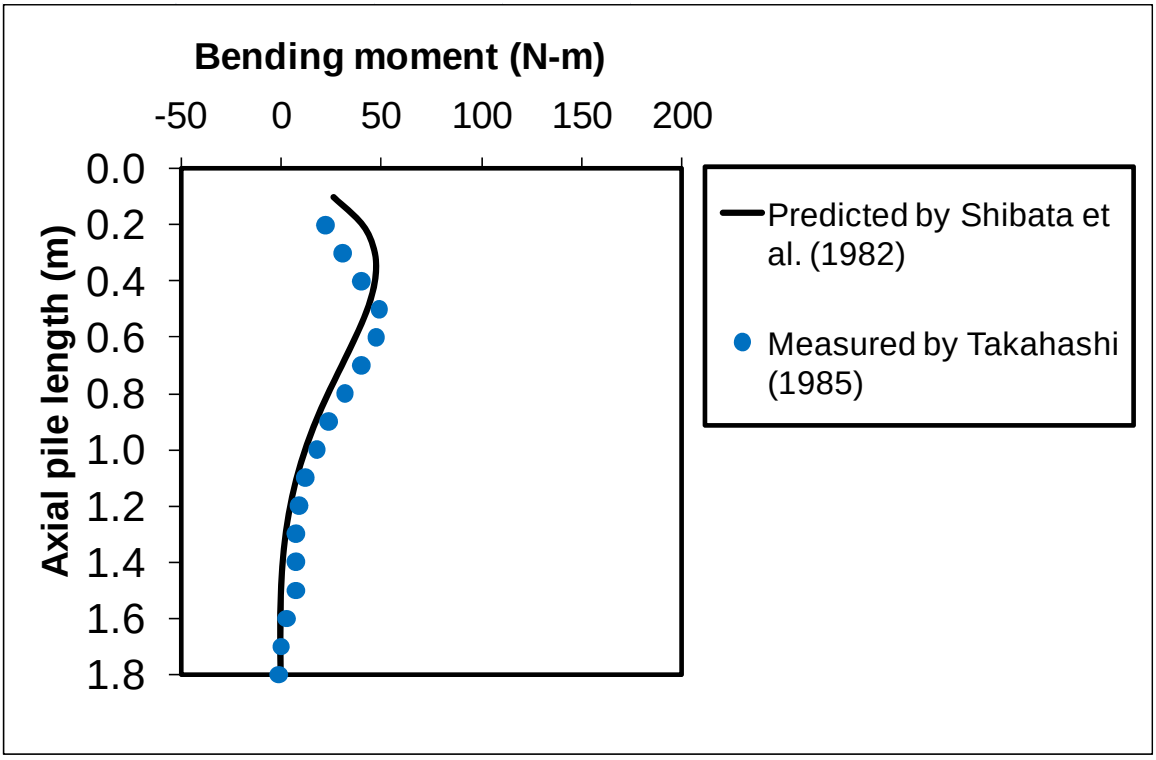

Surface settlement after 4 weeks, batter angle of 20 deg

p_o	*0.101*	m
theta	*0.349*	rad
l	*1.78*	m
S_u avg	*5*	kPa
D	*0.075*	m
E	*2.00E+08*	kN/m2
I	*4.556E-09*	m^4
EI	*9.11E-01*	kN-m^2
N	*19*	
k	*1266.67*	- 10 Cu/D (kN/m^3)
Beta	2.260	- (kD/4EI)^1/4
Beta *l	4.02	

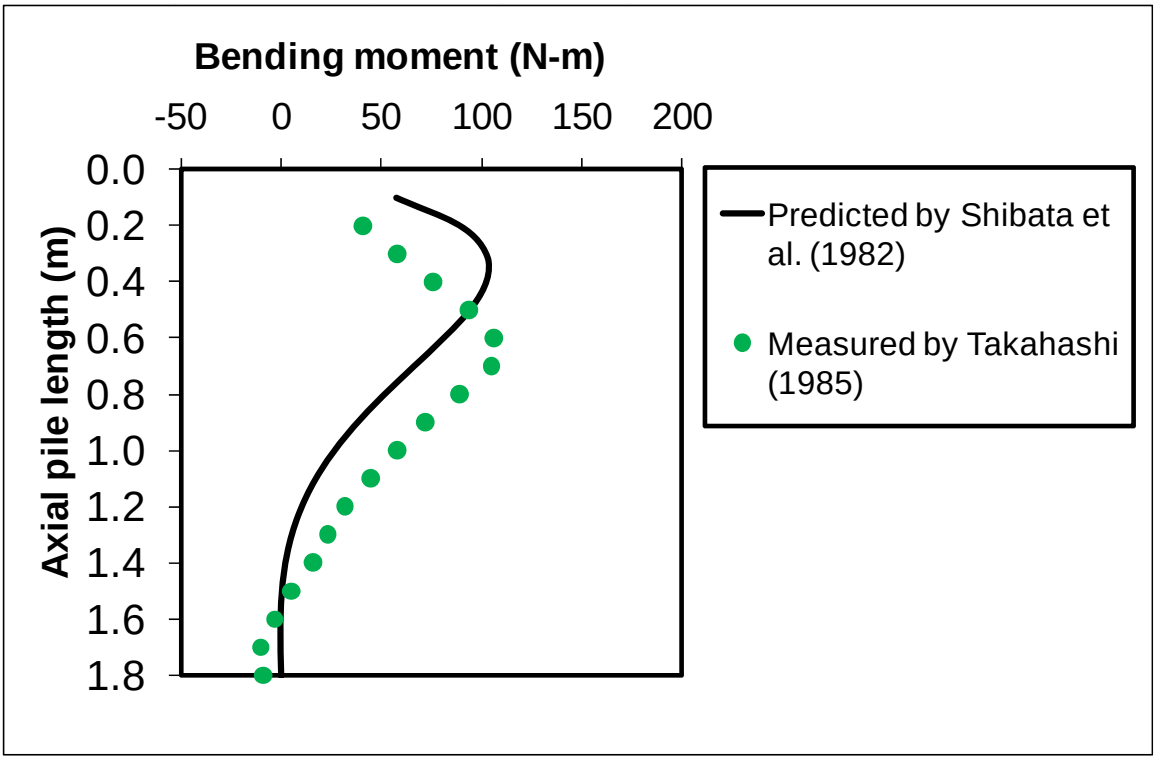

Surface settlement after 14 weeks, batter angle of 20 deg

p_o	*0.169*	m
theta	*0.349*	rad
l	*1.78*	m
S_u avg	*5*	kPa
D	*0.075*	m
E	*2.00E+08*	kN/m2
I	*4.556E-09*	m^4
EI	*9.11E-01*	kN-m^2
N	*19*	
k	*1266.67*	- 10 Cu/D (kN/m^3)
Beta	2.260	- (kD/4EI)^1/4
Beta *l	4.02	

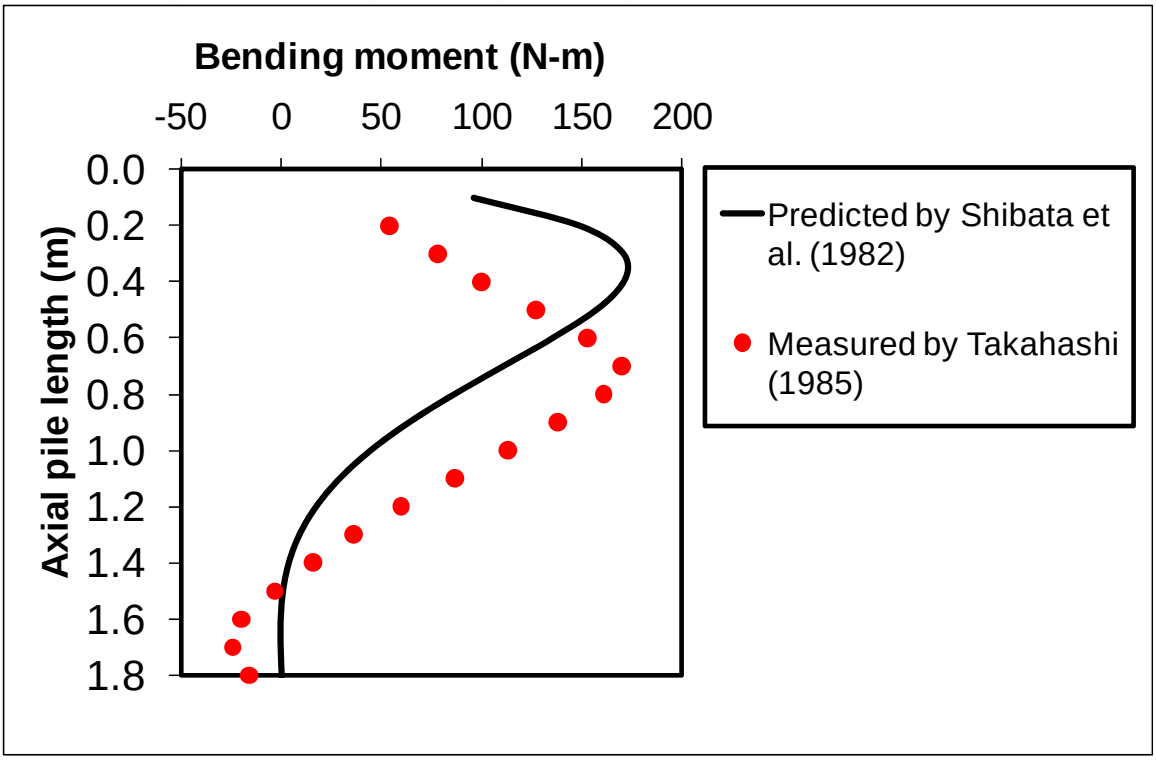

Surface settlement after 14 weeks, batter angle of 10 deg

p_o	*0.169*	m
theta	*0.175*	rad
l	*1.78*	m
S_u avg	*5*	kPa
D	*0.075*	m
E	*2.00E+08*	kN/m2
I	*4.556E-09*	m^4
EI	*9.11E-01*	kN-m^2
N	*19*	
k	*1266.67*	- 10 Cu/D (kN/m^3)
Beta	2.260	- (kD/4EI)^1/4
Beta *l	4.02	

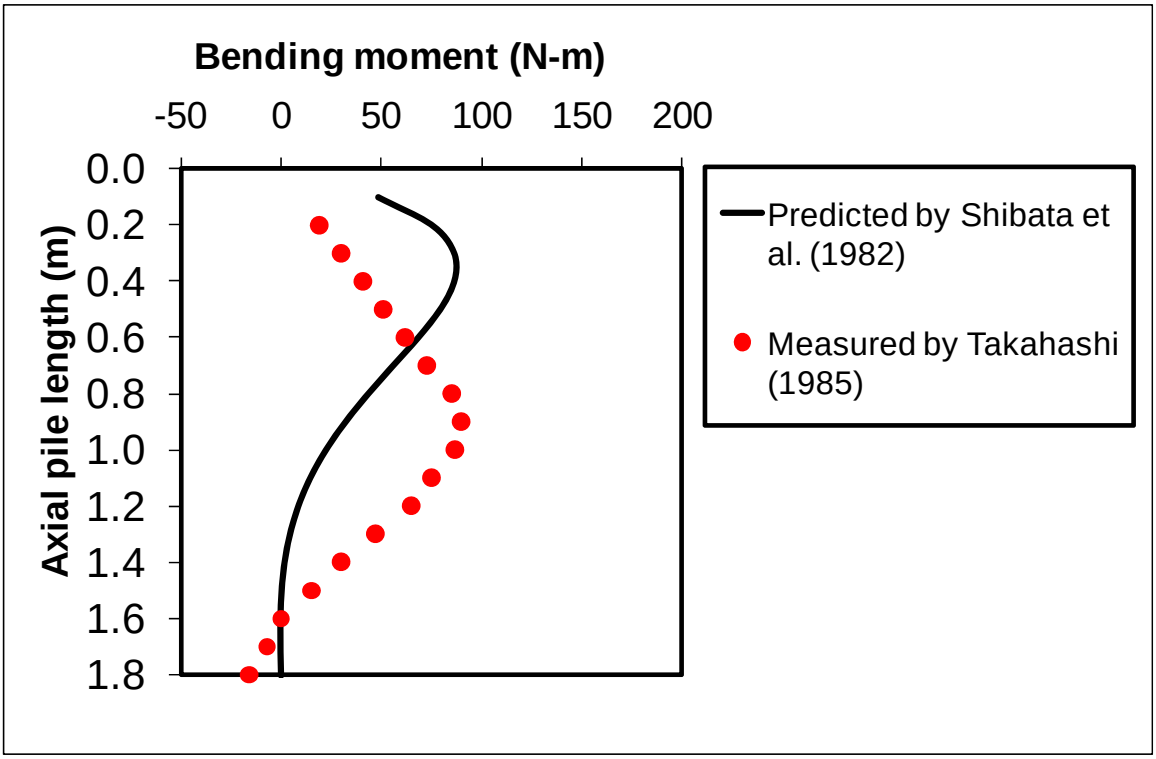

Field-scale study reported by Takahashi (1985)

In this model, the batter piles pass through an embankment layer.

Surface settlement after 55 days

p_o	*0.108*	m
theta	*0.262*	rad
l	*38.7*	m
S_u avg	*20*	kPa
D	*0.508*	m
E	*2.00E+08*	kN/m2
I	*0.00043927*	m^4
EI	*8.79E+04*	kN-m^2
N	*90*	
k	*3543.31*	- 10 Cu/D (kN/m^3)
Beta	0.268	- (kD/4EI)^1/4
Beta *l	10.35	

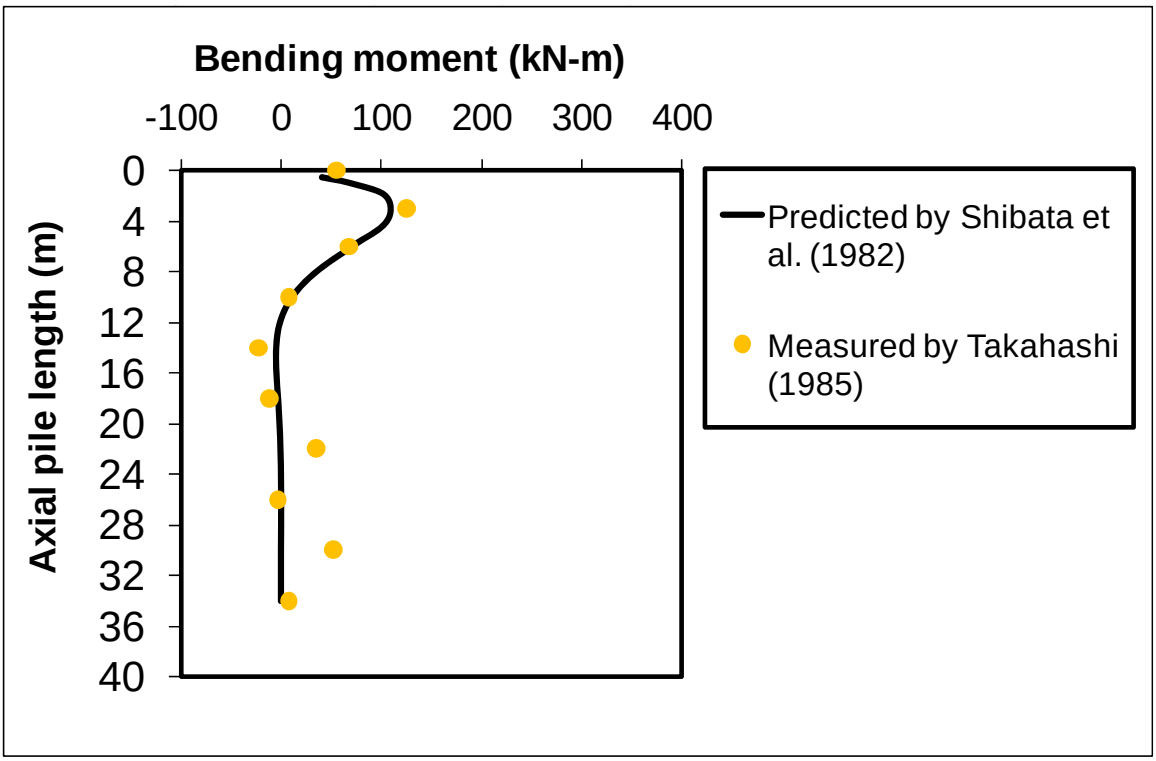

Surface settlement after 119 days

p_o	*0.163*	m
theta	*0.262*	rad
l	*38.7*	m
S_u avg	*20*	kPa
D	*0.508*	m
E	*2.00E+08*	kN/m2
I	*0.00043927*	m^4
EI	*8.79E+04*	kN-m^2
N	*90*	
k	*3543.31*	- 10 Cu/D (kN/m^3)
Beta	0.268	- (kD/4EI)^1/4
Beta *l	10.35	

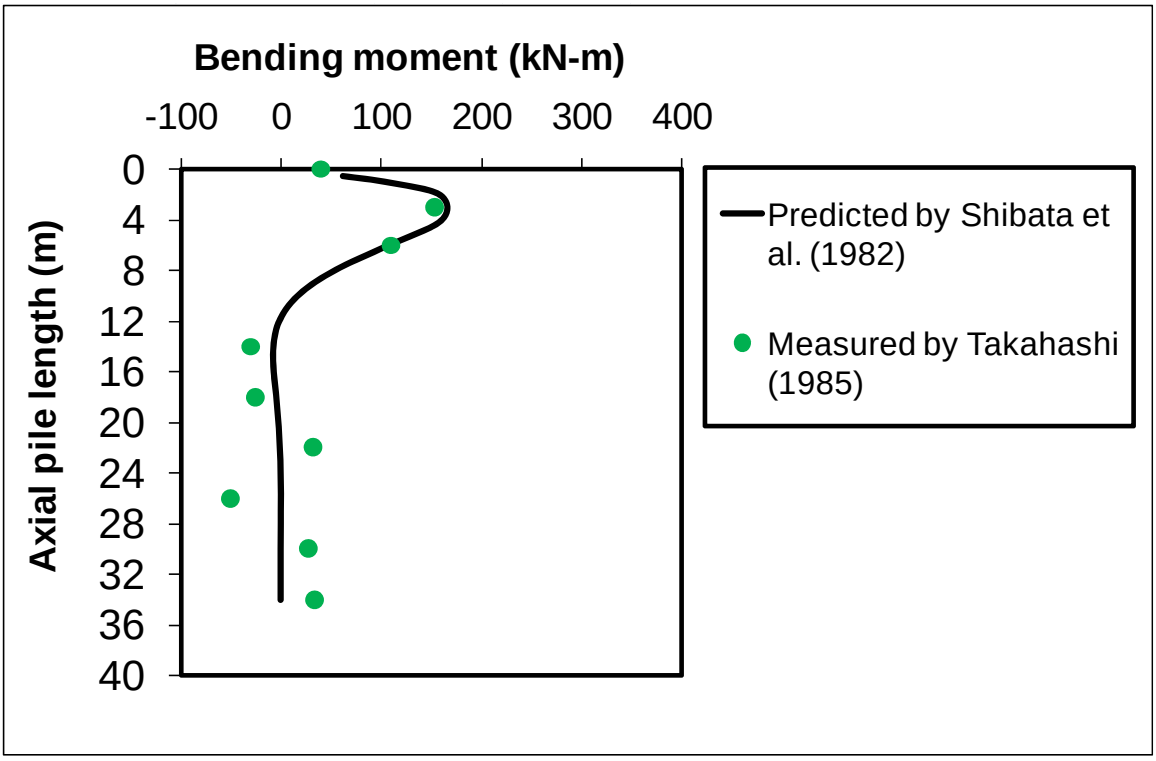

Surface settlement after 243 days

p_o	*0.23*	m
theta	*0.262*	rad
l	*38.7*	m
S_u avg	*22.5*	kPa
D	*0.508*	m
E	*2.00E+08*	kN/m2
I	*0.00043927*	m^4
EI	*8.79E+04*	kN-m^2
N	*90*	
k	*3986.22*	- 10 Cu/D (kN/m^3)
Beta	0.276	- (kD/4EI)^1/4
Beta *l	10.66	

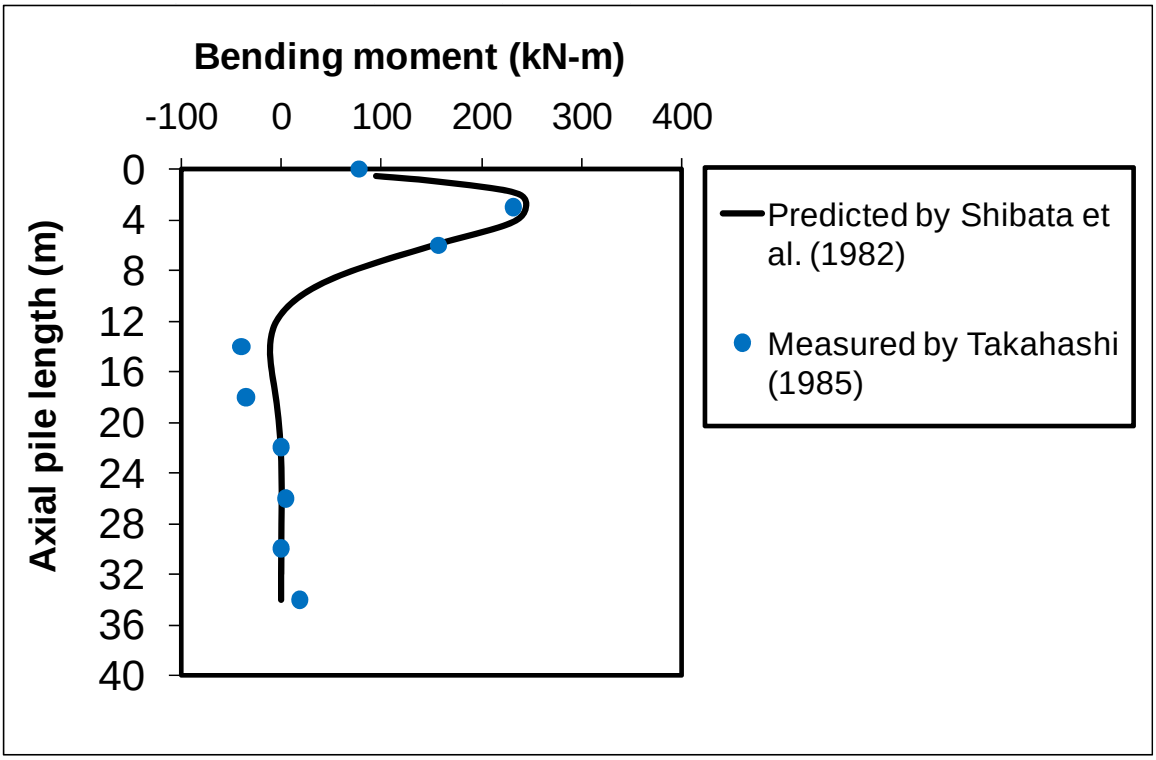

Surface settlement after 364 days

p_o	*0.263*	m
theta	*0.262*	rad
l	*38.7*	m
S_u avg	*25*	kPa
D	*0.508*	m
E	*2.00E+08*	kN/m2
I	*0.00043927*	m^4
EI	*8.79E+04*	kN-m^2
N	*90*	
k	*4429.13*	- 10 Cu/D (kN/m^3)
Beta	0.283	- (kD/4EI)^1/4
Beta *l	10.95	

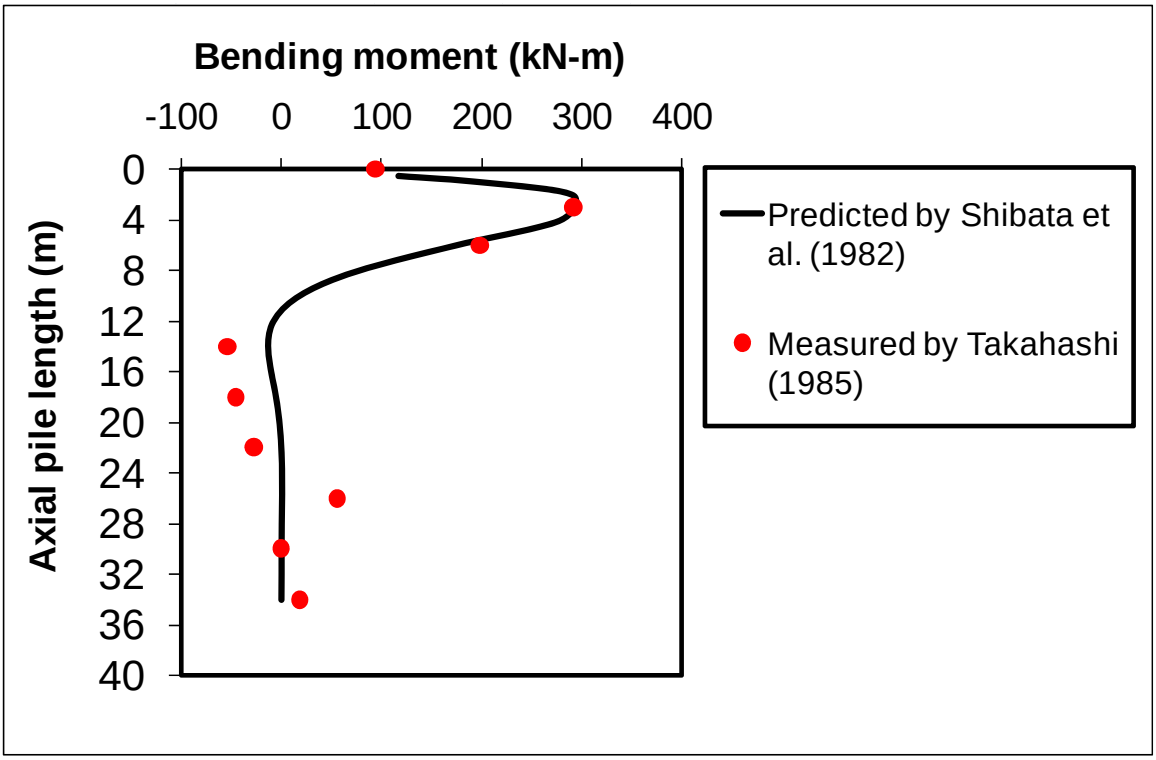

Field-scale study reported by Sawaguchi (1989)

p_o	*0.263*	m
theta	*0.262*	rad
l	*33.65*	m
C_u avg	*12*	kPa
D	*0.508*	m
EI	*179830*	kN-m^2
N	90	
k	*5880.00*	GIVEN (kN/m^3)
k	*2177.36*	- 10 Cu/D (kN/m^3)
Beta	0.254	- (kD/4EI)^1/4
Beta *l	8.54	

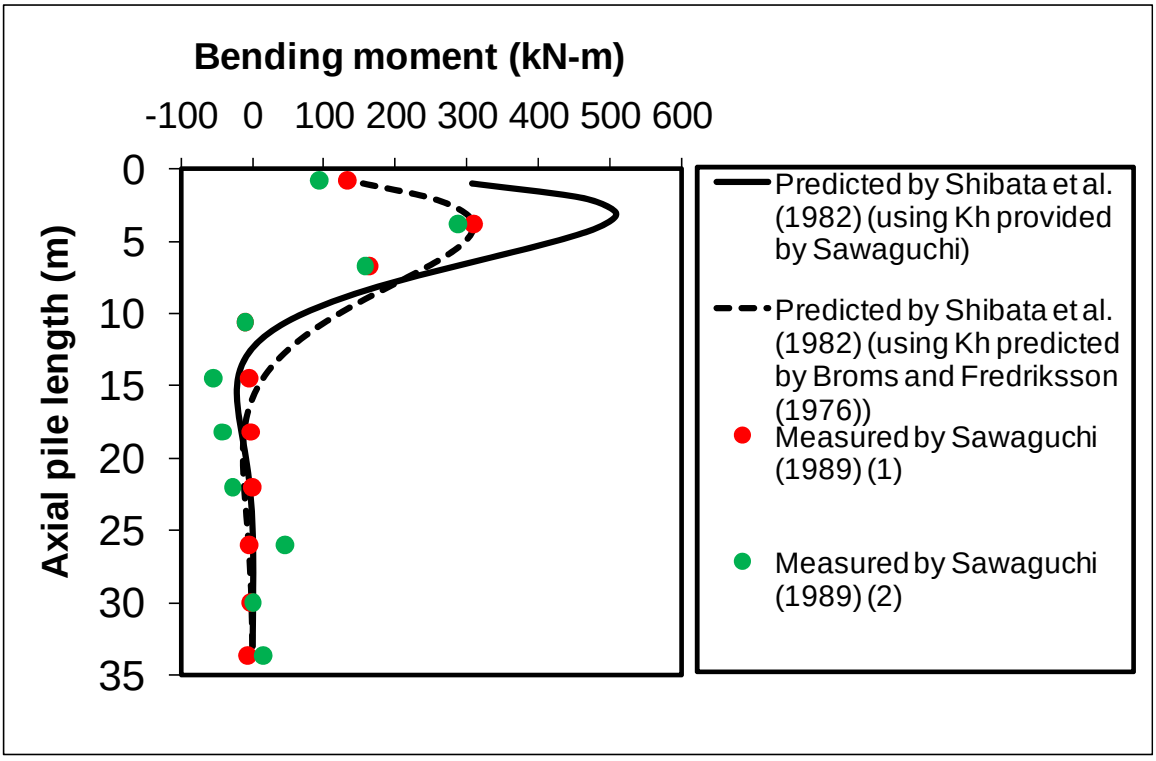

Laboratory model by Rao et al. (1994)

p_o	*0.0304*	m
theta	*0.175*	rad
l	*0.725*	m
S_u avg	*53*	kPa
D	*0.0381*	m
E	*7.00E+07*	kN/m2
I	*2.8928E-08*	m^4
EI	*2.02E+00*	kN-m^2
N	*0.7*	
k	*965.12*	- 10 Cu/D (kN/m^3)
Beta	1.460	- (kD/4EI)^1/4
Beta *l	1.06	

