US Army Corps
of Engineers.
New Orleans District

Mississippi River - Gulf Outlet

New Lock and Connecting Channels

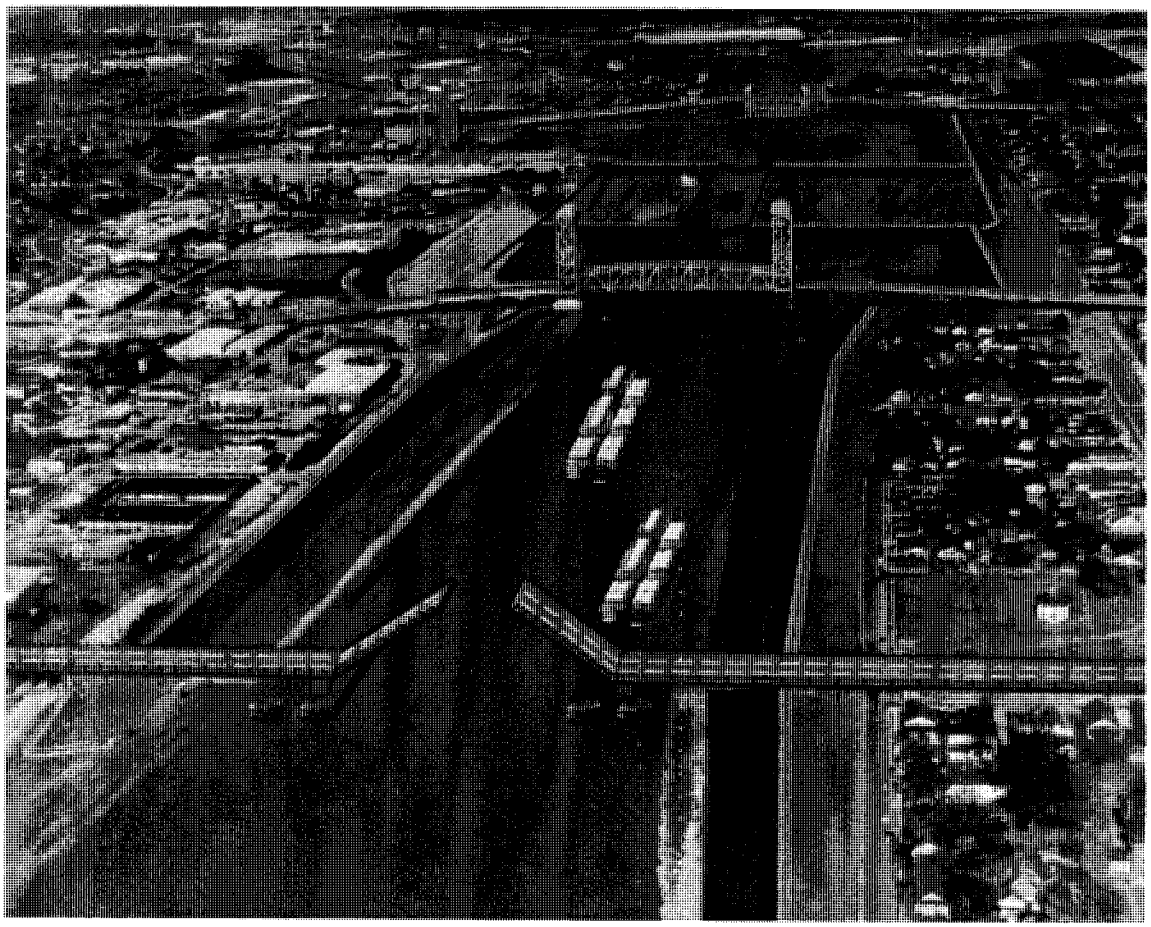

Evaluation Report

Design Plates for Engineering Investigations

Volume 4 of 9
Appendix B-1
March 1997

If you have any questions or require additional information, please contact one of the following:

Mr. Gerald J.Dicharry, Jr.(Joe)
Sr. Project Manager
USAED, New Orleans
P. O. Box 60267
New Orleans, LA 70160
(504) 862-1929

Mr. Leslie S. Waguespack (Les)
Study Manager
USAED, New Orleans
P. O. Box 60267
New Orleans, LA 70160
(504) 862-2503

MISSISSIPPI RIVER - GULF OUTLET
NEW LOCK AND CONNECTING CHANNELS

PLATES

No.	Title
B-1	Gage Locations
B-2	River Side Stage Duration (1945-1989)
B-3	Lake Side
B-4	Normal Differential Heads (1945-1989)
B-5	Normal Differential Heads Duration (1945-1989)
B-6	Reverse Differential Head Duration (1945-1989)
B-7	Valve Time vs. Filling Time 110 Ft x 900 Ft Lock
B-8	Valve Time vs. Emptying Time 110 Ft x 900 Ft Lock
B-9	Valve Time vs. Filling Time 110 Ft x 1200 Ft Lock
B-10	Valve Time vs. Emptying Time 110 Ft x 1200 Ft Lock
B-11	Valve Time vs. Lift 900 Ft & 1200 Ft Lock
B-11A	1993 Elutriate Sampling Locations
B-12	Vicinity and Site Maps - Lock, Channel & Graving Site
B-12A	General Plan Lock And Channel
B-12B	Graving Site and Excavation Plan
B-12C	Graving Site Cross Sections
B-13	Channel Excavation Plan Ship And Barge Lock
B-14N	Channel Excavation Plan 900' Concrete Barge Lock
B-14T	Channel Excavation Plan 1200' Concrete Ship Lock
B-15-N	Channel Excavation Plan 900' Concrete Barge Lock
B-15-T	Channel Excavation Plan 1200' Concrete Ship Lock
B-15A	Disposal Sites

No.	Title
B-16	Excavation Plan 1200' Concrete Ship Lock
B-17	Plan 1200' Concrete Ship Lock
B-18	Cross Sections 1200' Concrete Ship Lock
B-19	Plan And Wall Profiles 1200' Concrete Ship Lock
B-20	Sections & Details 1200' Concrete Ship Lock
B-21	Gatebay Reinforcement Details 1200' Concrete Ship Lock
B-22	Chamber Reinforcement Details 1200' Concrete Ship Lock
B-23	Joint Details 1200' Concrete Ship Lock
B-24A	Pile Foundation Plan 1200' Concrete Ship Lock
B-24B	Setting Pile Details 1200' Concrete Ship Lock
B-25	Grouting/Foundation Preparation 1200' Concrete Ship Lock
B-26	Excavation Plan 900' Concrete Barge Lock
B-27	Plan 900' Concrete Barge Lock
B-28	Cross Sections 900' Concrete Barge Lock
B-29	Plan And Wall Profiles 900' Concrete Barge Lock
B-30	Sections & Details 900' Concrete Barge Lock
B-31	Gatebay Reinforcement Details 900' Concrete Barge Lock
B-32	Chamber Reinforcement Details 900' Concrete Barge Lock
B-33	Joint Details 900' Concrete Barge Lock
B-34	Setting Pile Plan 900' Concrete Barge Lock
B-35	Grouting/Foundation Preparation 900' Concrete Barge Lock
B-36	Emergency Bulkhead Ship And Barge Lock
B-37	Bulkhead Sections Ship And Barge Lock
B-38	Miter Gate Plan Ship Lock
B-39	Miter Gate Elev. And Section Ship Lock

No.	Title
B-40-N	Lock Culvert Valve 900' Barge Lock
B-40-T	Lock Culvert Valve 1200' Ship Lock
B-41-N	Tainter Valve Lock Section 900' Ship Lock
B-41-T	Tainter Valve Lock Section 1200' Ship Lock
B-42	River Side Flood Protection Ship And Barge Lock
B-43	River Side Flood Protection Ship And Barge Lock
B-44	Lock Guidewalls 1200' Ship Lock
B-45	Lock Guidewalls 900' Barge Lock
B-46	Lock Guidewalls - Details Ship And Barge Lock
B-47-N	Lock Intake/Outlet Ports 900' Lock Chamber
B-47-T	Lock Intake/Outlet Ports 1200' Lock Chamber
B-48-A	Permanent Mooring Details North End New Lock to Florida Avenue
B-48-N	Permanent Mooring Details St. Claude Ave. to Claiborne Ave.
B-48-T	Permanent Mooring Details St. Claude Ave. to Claiborne Ave.
B-49	Demolition Plan Existing IHNC Lock
B-50	Demolition Bypass Channel Plan
B-51	Demolition Typical Lock Sections
B-52	Hydraulic System 1200'/900' Ship/Barge Lock
B-53	Miter Gate Machinery 1200' Ship/Barge Lock
B-54	Miter Gate Machinery Loads 1200/900' Ship/Barge Lock
B-55-N	Tainter Valve 900' Ship/Barge Lock
B-55-T	Tainter Valve 1200' Ship/Barge Lock
B-56	Electrical - One Line Diagram 900'/1200' Ship/Barge Lock
B-57	Right of Way Ship And Barge Lock

No.	Title
B-58	Right of Way Ship And Barge Lock
B-59	Right of Way Ship And Barge Lock
B-60	(Reserved)
B-61	Plan And Profile St. Claude Ave. Bridge Replacement
B-62	Bridge Details St. Claude Bridge Replacement
B-63	Approach Ramp Sections St. Claude Ave. Bridge Replacement
B-64	Main Span - Super Structure Replacement
B-65	Main Span - Cross Section Claiborne Ave. Bridge Replacement
B-66	Pier Retrofit Claiborne Ave. Bridge Replacement
B-67	Boring 2-UL Undisturbed Boring
B-68	Boring 3-UL Undisturbed Boring
B-69	Boring 4-UL Undisturbed Boring
B-70	Boring 4-UL Undisturbed Boring Cont'd
B-71	Boring 8-UL Undisturbed Boring
B-72	Boring 9-UL Undisturbed Boring
B-73	Boring 9-UL Undisturbed Boring Cont'd
B-74	Boring 2-SCU Undisturbed Boring
B-75	Undisturbed Boring Log Boring 2-1U
B-76	Undisturbed Boring Log Boring 2-1U Cont'd
B-77	Undisturbed Boring Log Boring 2-1U Cont'd
B-78	Undisturbed Boring Log Boring 4-1U
B-79	Undisturbed Boring Log Boring 4-1U Cont'd
B-80	Undisturbed Boring Log Boring 4-1U Cont'd
B-81	Undisturbed Boring Log Boring NC-1U

No.	Title
B-82	Undisturbed Boring Log Boring NC-1U Cont'd
B-83	Undisturbed Boring Log Boring NC-2U
B-84	Undisturbed Boring Log Boring NC-2U Cont'd
B-85	Undisturbed Boring Log Boring NC-3U
B-85A	Undisturbed Borings
B-85B	Boring Logs
B-86	Cohesive Strength Plot Reach I Existing Levee Protection
B-87	Cohesive Strength Plot Reach I Existing Channel
B-88	Cohesive Strength Plot Reach II
B-89	Soils Stability Sta. 23+00 Lock B/L To New Lock
B-90	Soils Stability Sta. 13+05 Lock B/L To New Lock
B-91	Soils Stability Sta. 67+00 (Relocation Corridor)
B-92	Soils Stability Sta. 619+00 (Relocation Corridor)
B-93	Soil Stability Sta. 619+00 MRL B/L To 13+05 Lock B/L
B-94	Soil Stability West Side
B-95	Soil Stability East Side
B-96	Cantilevered Sheetpile Stability Sta. 13+05 Lock B/L To New Lock
B-97	Ultimate Pile Capacity 14-inch Concrete Pile
B-98	Ultimate Pile Capacity 14-inch Steel Pile
B-99	Ultimate Pile Capacity 48-inch Pipe Pile
B-99A	Ultimate Pile Capacity 12-inch Concrete Pile - Graving Site
B-100	Compression Index Plot Borings NC-1U, NC-2U & NC-3U
B-101	Preconsolidation Pressure Borings NC-1U, NC-2U & NC-3U
B-102A	Soil Stability - Sand Closure
B-102B	Sheet Pile Wall Stability - Sand Closure

No.	Title
B-102C	Cofferdam Cell Dimensions
B-103A	Soil Stability - Graving Site
B-103B	Geologic Profile - Lock Site
B-103C	Geologic Profile - Graving Site
B-104	Existing Channel
B-105	Existing Channel
B-106	Existing Channel
B-107	Proposed Relocations
B-108	Proposed Relocations
B-109	Proposed Relocations
B-110	Utilities Relocation Corridors
B-111	Utilities Relocation Corridors
B-112	Utilities Relocation Corridors
B-113	Utilities Relocation Corridors
B-114	Utilities Relocation Corridors
B-115	Utilities Relocation Corridors
B-116	Detour Routing Plan
B-117	Detour Routing Alternate Routes
B-118	LA. 46 Detour Routing Locations 1, 2, 3 & 4
B-119	LA. 46 Detour Routing Locations 5, 6, 7 & 8
B-120	LA. 46 Detour Routing Locations 9, 10, 11 & 12
A	Soil Boring Legend

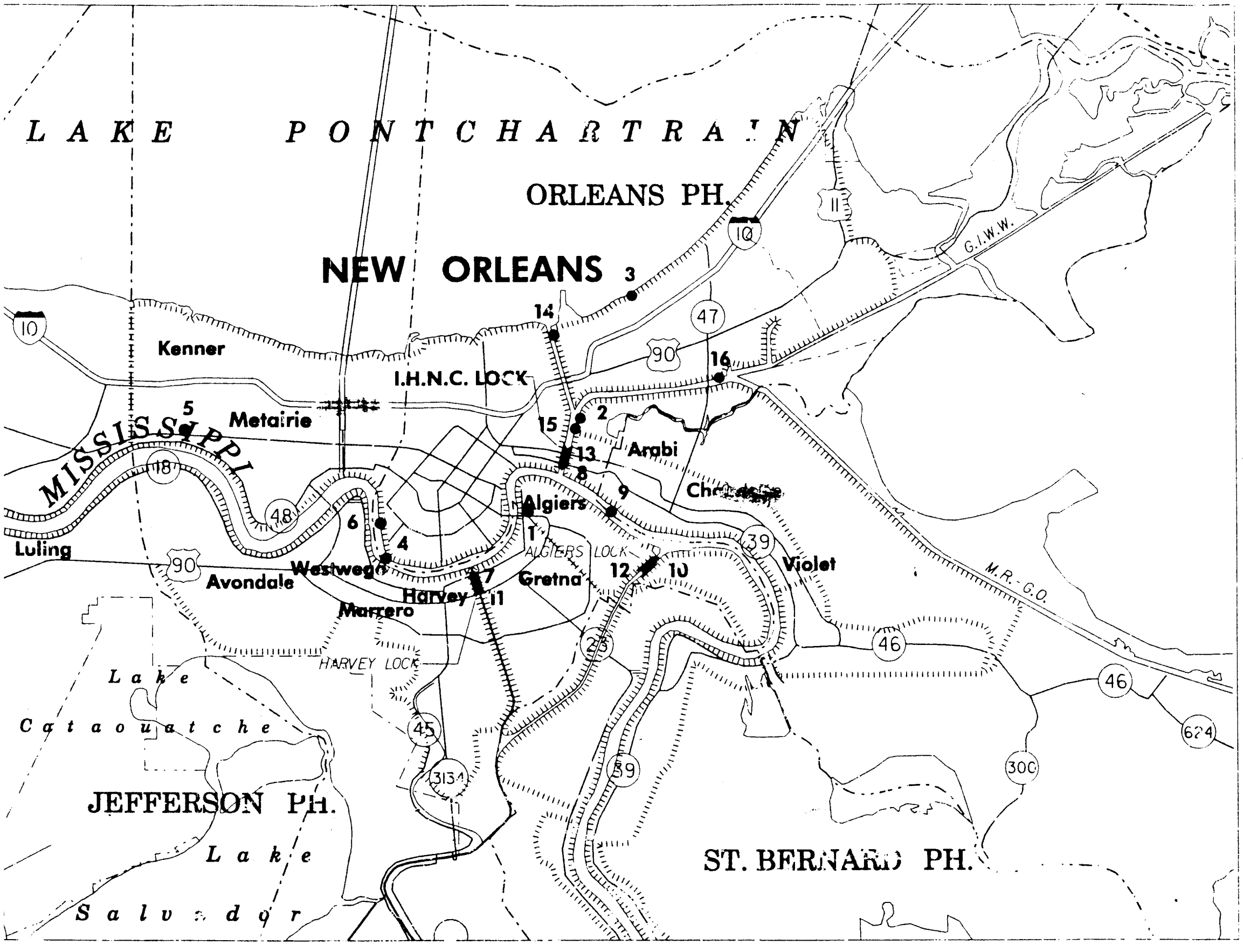

CLIMATOLOGICAL STATIONS

1 NEW ORLEANS at ALGIERS
2 NEW ORLEANS at DPS 5
3 NEW ORLEANS at DPS 14
4 NEW ORLEANS at AUDUBON PARK
5 NEW ORLEANS at MOISANT AIRPORT

STREAM GAGING STATIONS

6 MISSISSIPPI RIVER at CARROLLTON
7 MISSISSIPPI RIVER at HARVEY LOCK
8 MISSISSIPPI RIVER at IHNC LOCK
9 MISSISSIPPI RIVER at CHALMETTE
10 MISSISSIPPI RIVER at ALGIERS LOCK
11 IWW at HARVEY
12 IWW at ALGIERS LOCK
13 IWW at NEW ORLEANS (IHNC LOCK)
14 IWW at SEABROOK BRIDGE
15 IWW at FLORIDA AVE. BRIDGE
16 IWW at PAPIS ROAD BRIDGE

MISSISSIPPI RIVER - GULF OUTLET
NEW LOCK AND CONNECTING CHANNELS
INDUSTRIAL CANAL LOCK REPLACEMENT
FEASIBILITY STUDY

GAGE LOCATIONS

U.S. ARMY ENGINEER DISTRICT, NEW ORLEANS
CORPS OF ENGINEERS
NEW ORLEANS, LOUISIANA

DESIGNED BY
DRAWN BY
CHECKED BY
PLOT SCALE
PLOT DATE
AUG 19
DATE

PLATE B-

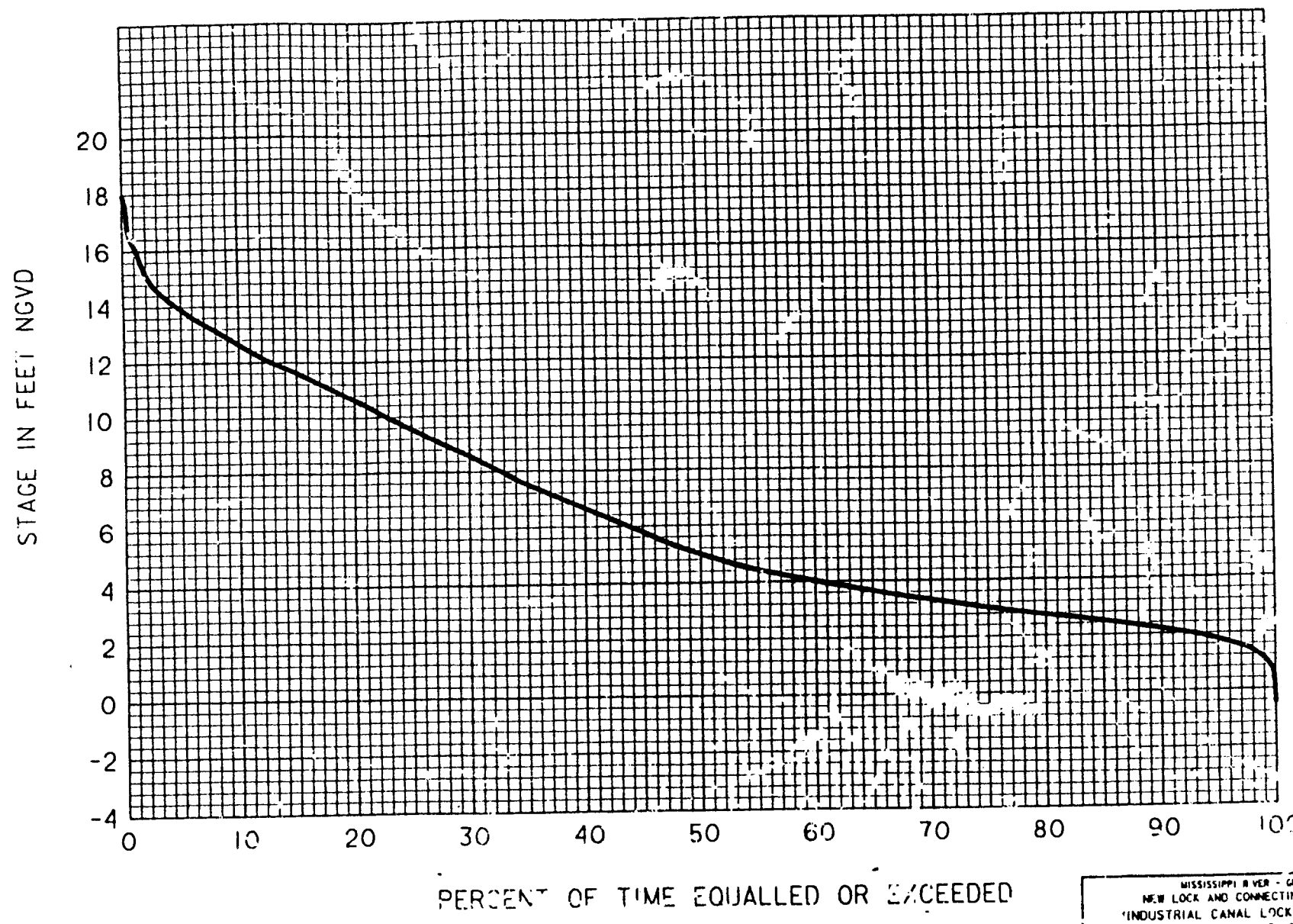

MISSISSIPPI RIVER - GULF OUTLET
NEW LOCK AND CONNECTING CHANNELS
(INDUSTRIAL CANAL LOCK REPLACEMENT)
FEASIBILITY STUDY

RIVER SIDE
STAGE DURATION (1945 - 1989)

U.S. ARMY ENGINEER DISTRICT, NEW ORLEANS
CORPS OF ENGINEERS
NEW ORLEANS, LOUISIANA

H 2-4092

PLATE B-2

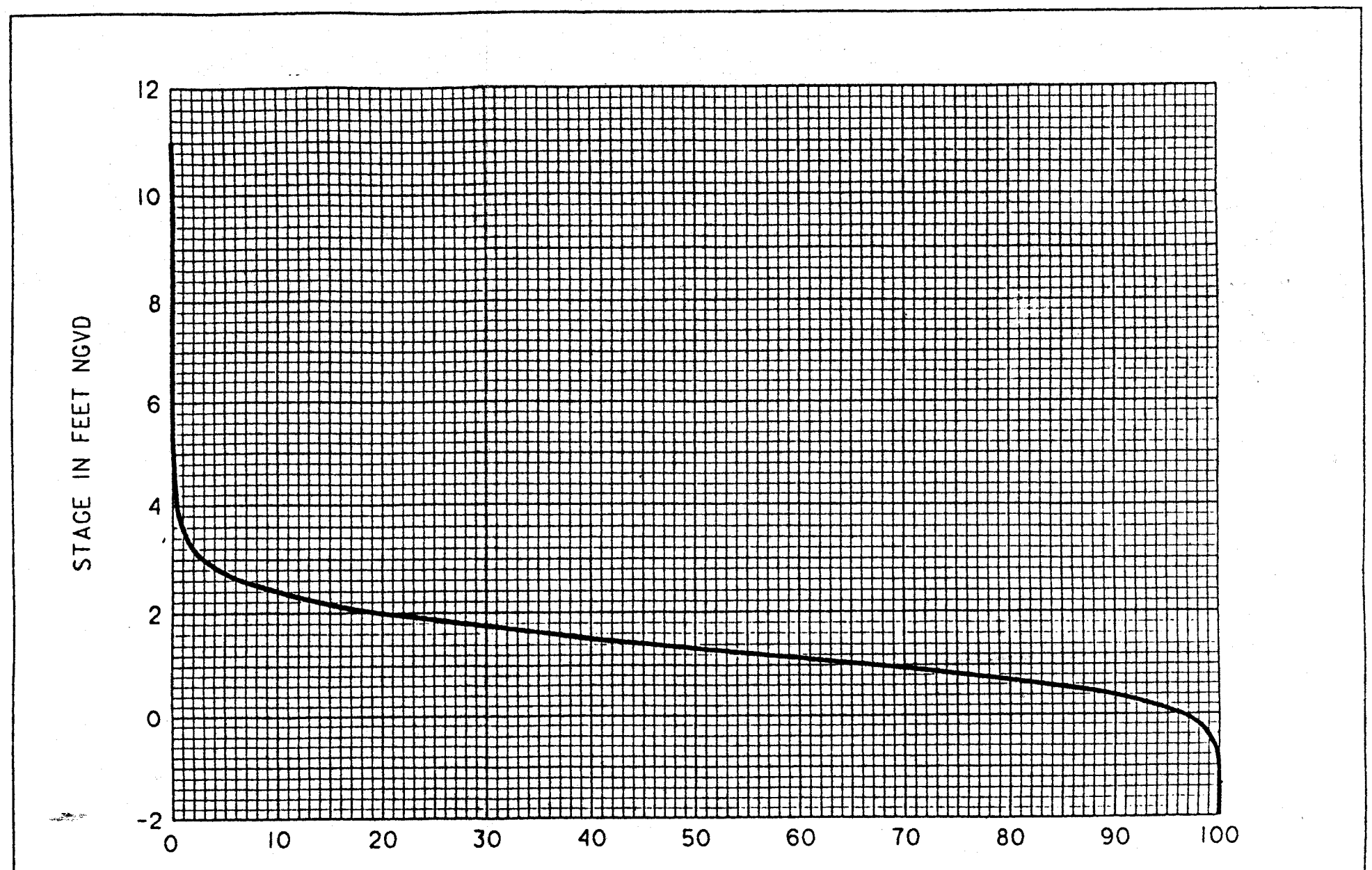

MISSISSIPPI RIVER - GULF OUTLET
NEW LOCK AND CONNECTING CHANNELS
(INDUSTRIAL CANAL LOCK REPLACEMENT)
FEASIBILITY STUDY

LAKE SIDE
STAGE DURATION (1945 - 1989)

H-2-4092

PLATE B-3

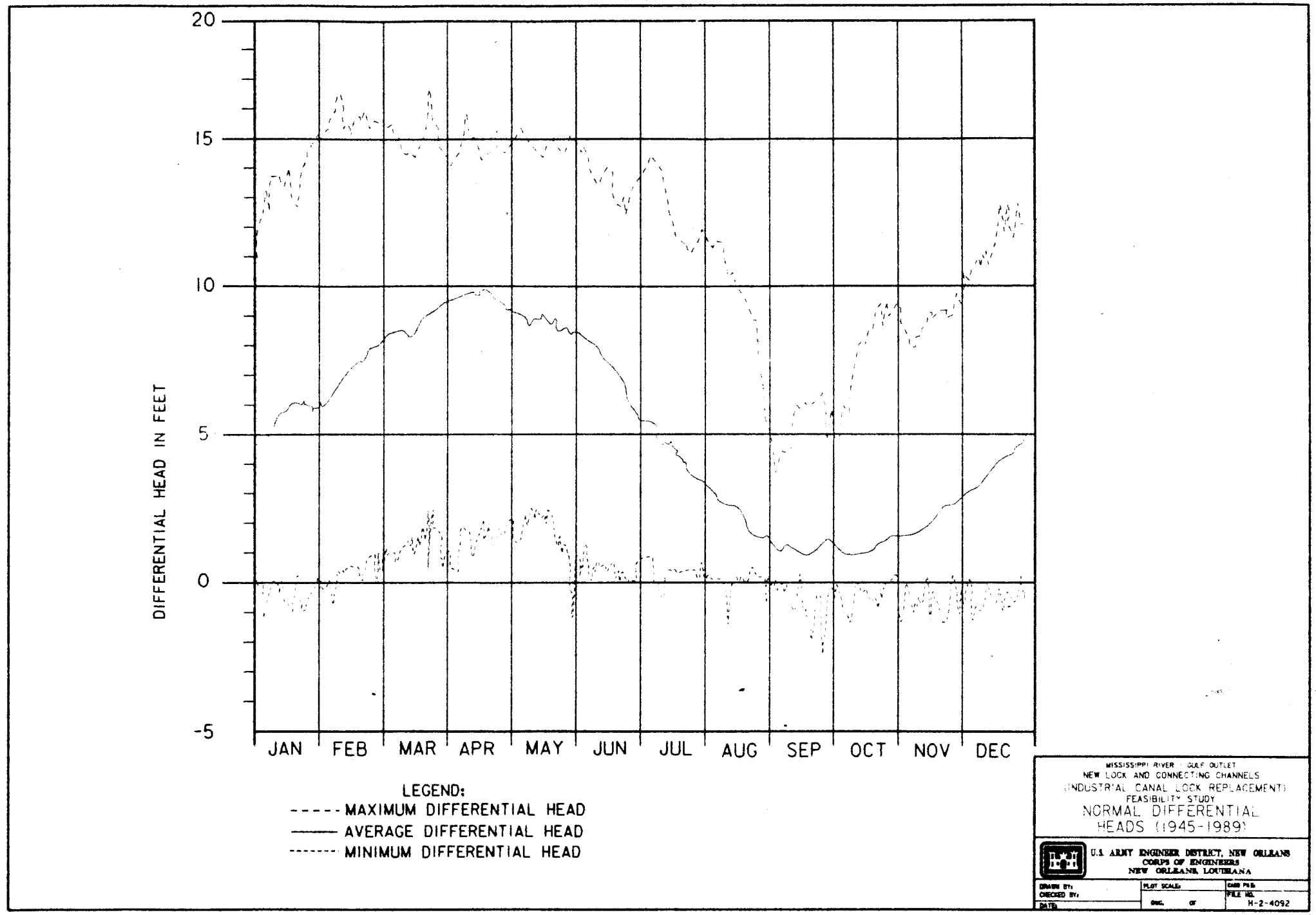

MISSISSIPPI RIVER - GULF OUTLET
NEW LOCK AND CONNECTING CHANNELS
(INDUSTRIAL CANAL LOCK REPLACEMENT)
FEASIBILITY STUDY

NORMAL DIFFERENTIAL HEADS (1945-1989)

U.S. ARMY ENGINEER DISTRICT, NEW ORLEANS
CORPS OF ENGINEERS
NEW ORLEANS, LOUISIANA

DRAWN BY:	PLOT SCALE:	CARD PNCH:
CHECKED BY:	SHEET OF	FILE NO. H-2-4092
DATE:		

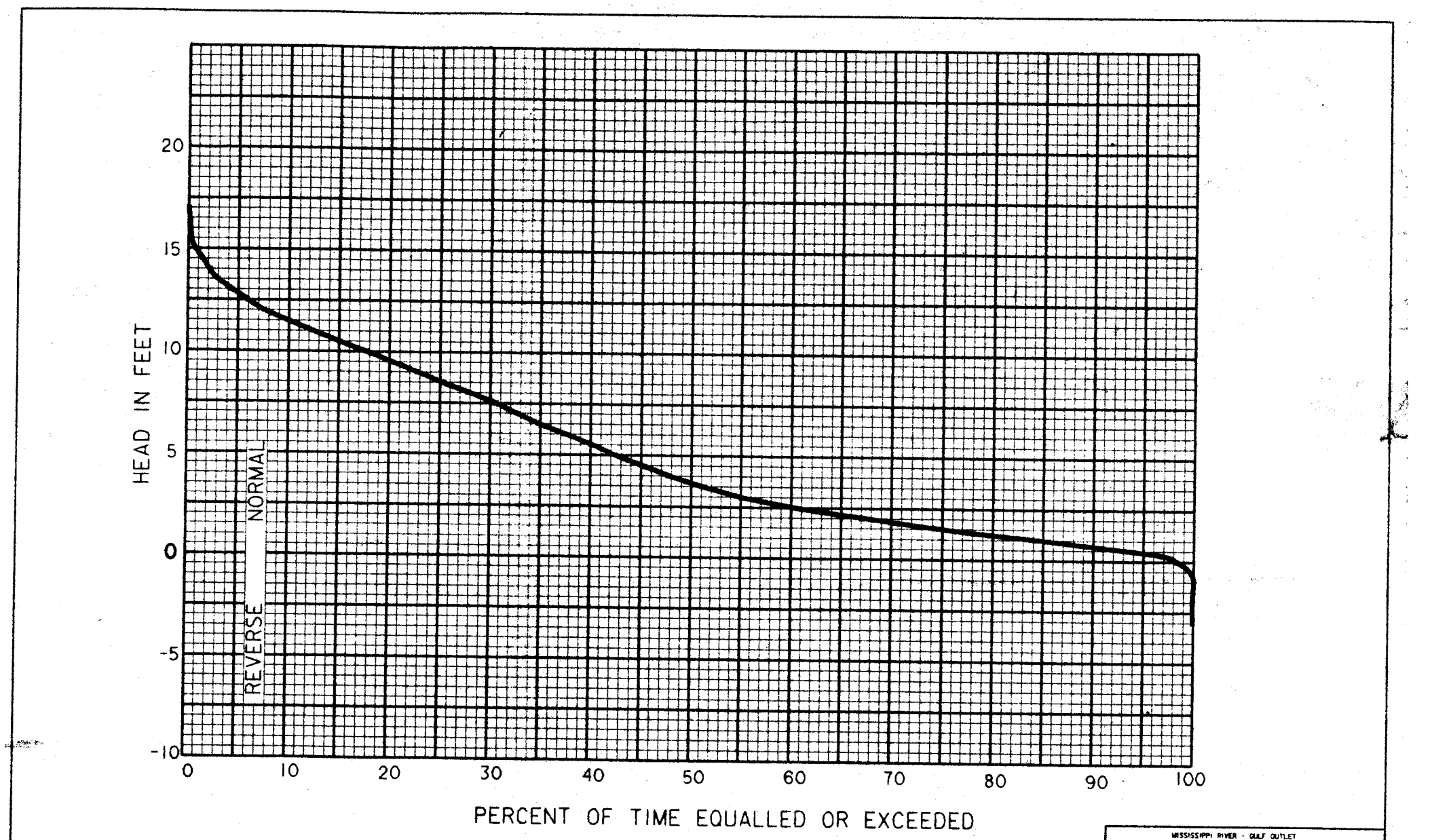

MISSISSIPPI RIVER - GULF OUTLET
NEW LOCK AND CONNECTING CHANNELS
(INDUSTRIAL CANAL LOCK REPLACEMENT)
FEASIBILITY STUDY

NORMAL DIFFERENTIAL HEAD DURATION (1945 - 1989)

U.S. ARMY ENGINEER DISTRICT, NEW ORLEANS
CORPS OF ENGINEERS
NEW ORLEANS, LOUISIANA

M-2-4092

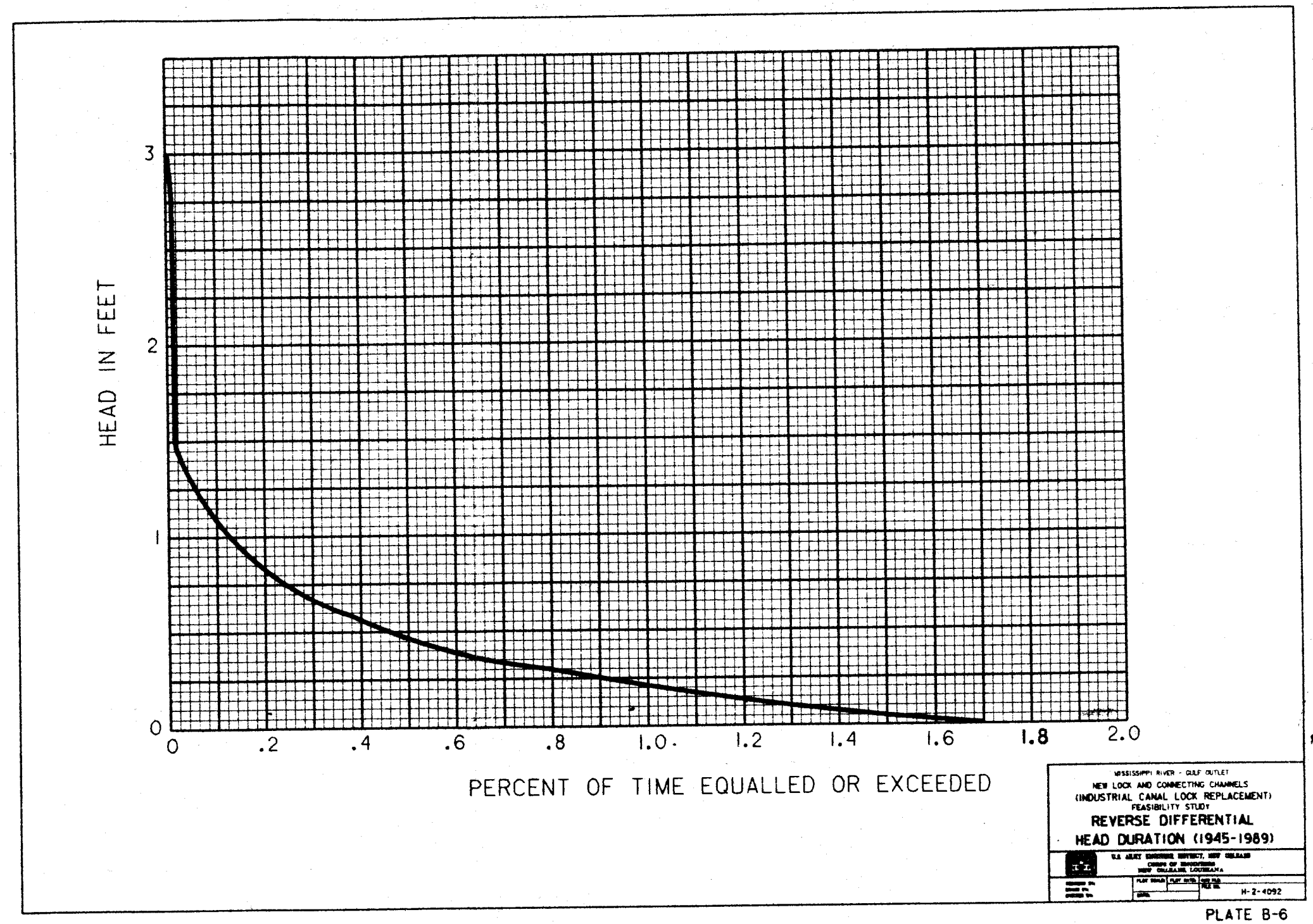

MISSISSIPPI RIVER - GULF OUTLET
NEW LOCK AND CONNECTING CHANNELS
(INDUSTRIAL CANAL LOCK REPLACEMENT)
FEASIBILITY STUDY

REVERSE DIFFERENTIAL HEAD DURATION (1945-1989)

U.S. ARMY ENGINEER DISTRICT, NEW ORLEANS
CORPS OF ENGINEERS
NEW ORLEANS, LOUISIANA

H-2-4092

PLATE B-6

MISSISSIPPI RIVER - GULF OUTLET
NEW LOCK AND CONNECTING CHANNELS
(INDUSTRIAL CANAL LOCK REPLACEMENT)
FEASIBILITY STUDY

VALVE TIME VS FILLING TIME

110 FT x 900 FT LOCK

U.S. ARMY ENGINEER DISTRICT, NEW ORLEANS
CORPS OF ENGINEERS
NEW ORLEANS, LOUISIANA

H-2-6092

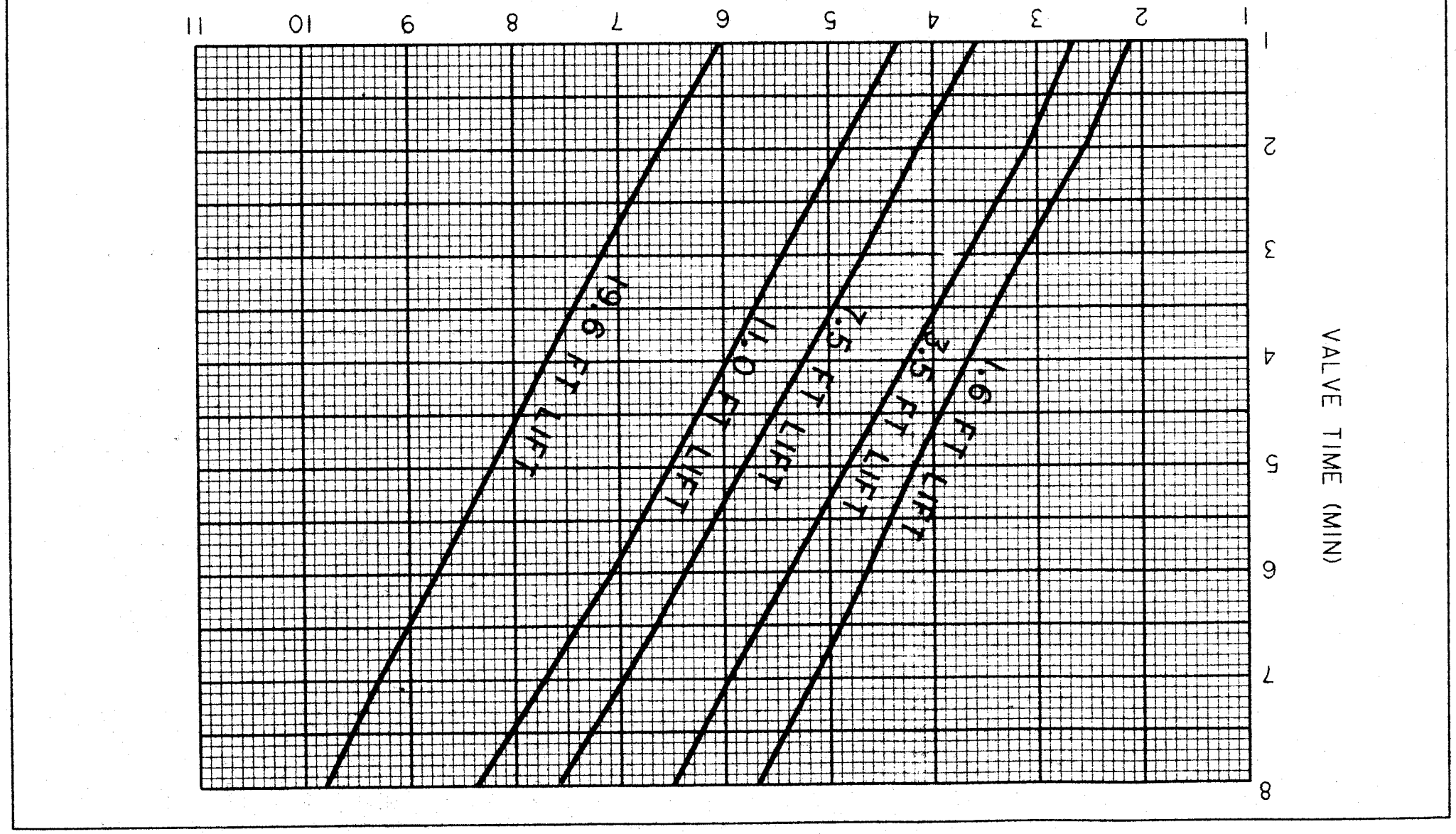

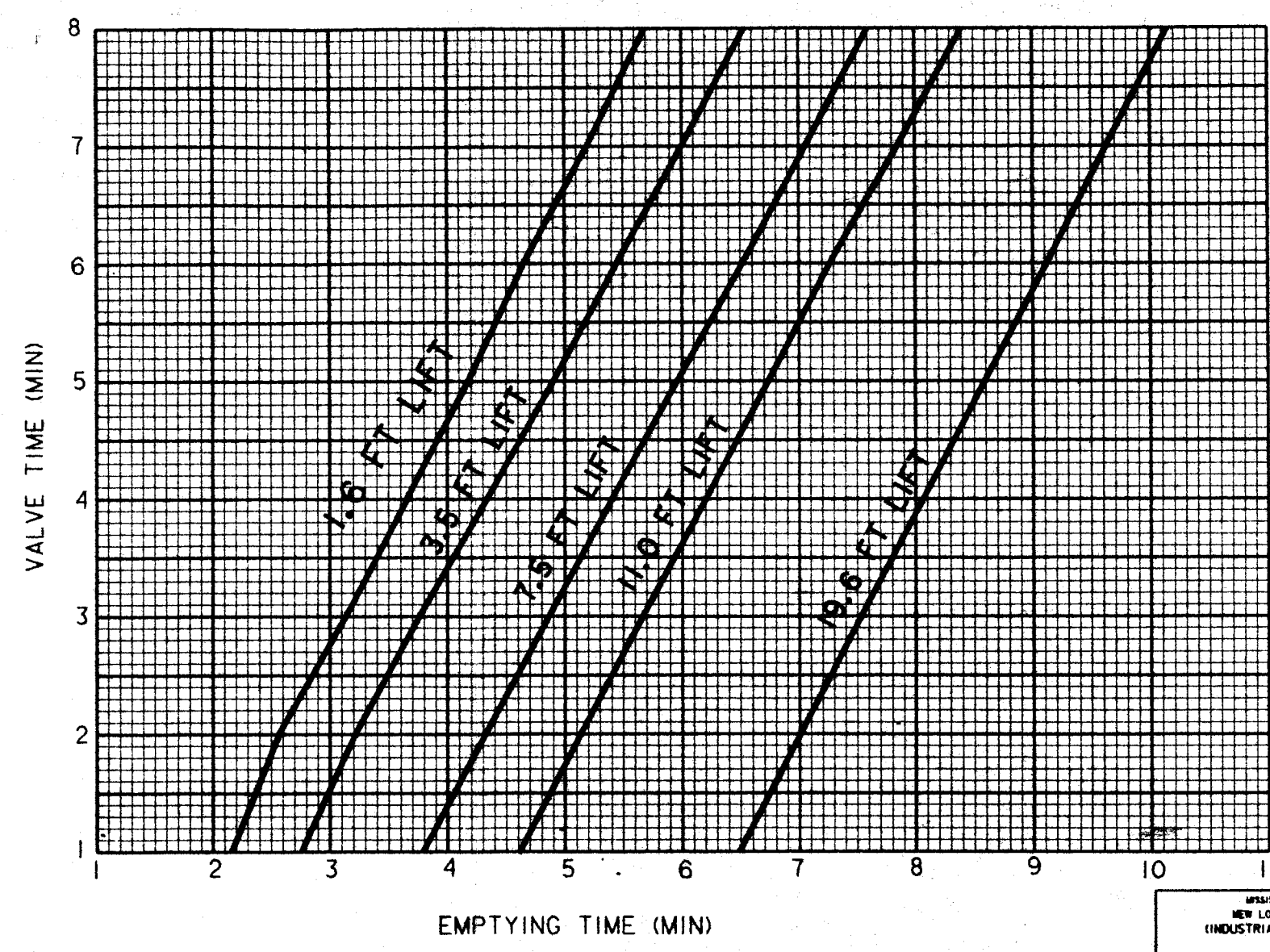

MISSISSIPPI RIVER - GULF OUTLET
NEW LOCK AND CONNECTING CHANNELS
(INDUSTRIAL CANAL LOCK REPLACEMENT)
FEASIBILITY STUDY

VALVE TIME vs EMPTYING TIME
110 FT x 900 FT LOCK

U.S. ARMY ENGINEER DISTRICT, NEW ORLEANS
CORPS OF ENGINEERS
NEW ORLEANS, LOUISIANA

H-2-4092

PLATE D-8

MISSISSIPPI RIVER - GULF OUTLET
NEW LOCK AND CONNECTING CHANNELS
(INDUSTRIAL CANAL LOCK REPLACEMENT)
FEASIBILITY STUDY

VALVE TIME VS FILLING TIME
110 FT × 1200 FT LOCK

U.S. ARMY ENGINEER DISTRICT, NEW ORLEANS
CORPS OF ENGINEERS
NEW ORLEANS, LOUISIANA

H-2-4092

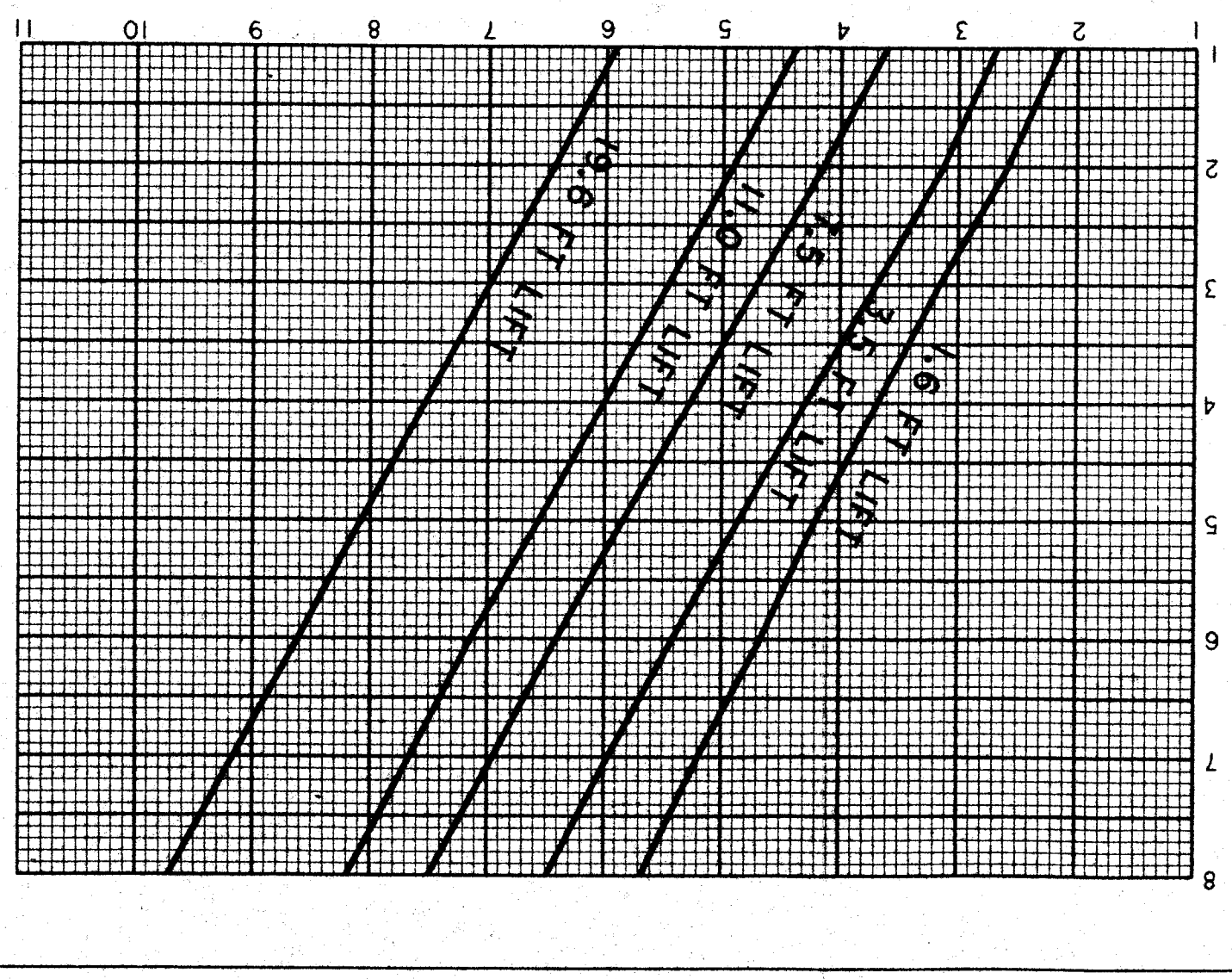

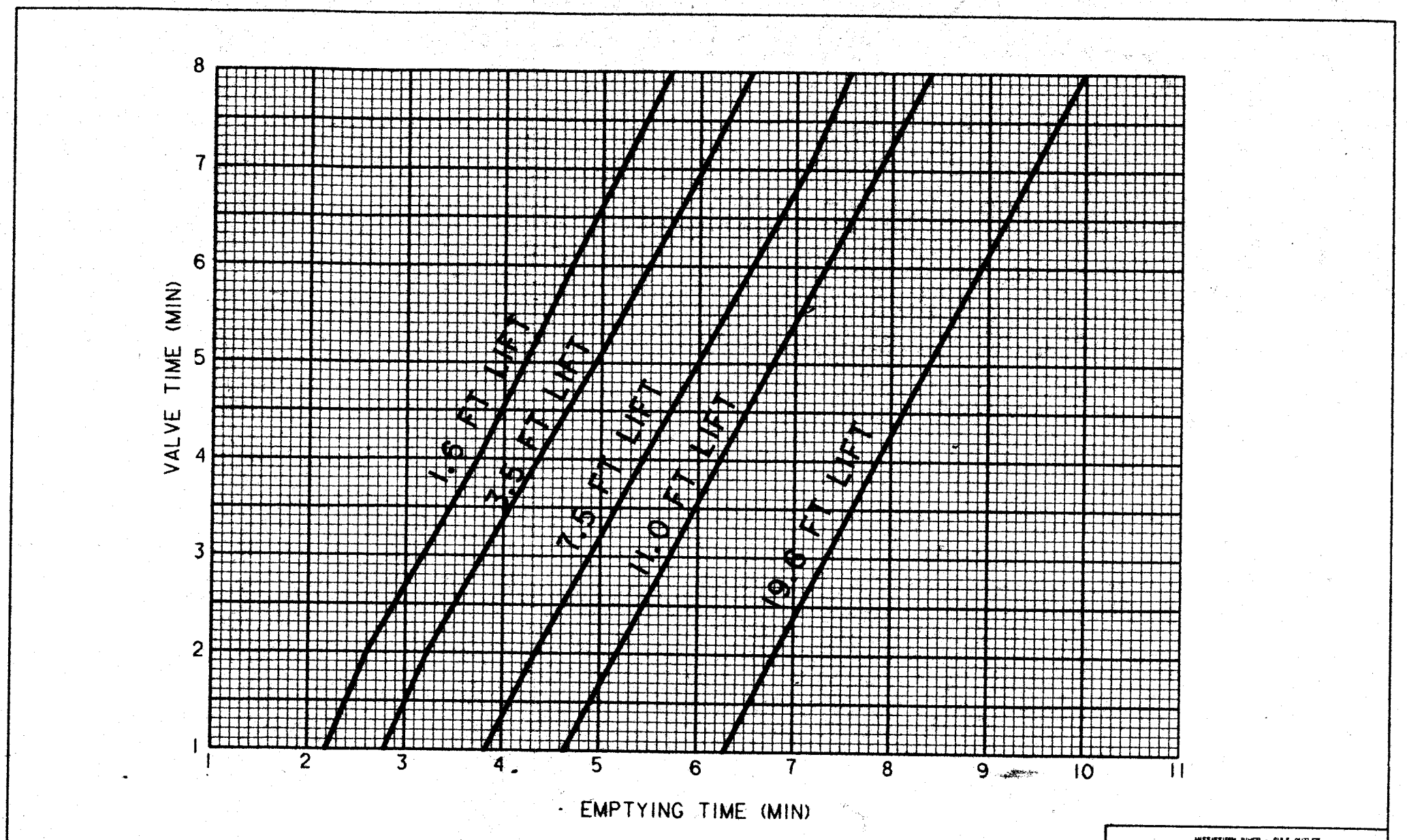

MISSISSIPPI RIVER - GULF OUTLET
NEW LOCK AND CONNECTING CHANNELS
(INDUSTRIAL CANAL LOCK REPLACEMENT)
FEASIBILITY STUDY

VALVE TIME vs EMPTYING TIME
110 FT x 1200 FT LOCK

U.S. ARMY ENGINEER DISTRICT, NEW ORLEANS
CORPS OF ENGINEERS
NEW ORLEANS, LOUISIANA

H-2-4092

PLATE B-10

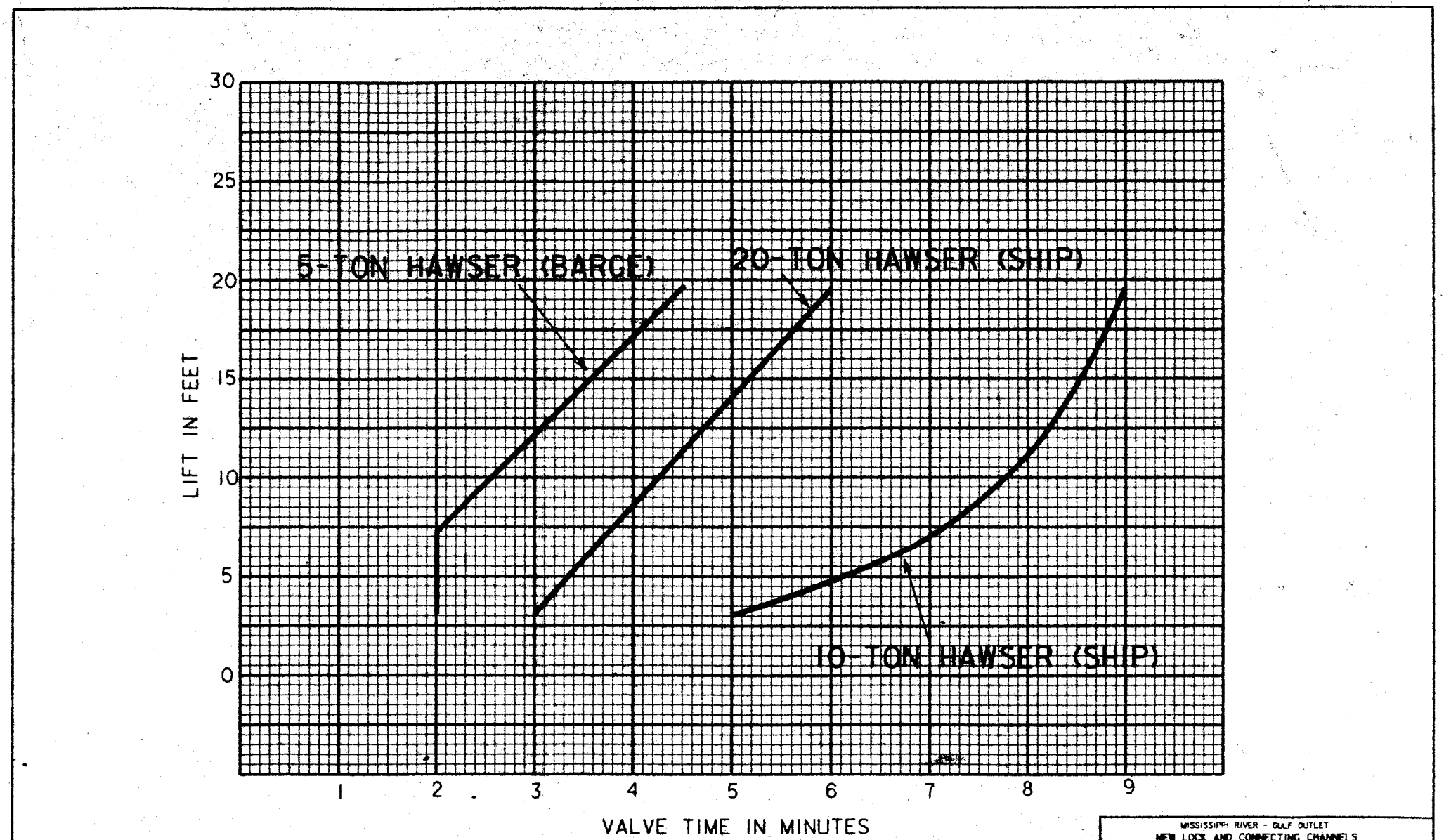

MISSISSIPPI RIVER - GULF OUTLET
NEW LOCK AND CONNECTING CHANNELS
(INDUSTRIAL CANAL LOCK REPLACEMENT)
FEASIBILITY STUDY

VALVE TIME vs LIFT

900 FT AND 1,200 FT LOCKS

U.S. ARMY ENGINEER DISTRICT, NEW ORLEANS
CORPS OF ENGINEERS
NEW ORLEANS, LOUISIANA

	PLOT SCALE	PLOT DATE	USE FOR
DESIGNED BY			
DRAWN BY	DATE		FILE NO. H-2-4092
CHECKED BY			

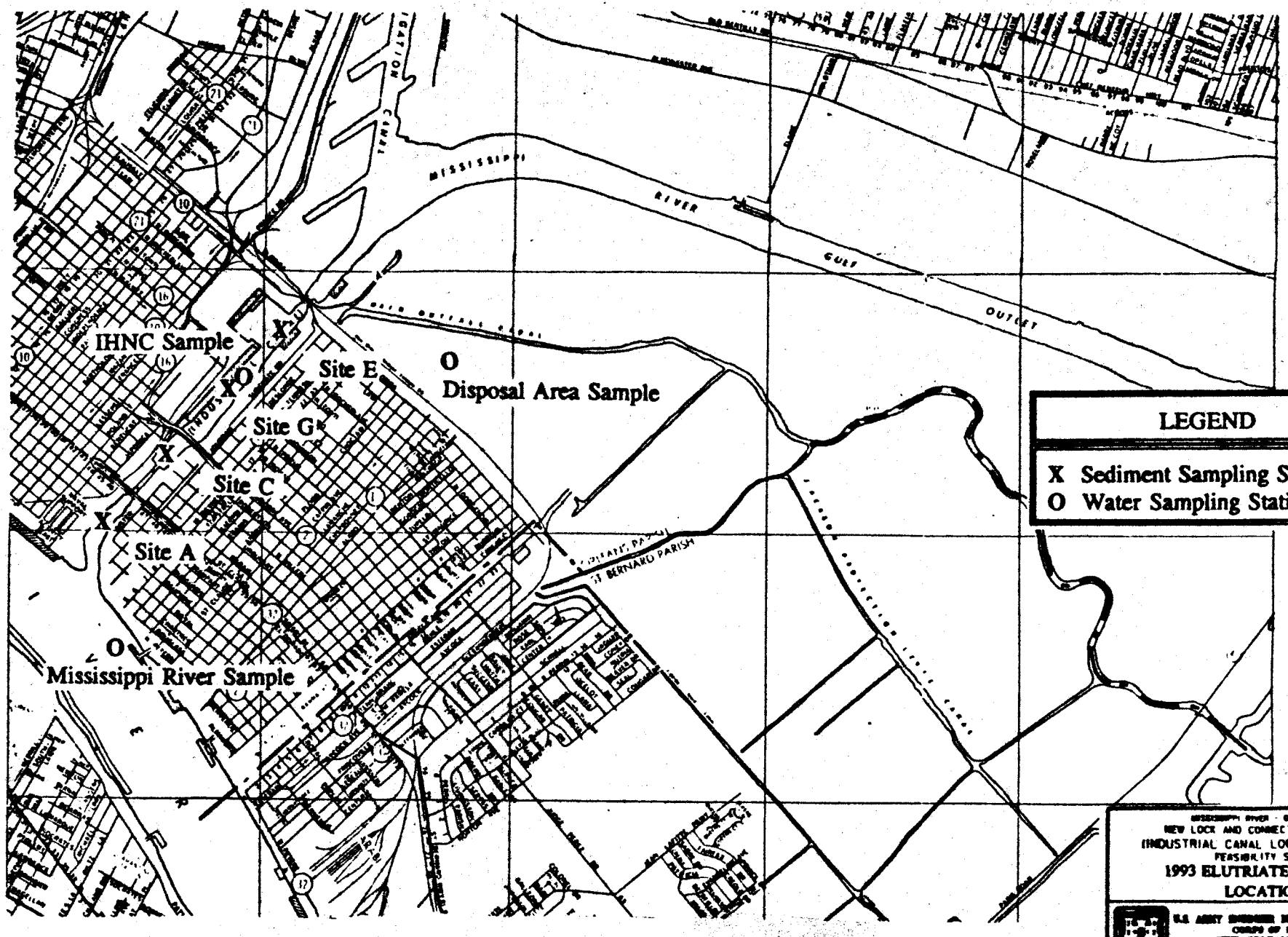
IHNC Sample
Site E
Site G
Site C
Site A
Disposal Area Sample
Mississippi River Sample
MISSISSIPPI
RIVER
GULF
OUTLET
LEGEND
X Sediment Sampling Stations
O Water Sampling Stations
MISSISSIPPI RIVER - GULF OUTLET
NEW LOCK AND CONNECTING CHANNELS
(INDUSTRIAL CANAL LOCK REPLACEMENT)
FEASIBILITY STUDY
1993 ELUTRIATE SAMPLING
LOCATIONS
U.S. ARMY ENGINEER DISTRICT, NEW ORLEANS
CORPS OF ENGINEERS
NEW ORLEANS, LOUISIANA

PLATE B-11A

I S A S

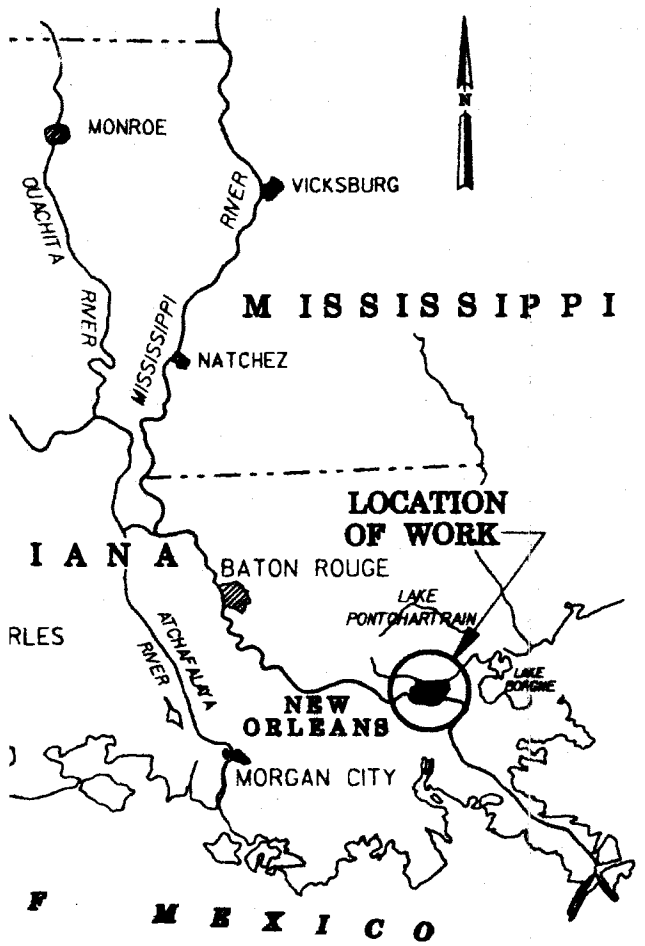

I N I T Y M A P

SCALE OF MILES

80 120 160 200

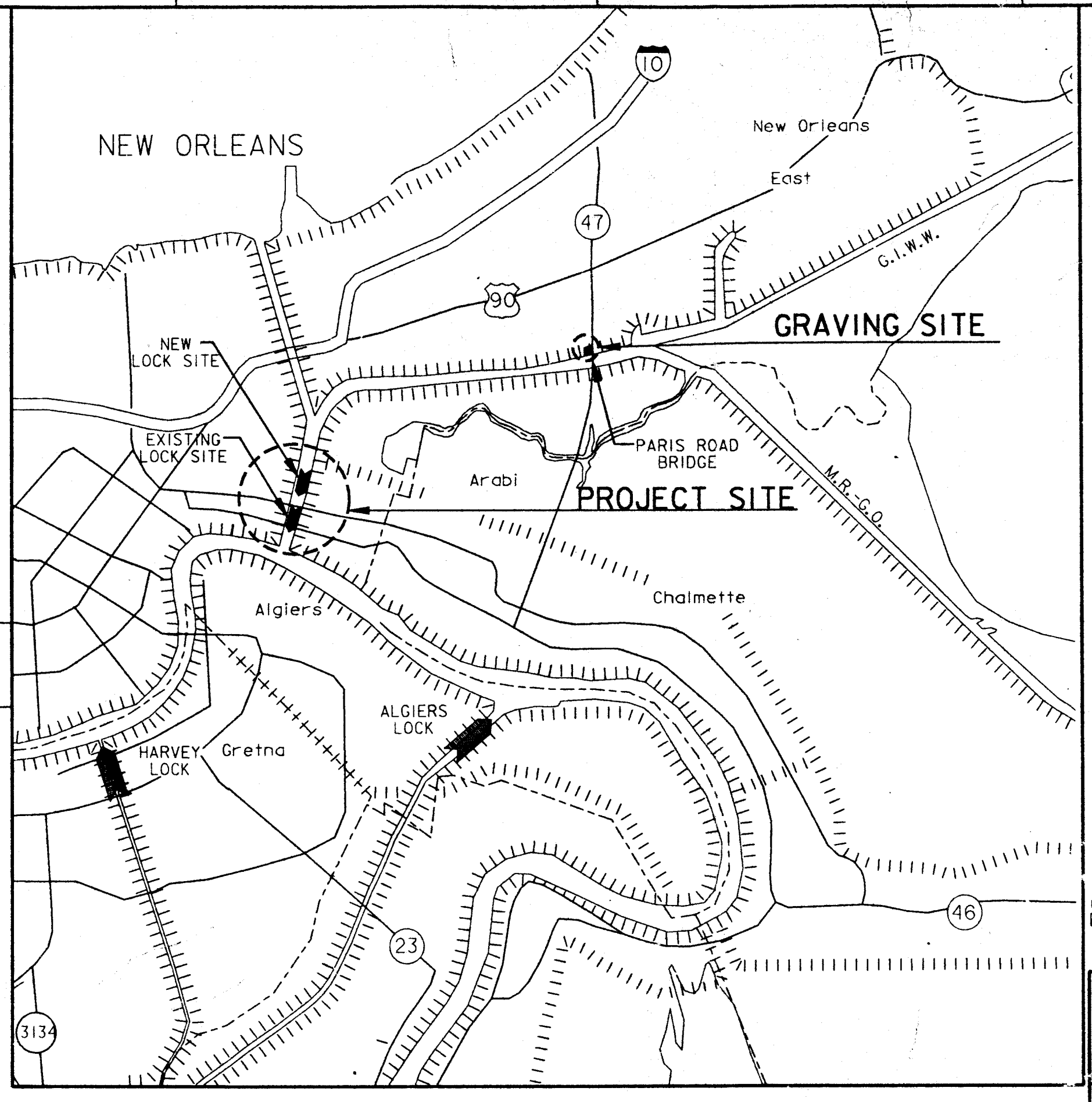

SCALE: 1" = 1 MILE

1 0 1 2 3 5 5

SITE MAP

SCALE: 1" = 1 MILE

MISSISSIPPI RIVER - GULF OUTLET
NEW LOCK AND CONNECTING CHANNELS
INDUSTRIAL CANAL LOCK REPLACEMENT
FEASIBILITY STUDY
NORTH OF CLAIBORNE AVENUE SITE
VICINITY AND SITE MAPS
LOCK, CHANNEL & GRAVING SITE

U.S. ARMY ENGINEER DISTRICT, NEW ORLEANS
CORPS OF ENGINEERS
NEW ORLEANS, LOUISIANA

DESIGNED BY: MNC	PLOT SCALE: 3600	PLOT DATE: JULY 98	SHEET NO. OF SHEETS
DRAWN BY: TMU		FILE NO. H-2	
CHECKED BY: MNG	DATE: OCTOBER 1998		

PLATE 12

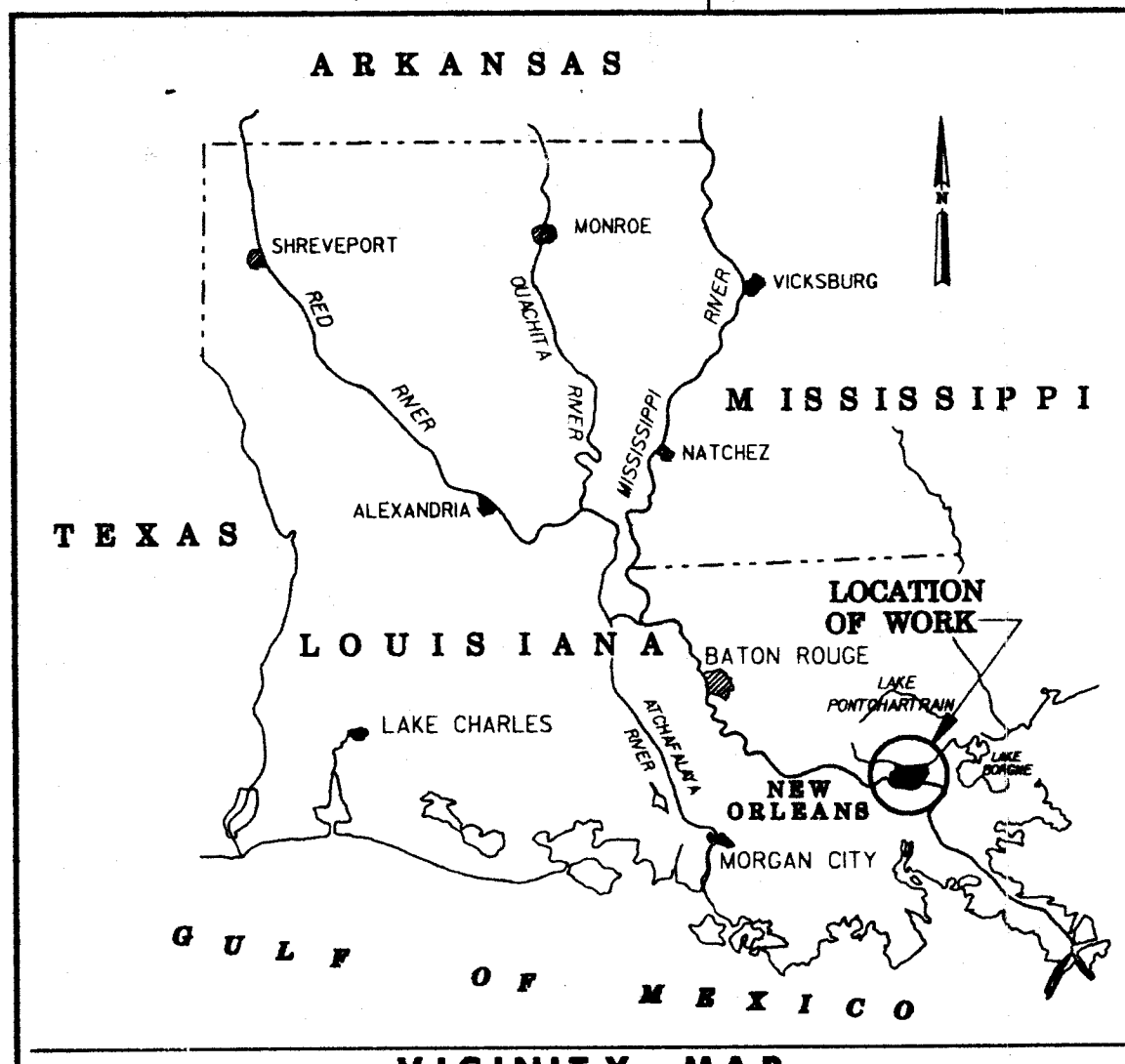

VICINITY MAP

SCALE OF MILES

40 0 40 80 120 160 200

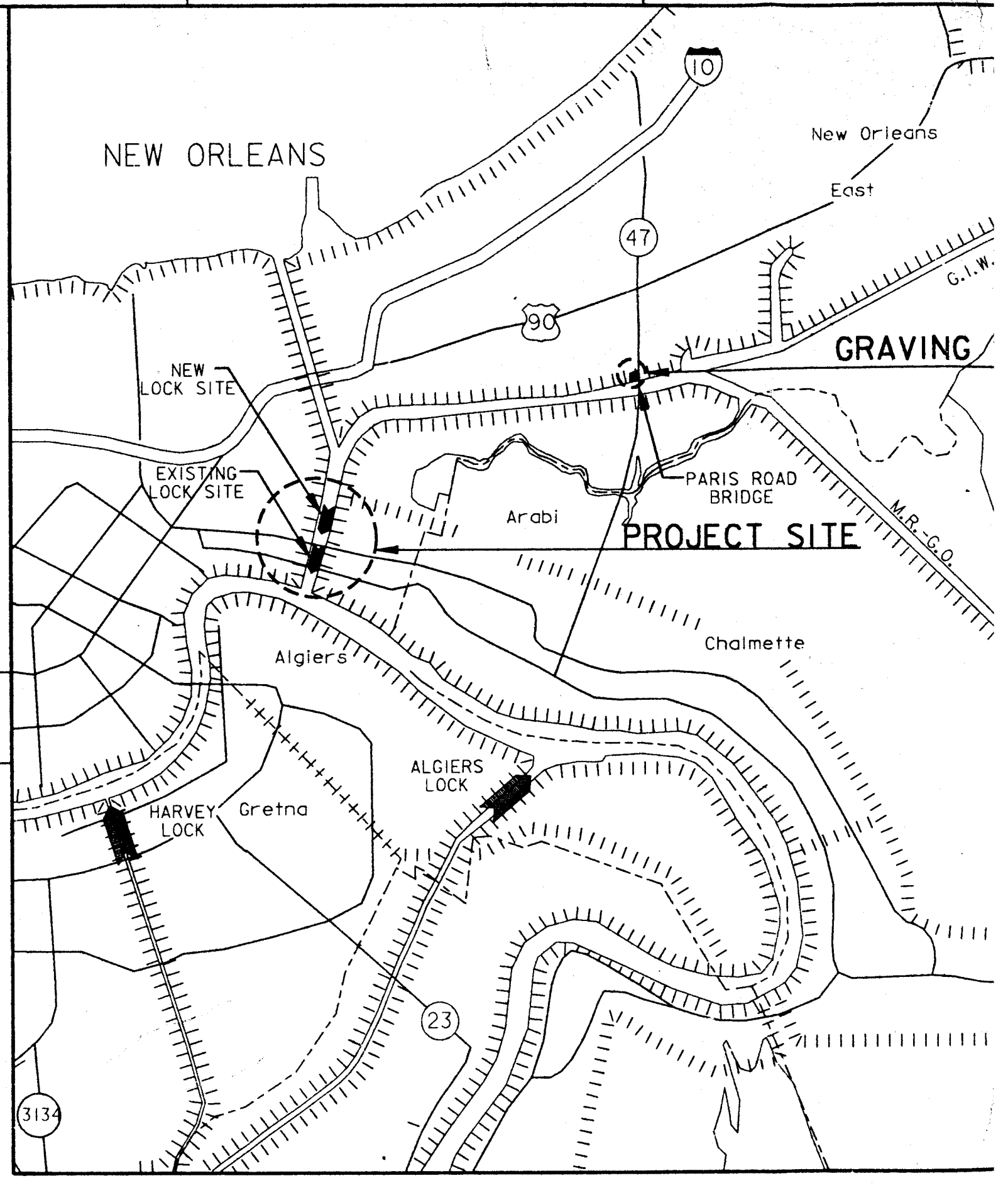

SITE MAP

SCALE: 1"= 1 MILE

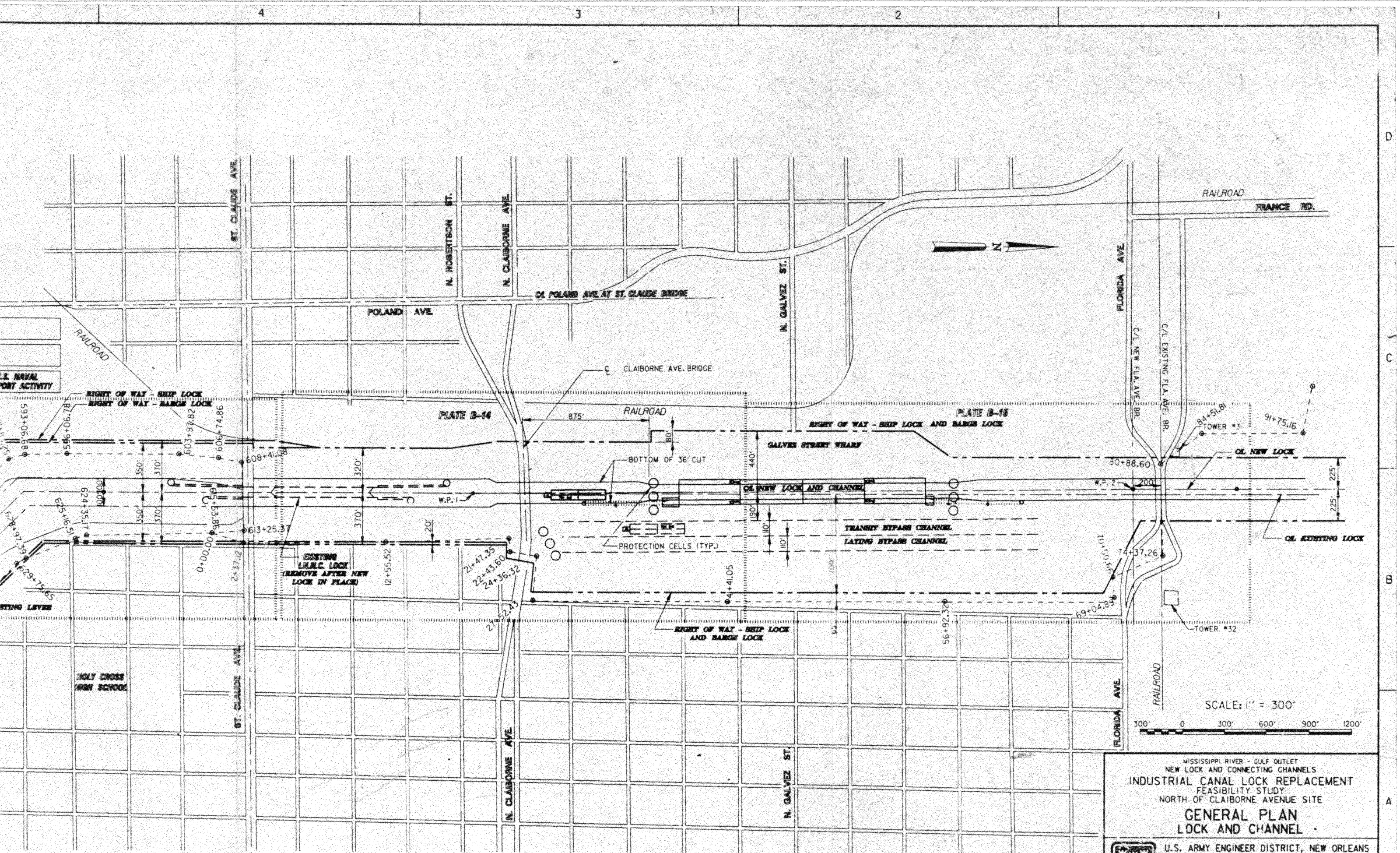

GENERAL PLAN

MISSISSIPPI RIVER - GULF OUTLET
NEW LOCK AND CONNECTING CHANNELS
INDUSTRIAL CANAL LOCK REPLACEMENT
FEASIBILITY STUDY
NORTH OF CLAIBORNE AVENUE SITE

GENERAL PLAN
LOCK AND CHANNEL

U.S. ARMY ENGINEER DISTRICT, NEW ORLEANS
CORPS OF ENGINEERS
NEW ORLEANS, LOUISIANA

DESIGNED BY: MHG	PLOT SCALE: 3600	PLOT DATE: SEPT 95	CADD FILE: PLATB12A.DGN	
DRAWN BY: TMU			FILE NO.	
CHECKED BY: MHG	DATE: OCTOBER 1996		H-2-40392	

PLATE B-12A

5 4 3 2

MISSISSIPPI RIVER

FLOW

RAILROAD

U.S. NAVAL SUPPORT ACTIVITY

RIGHT OF WAY - SHIP LOCK
RIGHT OF WAY - BARGE LOCK

PLATE B-13

PLATE B-14

ST. CLAUDE AVE.

N. ROBERTSON ST.

N. CLAIBORNE AVE.

N. GALVEZ ST.

POLAND AVE.

CL POLAND AVE. AT ST. CLAUDE BRIDGE

℄ CLAIBORNE AVE. BRIDGE

875'

80'

BOTTOM OF 36' CUT

GALVES STREET WHARF

RIGHT OF WAY - SHIP LOCK AND BARGE LOCK

OL/NEW LOCK AND CHANNEL

TRANSIT BYPASS CHANNEL

LAYING BYPASS CHANNEL

PROTECTION CELLS (TYP.)

440'

190'

110'

100'

350'

370'

320'

20'

W.P. 1

EXISTING L.M.N.C. LOCK (REMOVE AFTER NEW LOCK IN PLACE)

EXISTING LEVEE

HOLY CROSS HIGH SCHOOL

588+69.96

588+25.68

587+25.71

585+69.04

584+50.39

578+97.39

629+75.65

638+47.98

643+20.53

646+54.91

647+73.90

593+06.83

596+06.78

603+97.82

606+74.86

608+41.78

624+35.17

625+16.51

613+25.37

0+00.00

2+37.42

53+86.58

12+55.52

21+47.35

22+43.60

24+36.32

21+62.43

41+41.05

56+92.32

GENERAL PLAN

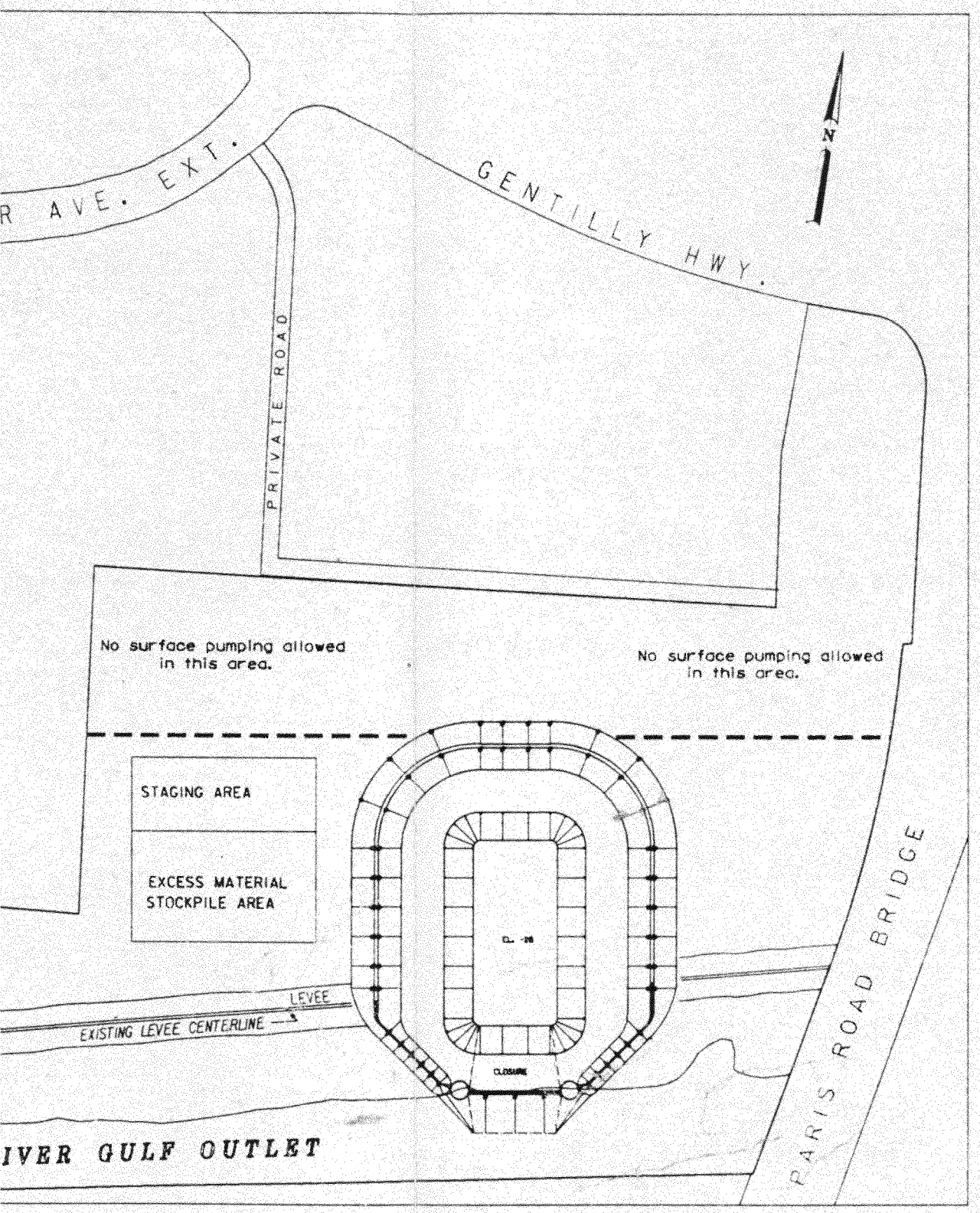

GRAVING SITE AREA MAP

SCALE: 1" = 200'

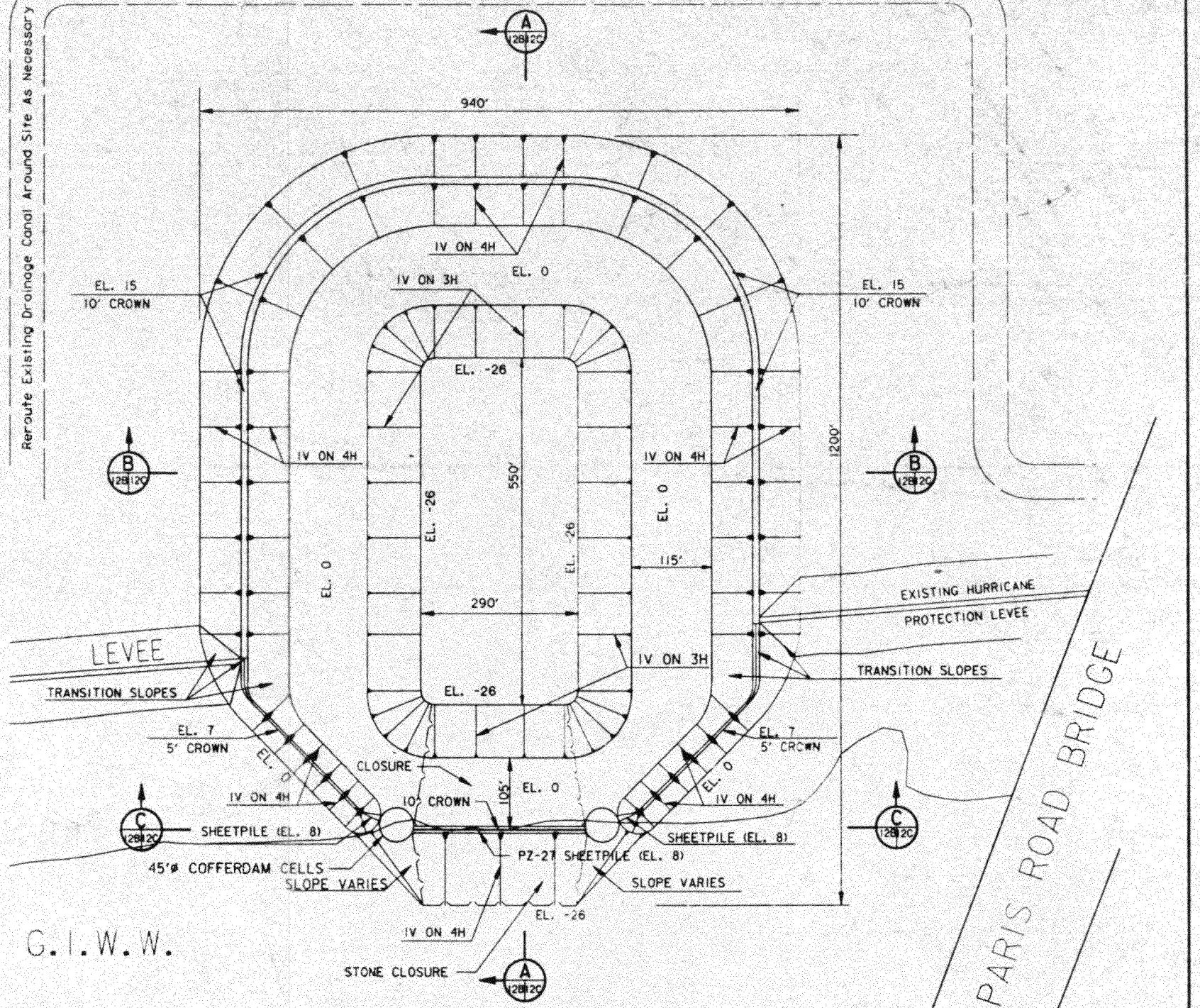

NOTE:
PILE FOUNDED GRADE BEAMS
NOT SHOWN FOR CLARITY

GRAVING SITE PLAN

NTS

SCALE: 1" = 200'

200' 0 200' 400' 600' 800'

MISSISSIPPI RIVER - GULF OUTLET
NEW LOCK AND CONNECTING CHANNELS
INDUSTRIAL CANAL LOCK REPLACEMENT
FEASIBILITY STUDY
NORTH OF CLAIBORNE AVENUE SITE

GRAVING SITE AND EXCAVATION PLAN

U.S. ARMY ENGINEER DISTRICT, NEW ORLEANS
CORPS OF ENGINEERS
NEW ORLEANS, LOUISIANA

DESIGNED BY:	KJT	PLOT SCALE:	PLOT DATE:	CADD FILE:	GRAVS TE.DGN
DRAWN BY:	KJT/CB	2400	SEPT 96	FILE NO.	
CHECKED BY:	KJT	DATE: APRIL 1996		H-2-40392	

PLATE 18-B

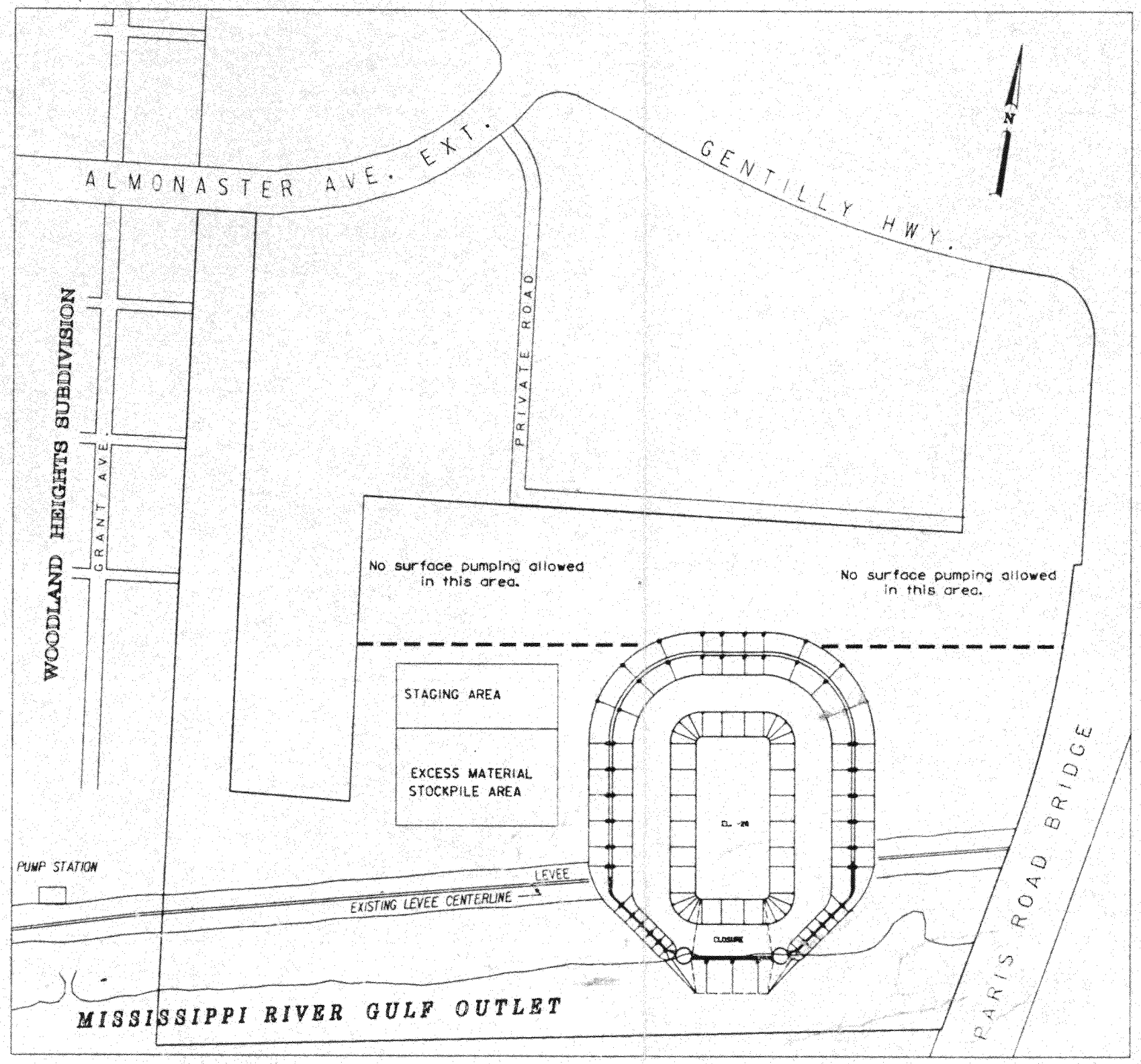

GRAVING SITE AREA MAP

SCALE: 1" = 200'

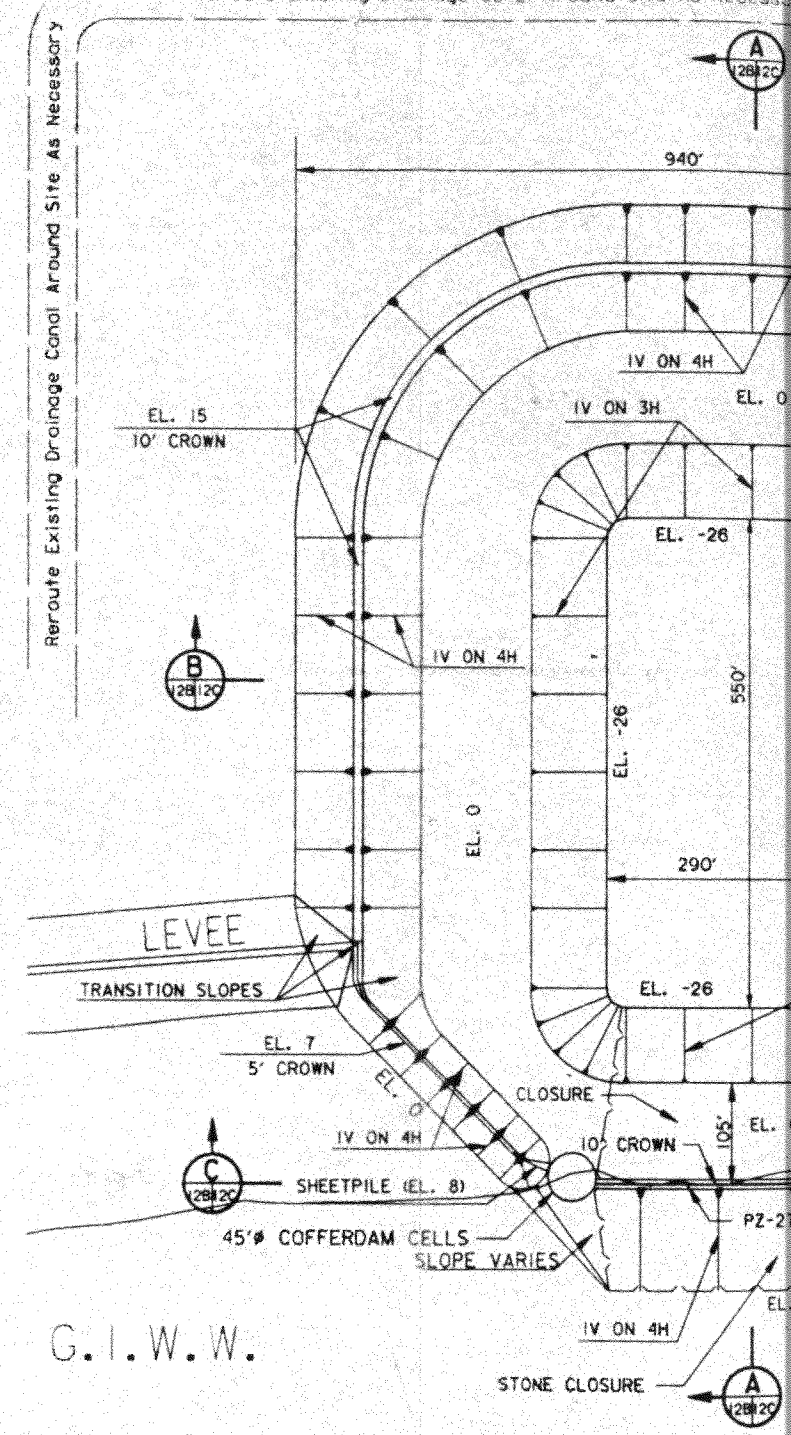

NOTE:
PILE FOUNDED GRADE BEAMS
NOT SHOWN FOR CLARITY

SCALE: 1" = 200'

200' 0 200' 400' 600' 800'

GRAVING SI

NTS

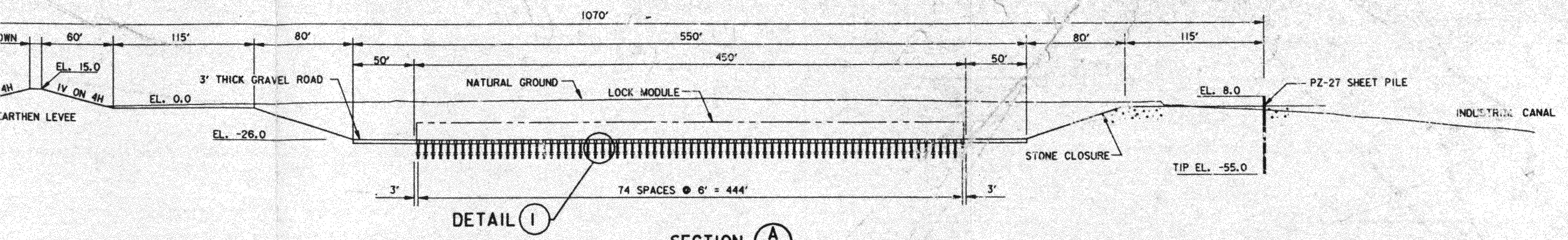

SECTION (A) 28|120

SCALE: 1" = 40'

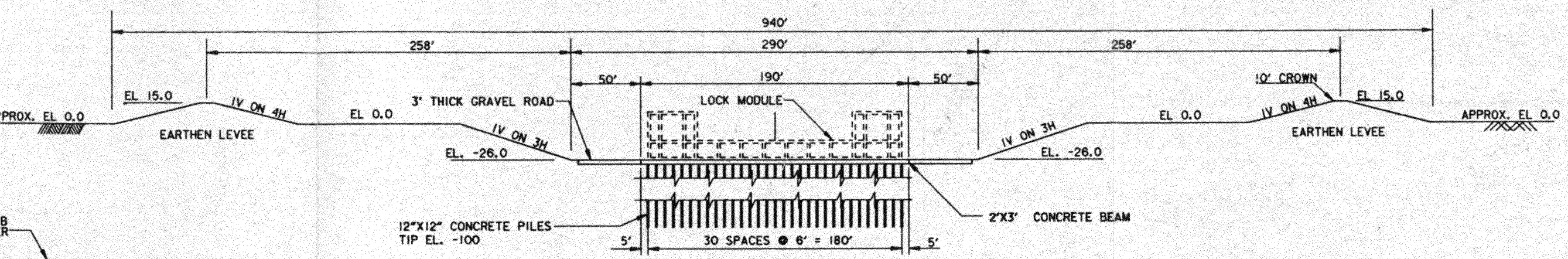

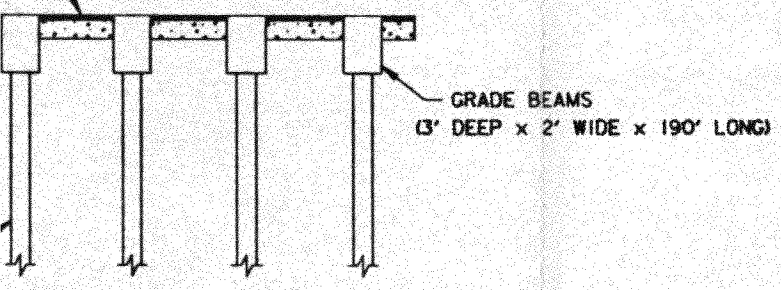

DETAIL (1)

SCALE: 1" = 5'

SECTION (B) 28|120

SCALE: 1" = 40'

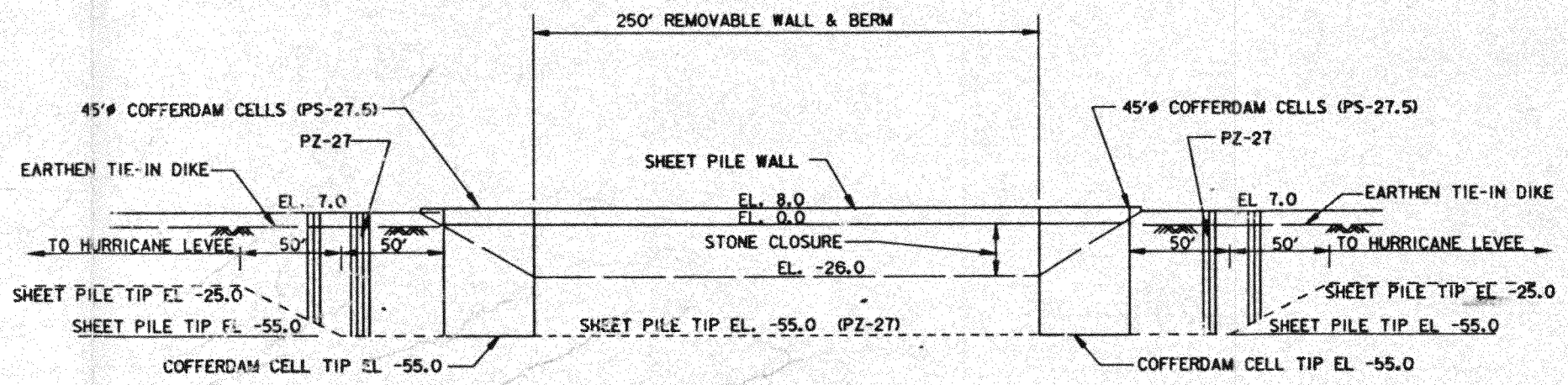

SECTION (C) 28|120

SCALE: 1" = 40'

SCALE: 1" = 5'

5' 0 5' 10' 15' 20'

SCALE: 1" = 40'

40' 0 40' 80' 120' 160'

MISSISSIPPI RIVER - GULF OUTLET
NEW LOCK AND CONNECTING CHANNELS
INDUSTRIAL CANAL LOCK REPLACEMENT
FEASIBILITY STUDY
NORTH OF CLAIBORNE AVENUE SITE

GRAVING SITE CROSS SECTIONS

U.S. ARMY ENGINEER DISTRICT, NEW ORLEANS
CORPS OF ENGINEERS
NEW ORLEANS, LOUISIANA

DESIGNED BY: COB	PLOT SCALE: 480	PLOT DATE: SEPT 96	CADD FILE: PLATB12C.DGN
DRAWN BY: COB			FILE NO. H-2-40392
CHECKED BY: KJT	DATE: JULY 1996		

PLATE B-12C

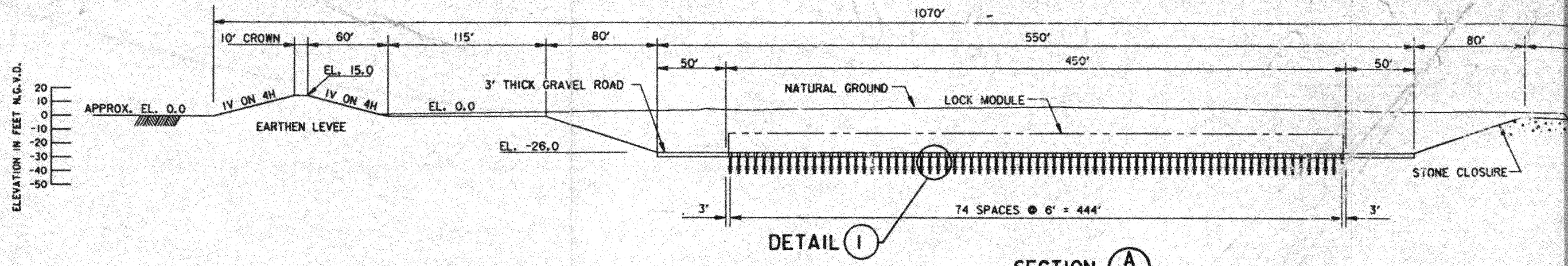

SECTION (A) (28|120)
SCALE: 1" = 40'

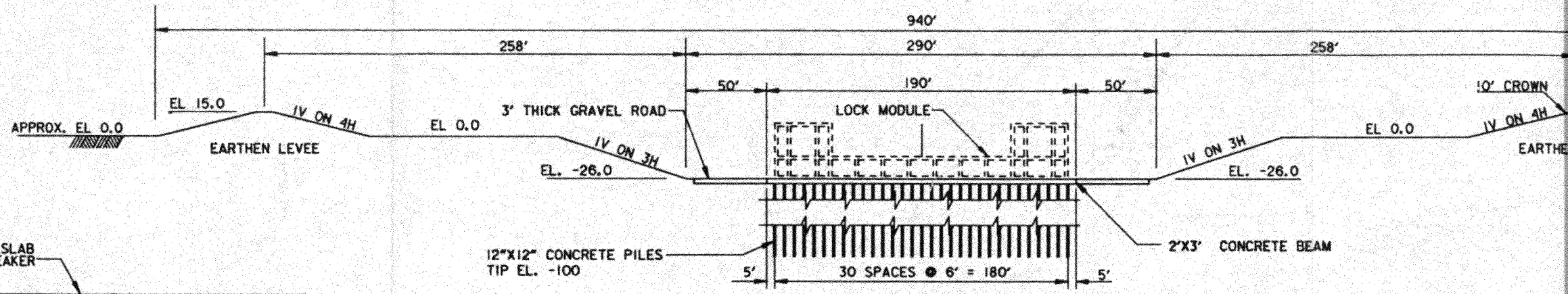

SECTION (B) (28|120)
SCALE: 1" = 40'

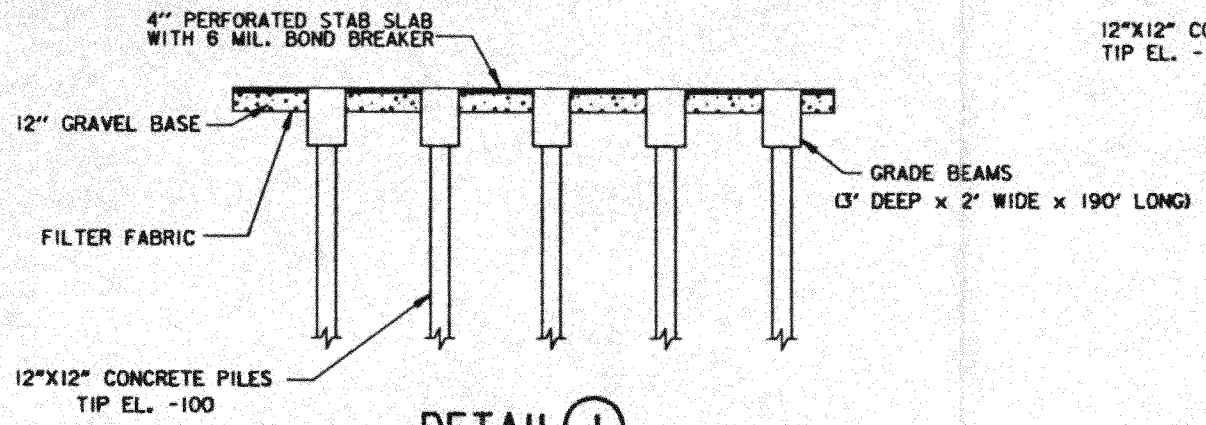

DETAIL (1)
SCALE: 1" = 5'

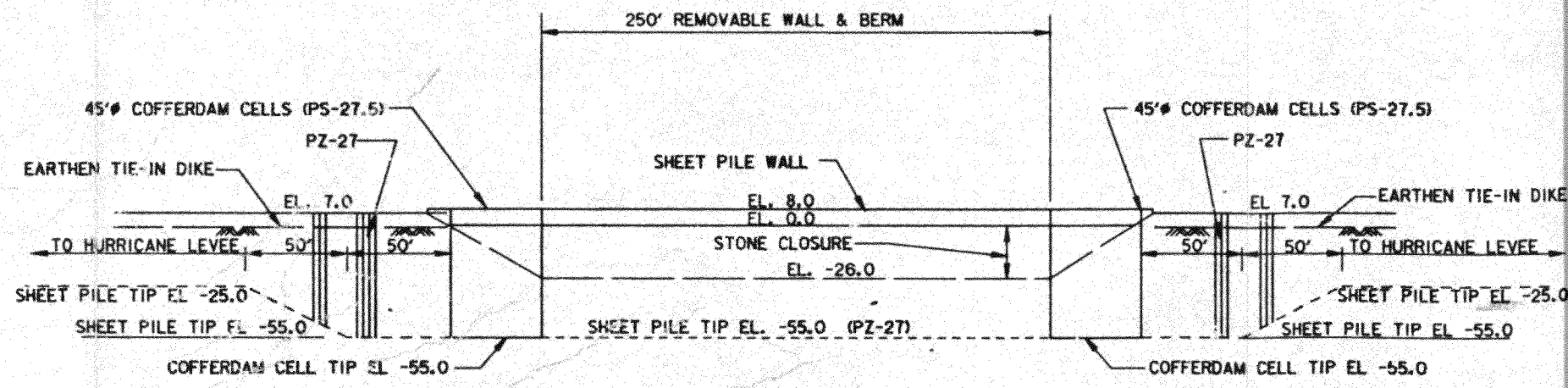

SECTION (C) (28|120)
SCALE: 1" = 40'

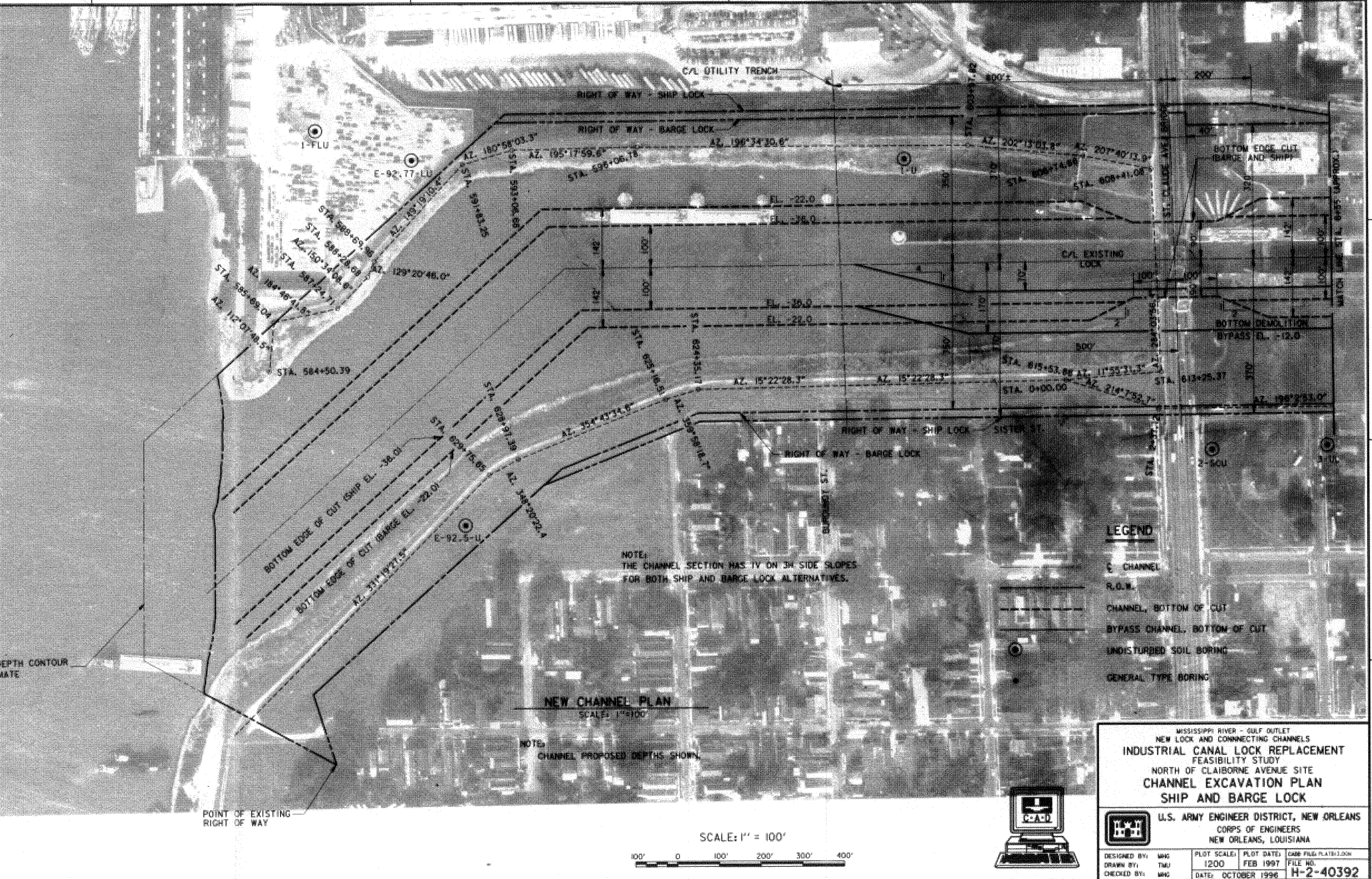

MISSISSIPPI RIVER - GULF OUTLET
NEW LOCK AND CONNNECTING CHANNELS
INDUSTRIAL CANAL LOCK REPLACEMENT
FEASIBILITY STUDY
NORTH OF CLAIBORNE AVENUE SITE

CHANNEL EXCAVATION PLAN
SHIP AND BARGE LOCK

U.S. ARMY ENGINEER DISTRICT, NEW ORLEANS
CORPS OF ENGINEERS
NEW ORLEANS, LOUISIANA

DESIGNED BY: MHG	PLOT SCALE: 1200	PLOT DATE: FEB 1997	CADD FILE: PLATE13.DGN	
DRAWN BY: TMU			FILE NO. H-2-40392	
CHECKED BY: MHG	DATE: OCTOBER 1996			

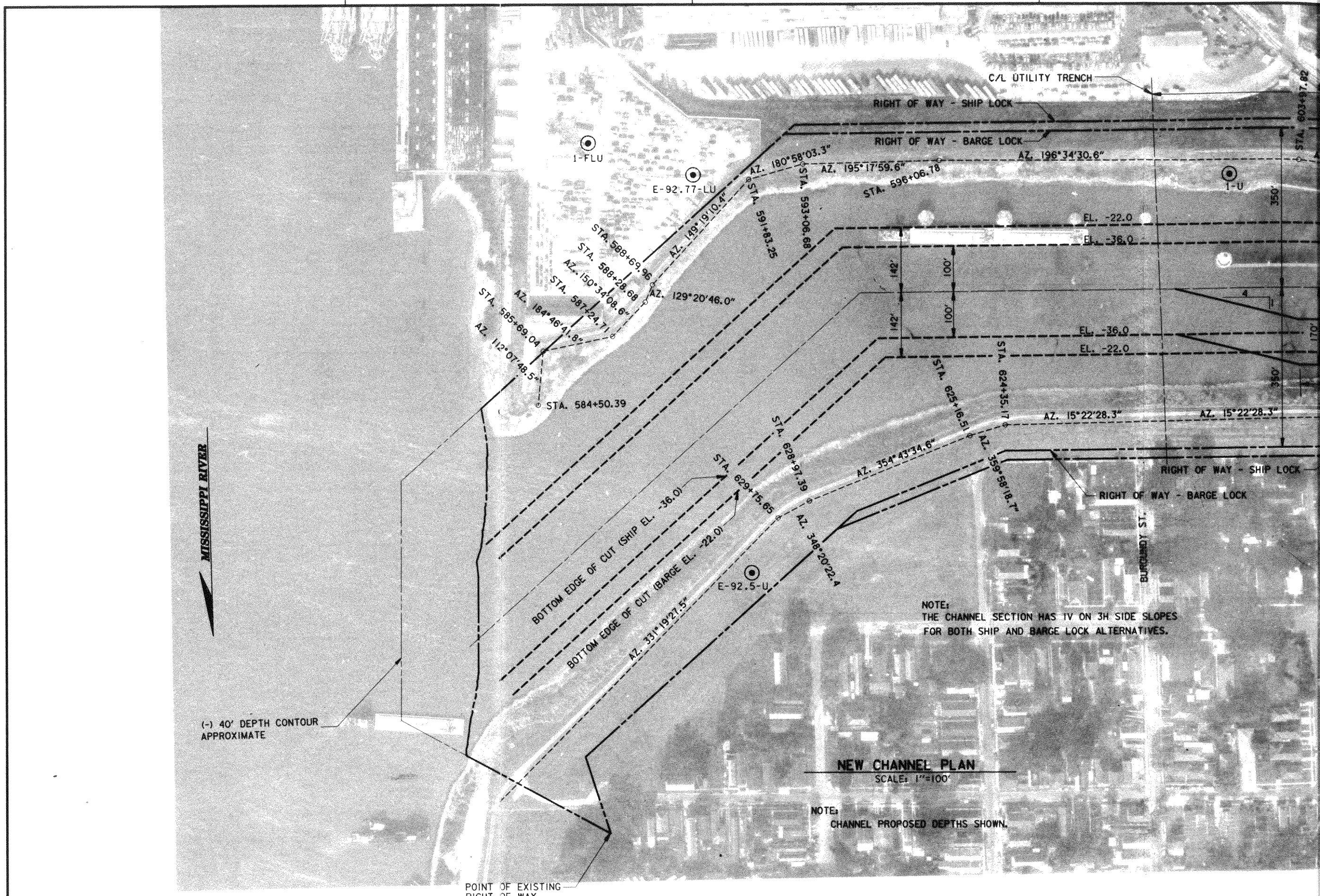
C/L UTILITY TRENCH
RIGHT OF WAY - SHIP LOCK
RIGHT OF WAY - BARGE LOCK
1-FLU
E-92.77-LU
1-U
AZ. 180°58'03.3"
AZ. 195°17'59.6"
AZ. 196°34'30.6"
STA. 596+06.78
STA. 593+06.68
STA. 591+83.25
STA. 603+97.82
AZ. 149°19'10.4"
STA. 588+69.96
STA. 588+28.68
AZ. 150°34'08.6"
AZ. 129°20'46.0"
STA. 587+24.71
AZ. 184°46'41.8"
STA. 585+69.04
AZ. 112°07'48.5"
STA. 584+50.39
EL. -22.0
EL. -36.0
100'
125'
4
1
350'
STA. 625+16.51
STA. 624+35.17
AZ. 15°22'28.3"
AZ. 354°43'34.6"
AZ. 359°58'18.7"
STA. 628+97.39
STA. 629+75.65
AZ. 348°20'22.4
AZ. 331°19'27.5"
BOTTOM EDGE OF CUT (SHIP EL. -36.0)
BOTTOM EDGE OF CUT (BARGE EL. -22.0)
E-92.5-U
MISSISSIPPI RIVER
BURLESON ST.
(-) 40' DEPTH CONTOUR
APPROXIMATE
POINT OF EXISTING
RIGHT OF WAY
NOTE:
THE CHANNEL SECTION HAS 1V ON 3H SIDE SLOPES
FOR BOTH SHIP AND BARGE LOCK ALTERNATIVES.
NEW CHANNEL PLAN
SCALE: 1"=100'
NOTE:
CHANNEL PROPOSED DEPTHS SHOWN.
SCALE: 1" = 100'
100' 0 100' 200' 300' 400'

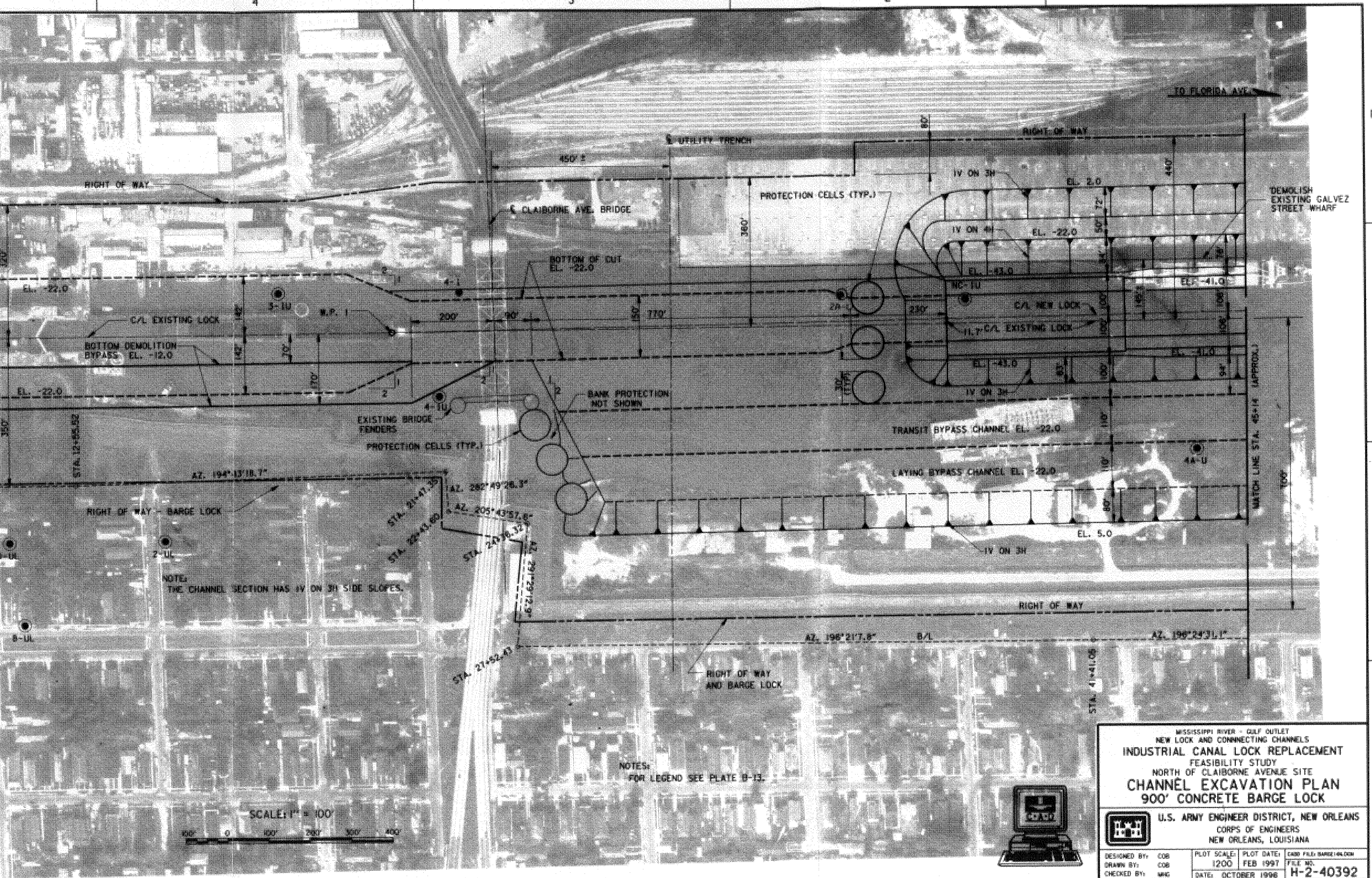

MISSISSIPPI RIVER - GULF OUTLET
NEW LOCK AND CONNECTING CHANNELS
INDUSTRIAL CANAL LOCK REPLACEMENT
FEASIBILITY STUDY
NORTH OF CLAIBORNE AVENUE SITE

CHANNEL EXCAVATION PLAN
900' CONCRETE BARGE LOCK

U.S. ARMY ENGINEER DISTRICT, NEW ORLEANS
CORPS OF ENGINEERS
NEW ORLEANS, LOUISIANA

DESIGNED BY: COB	PLOT SCALE: 1200	PLOT DATE: FEB 1997	CADD FILE: BARGE14N.DGN	
DRAWN BY: COB			FILE NO.	H-2-40392
CHECKED BY: MMG	DATE: OCTOBER 1996			

PLATE B-14N

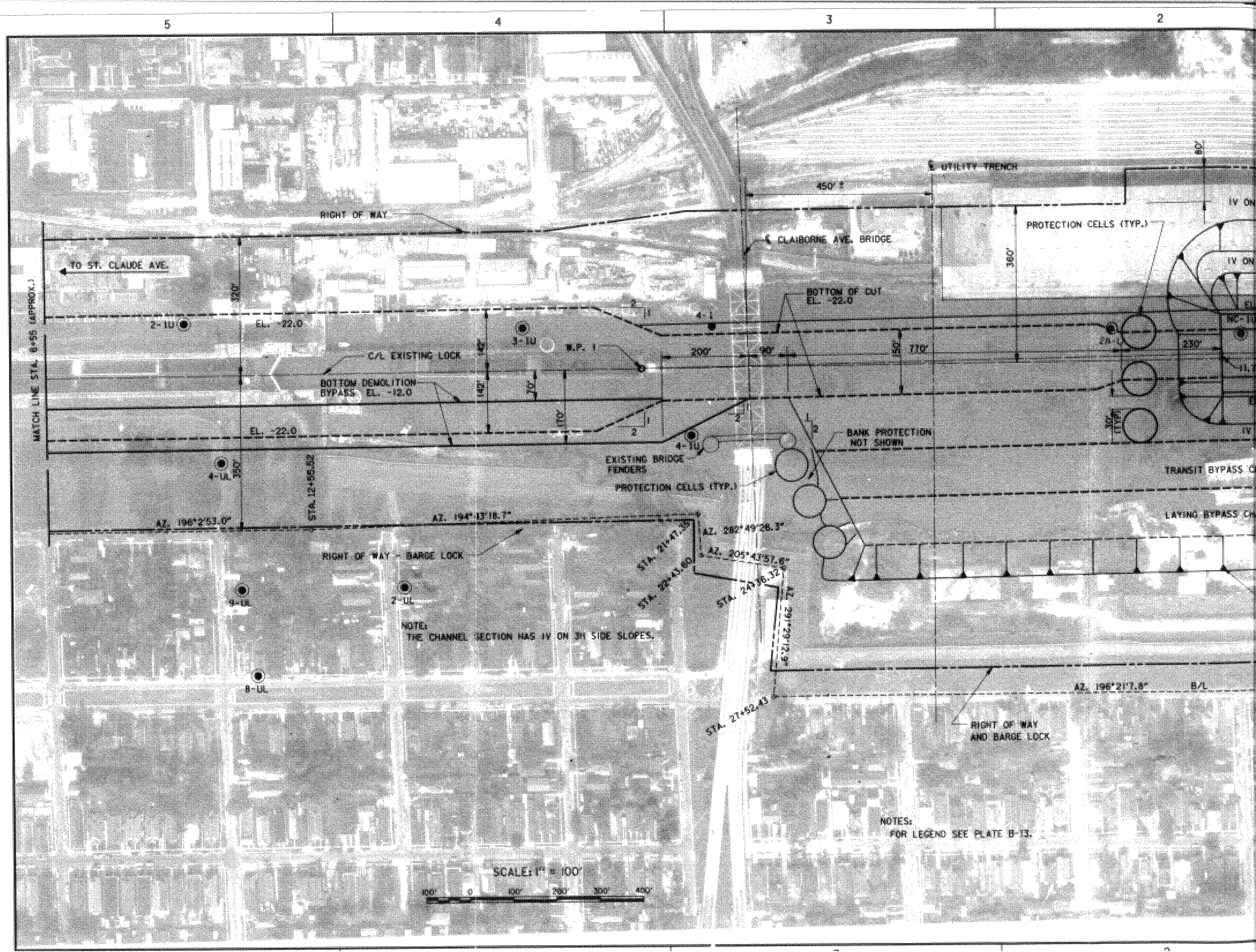

5
4
3
2
RIGHT OF WAY
TO ST. CLAUDE AVE.
MATCH LINE STA. 6+55 (APPROX.)
2-1U
EL. -22.0
3-1U
W.P. 1
C/L EXISTING LOCK
BOTTOM DEMOLITION BYPASS EL. -12.0
EL. -22.0
4-1U
4-UL
STA. 12+55.52
AZ. 196°2'53.0"
AZ. 194°13'18.7"
RIGHT OF WAY - BARGE LOCK
9-UL
2-UL
8-UL
NOTE:
THE CHANNEL SECTION HAS 1V ON 3H SIDE SLOPES.
℄ UTILITY TRENCH
450' ±
℄ CLAIBORNE AVE. BRIDGE
BOTTOM OF CUT EL. -22.0
PROTECTION CELLS (TYP.)
360'
200'
90'
150'
770'
230'
BANK PROTECTION NOT SHOWN
EXISTING BRIDGE FENDERS
PROTECTION CELLS (TYP.)
AZ. 282°49'26.3"
AZ. 205°43'57.6"
STA. 21+47.35
STA. 22+43.60
STA. 24+36.32
AZ. 291°29'12.9"
STA. 27+52.43
AZ. 196°21'7.8"
B/L
RIGHT OF WAY AND BARGE LOCK
TRANSIT BYPASS C
LAYING BYPASS CH
NOTES:
FOR LEGEND SEE PLATE B-13.
SCALE: 1" = 100'
100' 0 100' 200' 300' 400'

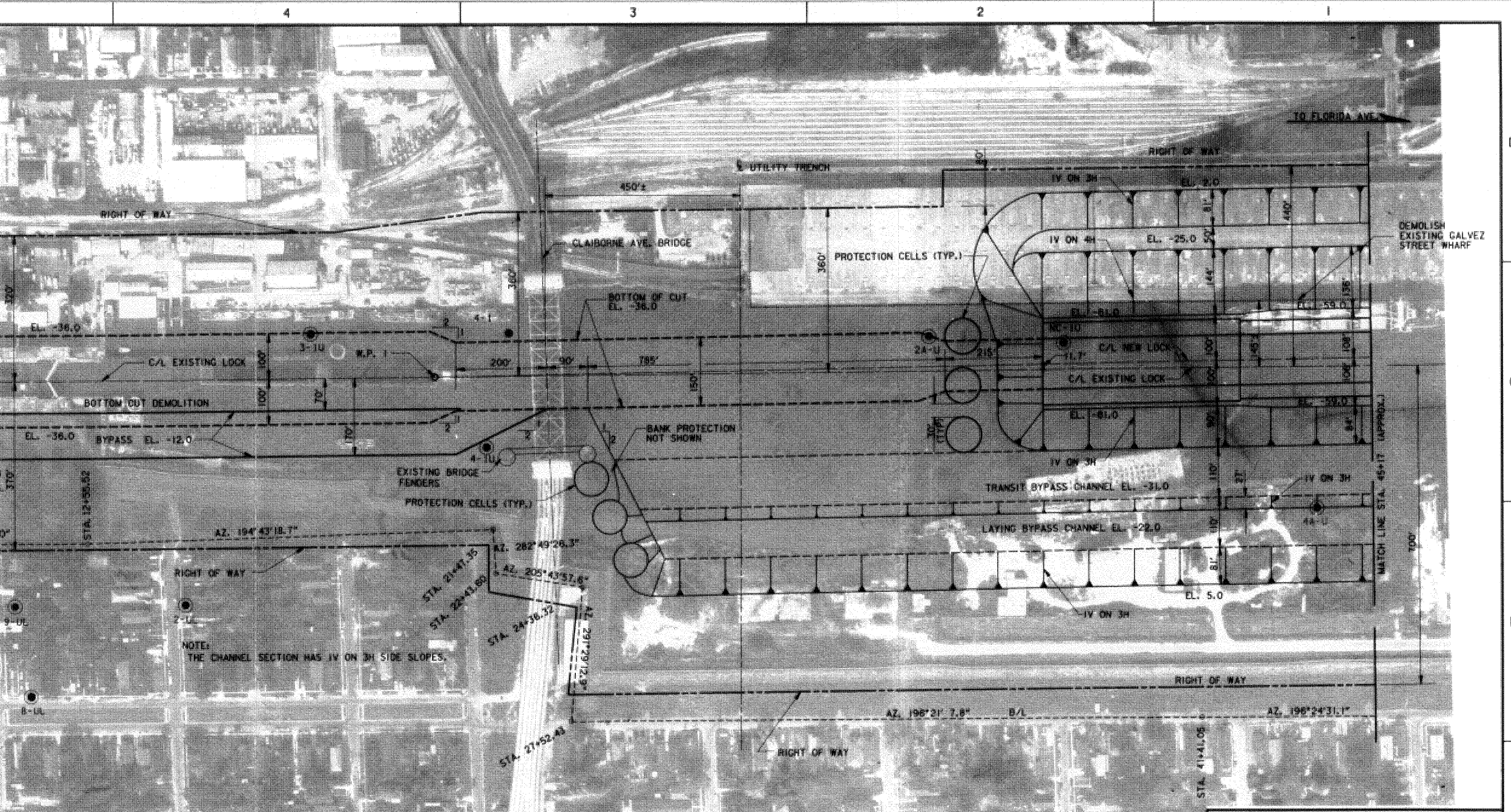

NOTES:
FOR LEGEND SEE PLATE B-13.

MISSISSIPPI RIVER - GULF OUTLET
NEW LOCK AND CONNECTING CHANNELS
INDUSTRIAL CANAL LOCK REPLACEMENT
FEASIBILITY STUDY
NORTH OF CLAIBORNE AVENUE SITE

CHANNEL EXCAVATION PLAN
1200' CONCRETE SHIP LOCK

U.S. ARMY ENGINEER DISTRICT, NEW ORLEANS
CORPS OF ENGINEERS
NEW ORLEANS, LOUISIANA

DESIGNED BY: COB		PLOT SCALE: 1200	PLOT DATE: FEB 1997	CADD FILE: PLATE14T.DGN
DRAWN BY: COB				FILE NO. H-2-40392
CHECKED BY: MMG		DATE: OCTOBER 1996		

PLATE B-14T

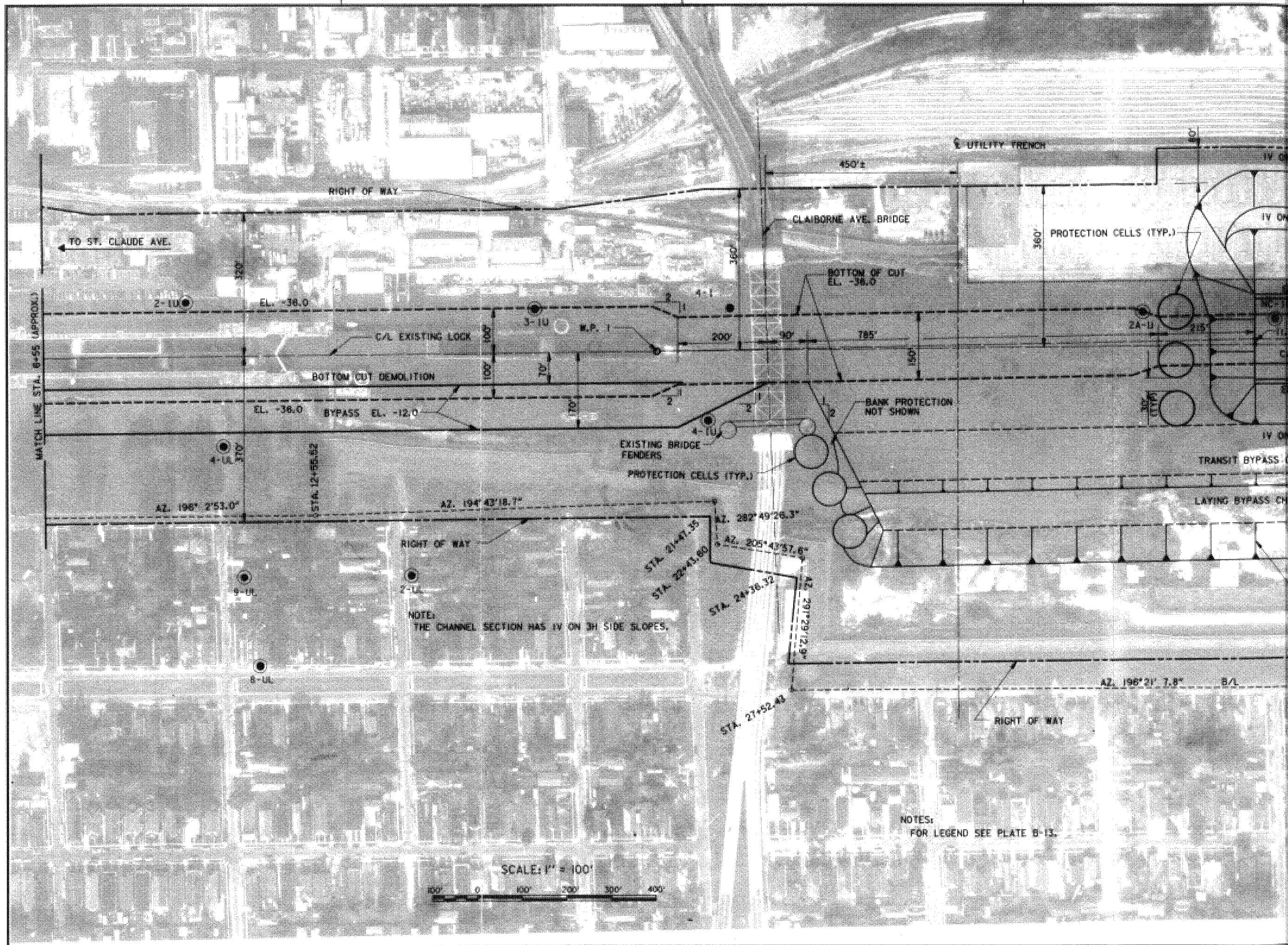
RIGHT OF WAY
TO ST. CLAUDE AVE.
MATCH LINE STA. 8+55 (APPROX.)
2-1U
EL. -38.0
3-1U
M.P. 1
C/L EXISTING LOCK
BOTTOM CUT DEMOLITION
EL. -38.0
BYPASS EL. -12.0
4-1L
4-1U
EXISTING BRIDGE FENDERS
PROTECTION CELLS (TYP.)
STA. 12+85.52
AZ. 198° 2'53.0"
AZ. 194°43'18.7"
RIGHT OF WAY
2-1L
8-1U
8-1L
NOTE:
THE CHANNEL SECTION HAS 1V ON 3H SIDE SLOPES.
STA. 21+41.35
STA. 22+41.80
STA. 24+36.32
AZ. 282°49'26.3"
AZ. 205°43'57.6"
STA. 27+52.42
450'±
℄ UTILITY TRENCH
CLAIBORNE AVE. BRIDGE
BOTTOM OF CUT EL. -38.0
PROTECTION CELLS (TYP.)
360'
200'
90'
785'
150'
2A-1U
BANK PROTECTION NOT SHOWN
TRANSIT BYPASS
LAYING BYPASS CH
AZ. 196°21' 7.8"
B/L
RIGHT OF WAY
NOTES:
FOR LEGEND SEE PLATE B-13.
SCALE: 1" = 100'
100' 0 100' 200' 300' 400'

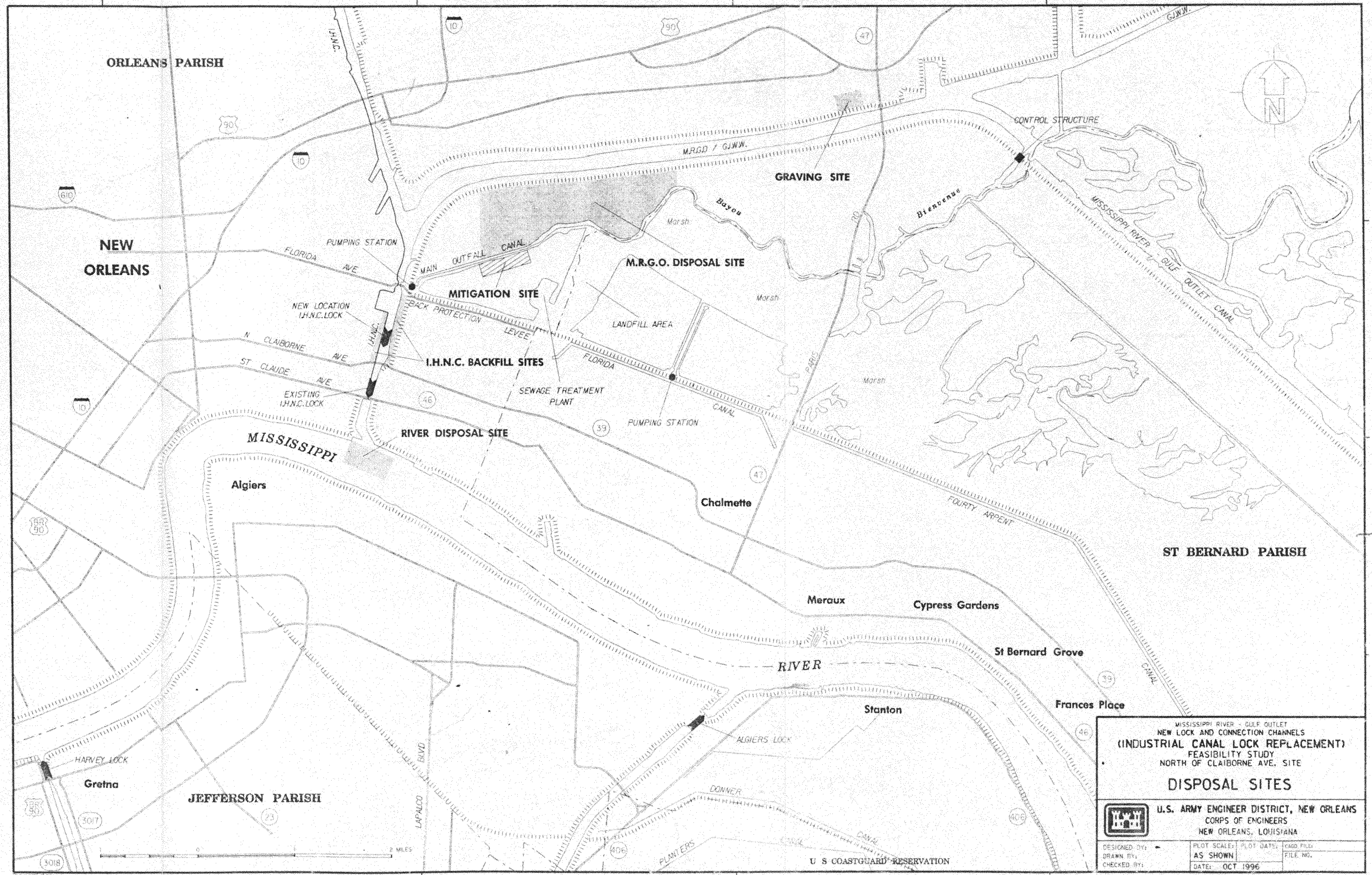
ORLEANS PARISH
NEW ORLEANS
I.H.N.C.
M.R.G.O. / G.I.W.W.
GRAVING SITE
CONTROL STRUCTURE
Bayou
Bienvenue
Marsh
MISSISSIPPI RIVER - GULF OUTLET CANAL
PUMPING STATION
FLORIDA AVE
MAIN OUTFALL CANAL
M.R.G.O. DISPOSAL SITE
MITIGATION SITE
NEW LOCATION I.H.N.C. LOCK
BACK PROTECTION LEVEE
LANDFILL AREA
N CLAIBORNE AVE
ST CLAUDE AVE
I.H.N.C. BACKFILL SITES
FLORIDA CANAL
EXISTING I.H.N.C. LOCK
SEWAGE TREATMENT PLANT
PUMPING STATION
RIVER DISPOSAL SITE
MISSISSIPPI
Algiers
Chalmette
FOURTY ARPENT
ST BERNARD PARISH
Meraux
Cypress Gardens
St Bernard Grove
RIVER
Frances Place
Stanton
ALGIERS LOCK
HARVEY LOCK
Gretna
JEFFERSON PARISH
LAPALCO BLVD
DONNER CANAL
PLANTERS CANAL
U S COASTGUARD RESERVATION
2 MILES
MISSISSIPPI RIVER - GULF OUTLET
NEW LOCK AND CONNECTION CHANNELS
(INDUSTRIAL CANAL LOCK REPLACEMENT)
FEASIBILITY STUDY
NORTH OF CLAIBORNE AVE. SITE
DISPOSAL SITES
U.S. ARMY ENGINEER DISTRICT, NEW ORLEANS
CORPS OF ENGINEERS
NEW ORLEANS, LOUISIANA
DESIGNED BY:
DRAWN BY:
CHECKED BY:
PLOT SCALE: AS SHOWN
PLOT DATE:
CADD FILE:
FILE NO.
DATE: OCT 1996

PLATE 15A

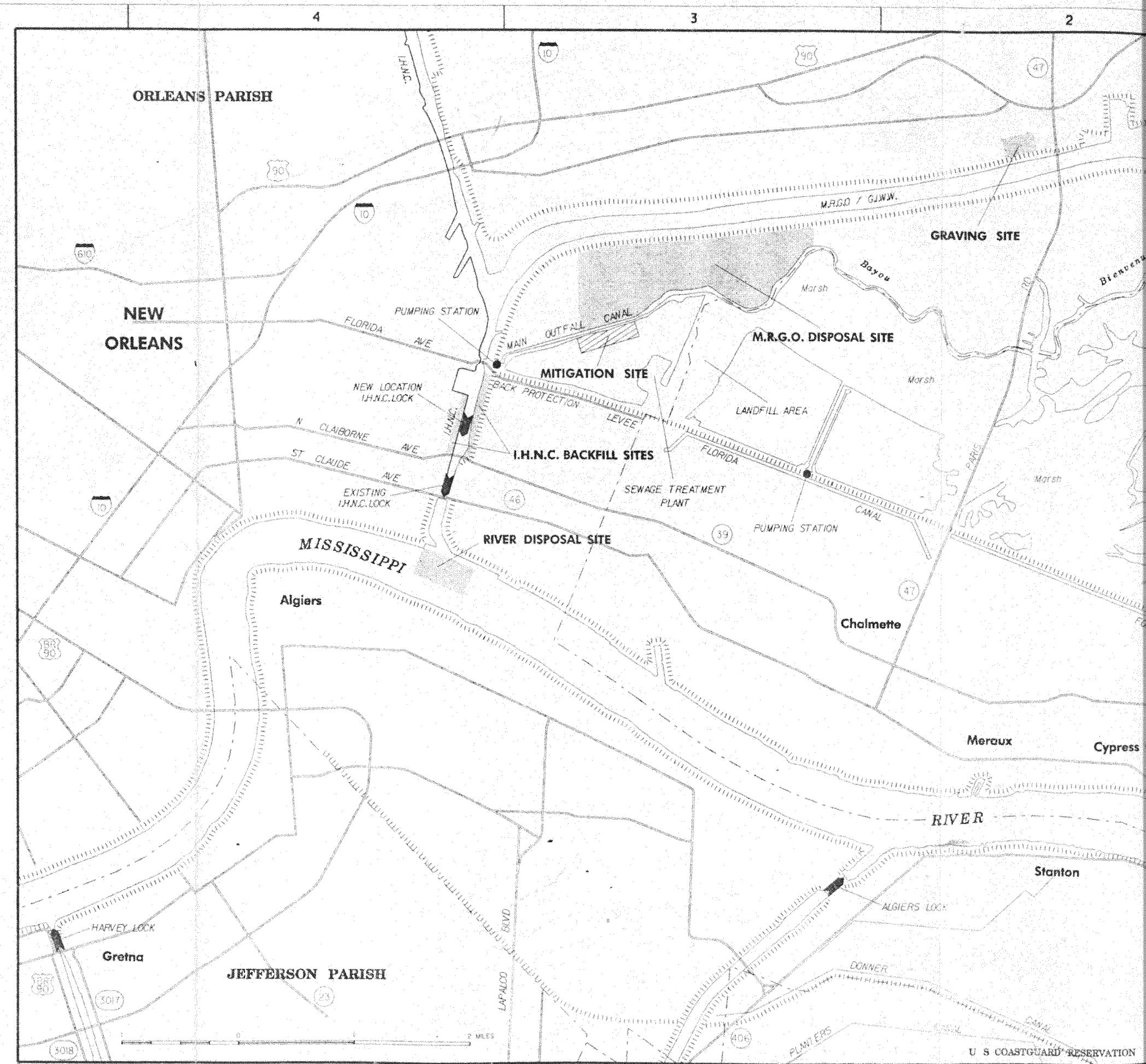
4
3
2
ORLEANS PARISH
I.H.N.C.
M.R.G.O. / G.I.W.W.
GRAVING SITE
Bayou
Marsh
NEW ORLEANS
PUMPING STATION
FLORIDA AVE
MAIN OUTFALL CANAL
M.R.G.O. DISPOSAL SITE
MITIGATION SITE
NEW LOCATION I.H.N.C. LOCK
BACK PROTECTION LEVEE
LANDFILL AREA
N CLAIBORNE AVE
I.H.N.C.
I.H.N.C. BACKFILL SITES
ST CLAUDE AVE
EXISTING I.H.N.C. LOCK
SEWAGE TREATMENT PLANT
FLORIDA
CANAL
PUMPING STATION
RIVER DISPOSAL SITE
MISSISSIPPI
Algiers
Chalmette
Meraux
Cypress
RIVER
Stanton
ALGIERS LOCK
HARVEY LOCK
Gretna
JEFFERSON PARISH
LAPALCO BLVD
DONNER CANAL
PLANTERS CANAL
U S COASTGUARD RESERVATION
0 1 2 MILES

DESIGNED BY: MRC	PLOT SCALE: 100	PLOT DATE: FEB 1997	CADD FILE: 9400SHEL.DGN
DRAWN BY: TWH			FILE NO. H-2-40392
CHECKED BY: MRC	DATE: OCTOBER 1996		

U.S. ARMY ENGINEER DISTRICT, NEW ORLEANS
CORPS OF ENGINEERS
NEW ORLEANS, LOUISIANA

CHANNEL EXCAVATION PLAN
900' CONCRETE BARGE LOCK

INDUSTRIAL CANAL LOCK REPLACEMENT
FESIBILITY STUDY
NORTH OF CLAIBORNE AVENUE SITE

MISSISSIPPI RIVER - GULF OUTLET
NEW LOCK AND CONNECTING CHANNELS

SCALE: 1" = 100'

NOTE:
FOR LEGEND SEE PLATE D-13.

NOTE:
SEE CHANNEL SECTION MAS 1V ON 3H SIDE SLOPES

MATCH LINE STA. 89+01 (APPROX.)

TOWER #32

STA. 10+50.66

STA. 34+31.26

AZ. 195°33'43"

CAL MEN FLORIDA AVE. BR.

CAL EXISTING FLA. AVE. BR.

RIGHT OF WAY

AZ. 196°15'41.9"

STA. 84+51.60

TOWER #31

STA. 80+48.60

CAL NEW LOCK

CAL EXISTING LOCK

BOTTOM CUT BARGE LOCK EL. -22.0

BOTTOM CUT BARGE LOCK EL. -22.0

UTILITY TRENCH

600'±

300'

300'

300'

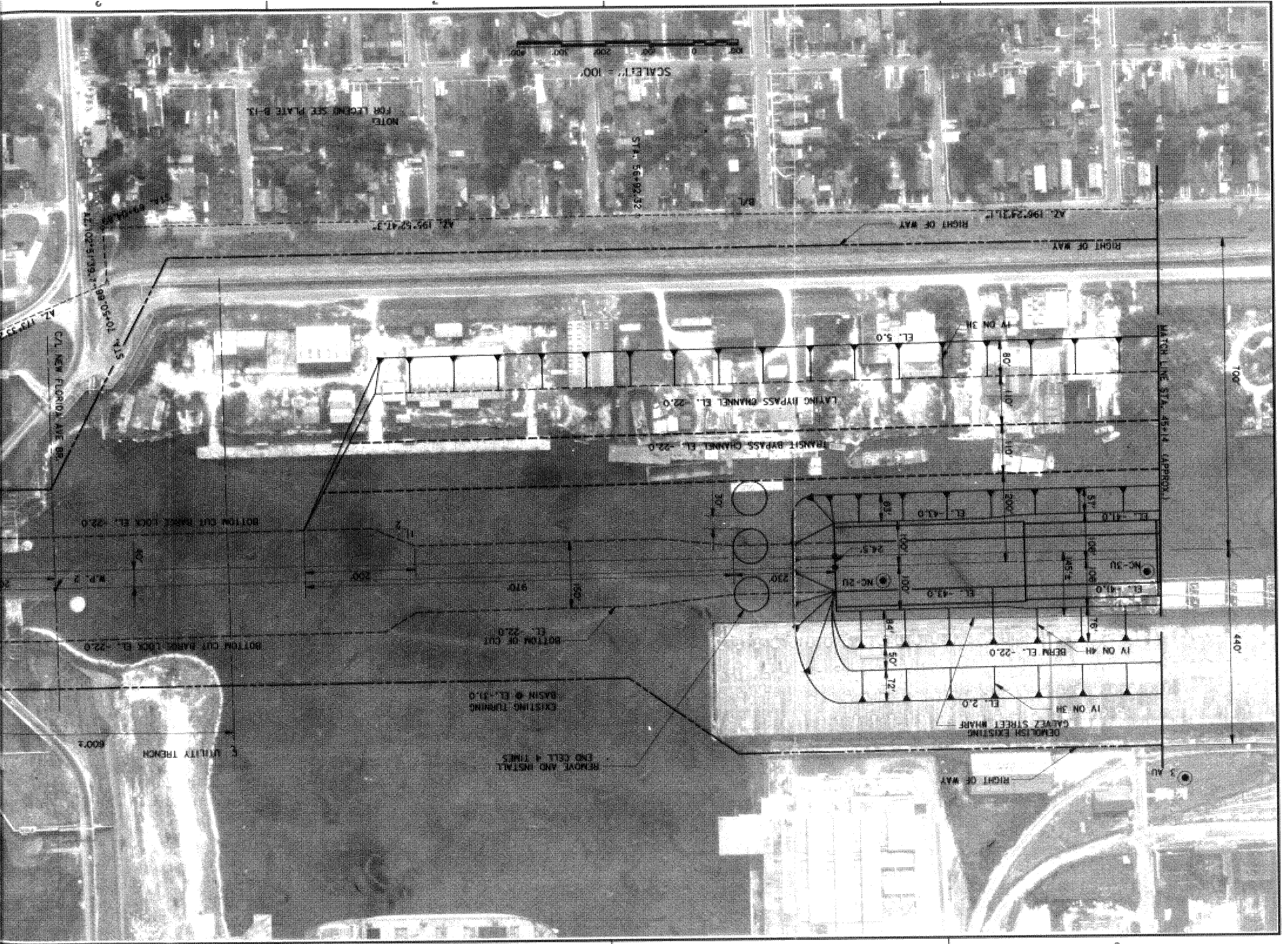
SCALE: 1" = 100'
NOTE:
FOR LEGEND SEE PLATE B-13.
RIGHT OF WAY
RIGHT OF WAY
MATCH LINE STA. 45+14 (APPROX.)
LAYING BYPASS CHANNEL EL. -22.0
TRANSIT BYPASS CHANNEL EL. -22.0
BOTTOM CUT BARGE LOCK EL. -22.0
BOTTOM CUT BARGE LOCK EL. -22.0
BOTTOM OF CUT EL. -22.0
EXISTING TURNING BASIN @ EL. -31.0
REMOVE AND INSTALL END CELL 4 TIMES
DEMOLISH EXISTING GALVEZ STREET WHARF
BERM EL. -22.0
1V ON 4H
1V ON 3H
EL. 5.0
EL. 2.0
NC-2U
NC-3U
3 AU
C/L NEW FLORIDA AVE. BR.
UTILITY TRENCH
700'
440'
600'±

4 3 2 1

D C B A

RIGHT OF WAY

DEMOLISH EXISTING GALVEZ STREET WHARF

REMOVE AND INSTALL END CELL 4 TIMES

EXISTING TURNING BASIN @ EL. -31.0

EL. 2.0

BERM EL. -25.0

81'

50'

144'

115'

230'

985'

EL. 8.0

@ NC-20

27.0

200'

200'

BOTTOM OF CUT EL. -36.0

EL. -6.0

IV ON 3H

TRANSIT BYPASS CHANNEL EL. -31.0

IV ON 3H

LAYING BYPASS CHANNEL EL. -32.0

IV ON 3H

EL. 5.0

IV ON 3H

RIGHT OF WAY

N29°24'31.1"E

B/L

AZ. 195°52'47.3"

STA. 80+60.00

NOTE:
FOR LEGEND SEE PLATE B-13.

SCALE: 1" = 100'

0 100' 200' 300' 400'

℄ UTILITY TRENCH

600'±

TOWER #31

STA. 84+51.83

AZ. 196°15'47.9"

AZ. 196°15'47.9"

STA. 80+60.00

RIGHT OF WAY

BOTTOM CUT SHIP LOCK EL. -36.0

200'

C/L NEW LOCK

C/L EXISTING LOCK

W.P. 2

BOTTOM CUT SHIP LOCK EL. -36.0

RIGHT OF WAY

NOTE:
THE CHANNEL SECTION HAS IV ON 3H SIDE SLOPES

C/L NEW FLOODWALL

C/L EXISTING FLOODWALL

STA. 74+37.26

AZ. 195°52'47.3"

STA. 70+50.00

TOWER #32

MISSISSIPPI RIVER - GULF OUTLET
NEW LOCK AND CONNECTING CHANNELS
INDUSTRIAL CANAL LOCK REPLACEMENT
FESIBILITY STUDY
NORTH OF CLAIBORNE AVENUE SITE

CHANNEL EXCAVATION PLAN
1200' CONCRETE SHIP LOCK

U.S. ARMY ENGINEER DISTRICT, NEW ORLEANS
CORPS OF ENGINEERS
NEW ORLEANS, LOUISIANA

DESIGNED BY: MHG		PLOT SCALE: 1200	PLOT DATE: FEB 1997	CADD FILE: PLATE13T.DGN
DRAWN BY: TWU				FILE NO. H-2-40392
CHECKED BY: MHG		DATE: OCTOBER 1996		

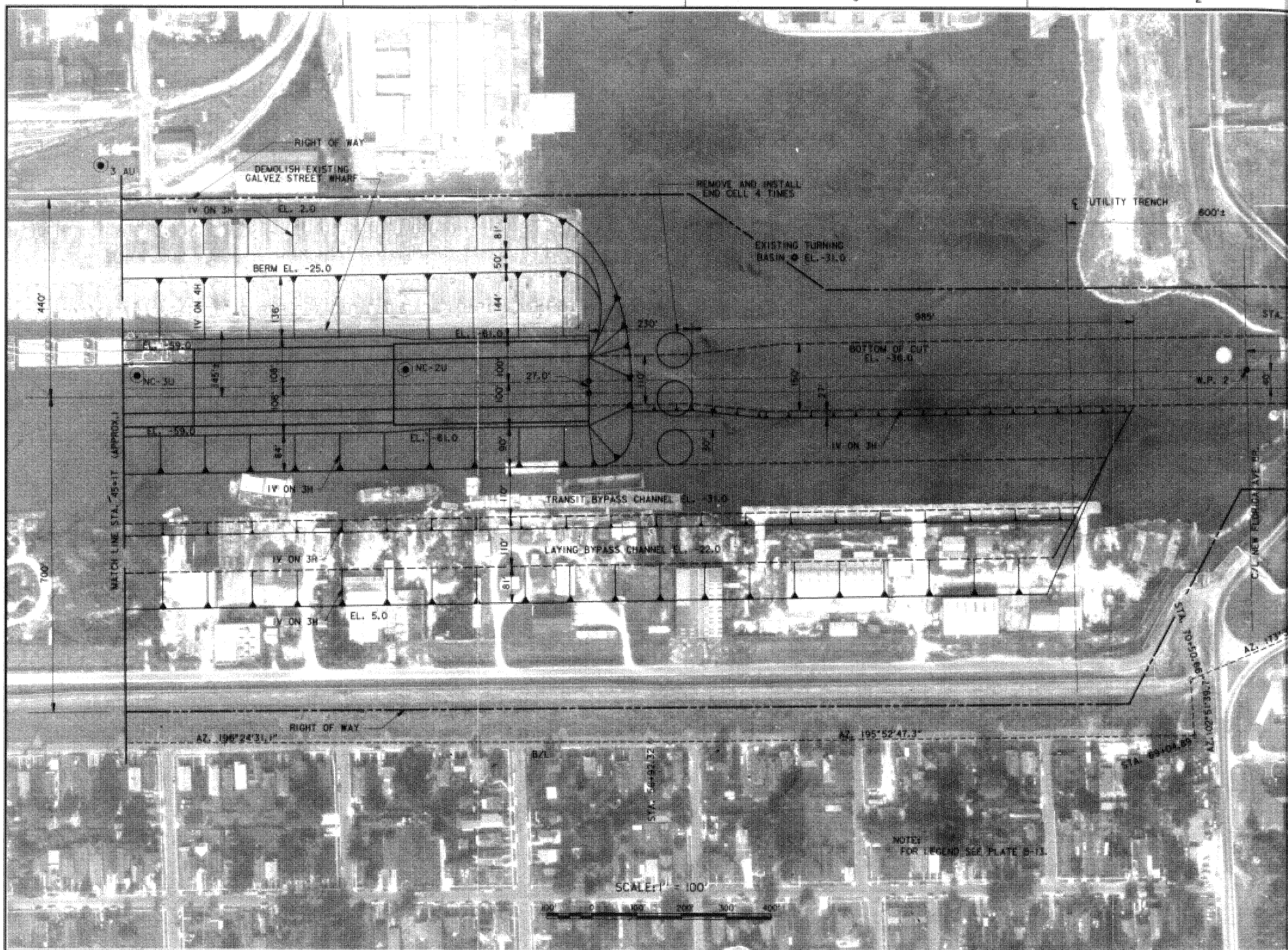

RIGHT OF WAY
DEMOLISH EXISTING GALVEZ STREET WHARF
REMOVE AND INSTALL END CELL 4 TIMES
EXISTING TURNING BASIN @ EL. -31.0
℄ UTILITY TRENCH
800'±
1V ON 3H
EL. 2.0
BERM EL. -25.0
1V ON 4H
EL. -59.0
EL. -61.0
NC-3U
NC-2U
27.0'
230'
985'
BOTTOM OF CUT EL. -38.0
W.P. 2
1V ON 3H
TRANSIT BYPASS CHANNEL EL. -31.0
LAYING BYPASS CHANNEL EL. -22.0
1V ON 3H
EL. 5.0
MATCH LINE STA. 45+17 (APPROX.)
440'
700'
RIGHT OF WAY
AZ. 196°24'31.1"
AZ. 195°52'47.3"
B/L
STA. 70+50.66
STA. 69+04.89
NOTE: FOR LEGEND SEE PLATE B-13.
SCALE: 1" = 100'

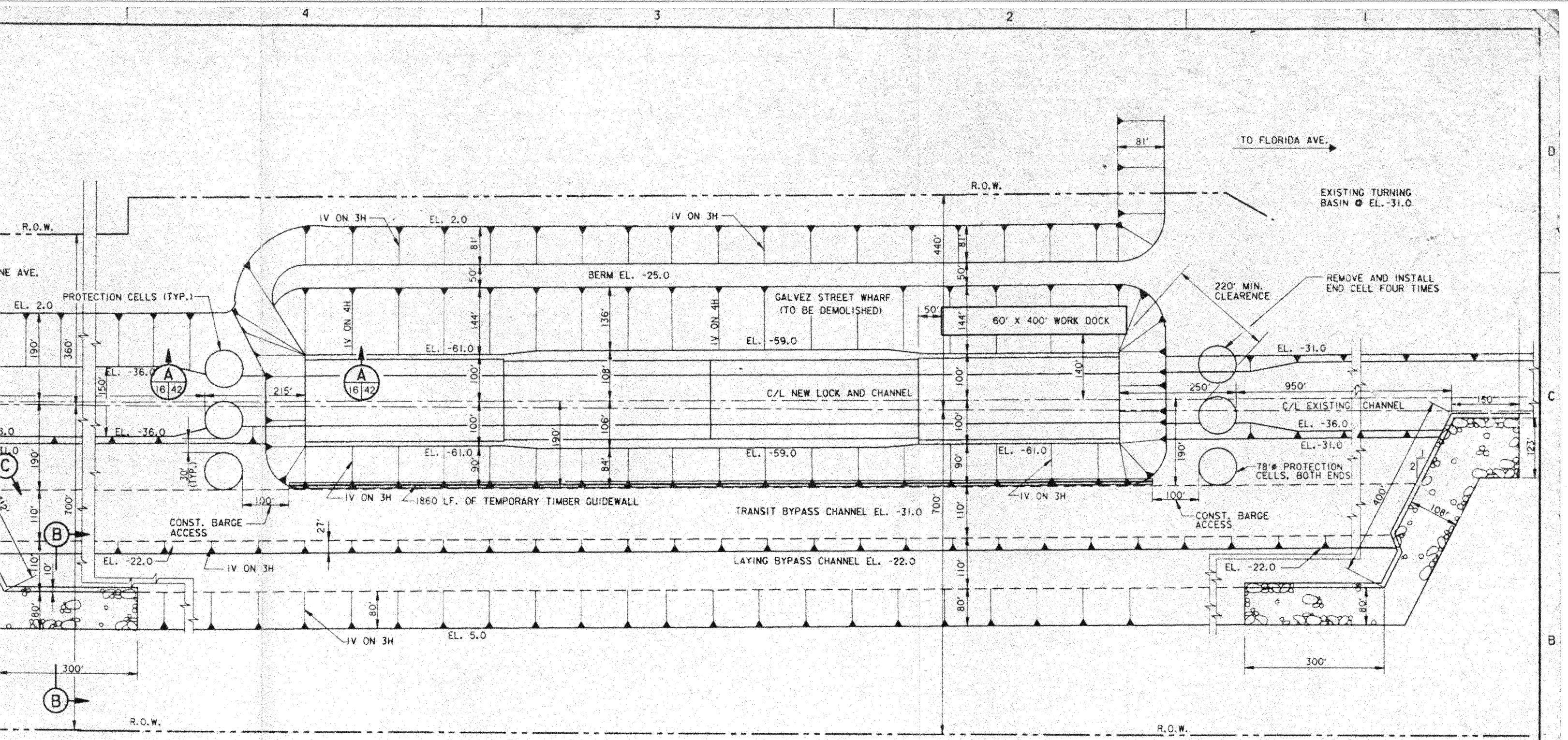

PLAN

SCALE: 1"=100'-0"

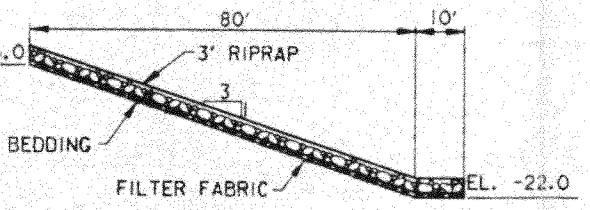

SECTION (B)

SCALE: 1"=20'-0"

RIPRAP GRADATION

% LIGHTER BY WEIGHT	WEIGHT (LBS)
100	2200 - 900
50	930 - 440
15	460 - 130

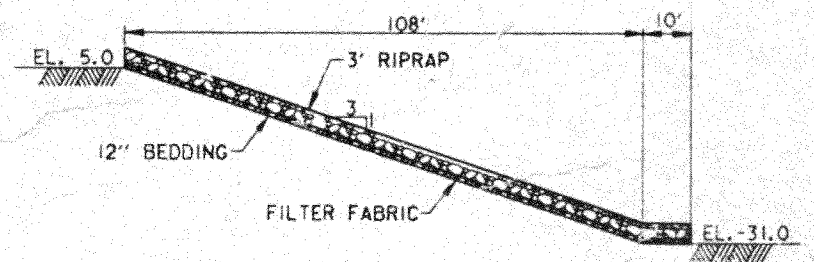

SECTION (C)

SCALE: 1"=20'-0"

SCALE: 1" = 20'

SCALE: 1" = 100'

MISSISSIPPI RIVER - GULF OUTLET
NEW LOCK AND CONNECTING CHANNELS
INDUSTRIAL CANAL LOCK REPLACEMENT
FEASIBILITY STUDY
NORTH OF CLAIBORNE AVENUE SITE

EXCAVATION PLAN
1200' CONCRETE SHIP LOCK

U.S. ARMY ENGINEER DISTRICT, NEW ORLEANS
CORPS OF ENGINEERS
NEW ORLEANS, LOUISIANA

DESIGNED BY: MHG	PLOT SCALE: 1200	PLOT DATE: SEPT 1996	CADD FILE: PLATB16.DGN	
DRAWN BY: TMU			FILE NO. H-2-40392	
CHECKED BY: MHG	DATE: OCTOBER 1996			

PLATE B-16

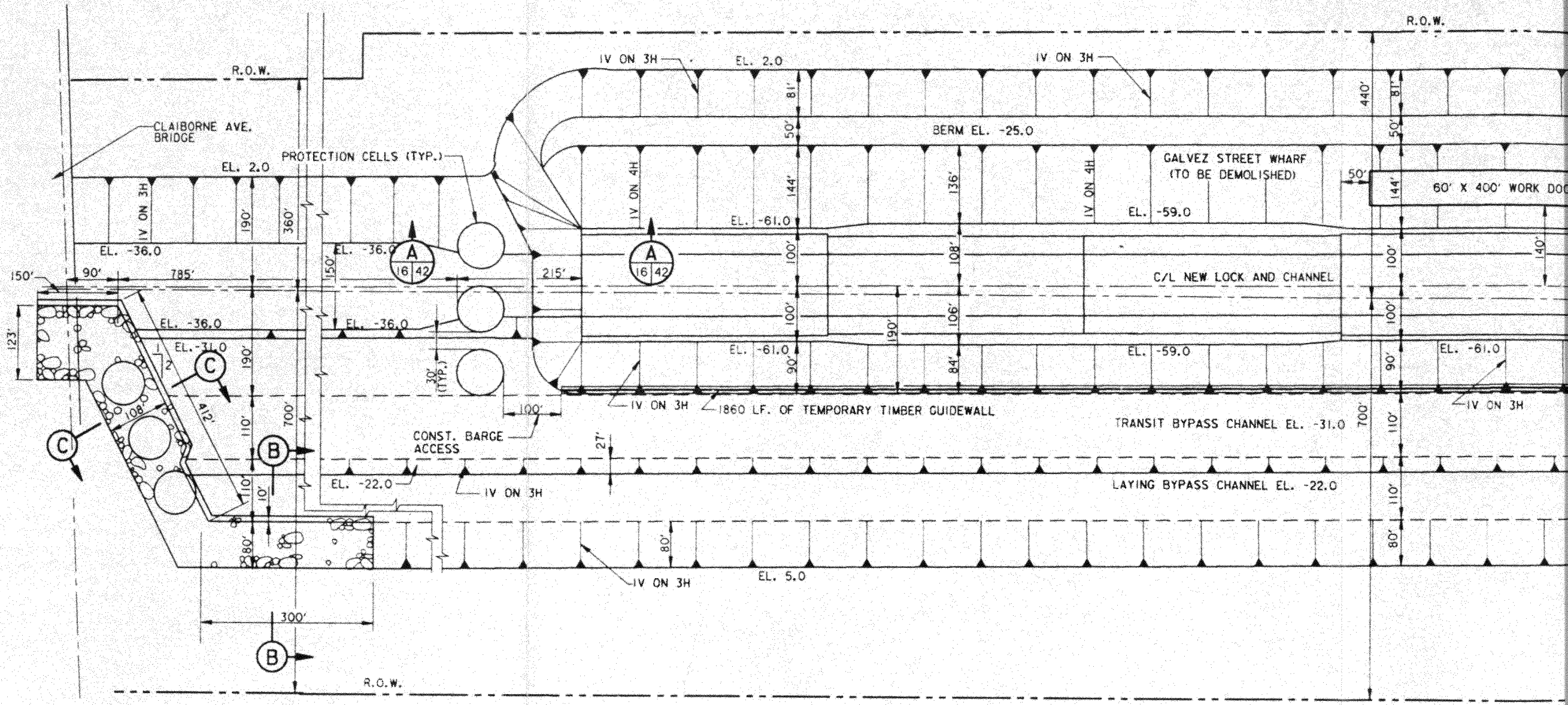

PLAN

SCALE: 1"=100'-0"

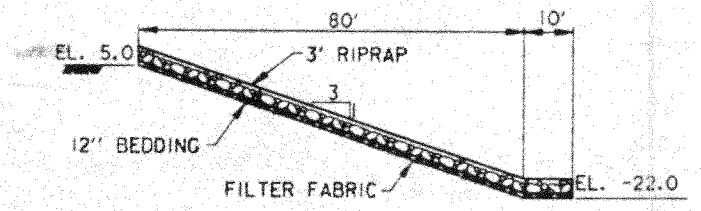

SECTION (B)

SCALE: 1"=20'-0"

RIPRAP GRADATION

% LIGHTER BY WEIGHT	WEIGHT (LBS)
100	2200 - 900
50	930 - 440
15	460 - 130

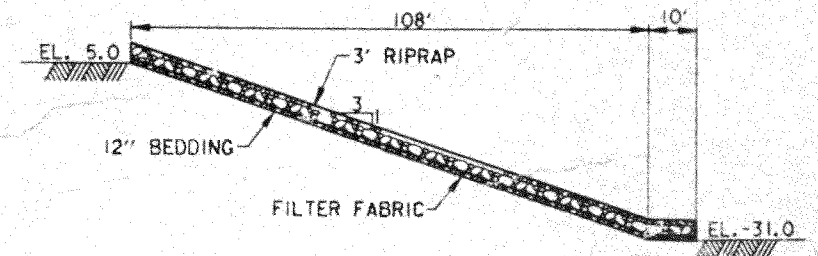

SECTION (C)

SCALE: 1"=20'-0"

SCALE:

SCALE:

RIVER FLOOD PROTECTION

NO FLOOD PROTECTION REQ'D.

EXISTING FLOODWALL TO BE REMOVED

LEVEE/I-WALL
LEVEE CROWN EL. 18.0
TOP WALL EL. 22.4

1V ON 3H

EL. 2.0

40' BERM

EL. 2.0±

1V ON 3H

EL. -36.0

1200' FLOATING GUIDEWALL

TS AS A FENDER SYSTEM
IDGE PIER.

EL. -31

1V ON 3H

EL. -22.0

1V ON 3H

1V ON 3H

EL. 5.0

R.O.W. SHIP LOCK

EXISTING FLOOD WALL
TO BE REMOVED

LEVEE/I-WALL
LEVEE CROWN EL. 18.0
TOP WALL EL. 22.4

R.O.W.

EL. 3.0

ROAD
EL. 15.0

PARKING

PAINT SHED

1V ON 3H

50' x 75'
PRE-FABRICATED
MAINTENANCE &
ADMINISTRATION BLDG.

1V ON 10H

EL. 2.0

164'

PEDESTAL CRANE

EMER. BULKHEAD
STORAGE (110'X60')

25'x45' MACHINERY BLDG.
W/EMERGENCY GENERATORS

EL. 10.0

SHEET PILING CUTOFF

2'

100' RIPRAP

TOP OF WALL
EL. 22.4

CONTROL HOUSE 20' X 20'

FLOOR EL. -40.0

℄ NEW LOCK
1270' C/L PINTLE
1200' USABLE LENGTH

110'

EL. 10.0

CONTROL HOUSE 15' X 15'

EL. 5.0

ONE LANE, PRECAST CONCRETE
ACCESS RAMPS, PILE FOUNDED BENTS
@ 19' O.C. (4 SPANS REQ'D PER RAMP)

RIPRAP

1V ON 4H

50' BERM EL. 5.0

EL. 5.0

TIE-IN LEVEE
LEVEE CROWN, EL. 15.0
TOP FLOOD WALL, EL. 22.4

EL. 15.0

GATED ACCESS
ROAD

LEVEE/I-WALL
LEVEE CROWN EL. 18.0
TOP WALL EL. 22.4

EXISTING FLOOD WALL
TO BE REMOVED

EXIST. FLOODWALL
TIE-IN

EXIST. HURRICANE
PROTECTION

HURRICANE
PROTECTION CONTINUES
AROUND INLAND PORT

10'

18' WIDE ASPHALTIC
TWO LANE ROAD
WITH 24' BASE

EL. 3.0

EXISTING FLOODWALL
TO BE REMOVED AFTER
LAKE SIDE TIE-IN LEVEES
ARE COMPLETE.

LEVEE CROWN ROAD
EL. 8.0

CONTROL HOUSE 20' X 20'

1V ON 10H

CONTROL HOUSE 15' X 15'

TIE-IN LEVEE/I-WALL
LEVEE CROWN EL. 8.0
TOP WALL EL. 14.0

EL. 5.0

GATE ASSESS
ROAD

EXISTING FLOODWALL
TO BE REMOVED AFTER
LAKE SIDE TIE-IN LEVEES
ARE COMPLETE.

TIE-IN LEVEE/I-WALL
LEVEE CROWN EL. 8.0
TOP WALL EL. 14.0

50' BERM, EL. 2.0

1V ON 4H

EL. -30.0

RIPRAP

SHEET PILING CUTOFF

100' RIP RAP

BOTTOM OF CUT
EL. -36.0

800' TIMBER GUIDEWALL

75'

75'

300'

490'

110'

1V ON 4H

EL. -31.0

1V ON 3H

EL. -22.0

1V ON 3H

EL. 5.0

EXISTING FLOODWALL
TIE-IN

EXISTING LEVEE/I-WALL
LEVEE CROWN EL. 8.0
TOP WALL EL. 14.0

EXISTING HURRICANE PROTECTION
TO REMAIN

CONTROL HOUSES
(2 20' X 20' AND 2 15' X 15')
20'X20' ONE STORY REINFORCED MASONRY BLDG. WITH METAL ROOF SUPPORTED ON OPEN WEB JOISTS. CONTROL HOUSE SHALL INCLUDE STORAGE AREA & RESTROOM FACILITIES.
15X15 ONE STORY MASONRY BLDG. WITHOUT STORAGE AND RESTROOM FACILITIES; LOCK CONTROLS ONLY.

MAINTENANCE & ADMINISTRATION BLDG.

TWO STORY 50'X75' PRE-FABRICATED RIGID STEEL FRAME ON A TIMBER PILE FOUNDED 8" SLAB. GABLE ROOF SHALL BE SUPPORTED BY PURLINS; WALL ENCLOSURES SHALL BE INSULATED 22 GUAGE METAL PANELS. FIRST FLOOR 14'; 2ND FLR 8'.

MACHINERY BUILDING WITH EMERGENCY GENERATORS

25'X45' CLEAR SPAN MACHINERY BUILDING WHICH INCLUDES EMERGENCY GENERATORS. BLDG. SHALL BE REINFORCED MASONRY LOCATED ON LOCK WALL. METAL ROOF SUPPORTED ON OPEN WEB JOISTS. ONE STORY, 14' CEILING.

RIVER SIDE

2' CAPPED F/W

EL. 22.4

15'

EL. 15.0

EL. 12.5

50' BERM

3

1

EL. 5.0

PZ-22
(LEN.=35')

TIP EL. -20.0

EL. 5.0

SECTION (E)
SCALE: 1"=10'

PLAN
SCALE: 1"=100'

SCALE: 1" = 10'

10' 0 10' 20' 30' 40'

SCALE: 1" = 100'

100' 0 100' 200' 300' 400'

15'

2' CAPPED F/W

EL. 14.0

LAKE SIDE

50' BERM

EL. 5.0

3

EL. 8.0

EL. 5.5

3

1

EL. 5.0

4

1

PZ-22
(LEN.=23')

TIP EL. -15.0

SECTION (D)
SCALE: 1"=10'

MISSISSIPPI RIVER - GULF OUTLET
NEW LOCK AND CONNECTING CHANNELS
INDUSTRIAL CANAL LOCK REPLACEMENT
FEASIBILITY STUDY
NORTH OF CLAIBORNE AVENUE SITE

PLAN
1200' CONCRETE SHIP LOCK

U.S. ARMY ENGINEER DISTRICT, NEW ORLEANS
CORPS OF ENGINEERS
NEW ORLEANS, LOUISIANA

DESIGNED BY: MHG	PLOT SCALE: 1200	PLOT DATE: JULY 1996	CADD FILE: PLATB17.dgn
DRAWN BY: TMJ			FILE NO. H-2-40392
CHECKED BY: MHG		DATE: OCTOBER 1996	

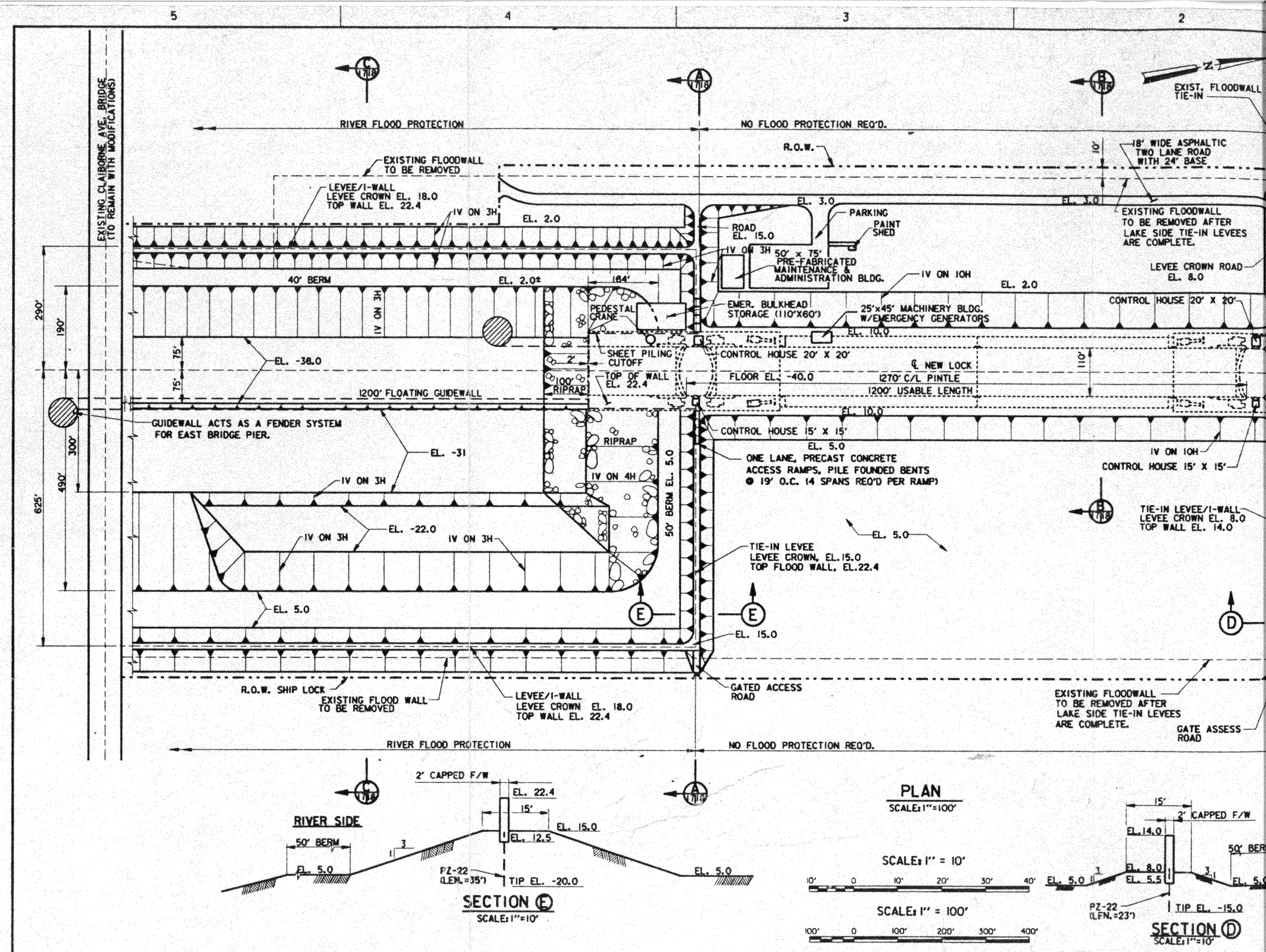
5
4
3
2
RIVER FLOOD PROTECTION
NO FLOOD PROTECTION REQ'D.
EXISTING CLAIBORNE AVE. BRIDGE (TO REMAIN WITH MODIFICATIONS)
EXISTING FLOODWALL TO BE REMOVED
LEVEE/I-WALL LEVEE CROWN EL. 18.0 TOP WALL EL. 22.4
1V ON 3H
EL. 2.0
40' BERM
EL. 2.0±
164'
PEDESTAL CRANE
SHEET PILING CUTOFF
2'
100' RIPRAP
TOP OF WALL EL. 22.4
EL. -36.0
1200' FLOATING GUIDEWALL
GUIDEWALL ACTS AS A FENDER SYSTEM FOR EAST BRIDGE PIER.
EL. -31
1V ON 3H
EL. -22.0
1V ON 3H
1V ON 3H
EL. 5.0
RIPRAP
1V ON 4H
50' BERM EL. 5.0
290'
190'
75'
75'
300'
490'
625'
R.O.W.
EL. 3.0
PARKING
PAINT SHED
ROAD EL. 15.0
1V ON 3H
50' x 75' PRE-FABRICATED MAINTENANCE & ADMINISTRATION BLDG.
1V ON 10H
EL. 2.0
EMER. BULKHEAD STORAGE (110'X60')
25'x45' MACHINERY BLDG. W/EMERGENCY GENERATORS
EL. 10.0
CONTROL HOUSE 20' X 20'
℄ NEW LOCK
1270' C/L PINTLE
1200' USABLE LENGTH
FLOOR EL. -40.0
110'
EL. 10.0
CONTROL HOUSE 15' X 15'
EL. 5.0
ONE LANE, PRECAST CONCRETE ACCESS RAMPS, PILE FOUNDED BENTS @ 19' O.C. (4 SPANS REQ'D PER RAMP)
EL. 5.0
TIE-IN LEVEE LEVEE CROWN, EL. 15.0 TOP FLOOD WALL, EL. 22.4
EL. 15.0
GATED ACCESS ROAD
R.O.W. SHIP LOCK
EXISTING FLOOD WALL TO BE REMOVED
LEVEE/I-WALL LEVEE CROWN EL. 18.0 TOP WALL EL. 22.4
EXIST. FLOODWALL TIE-IN
10'
18' WIDE ASPHALTIC TWO LANE ROAD WITH 24' BASE
EXISTING FLOODWALL TO BE REMOVED AFTER LAKE SIDE TIE-IN LEVEES ARE COMPLETE.
LEVEE CROWN ROAD EL. 8.0
CONTROL HOUSE 20' X 20'
1V ON 10H
CONTROL HOUSE 15' X 15'
TIE-IN LEVEE/I-WALL LEVEE CROWN EL. 8.0 TOP WALL EL. 14.0
EXISTING FLOODWALL TO BE REMOVED AFTER LAKE SIDE TIE-IN LEVEES ARE COMPLETE.
GATE ASSESS ROAD
RIVER FLOOD PROTECTION
NO FLOOD PROTECTION REQ'D.
RIVER SIDE
2' CAPPED F/W
EL. 22.4
15'
EL. 15.0
EL. 12.5
50' BERM
EL. 5.0
3
1
PZ-22 (LEN.=35')
TIP EL. -20.0
EL. 5.0
SECTION E
SCALE: 1"=10'
PLAN
SCALE: 1"=100'
SCALE: 1" = 10'
10' 0 10' 20' 30' 40'
SCALE: 1" = 100'
100' 0 100' 200' 300' 400'
15'
2' CAPPED F/W
EL. 14.0
EL. 8.0
EL. 5.5
EL. 5.0
3
1
PZ-22 (LEN.=23')
TIP EL. -15.0
SECTION D
SCALE: 1"=10'

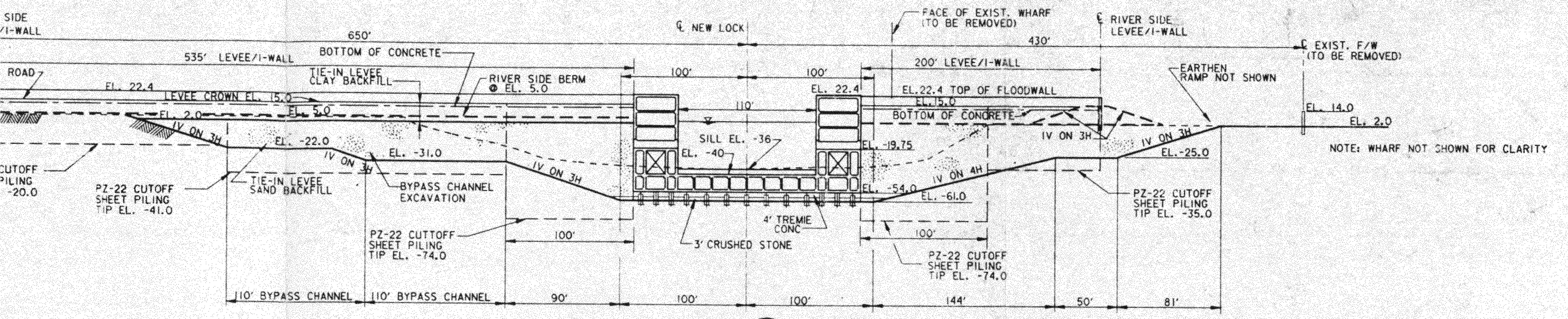

SECTION A 17 18

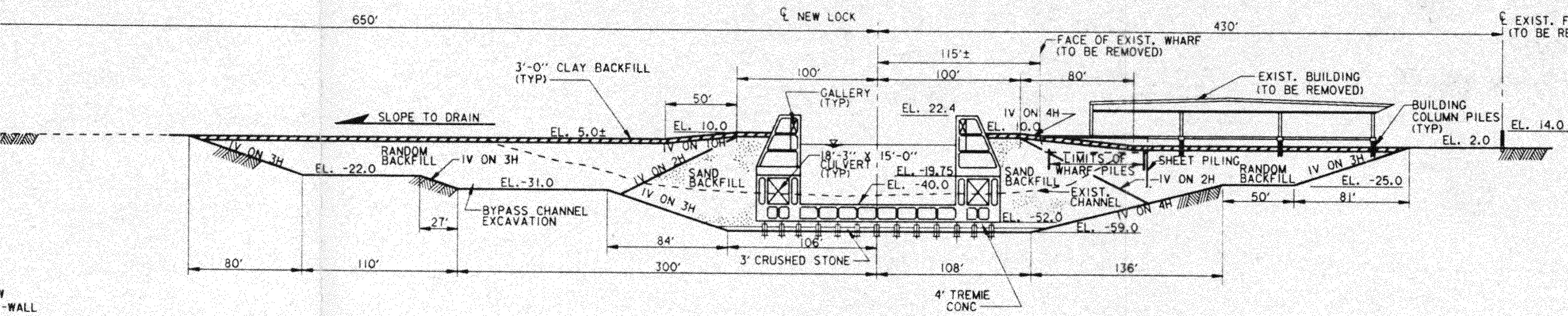

SECTION B 17 18

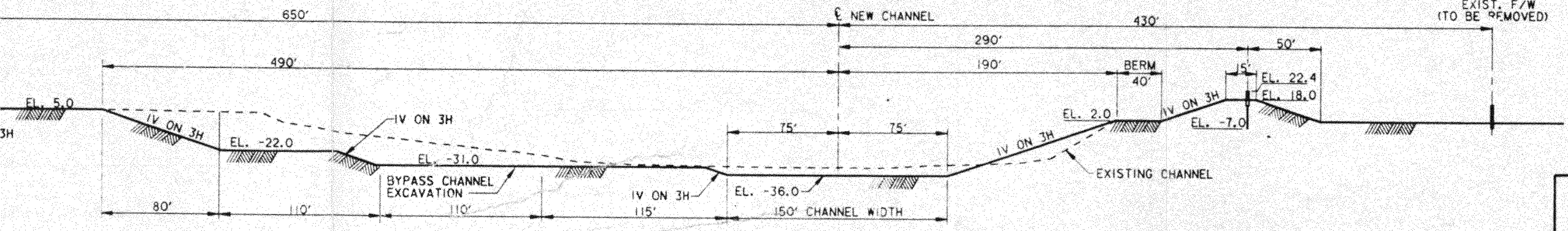

SECTION C 17 18

SCALE: 1" = 40'

40' 0 40' 80' 120' 160'

MISSISSIPPI RIVER - GULF OUTLET
NEW LOCK AND CONNECTION CHANNELS
INDUSTRIAL CANAL LOCK REPLACEMENT
FEASIBILITY STUDY
NORTH OF CLAIBORNE AVE. SITE

CROSS SECTIONS
1200' CONCRETE SHIP LOCK

U.S. ARMY ENGINEER DISTRICT, NEW ORLEANS
CORPS OF ENGINEERS
NEW ORLEANS, LOUISIANA

DESIGNED BY: MHG	PLOT SCALE: 480	PLOT DATE: SEPT 1996	CADD FILE: PLATB16.DGN
DRAWN BY: TWU			FILE NO. H-2-40392
CHECKED BY: MHG	DATE: OCTOBER 1996		

PLATE B-16

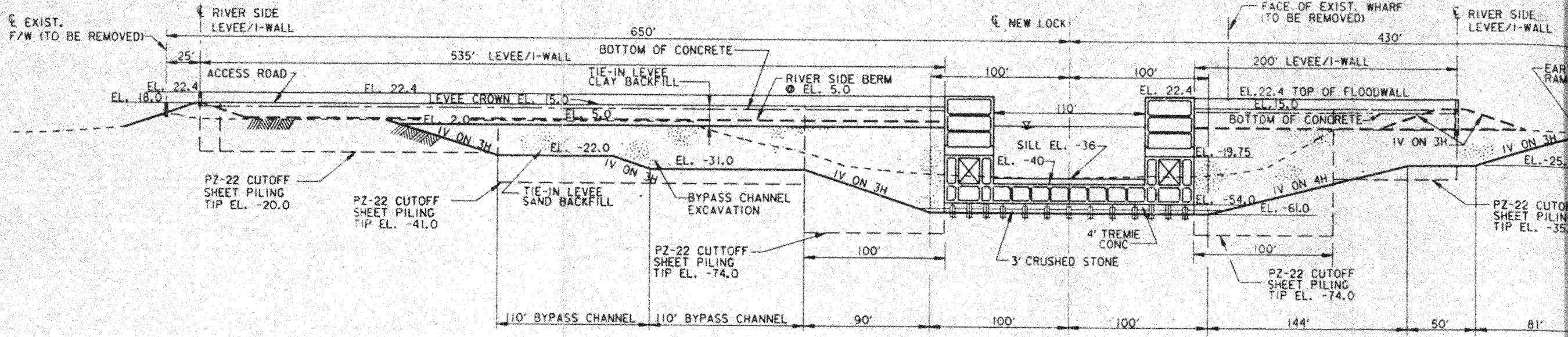

SECTION A (17|18)

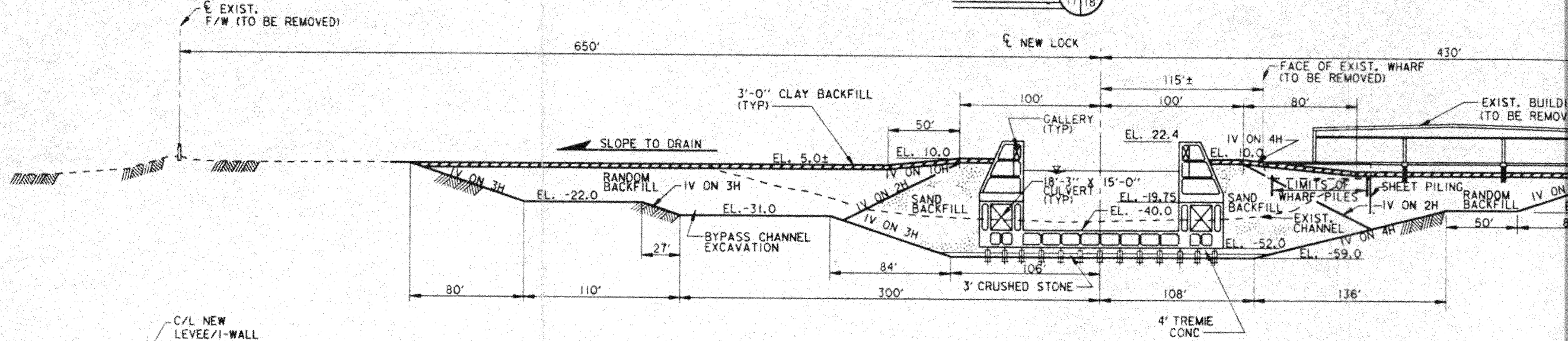

SECTION B (17|18)

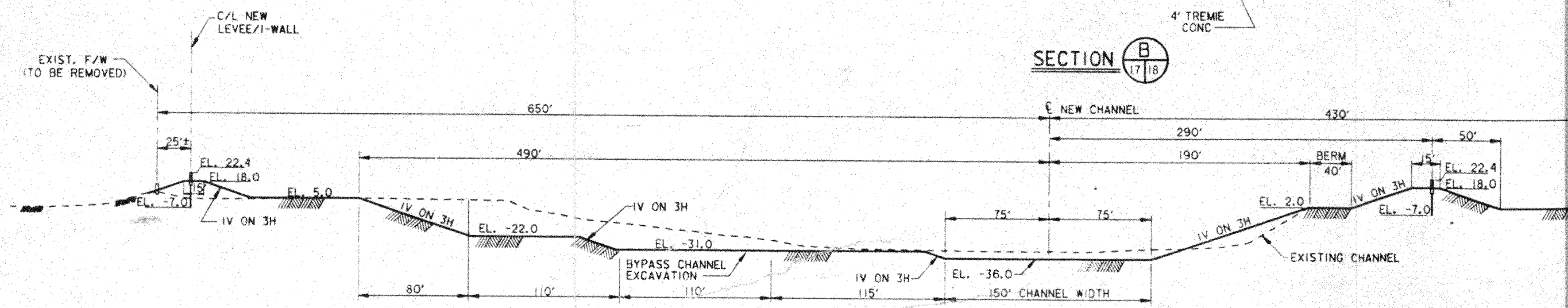

SECTION C (17|18)

SCALE: 1" = 40'

40' 0 40' 80'

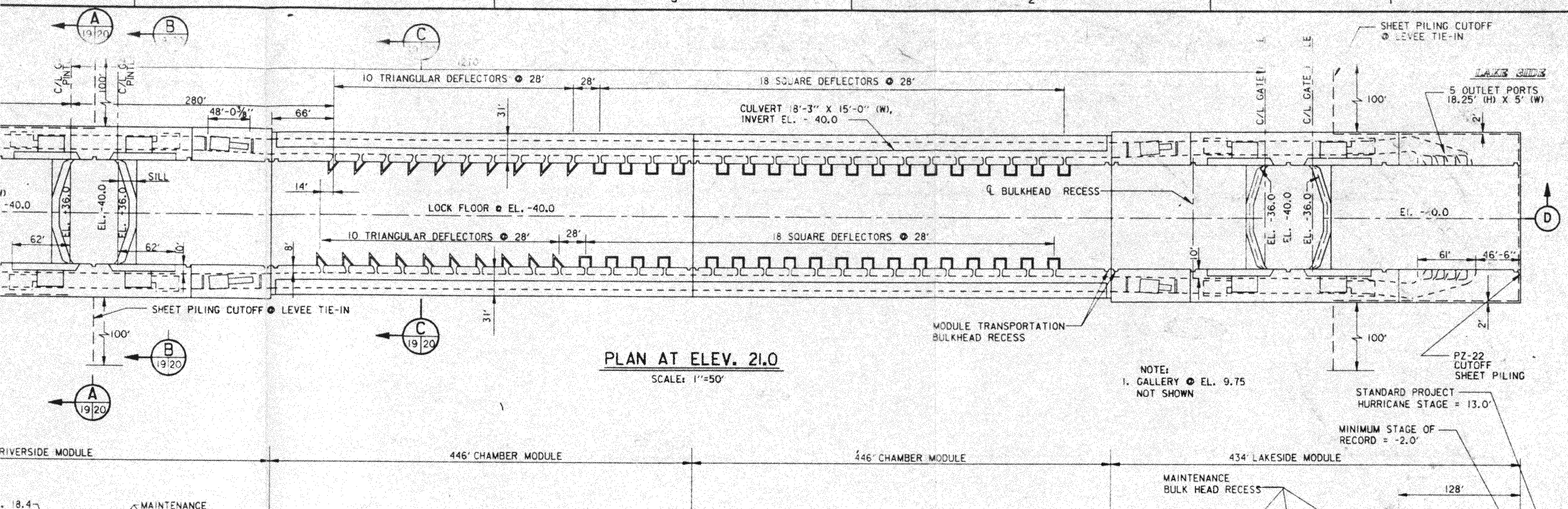

PLAN AT ELEV. 21.0

SCALE: 1"=50'

SECTION (D)

FILLING AND EMPTYING SYSTEM

SCALE: HORIZ. 1"=50'
VERT. 1"=20'

48"ø PILES AT 14' O. C. NOT SHOWN FOR CLARITY

SCALE: 1" = 20'

20' 0 20' 40' 60' 80'

SCALE: 1" = 50'

50' 0 50' 100' 150' 200'

MISSISSIPPI RIVER - GULF OUTLET
NEW LOCK AND CONNECTING CHANNELS
INDUSTRIAL CANAL LOCK REPLACEMENT
FEASIBILITY STUDY
NORTH OF CLAIBORNE AVENUE SITE

PLAN AND WALL PROFILES 1200' CONCRETE SHIP LOCK

U.S. ARMY ENGINEER DISTRICT, NEW ORLEANS
CORPS OF ENGINEERS
NEW ORLEANS, LOUISIANA

DESIGNED BY: MHG	PLOT SCALE: 600	PLOT DATE: JULY 1996	CADD FILE: PLATB19.DGN
DRAWN BY: RMD & TMU			FILE NO. H-2-40392
CHECKED BY: MHG	DATE: OCTOBER 1994		

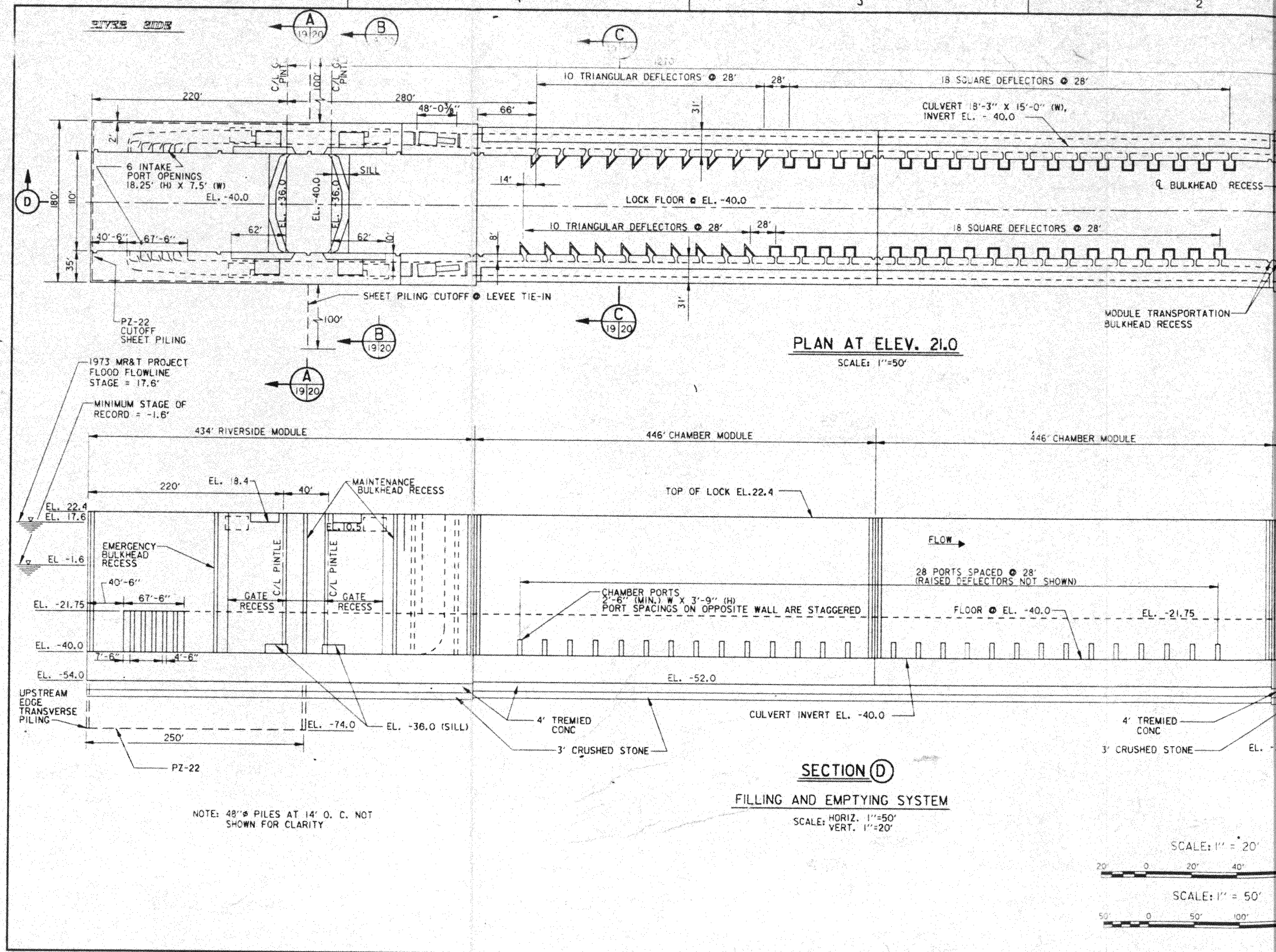
RIVER SIDE
10 TRIANGULAR DEFLECTORS @ 28'
18 SQUARE DEFLECTORS @ 28'
CULVERT 18'-3" X 15'-0" (W), INVERT EL. - 40.0
6 INTAKE PORT OPENINGS 18.25' (H) X 7.5' (W)
EL. -40.0
SILL
LOCK FLOOR @ EL. -40.0
℄ BULKHEAD RECESS
SHEET PILING CUTOFF @ LEVEE TIE-IN
PZ-22 CUTOFF SHEET PILING
MODULE TRANSPORTATION BULKHEAD RECESS
PLAN AT ELEV. 21.0
SCALE: 1"=50'
1973 MR&T PROJECT FLOOD FLOWLINE STAGE = 17.6'
MINIMUM STAGE OF RECORD = -1.6'
434' RIVERSIDE MODULE
446' CHAMBER MODULE
446' CHAMBER MODULE
MAINTENANCE BULKHEAD RECESS
TOP OF LOCK EL.22.4
EMERGENCY BULKHEAD RECESS
GATE RECESS
C/L PINTLE
FLOW
28 PORTS SPACED @ 28' (RAISED DEFLECTORS NOT SHOWN)
CHAMBER PORTS 2'-6" (MIN.) W X 3'-9" (H) PORT SPACINGS ON OPPOSITE WALL ARE STAGGERED
FLOOR @ EL. -40.0
EL. -21.75
EL. -52.0
UPSTREAM EDGE TRANSVERSE PILING
EL. -74.0
EL. -36.0 (SILL)
4' TREMIED CONC
3' CRUSHED STONE
CULVERT INVERT EL. -40.0
PZ-22
SECTION D
FILLING AND EMPTYING SYSTEM
SCALE: HORIZ. 1"=50' VERT. 1"=20'
NOTE: 48"ø PILES AT 14' O. C. NOT SHOWN FOR CLARITY
SCALE: 1" = 20'
SCALE: 1" = 50'

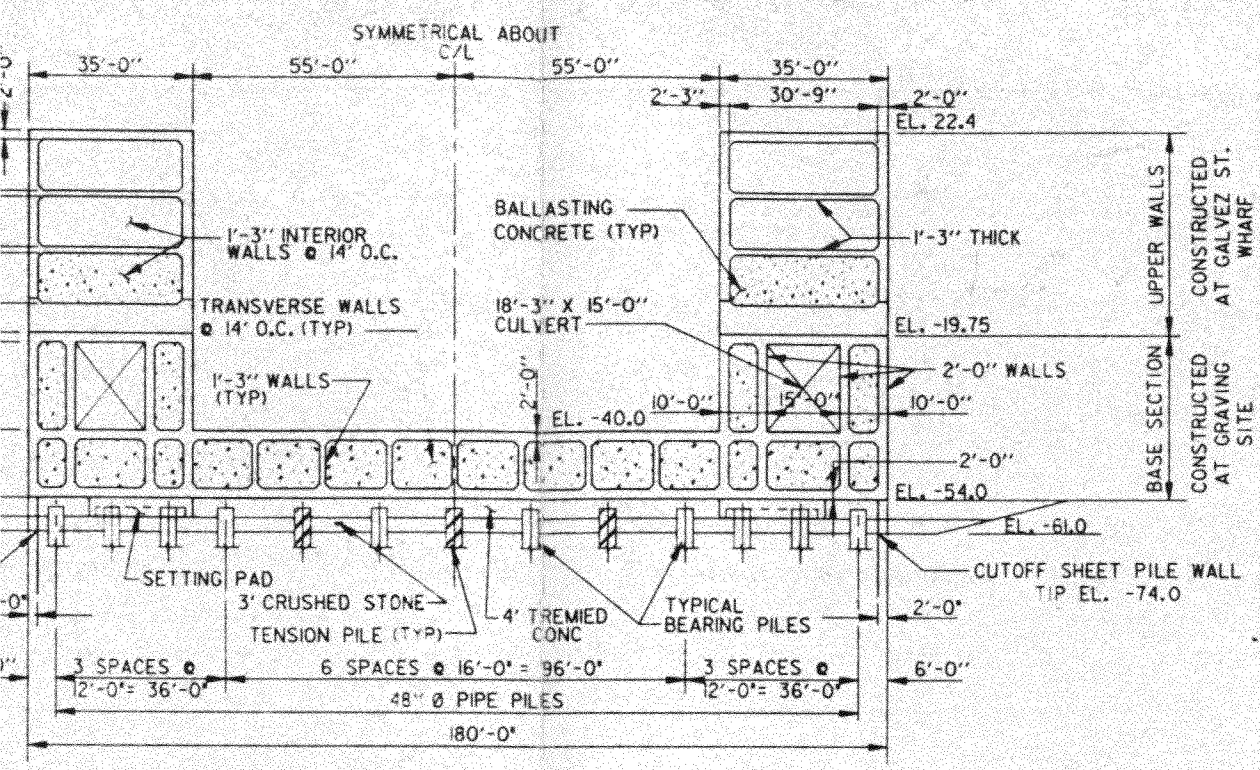

SECTION A (19|20)

SCALE: 1" = 20'

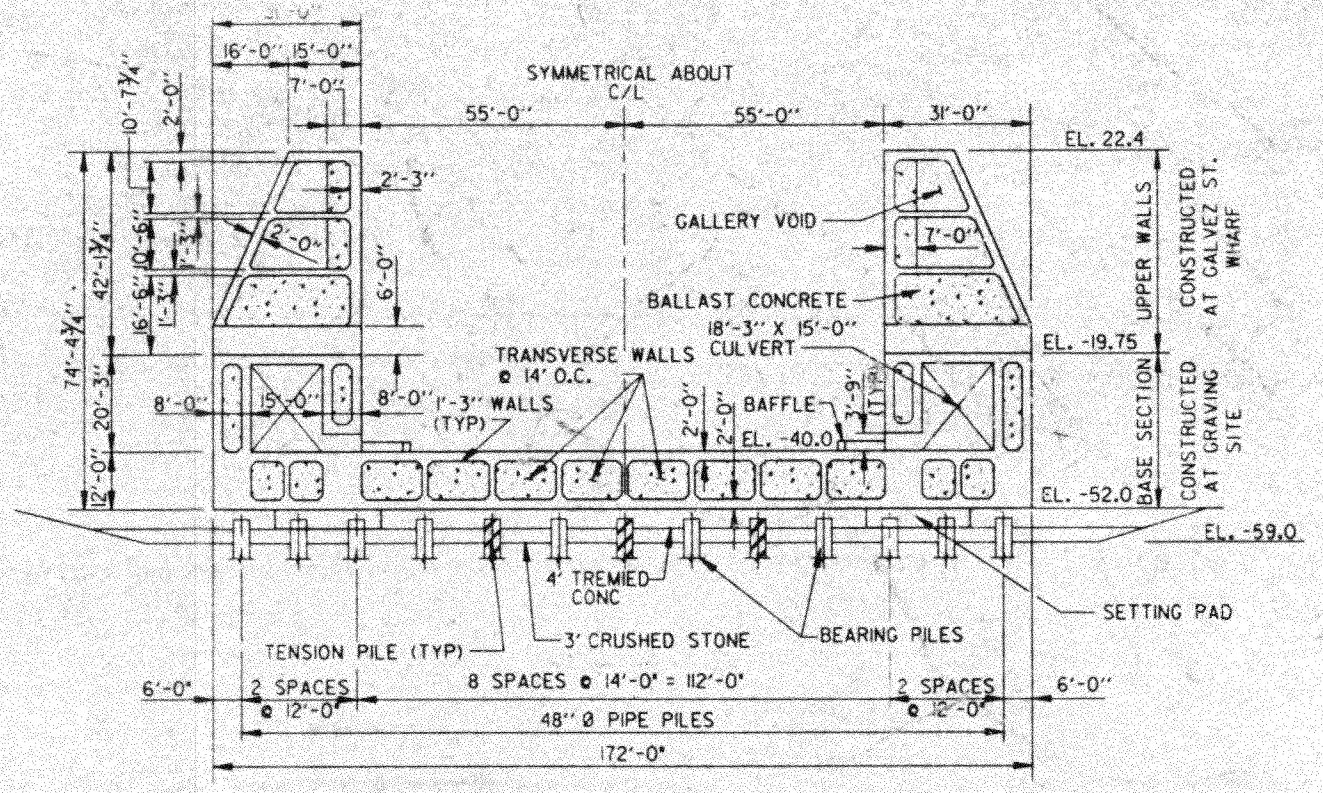

SECTION C (19|20)

SCALE: 1" = 20'

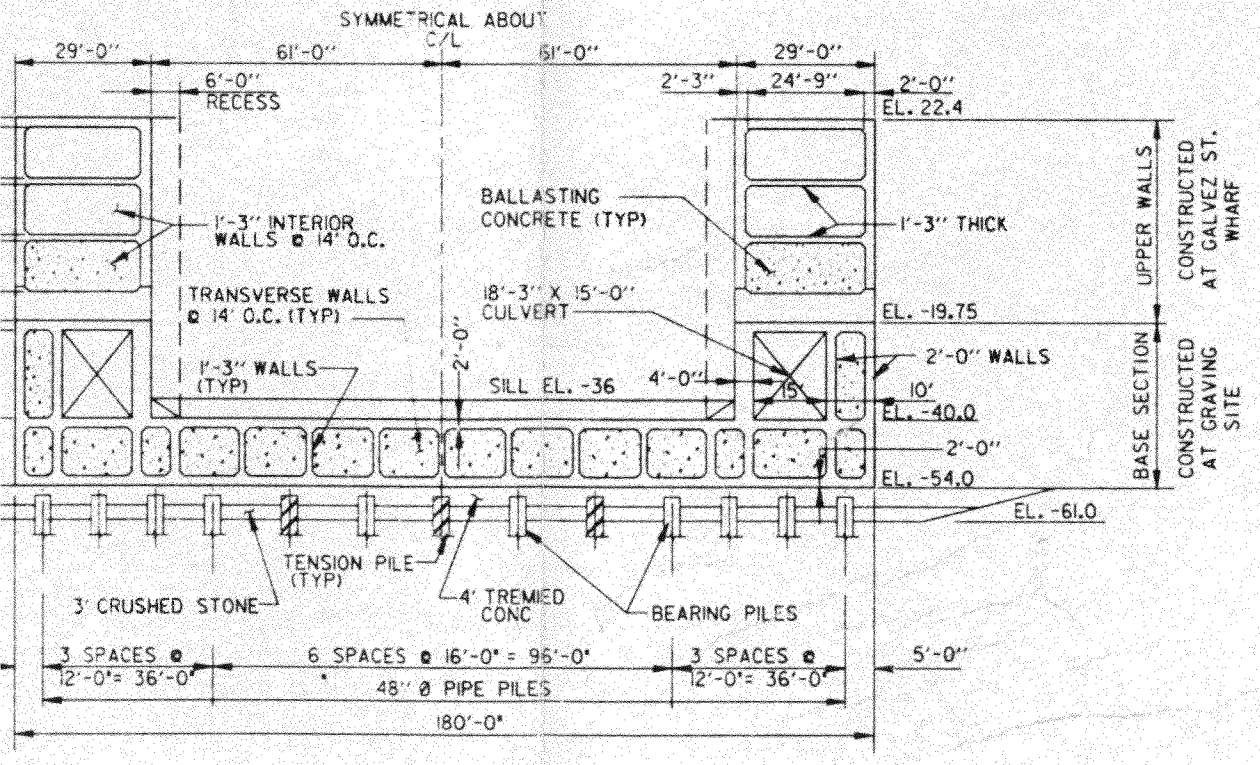

SECTION B (19|20)

SCALE: 1" = 20'

SCALE: 1" = 20'

20' 0 20' 40' 60' 80'

MISSISSIPPI RIVER - GULF OUTLET
NEW LOCK AND CONNECTING CHANNELS
INDUSTRIAL CANAL LOCK REPLACEMENT
FEASIBILITY STUDY
NORTH OF CLAIBORNE AVENUE SITE

SECTIONS AND DETAILS 1200' CONCRETE SHIP LOCK

U.S. ARMY ENGINEER DISTRICT, NEW ORLEANS
CORPS OF ENGINEERS
NEW ORLEANS, LOUISIANA

C·A·D

DESIGNED BY: MHG	PLOT SCALE: 240	PLOT DATE: JULY 1996	CADD FILE: PLATE20.DGN
DRAWN BY: RMD & TMU			FILE NO. H-2-40392
CHECKED BY: MHG		DATE: OCTOBER 1996	

PLATE B-20

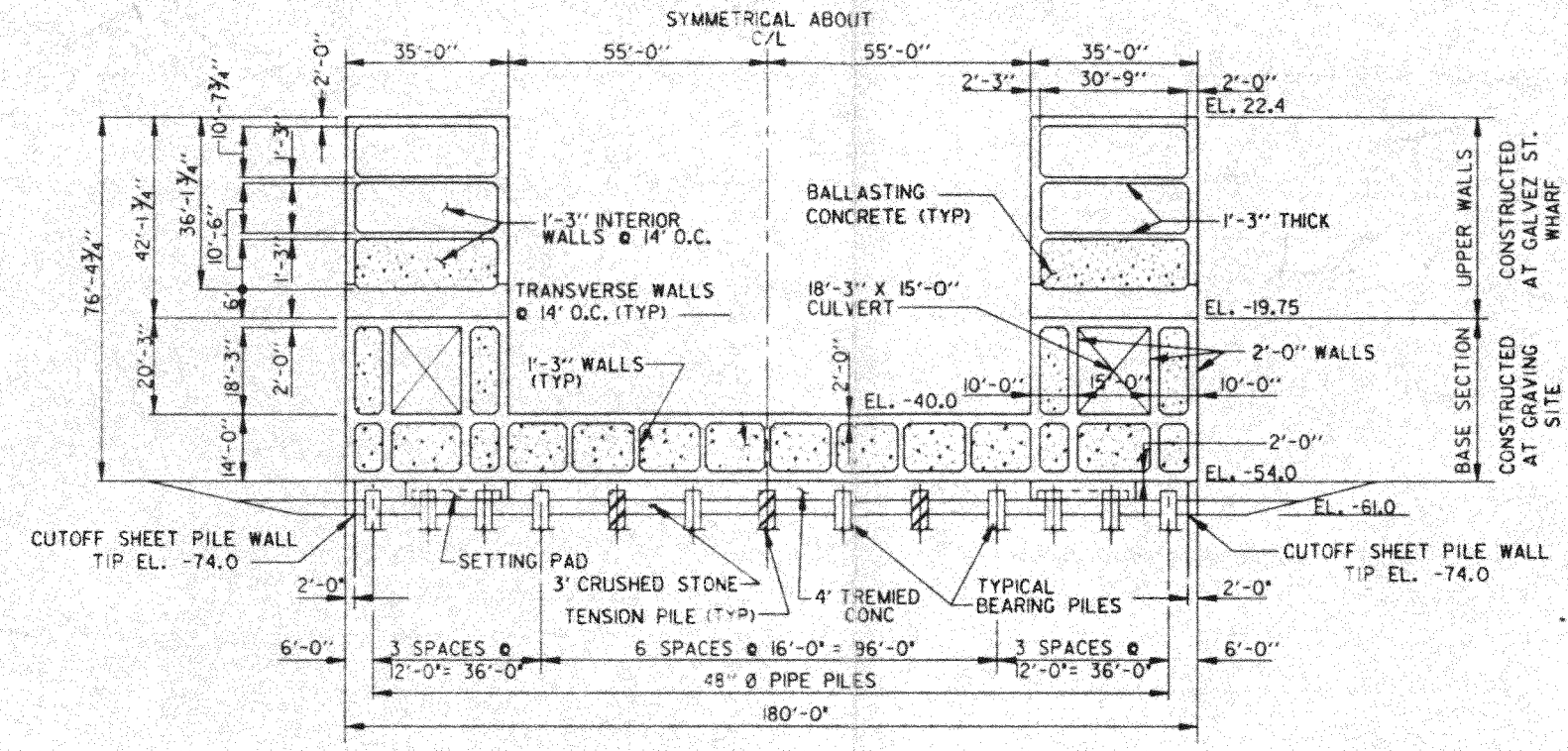

SECTION A (19|20)

SCALE: 1" = 20'

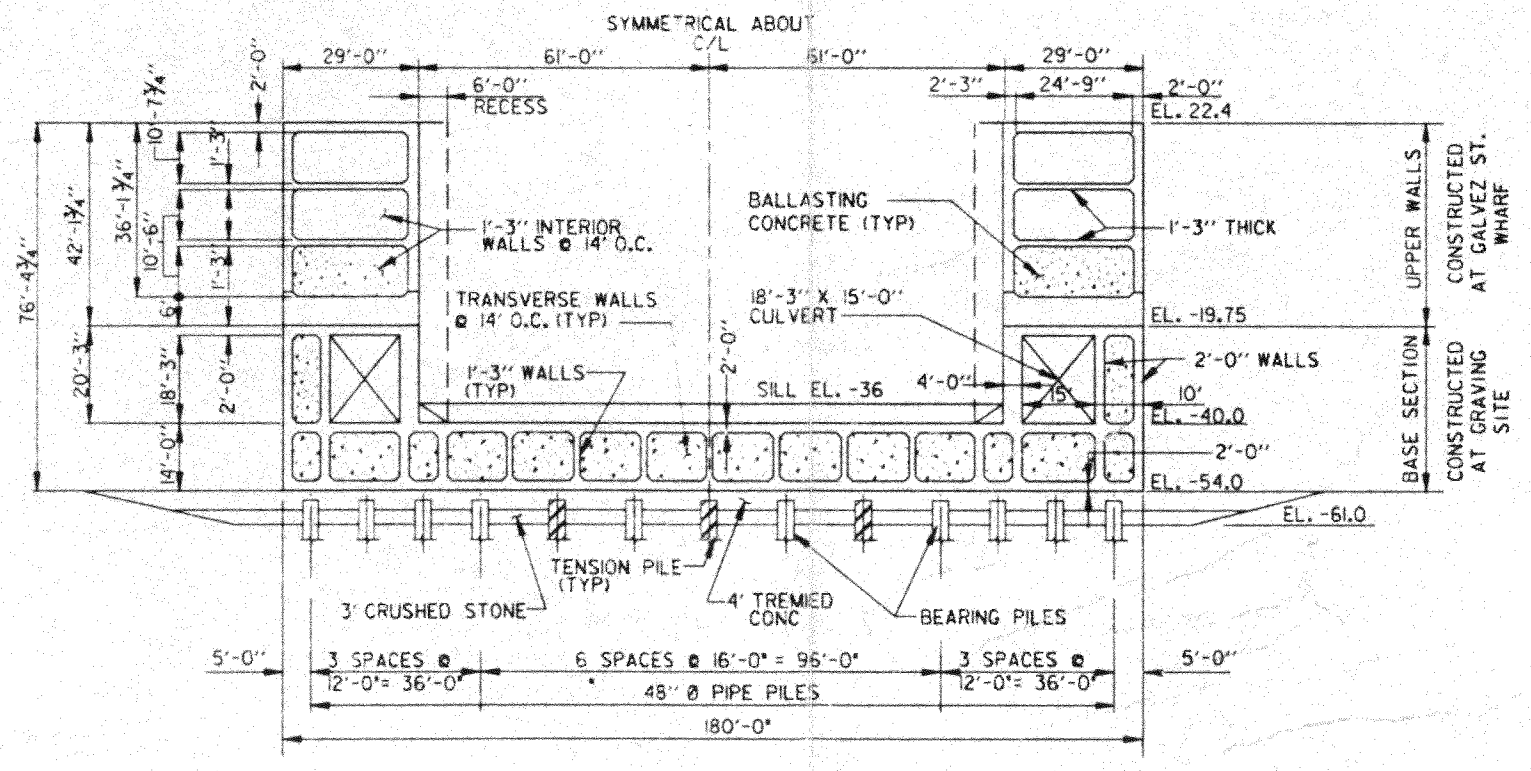

SECTION B (19|20)

SCALE: 1" = 20'

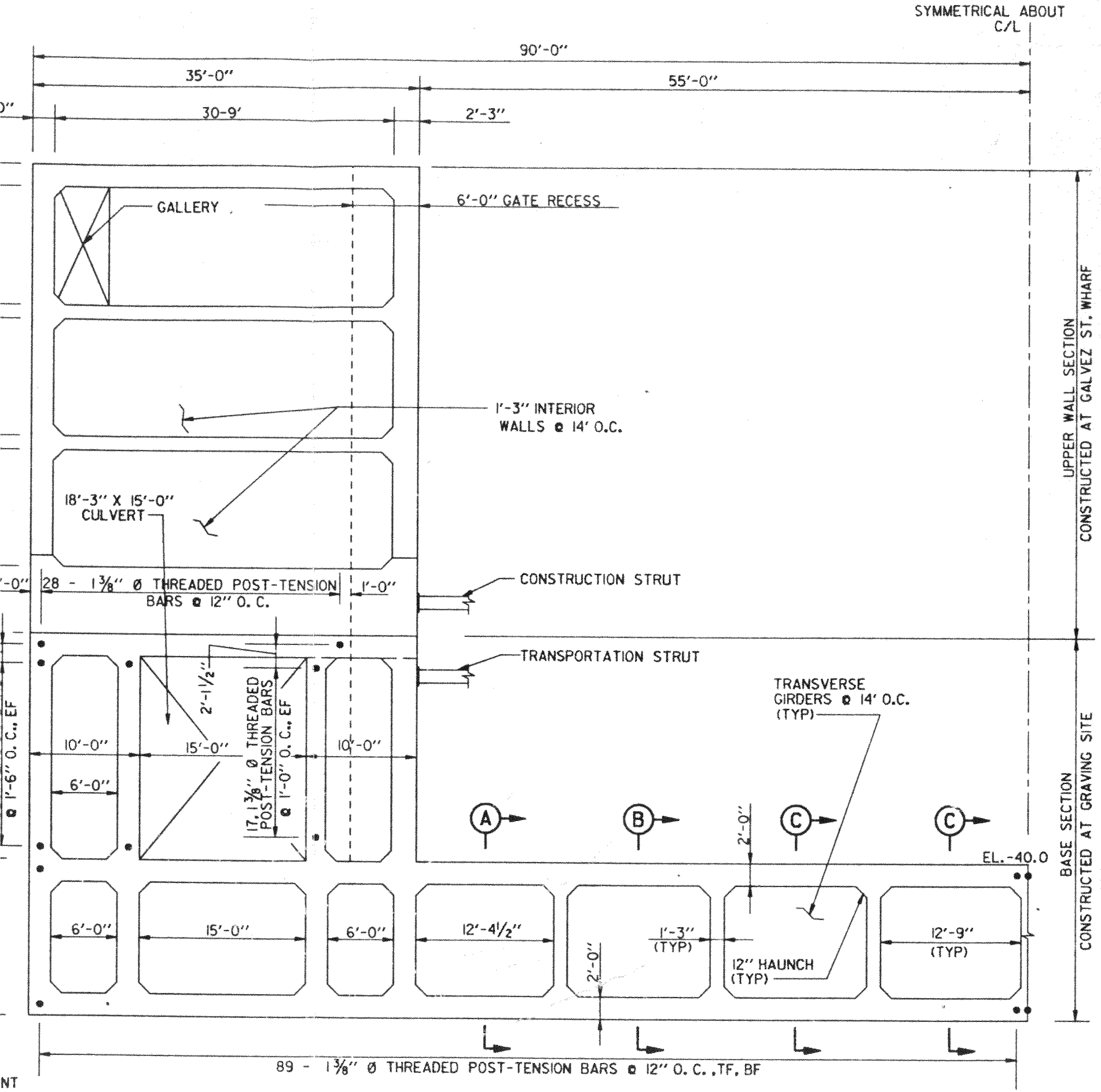

TYPICAL GATE BAY SECTION

SCALE: 1" = 5'

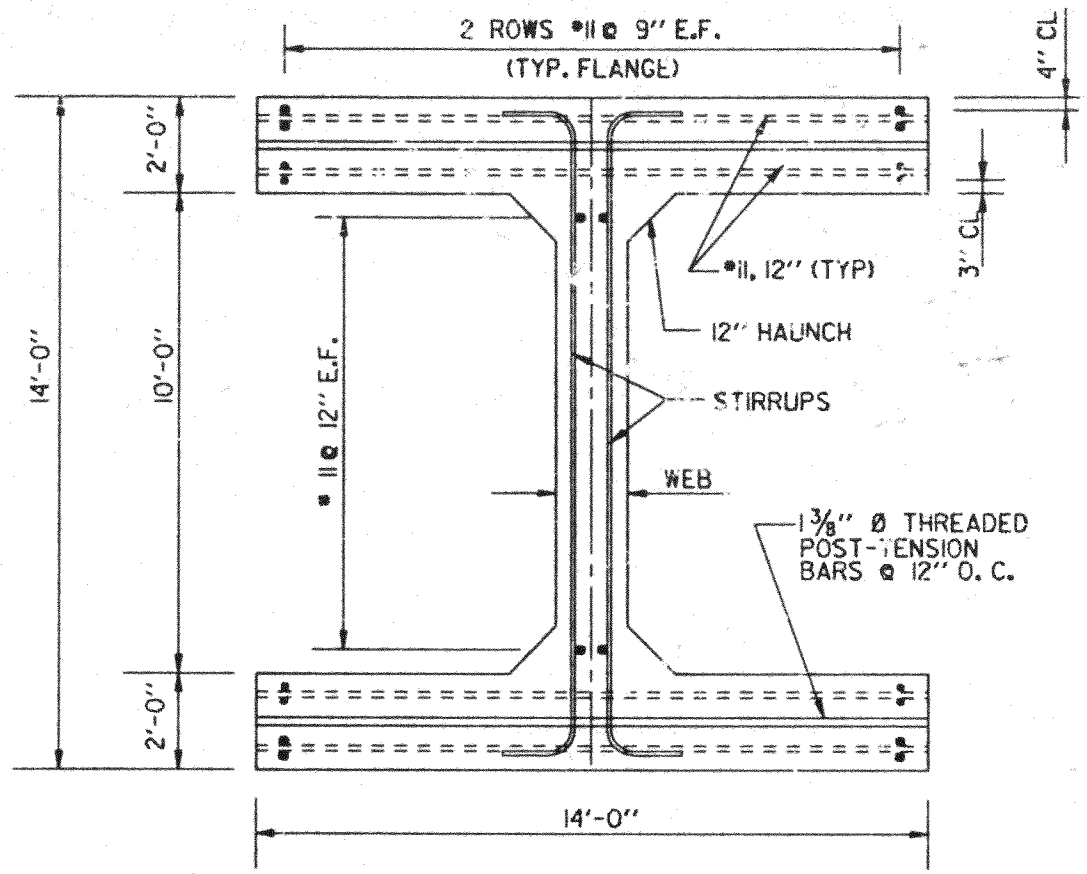

SECTIONS (A), (B), AND (C)

SCALE: ½" = 1'-0"

SECTION	WEB	STIRRUPS
(A)	27"	#8, 6"
(B)	21"	#8, 9"
(C)	18"	#8, 12"

SCALE: ½" = 1'- 0"

12" 0 2' 4' 6' 8'

SCALE: 1" = 5'

5' 0 5' 10' 15' 20'

MISSISSIPPI RIVER - GULF OUTLET
NEW LOCK AND CONNECTING CHANNELS
INDUSTRIAL CANAL LOCK REPLACEMENT
FEASIBILITY STUDY
NORTH OF CLAIBORNE AVENUE SITE

GATEBAY REINFORCEMENT DETAILS
1200' CONCRETE SHIP LOCK

U.S. ARMY ENGINEER DISTRICT, NEW ORLEANS
CORPS OF ENGINEERS
NEW ORLEANS, LOUISIANA

DESIGNED BY: MHG / DCB	PLOT SCALE: 60	PLOT DATE: JULY 98	CADD File: PLATB21.DGN
DRAWN BY: TMU			FILE NO. H-2-40392
CHECKED BY: MHG	DATE: OCTOBER 1998		

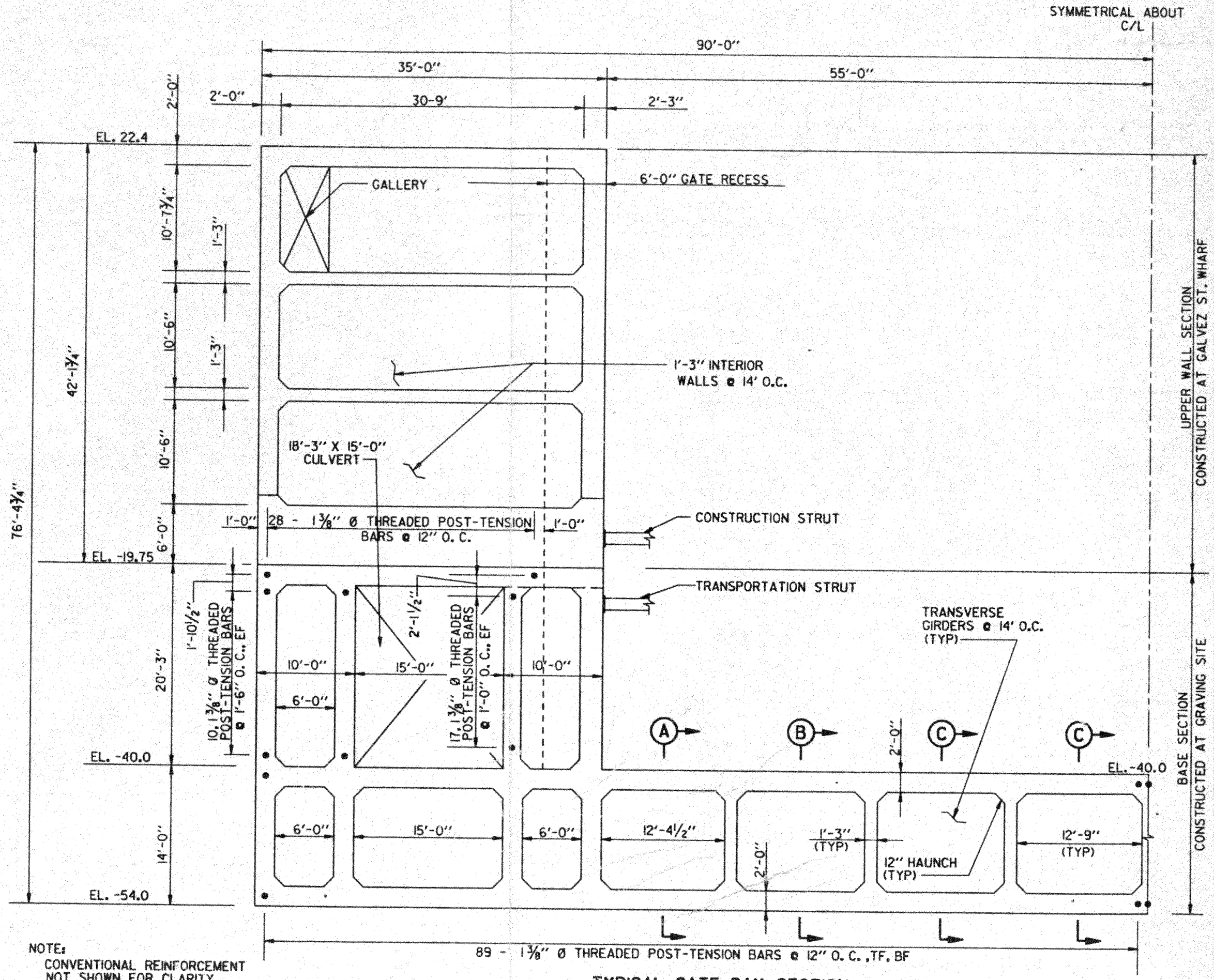

NOTE:
CONVENTIONAL REINFORCEMENT NOT SHOWN FOR CLARITY

TYPICAL GATE BAY SECTION

SCALE: 1" = 5'

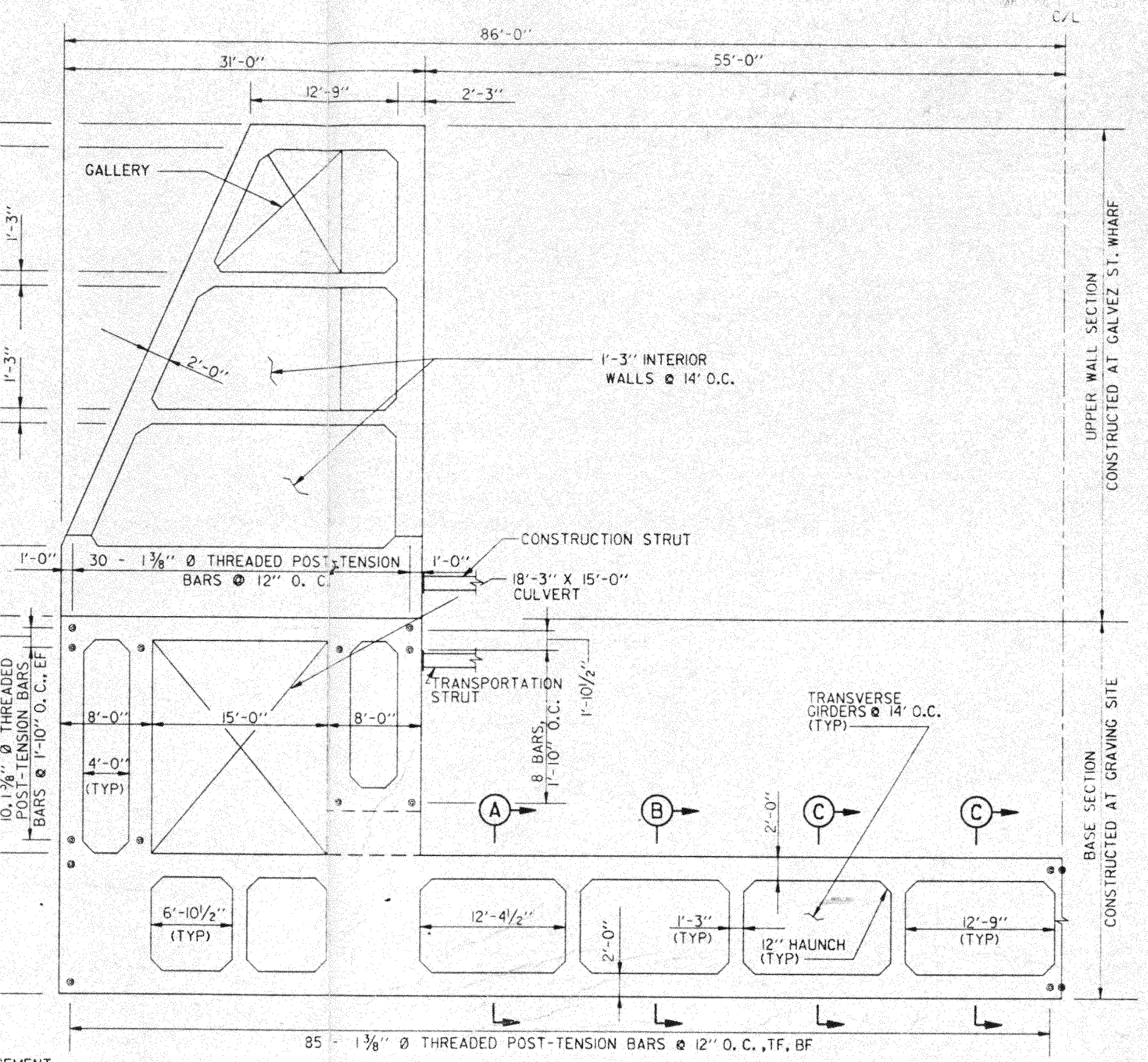

TYPICAL CHAMBER SECTION

SCALE: 1" = 5'

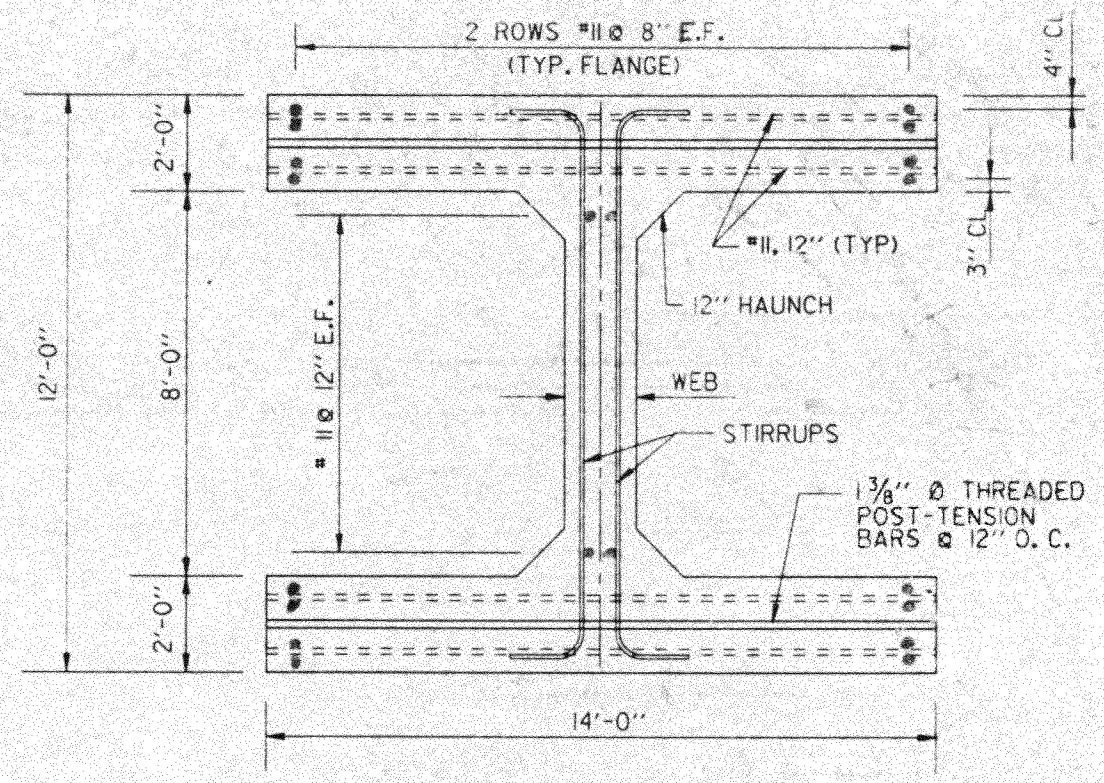

SECTIONS (A), (B), AND (C)

SCALE: 1/2" = 1'-0"

SECTION	WEB	STIRRUPS
(A)	27"	#8, 6"
(B)	21"	#8, 9"
(C)	18"	#8, 12"

SCALE: 1/2" = 1'- 0"

12" 0 2' 4' 6' 8'

SCALE: 1" = 5'

5' 0 5' 10' 15' 20'

MISSISSIPPI RIVER - GULF OUTLET
NEW LOCK AND CONNECTING CHANNELS
INDUSTRIAL CANAL LOCK REPLACEMENT
FEASIBILITY STUDY
NORTH OF CLAIBORNE AVENUE SITE

CHAMBER REINFORCEMENT DETAILS
1200' CONCRETE SHIP LOCK

U.S. ARMY ENGINEER DISTRICT, NEW ORLEANS
CORPS OF ENGINEERS
NEW ORLEANS, LOUISIANA

DESIGNED BY: MHG / DCB	PLOT SCALE: 60	PLOT DATE: SEPT 96	CADD FILE: PLATB22.DGN
DRAWN BY: RMD			FILE NO. H-2-40392
CHECKED BY: MHG	DATE: OCTOBER 1996		

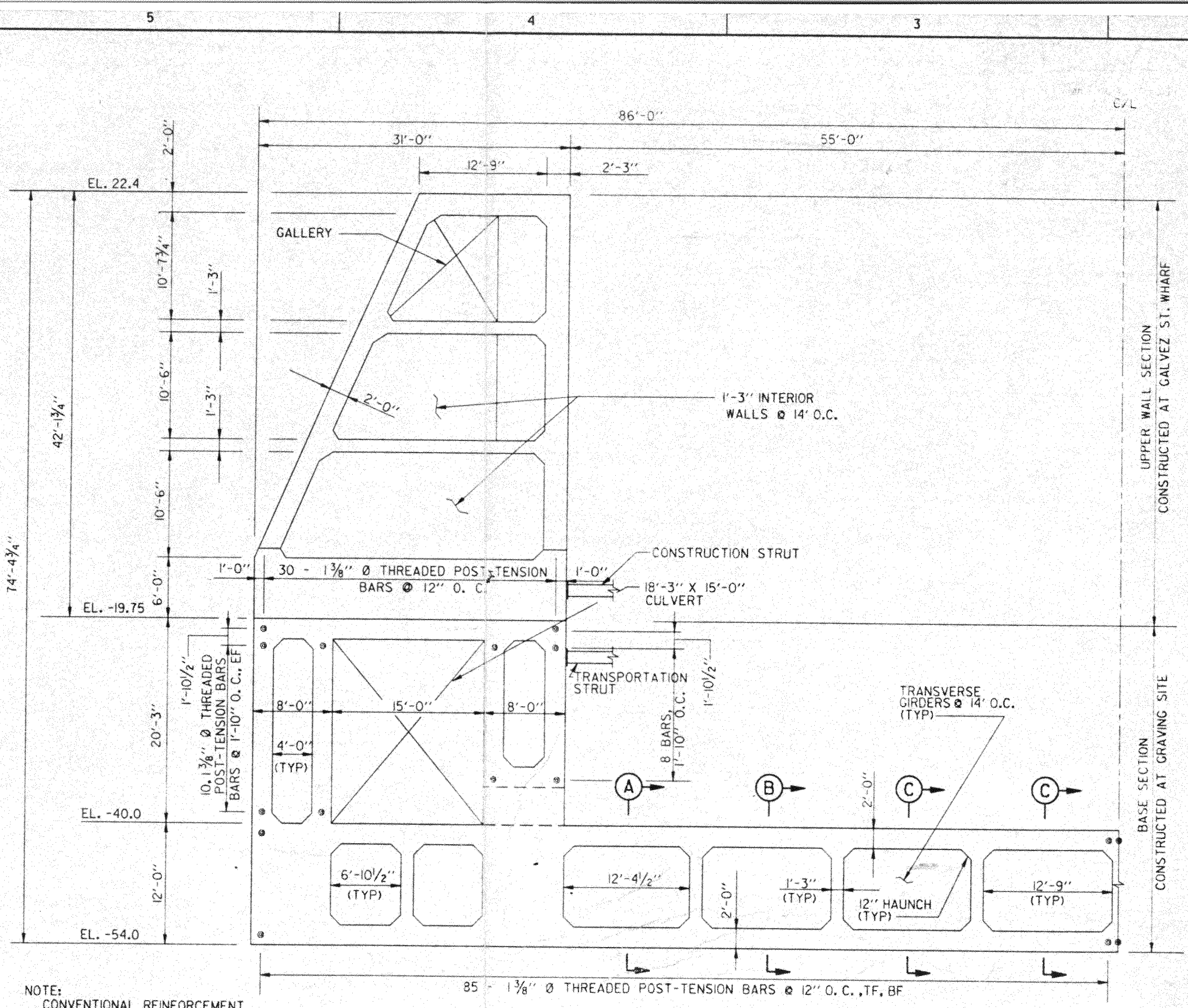

NOTE:
CONVENTIONAL REINFORCEMENT NOT SHOWN FOR CLARITY

TYPICAL CHAMBER SECTION

SCALE: 1" = 5'

LAKE SIDE

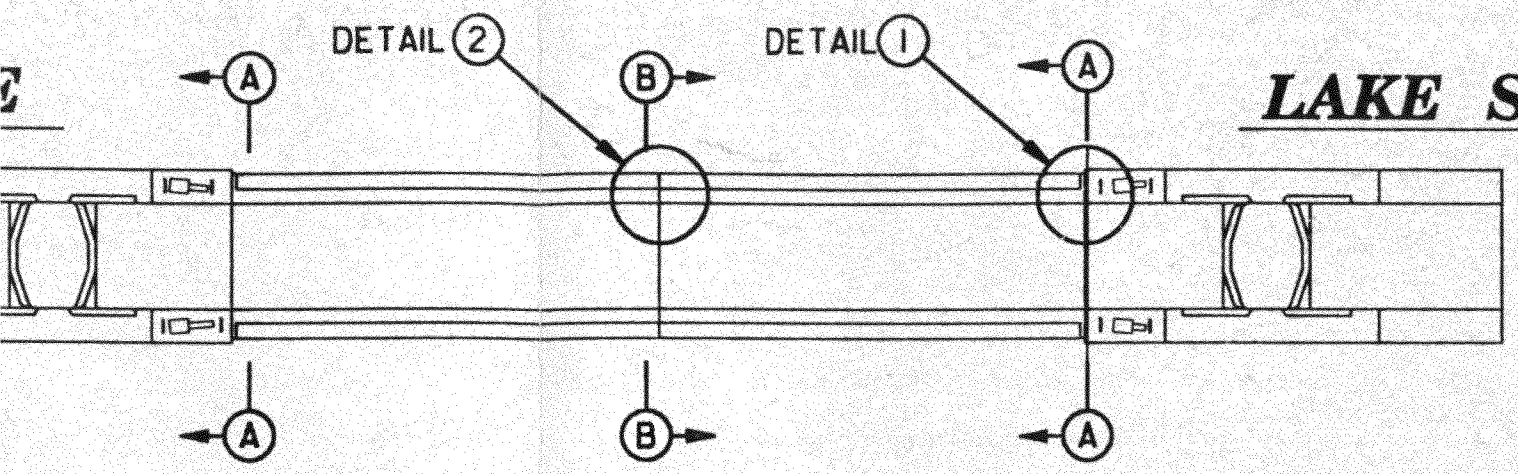

KEY PLAN
NOT TO SCALE

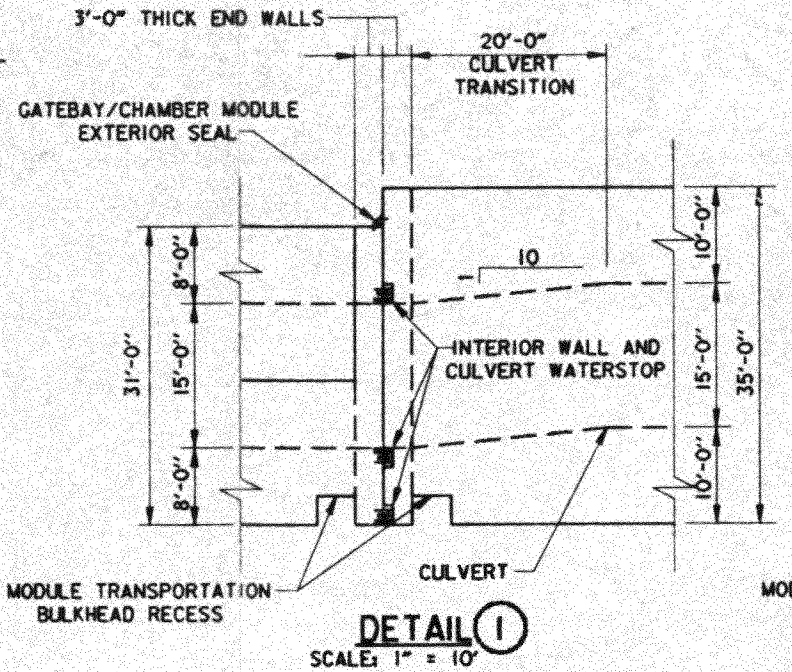

DETAIL 1
SCALE: 1" = 10'

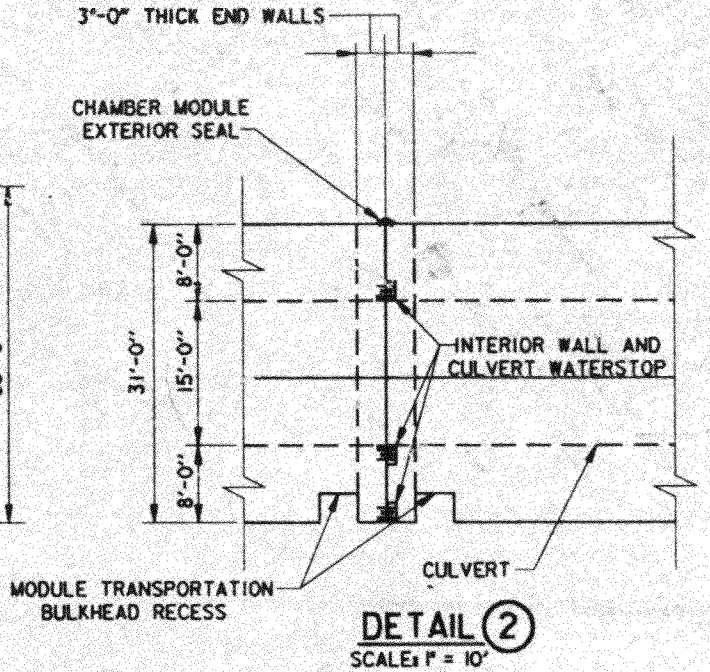

DETAIL 2
SCALE: 1" = 10'

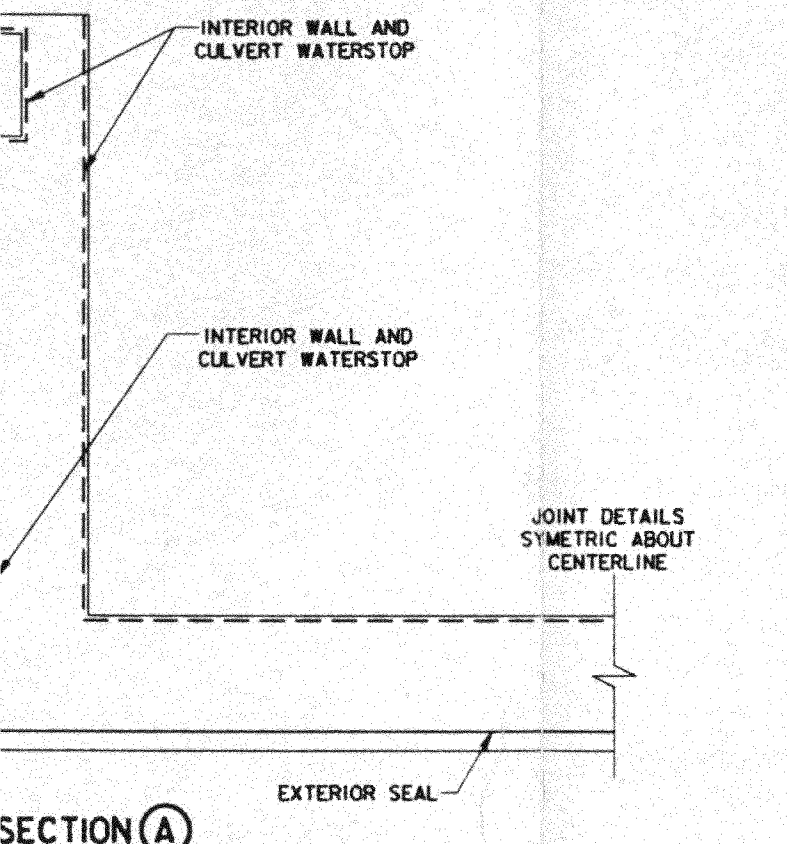

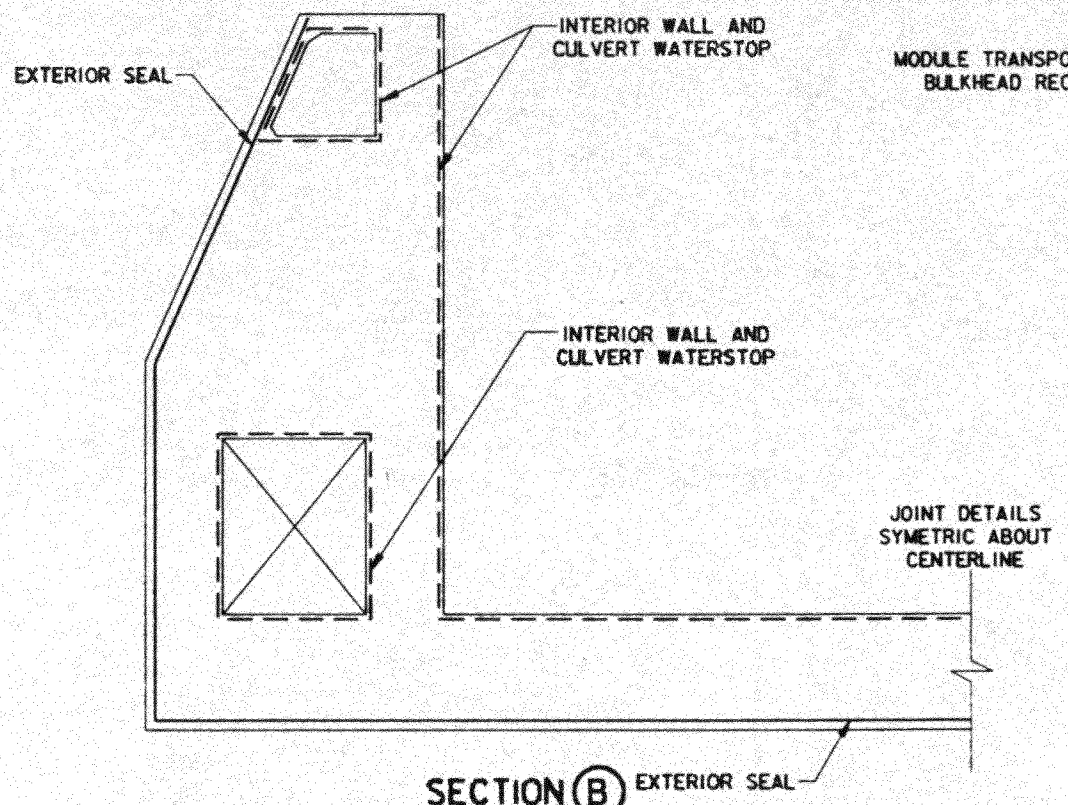

SECTION (A)
SCALE: 1" = 10'

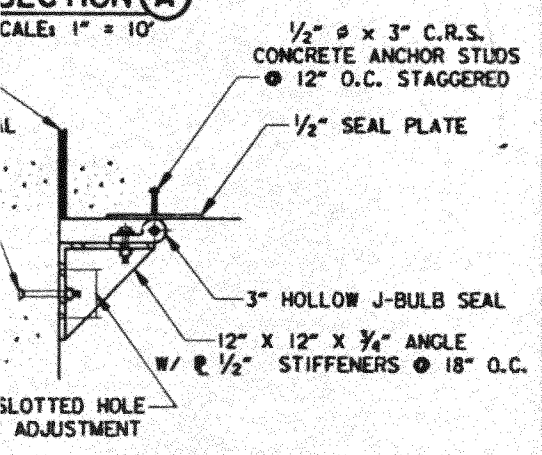

SECTION (B)
SCALE: 1" = 10'

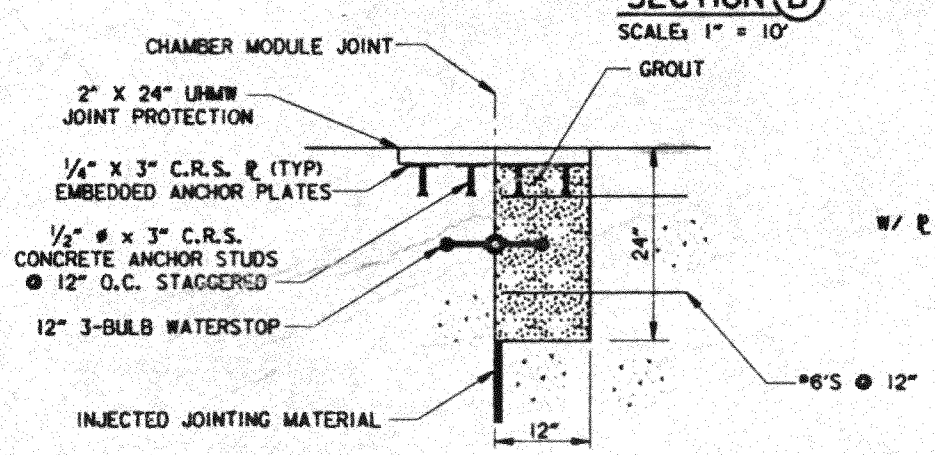

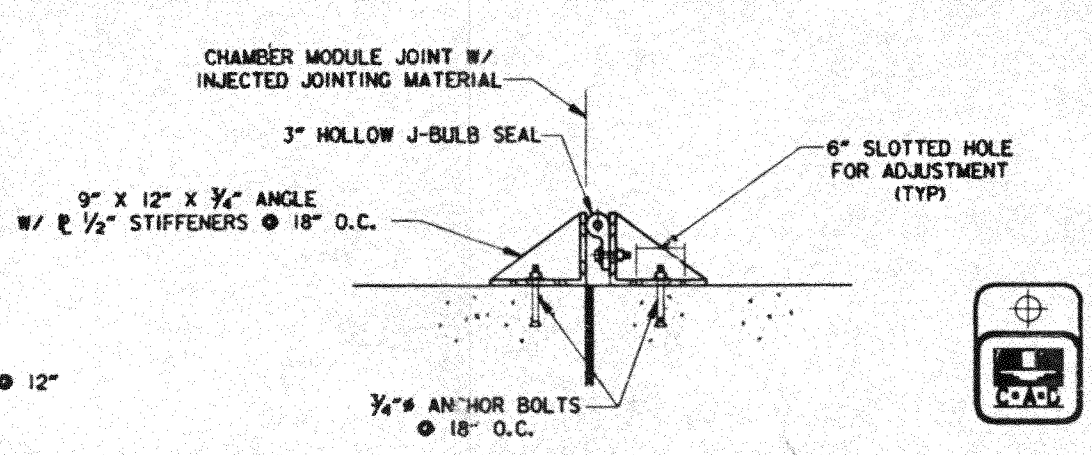

SCALE: 1" = 1'- 0"

12" 0 1' 2' 3' 4' 5'

SCALE: 1" = 10'

10' 0 10' 20' 30' 40'

Y EXTERIOR SEAL DETAIL
SCALE: 1" = 1'-0"

INTERIOR WALL & CULVERT WATERSTOP
SCALE: 1" = 1'-0"

CHAMBER MODULE EXTERIOR SEAL DETAIL
SCALE: 1" = 1'-0"

MISSISSIPPI RIVER - GULF OUTLET
NEW LOCK AND CONNECTING CHANNELS
INDUSTRIAL CANAL LOCK REPLACEMENT
FEASIBILITY STUDY
NORTH OF CLAIBORNE AVENUE SITE

JOINT DETAILS
1200' CONCRETE SHIP LOCK

U.S. ARMY ENGINEER DISTRICT, NEW ORLEANS
CORPS OF ENGINEERS
NEW ORLEANS, LOUISIANA

DESIGNED BY: MHG	PLOT SCALE: 240	PLOT DATE: JULY 1998	CADD FILE: PLAT1123.DGN
DRAWN BY: COB			FILE NO. H-2-40392
CHECKED BY: MHG	DATE: OCTOBER 1998		

PLATE 23

RIVER SIDE

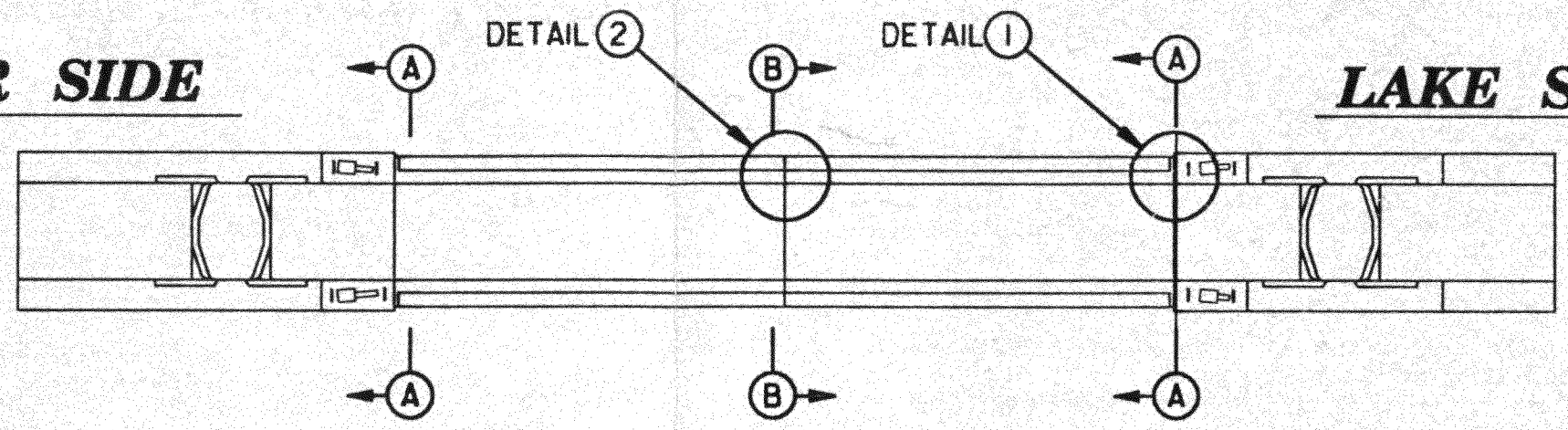

LAKE SIDE

KEY PLAN
NOT TO SCALE

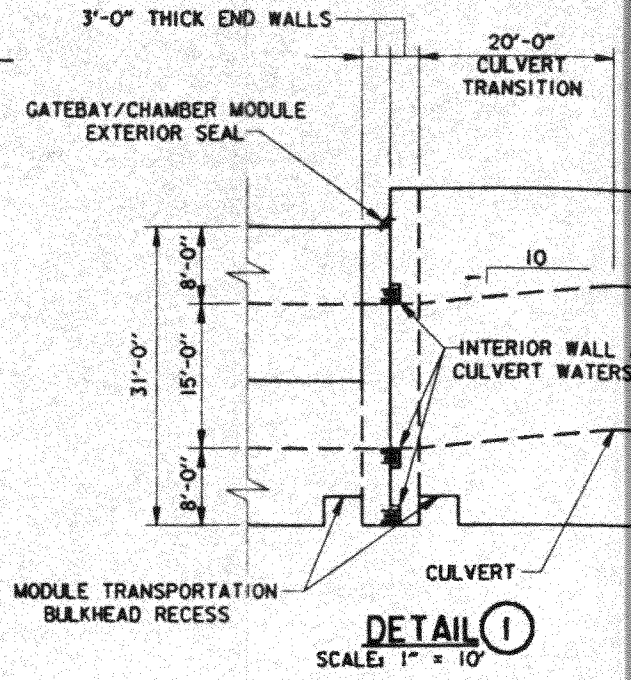

DETAIL (1)
SCALE: 1" = 10'

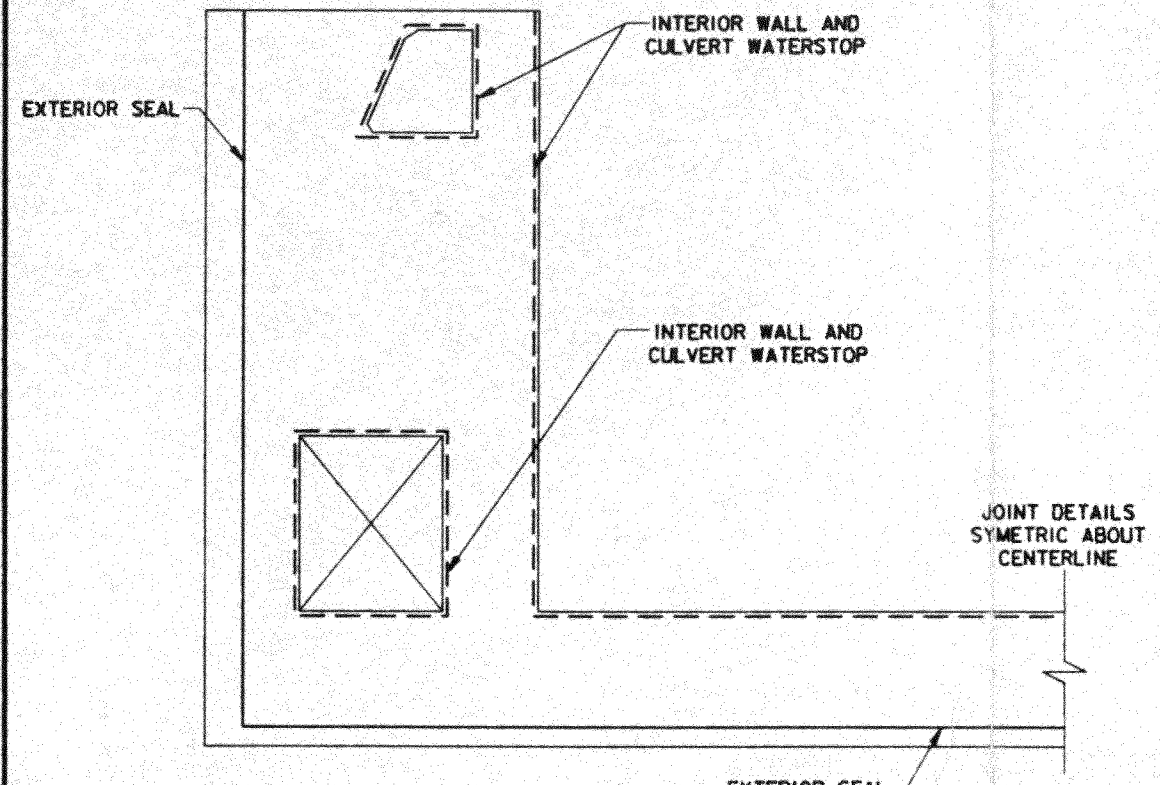

SECTION (A)
SCALE: 1" = 10'

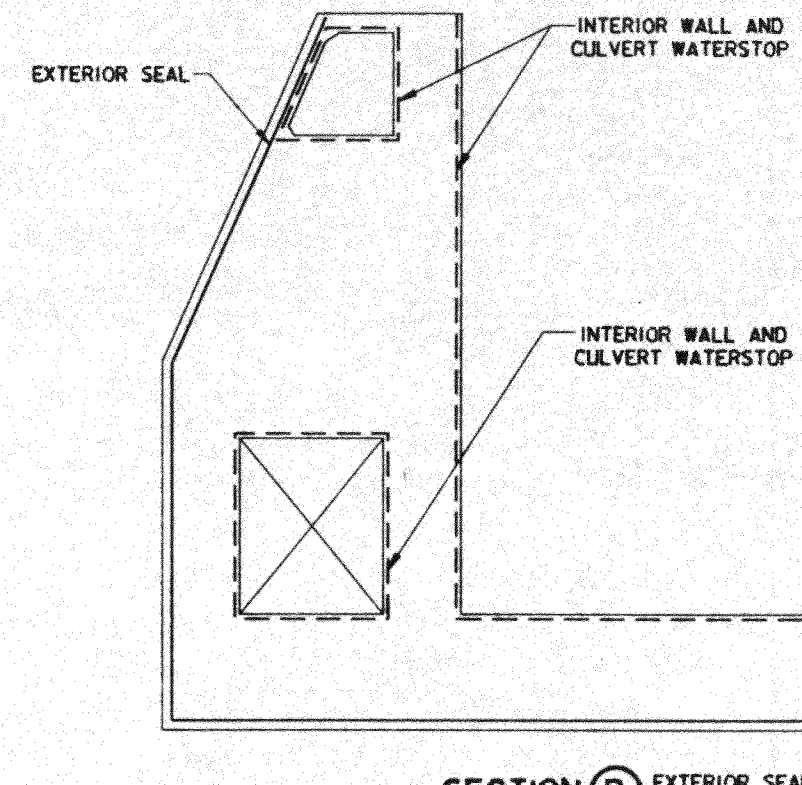

SECTION (B)
SCALE: 1" = 10'

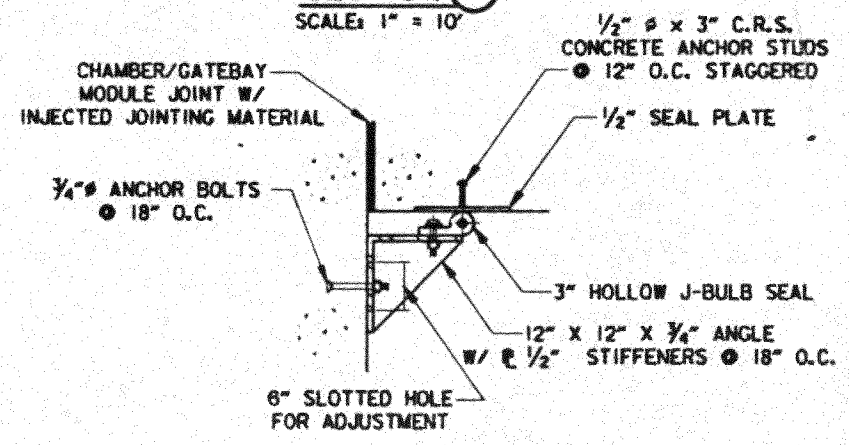

CHAMBER/GATEBAY EXTERIOR SEAL DETAIL
SCALE: 1" = 1'-0"

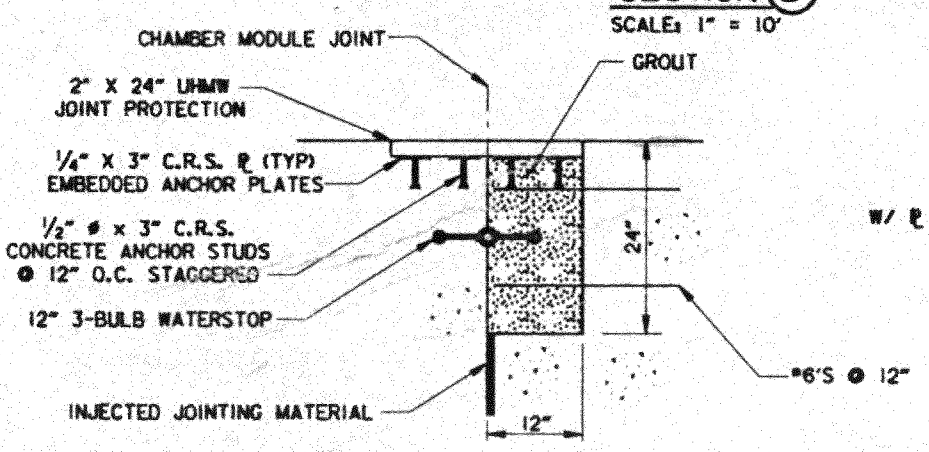

INTERIOR WALL & CULVERT WATERSTOP
SCALE: 1" = 1'-0"

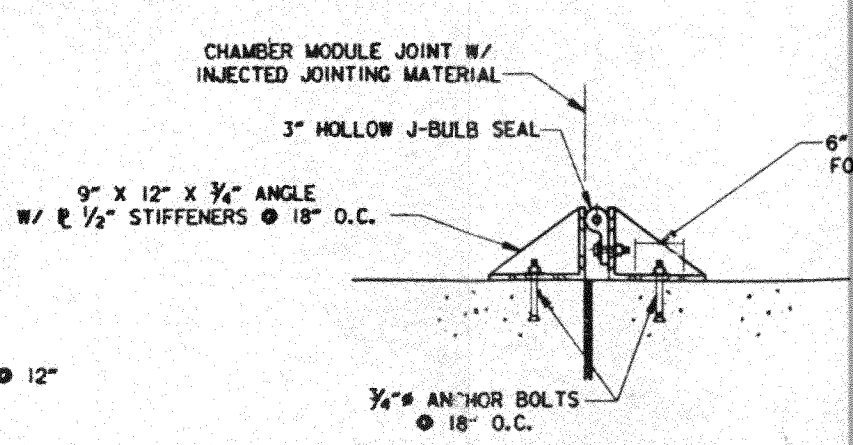

CHAMBER MODULE EXTERIOR SEAL
SCALE

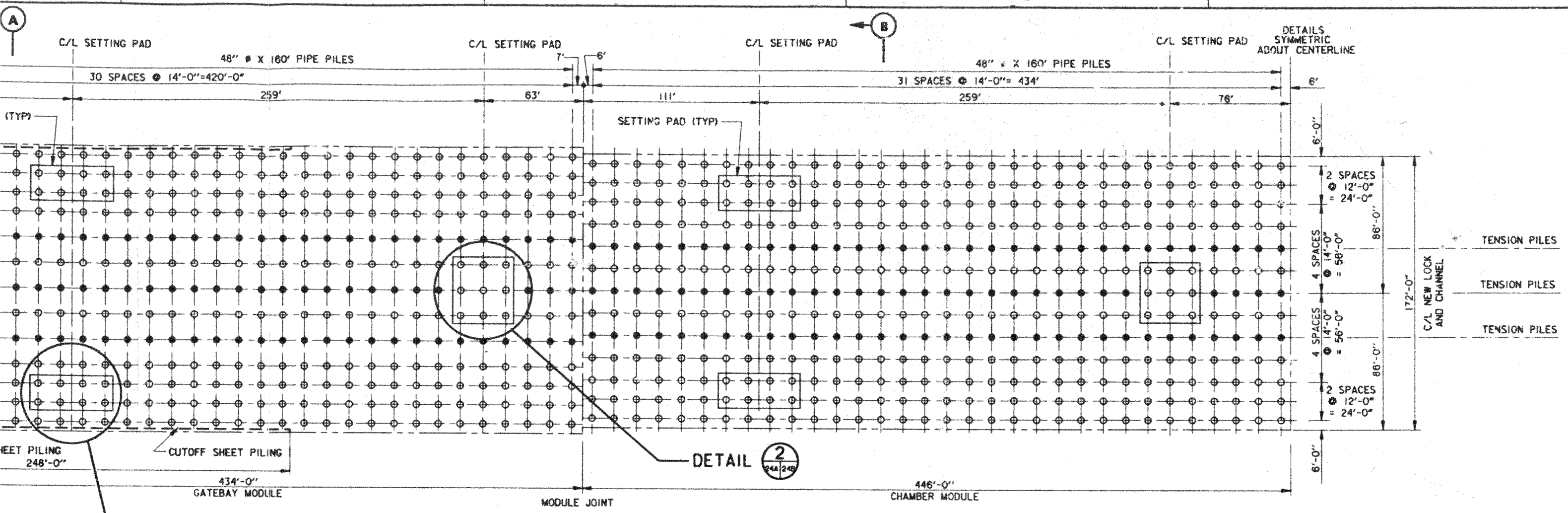

PILE LAYOUT

SCALE: 1"=30'

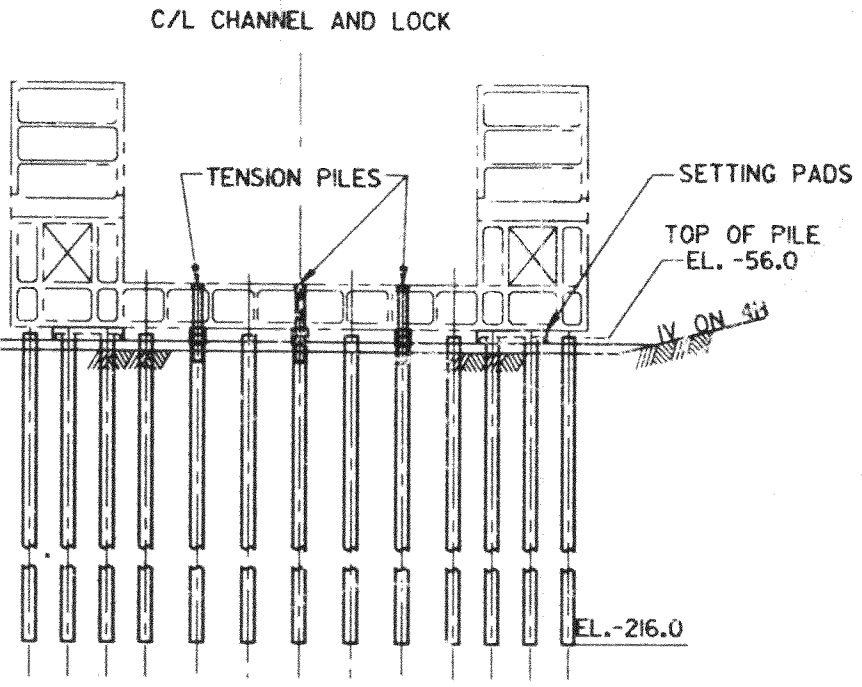

SECTION A

SCALE: 1"=30'

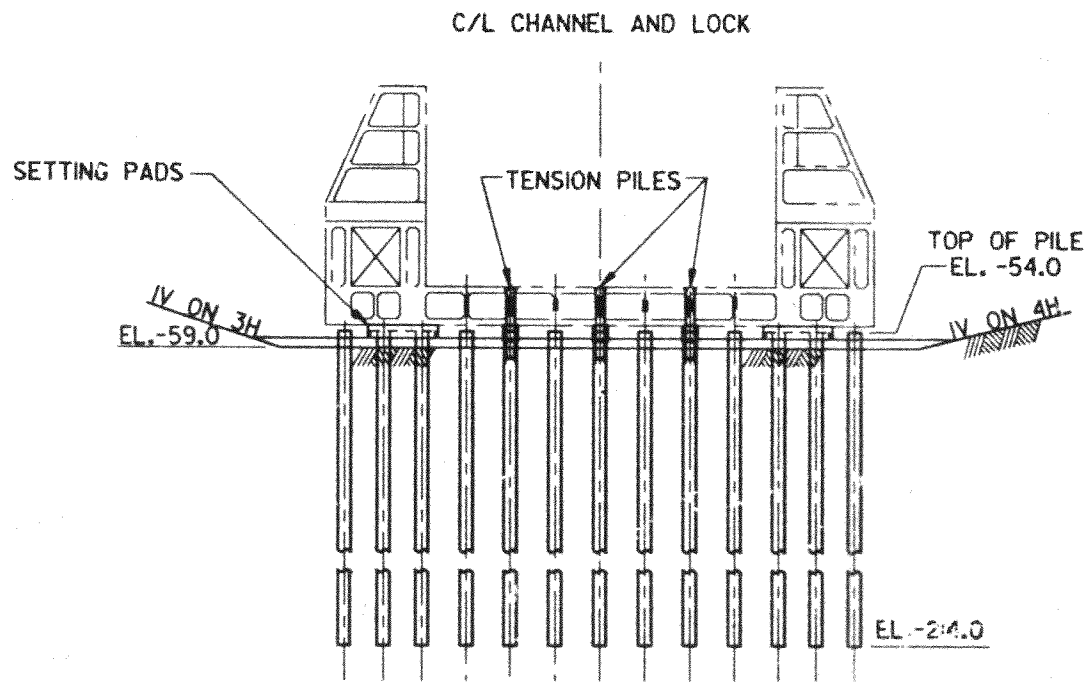

SECTION B

SCALE: 1"=30'

SCALE: 1" = 30'

30' 0 30' 60' 90' 120

MISSISSIPPI RIVER - GULF OUTLET
NEW LOCK AND CONNECTING CHANNELS
INDUSTRIAL CANAL LOCK REPLACEMENT
FEASIBILITY STUDY
NORTH OF CLAIBORNE AVENUE SITE

PILE FOUNDATION PLAN
1200' CONCRETE SHIP LOCK

U.S. ARMY ENGINEER DISTRICT, NEW ORLEANS
CORPS OF ENGINEERS
NEW ORLEANS, LOUISIANA

DESIGNED BY: MHG	PLOT SCALE: 360	PLOT DATE: SEPT 1998	CADD FILE: PLATE24A.DGN
DRAWN BY: TMU			FILE NO.
CHECKED BY: MHG	DATE: OCTOBER 1998		H-2-40392

PLATE P-24A

5 4 3 2

C/L SETTING PAD C/L SETTING PAD C/L SETTING PAD

48" ø X 160' PIPE PILES 48" ø X 160' PIPE PILES

30 SPACES @ 14'-0"=420'-0" 31 SPACES @ 14'-0"= 434'

7' 112' 259' 7' 6' 63' 111' 259'

SETTING PAD (TYP) SETTING PAD (TYP)

6'-0" 90'-0" 180'-0" 90'-0" 6'-0" 2'-0"

TENSION PILES

TENSION PILES

TENSION PILES

3 SPACES @ 12'-0" = 36'-0"

3 SPACES @ 16'-0" = 48'-0"

3 SPACES @ 16'-0" = 48'-0"

3 SPACES @ 12'-0" = 36'-0"

TRANSVERSE SHEET PILING 248'-0"

CUTOFF SHEET PILING

434'-0" GATEBAY MODULE

446'-0" CHAMBER MODULE

MODULE JOINT

DETAIL 2 (24A 24B)

DETAIL 1 (24A 24B)

RIVER SIDE

A B

PILE LAYOUT

SCALE: 1"=30'

C/L CHANNEL AND LOCK

TENSION PILES SETTING PADS TOP OF PILE EL. -56.0

1V ON 3H EL.-61.0 1V ON 4H

EL.-216.0

SECTION (A)

SCALE: 1"=30'

C/L CHANNEL AND LOCK

SETTING PADS TENSION PILES TOP OF PILE EL. -54.0

1V ON 3H EL.-59.0 1V ON 4H

EL.-214.0

SECTION (B)

SCALE: 1"=30'

5 4 3 2

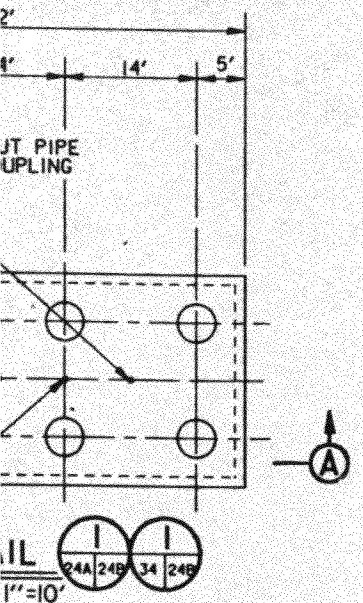

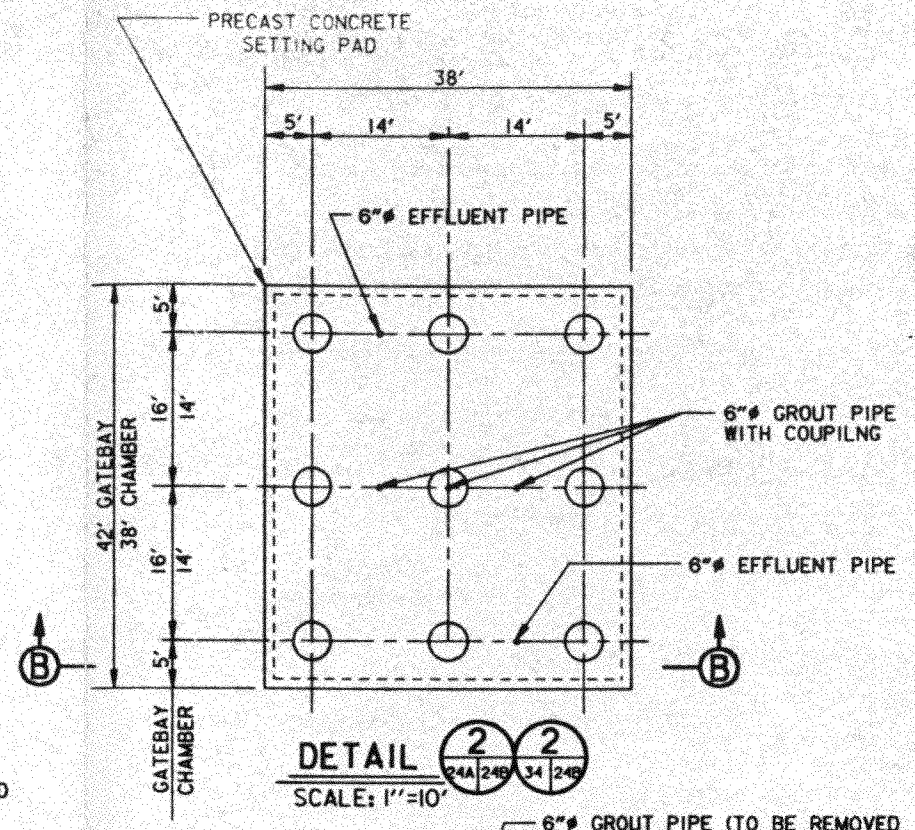

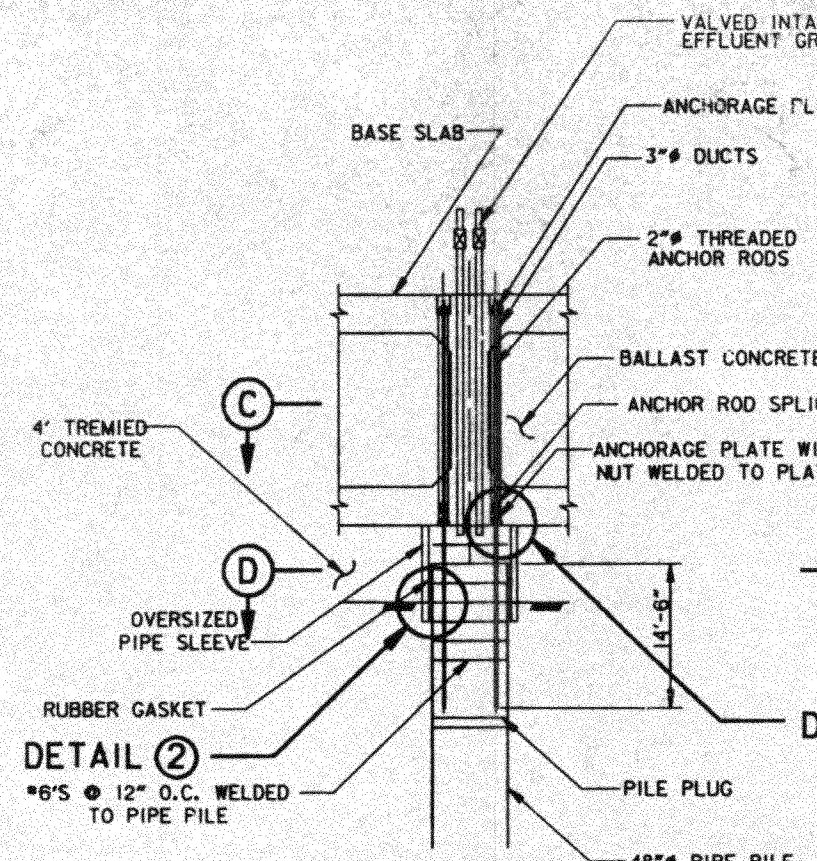

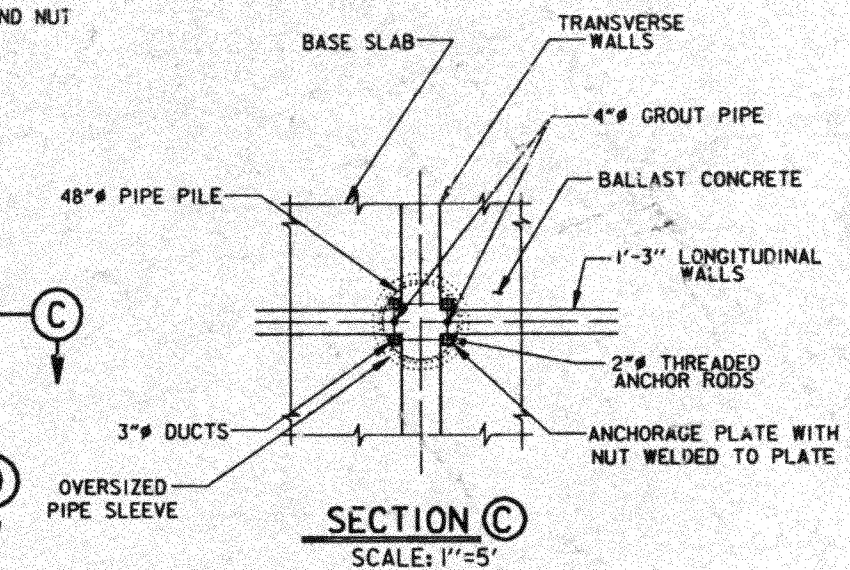

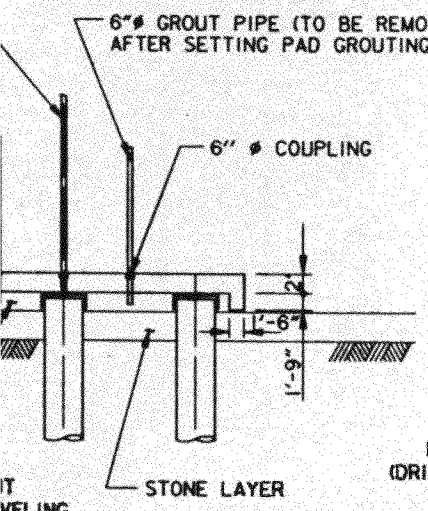

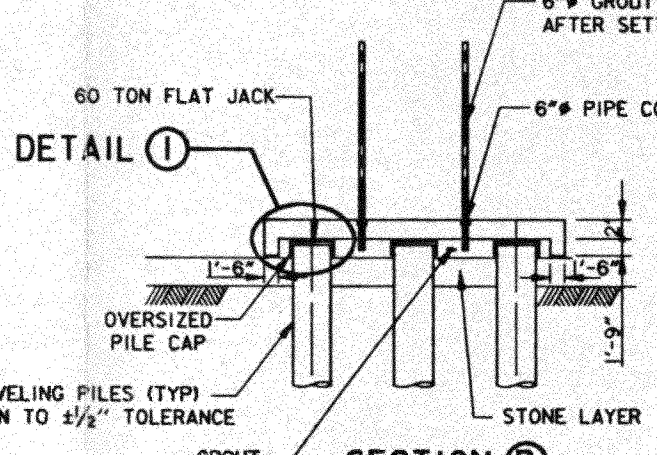

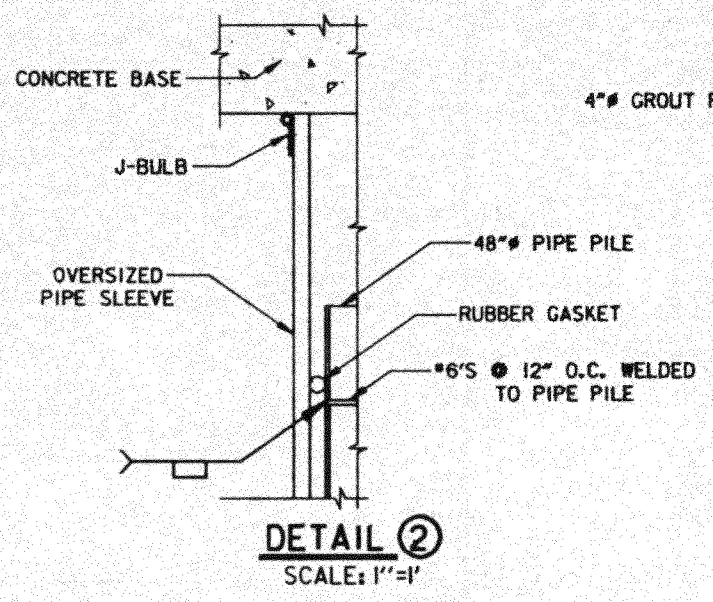

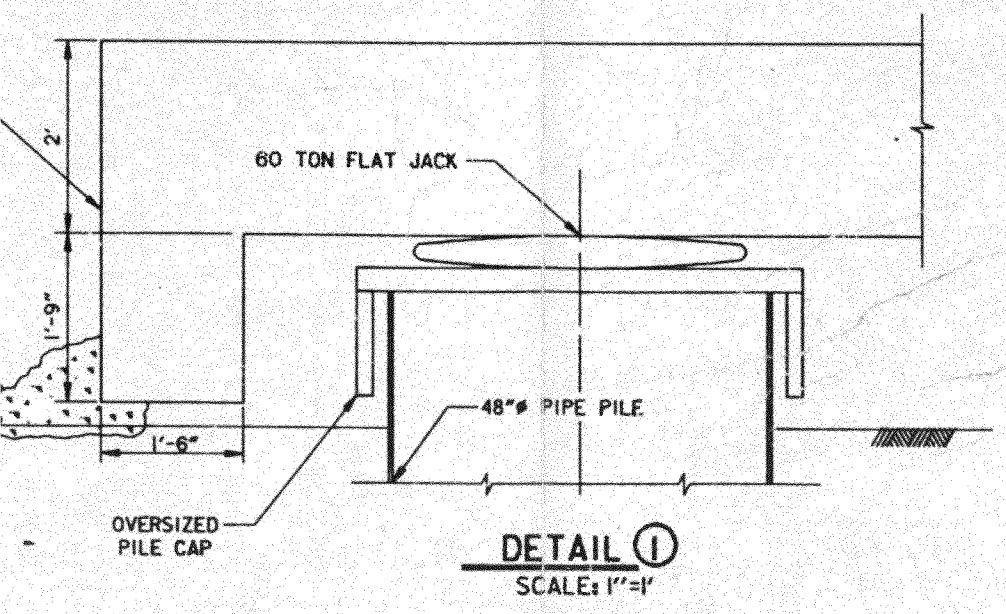

TENSION PILE INSTALLATION PROCEDURES

1. INSTALL THREADED ANCHOR RODS AND ACCESSORIES AT GRAVING SITE
2. DRIVE 48"ø PIPE PILES WITH WELDED REBAR CAGE AND PLUG
3. PLACE OVERSIZED PIPE AND GASKET OVER PIPE PILE
4. SINK MODULE TO PROPER ELEVATION
5. SCREW ANCHOR RODS TO PROPER ELEVATION
6. GROUT ANCHOR RODS INTO PIPE PILE
7. PLACE 4' TREMIED CONCRETE LAYER UNDER MODULE
8. GROUT ANCHOR RODS AT SILL

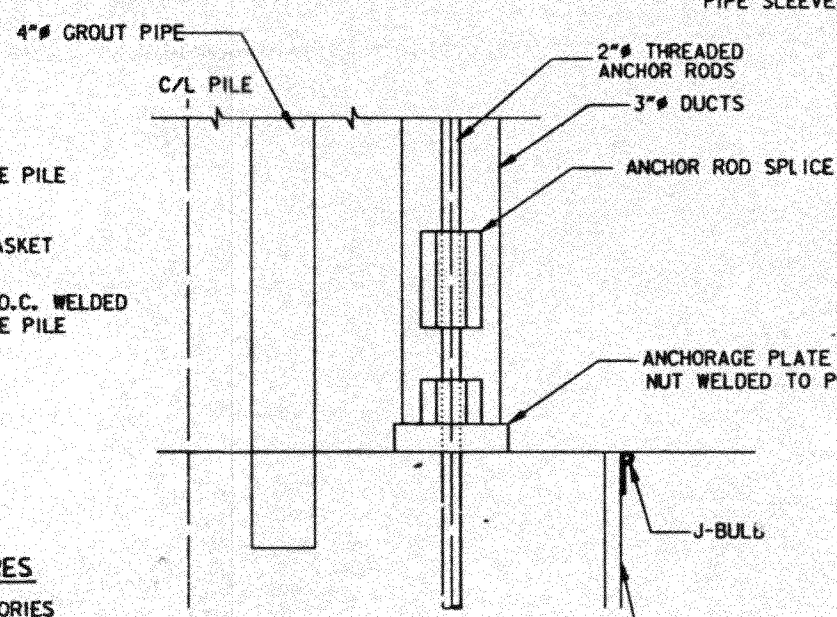



SCALE: 1" = 1'- 0"

12" 0 1' 2' 3' 4' 5'

SCALE: 1" = 5'

5' 0 5' 10' 15' 20'

SCALE: 1" = 10'

10' 0 10' 20' 30' 40'

MISSISSIPPI RIVER - GULF OUTLET
NEW LOCK AND CONNECTING CHANNELS
INDUSTRIAL CANAL LOCK REPLACEMENT
FEASIBILITY STUDY
NORTH OF CLAIBORNE AVE. SITE

SETTING PILE DETAILS
1200' CONCRETE SHIP LOCK

U.S. ARMY ENGINEER DISTRICT, NEW ORLEANS
CORPS OF ENGINEERS
NEW ORLEANS, LOUISIANA

DESIGNED BY: MHG	PLOT SCALE: 360	PLOT DATE: SEPT 1998	CAD FILE: PLATE34B.DGN
DRAWN BY: TMU			FILE NO. H-2-40392
CHECKED BY: MHG	DATE: OCTOBER 1998		

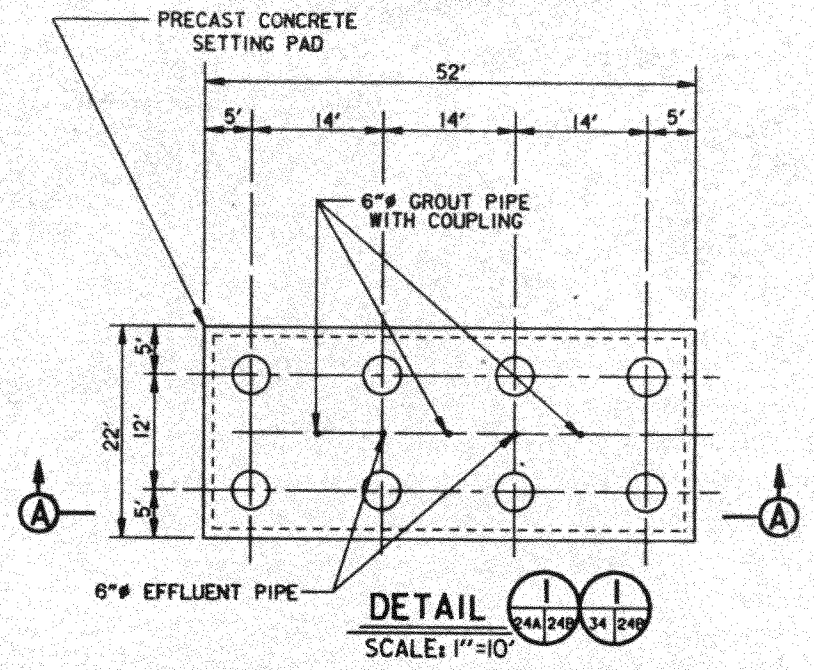

DETAIL 1 (24A 24B 34 24B)
SCALE: 1"=10'

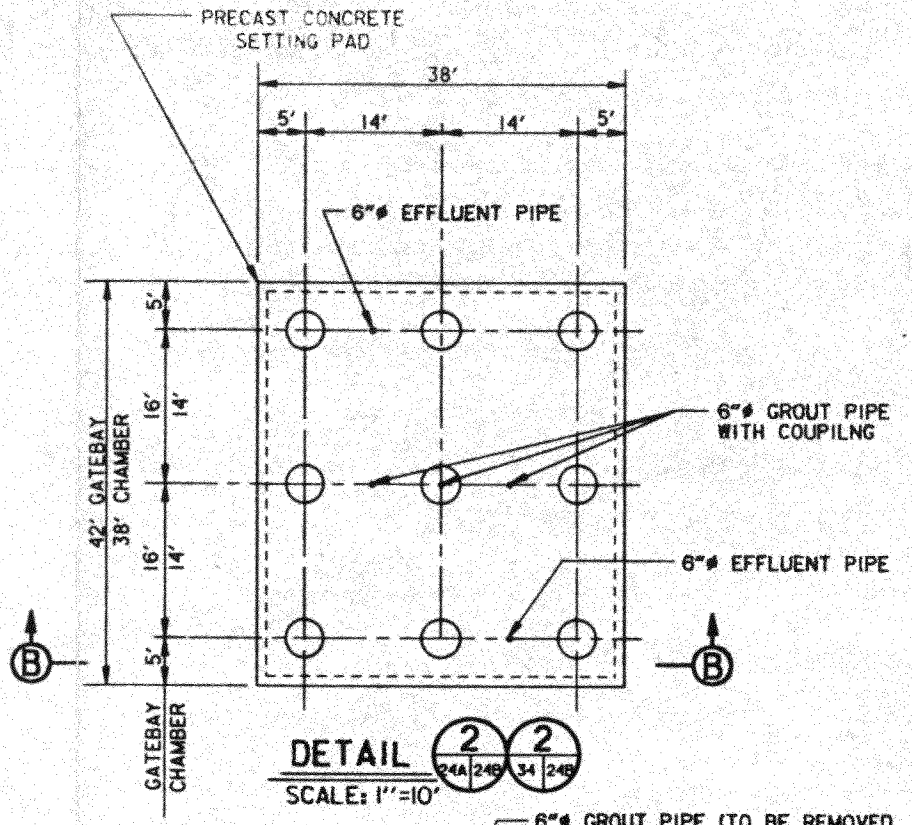

DETAIL 2 (24A 24B 34 24B)
SCALE: 1"=10'

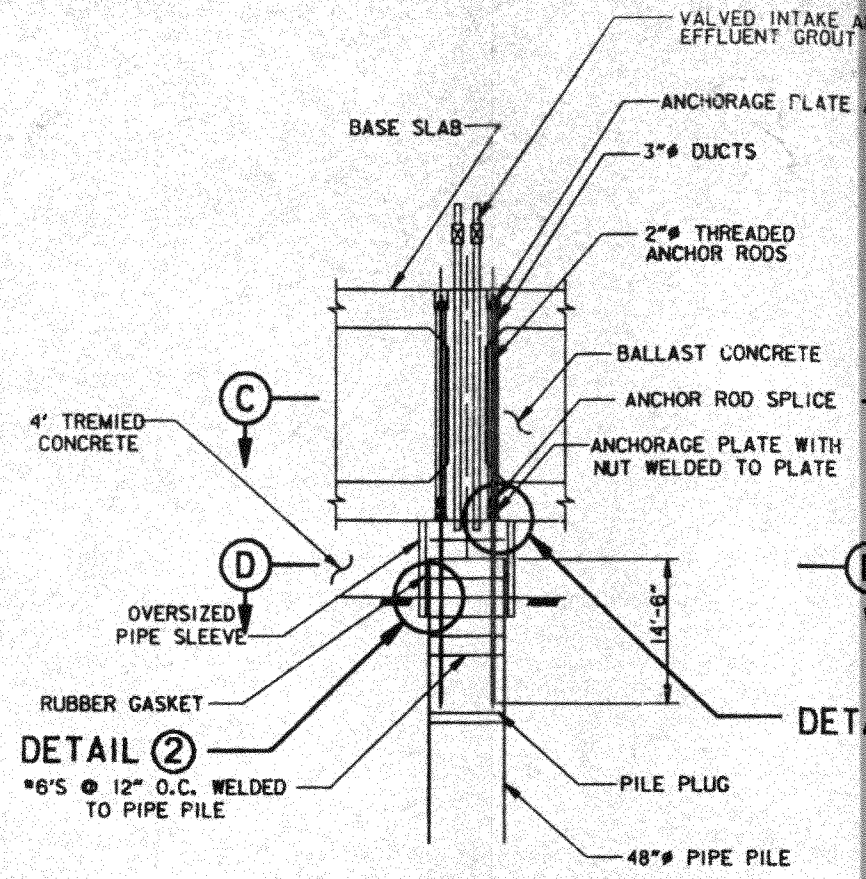

TENSION PILE DETAIL
SCALE: 1"=5'

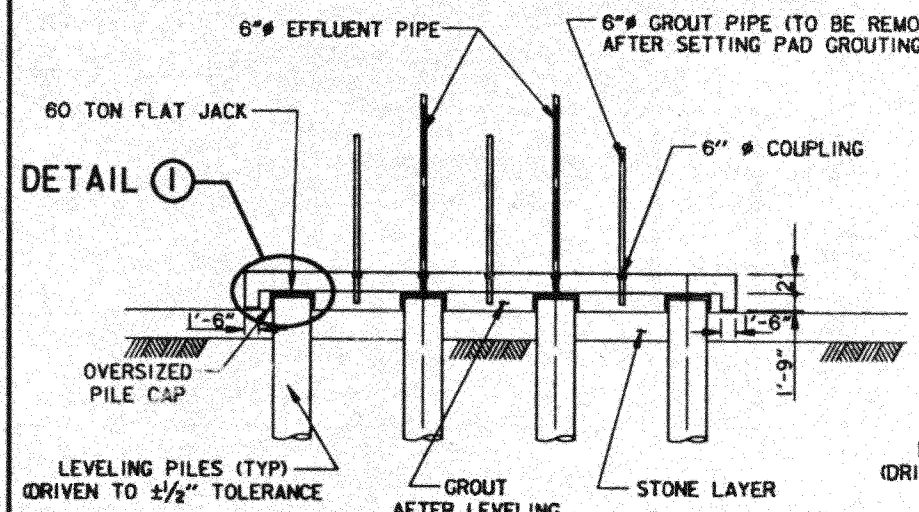

SECTION (A)
SCALE: 1"=10'

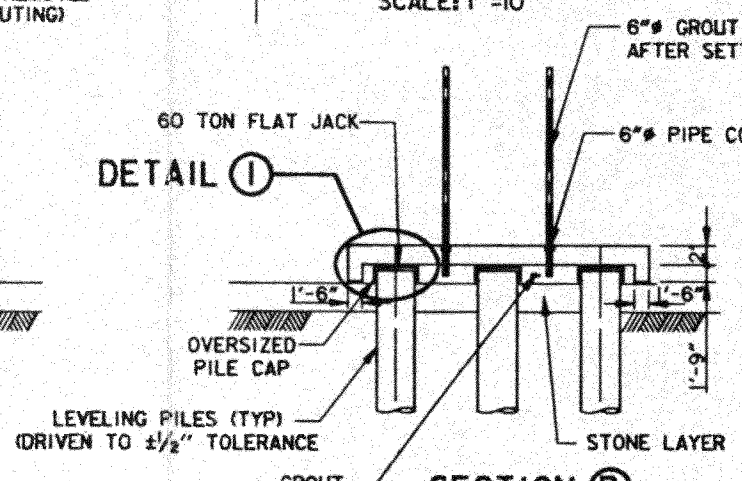

SECTION (B)
SCALE: 1"=10'

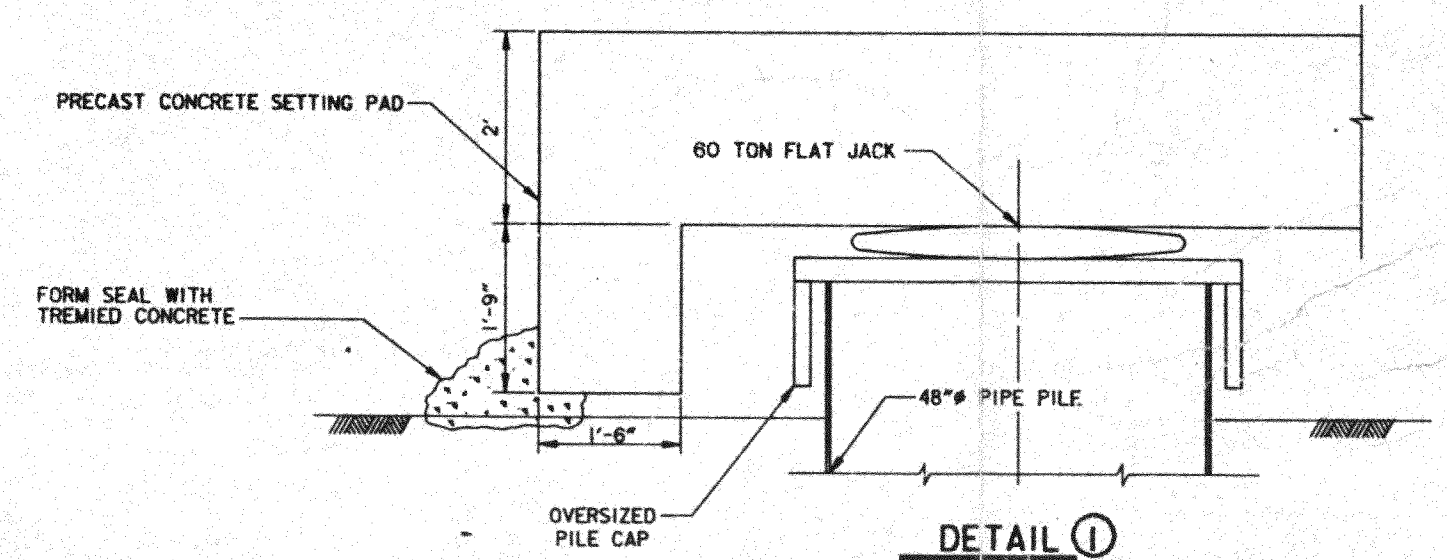

DETAIL (1)
SCALE: 1"=1'

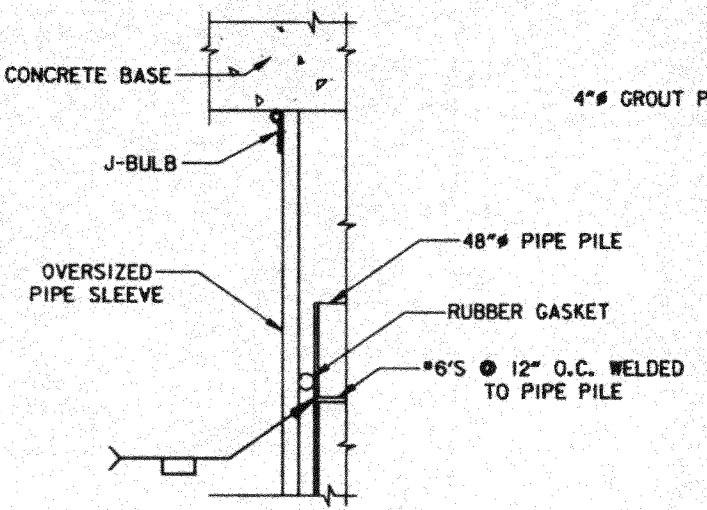

DETAIL (2)
SCALE: 1"=1'

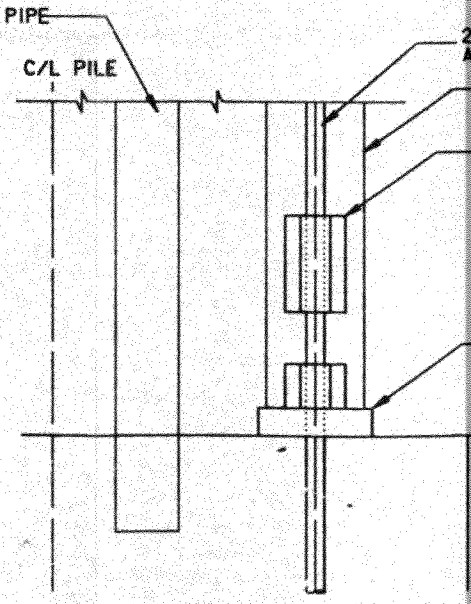

DETAIL (3)
SCALE: 1"=1'

TENSION PILE INSTALLATION PROCEDURES

1. INSTALL THREADED ANCHOR RODS AND ACCESSORIES AT GRAVING SITE
2. DRIVE 48"ø PIPE PILES WITH WELDED REBAR CAGE AND PLUG
3. PLACE OVERSIZED PIPE AND GASKET OVER PIPE PILE
4. SINK MODULE TO PROPER ELEVATION
5. SCREW ANCHOR RODS TO PROPER ELEVATION
6. GROUT ANCHOR RODS INTO PIPE PILE
7. PLACE 4' TREMIED CONCRETE LAYER UNDER MODULE
8. GROUT ANCHOR RODS AT SILL

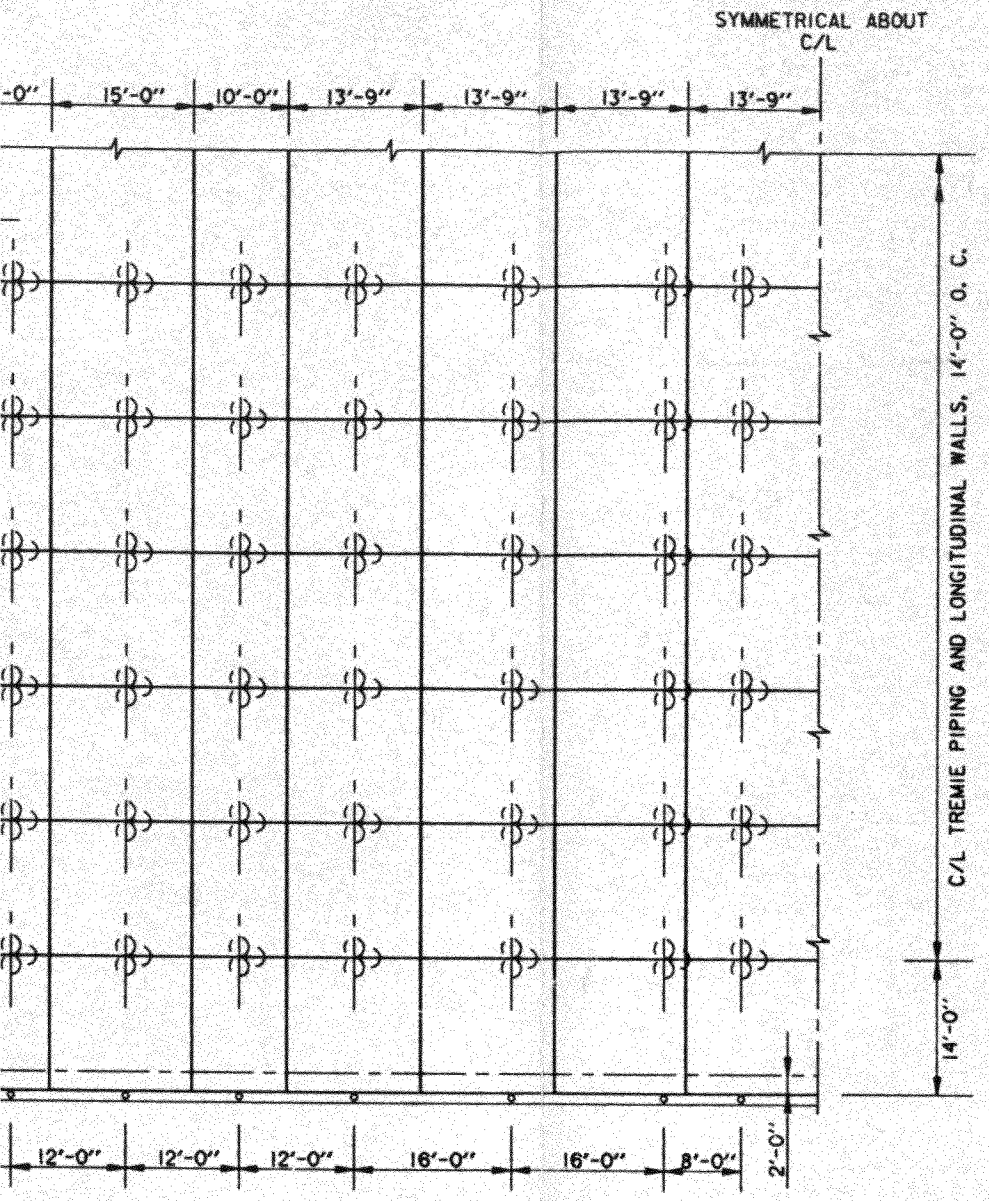

- TREMIE PIPING (GATEBAY MONOLITH) EL. -46.0

(CHAMBER SECTION SIMILAR)

SCALE: 1"=10'

; SYSTEM SHALL BE INSTALLED
EACH PIPE SHALL BE

E (PZ-22) SHALL BE DRIVEN AFTER THE
E. A 4"ø PIPE SHALL BE INSERTED DOWN
PLY TREMIE CONCRETE ALONG THE BASE
CRETE PLACEMENT, THE CONTAINMENT PILING
OVED ABOVE EL. -46.0.

ON SHALL HAVE A SEPERATE
NDS INTO THE PILE CENTER.
CEMENT CAN BE ACCOMPILISHED
TING.

BE CONNECTED TO THE VALVED 6"ø
EMENT SHALL BE VERIFIED BY VOLUME
MATERIAL FLOW THROUGH
THE 8"ø EFFLUENT PIPE.

IS COMPLETED, THE 8"ø EFFLUENT PIPE
ID USED TO PLACE BALLAST CONCRETE.

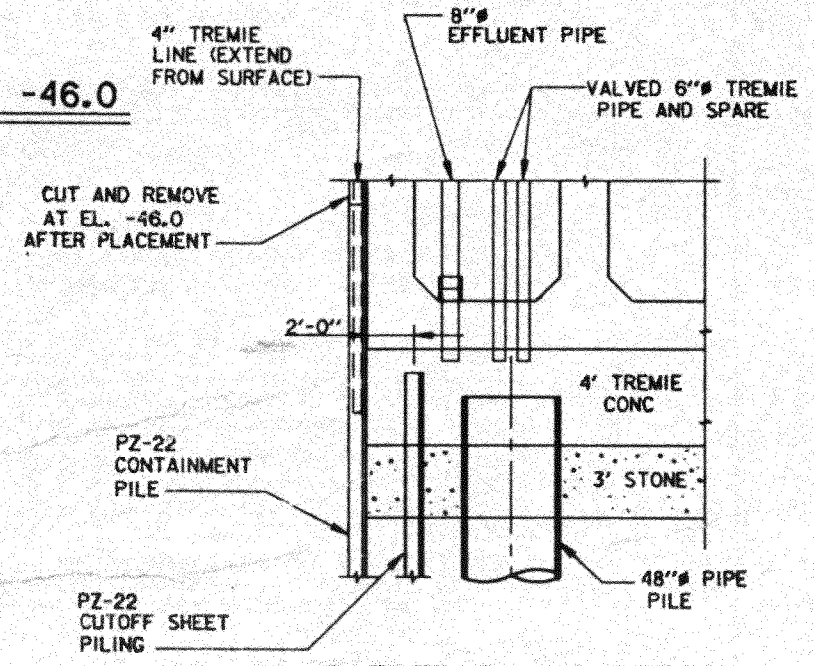

CUTOFF PILING DETAIL

SCALE: 1/4"=1'-0"

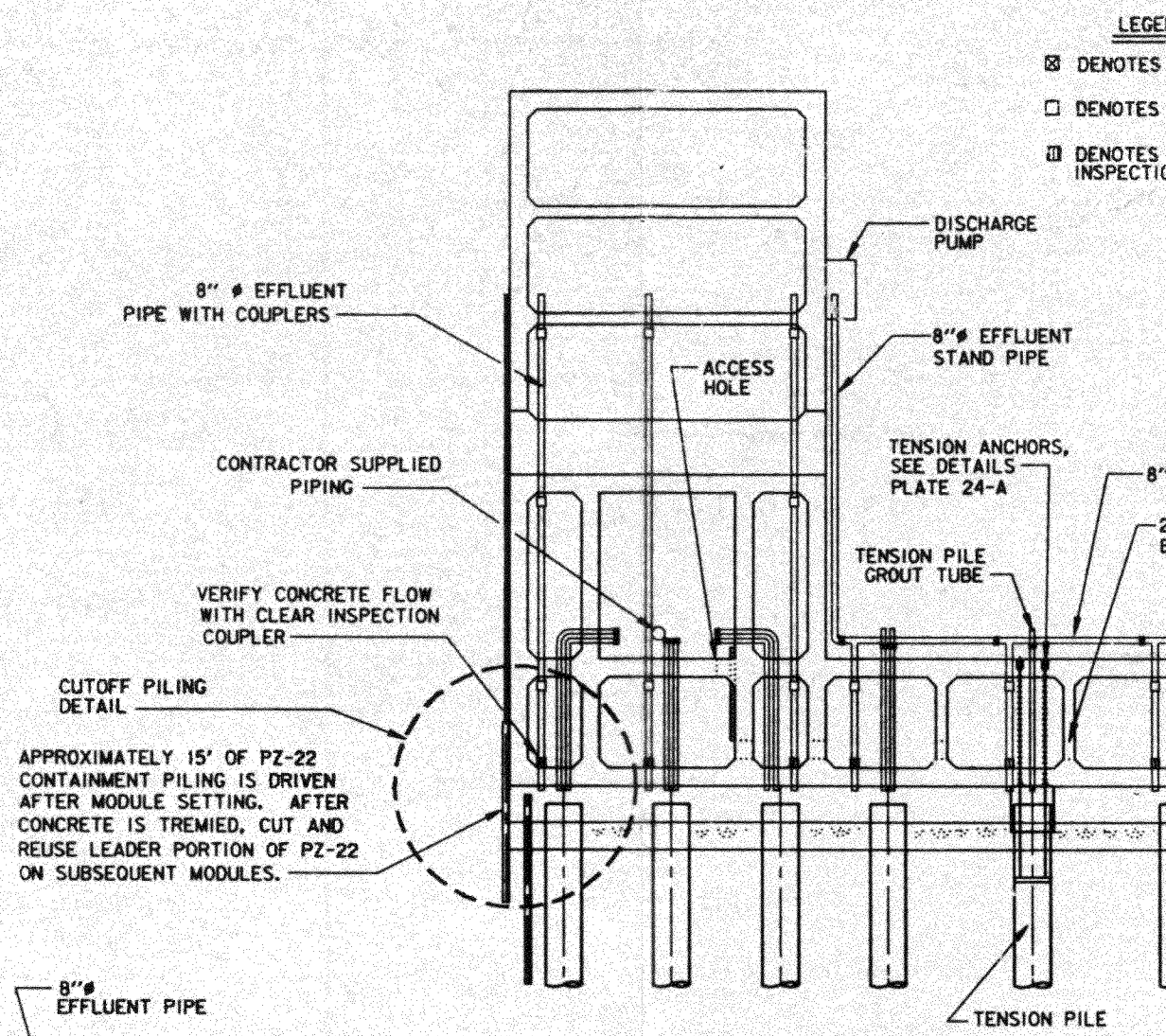

TYPICAL GATEBAY PIPING SYSTEM AT 14' O. C.

(CHAMBER SECTION SIMILAR)

SCALE: 1"=10'

NOTE:
THE 4' VOID SHALL BE FILLED WITH TREMIE CONCRETE CONTAINING SMALL DIAMETER AGGREGATE. THE TENSION PILE AND VOID BENEATH SETTING PADS SHALL BE FILLED WITH A SAND/CEMENT GROUT.

SCALE: 1" = 10'

10' 0 10' 20' 30' 40'

SCALE: 1/4" = 1'-0"

12" 0 5' 10' 15' 20'

MISSISSIPPI RIVER - GULF OUTLET
NEW LOCK AND CONNECTING CHANNELS
INDUSTRIAL CANAL LOCK REPLACEMENT
FEASIBILITY STUDY
NORTH OF CLAIBORNE AVENUE SITE

FOUNDATION PREPARATION
1200' CONCRETE SHIP LOCK

U.S. ARMY ENGINEER DISTRICT, NEW ORLEANS
CORPS OF ENGINEERS
NEW ORLEANS, LOUISIANA

DESIGNED BY: MHG	PLOT SCALE: 120	PLOT DATE: SEPT 96	CADD FILE: PLATE25.DGN
DRAWN BY: RMD			FILE NO. H-2-40392
CHECKED BY: MHG	DATE: OCTOBER 1996		

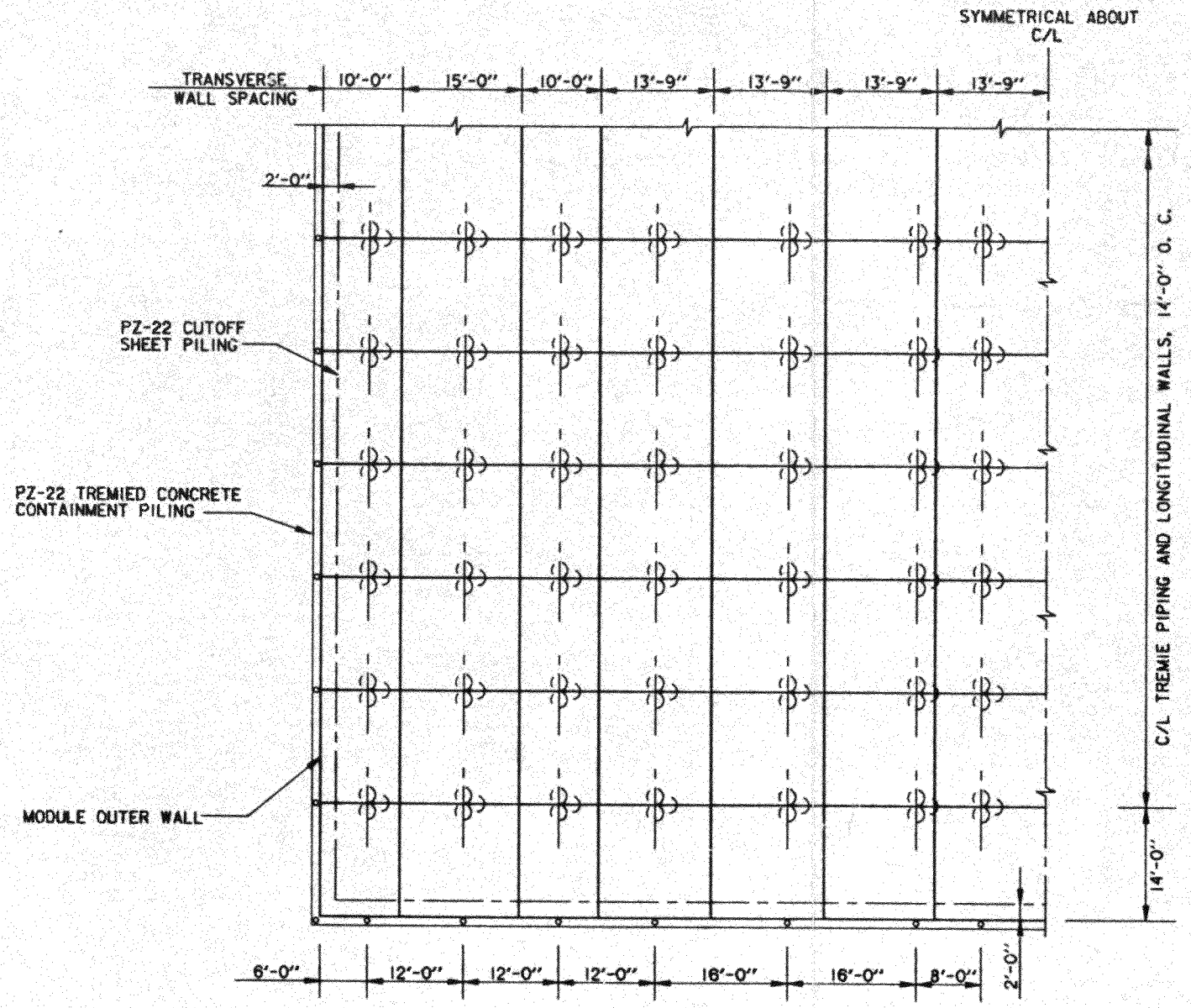

PART PLAN - TREMIE PIPING (GATEBAY MONOLITH) EL. -46.0

(CHAMBER SECTION SIMILAR)

SCALE: 1"=10'

PIPING SYSTEM

1. TREMIE CONCRETE PIPING SYSTEM SHALL BE INSTALLED AT THE GRAVING SITE. EACH PIPE SHALL BE VALVED.
2. CONTAINMENT SHEET PILE (PZ-22) SHALL BE DRIVEN AFTER THE MODULE IS SET IN PLACE. A 4"ø PIPE SHALL BE INSERTED DOWN THE 'PZ' DEPTH TO SUPPLY TREMIE CONCRETE ALONG THE BASE PERIMETER. AFTER CONCRETE PLACEMENT, THE CONTAINMENT PILING SHALL BE CUT AND REMOVED ABOVE EL. -46.0.
3. EACH TENSION CONNECTION SHALL HAVE A SEPERATE GROUT TUBE THAT EXTENDS INTO THE PILE CENTER. ANCHOR AND GROUT PLACEMENT CAN BE ACCOMPILISHED IMMEDIATELY AFTER SETTING.
4. DELIVERY PIPING SHALL BE CONNECTED TO THE VALVED 6"ø PIPES. CONCRETE PLACEMENT SHALL BE VERIFIED BY VOLUME CHECKS AND INSPECTING MATERIAL FLOW THROUGH THE CLEAR COUPLER IN THE 8"ø EFFLUENT PIPE.
5. ONCE TREMIE OPERATION IS COMPLETED, THE 8"ø EFFLUENT PIPE SHALL BE UNCOUPLED AND USED TO PLACE BALLAST CONCRETE.

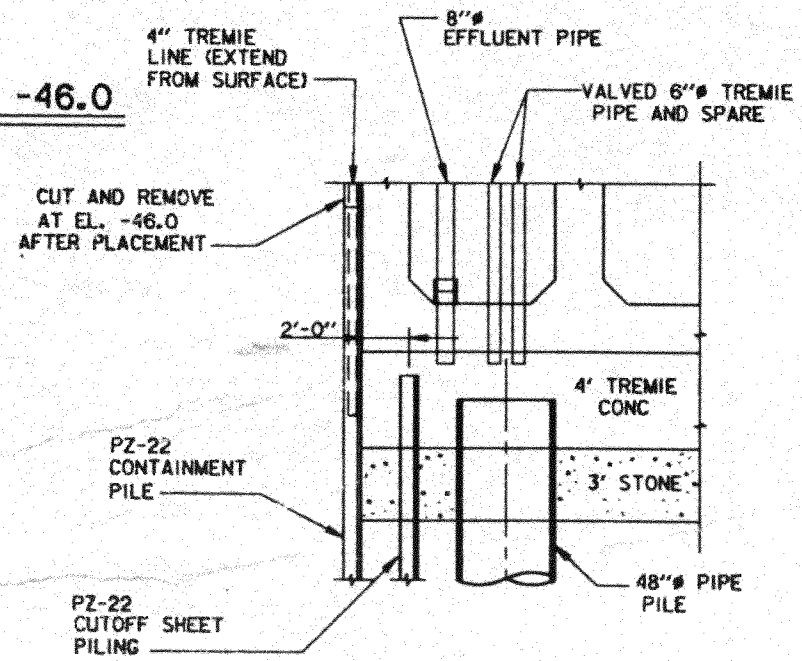

CUTOFF PILING DETAIL

SCALE: 1/4"=1'-0"

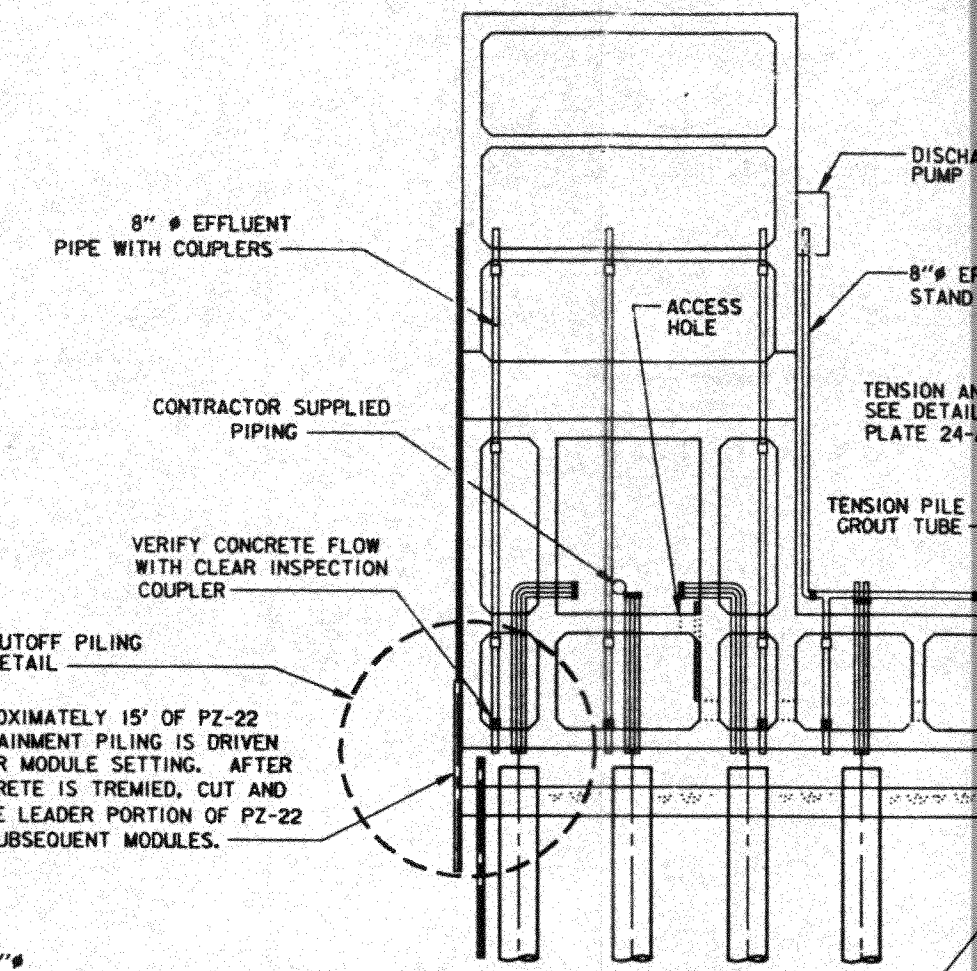

TYPICAL GATEBAY PIPING S

(CHAMBER SECTIO

SCALE: 1"=

NOTE:
THE 4' VOID SHALL BE FILLED WITH TR
CONCRETE CONTAINING SMALL DIAMETER
THE TENSION PILE AND VOID BENEATH S
SHALL BE FILLED WITH A SAND/CEMENT

SCALE: 1" = 10'

10' 0 10' 20'

SCALE: 1/4" = 1'-

12" 0 5' 10'

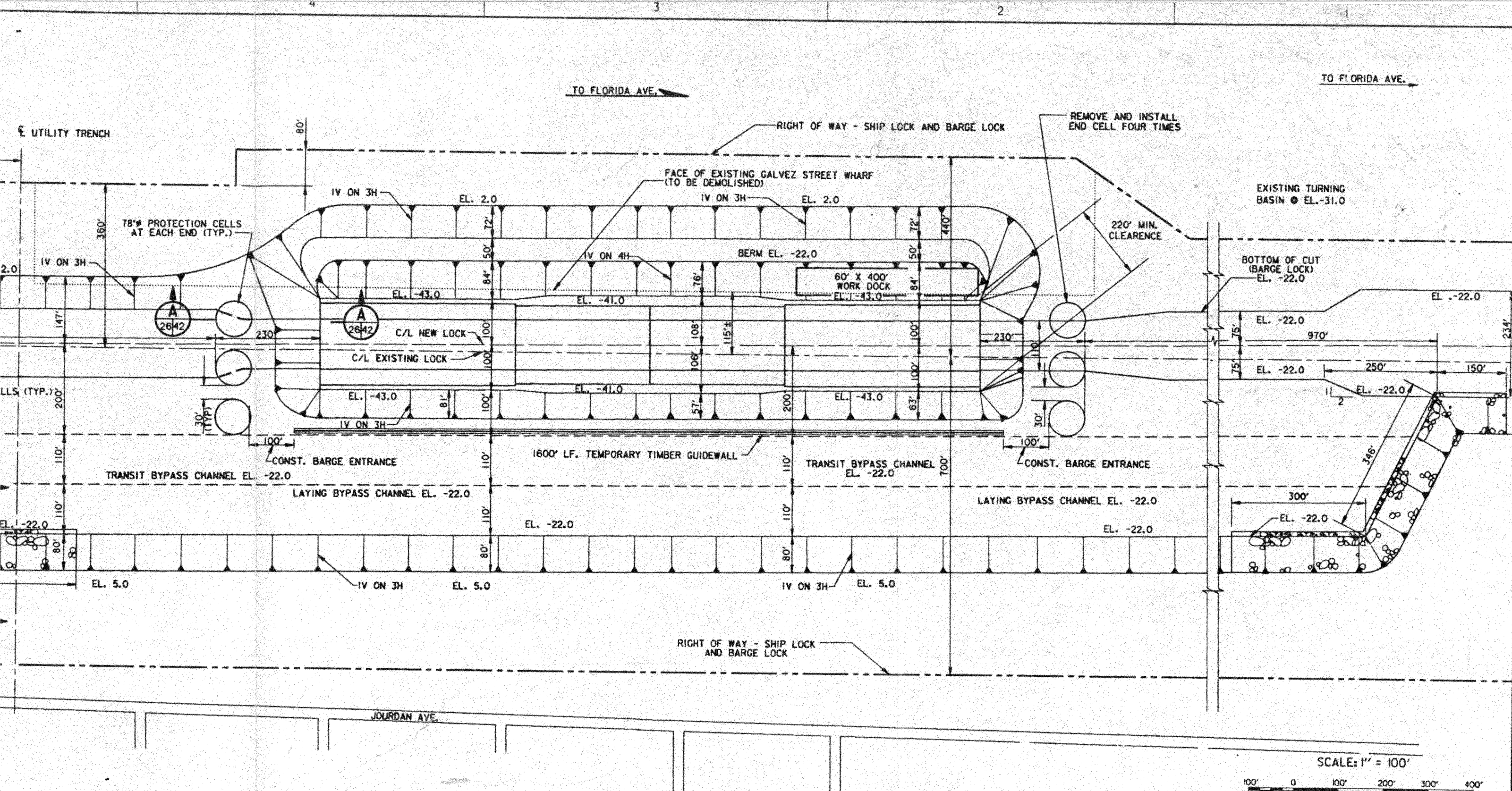

XISTING CHANNEL BOTTOM IS AT 32.0±.

HANNEL BOTTOM ELEV. -22.0 IS MIT THAT SHALL BE MAINTAINED.

RIPRAP GRADATION

% LIGHTER BY WEIGHT	WEIGHT (LBS)
100	2200 - 900
50	930 - 440
15	460 - 130

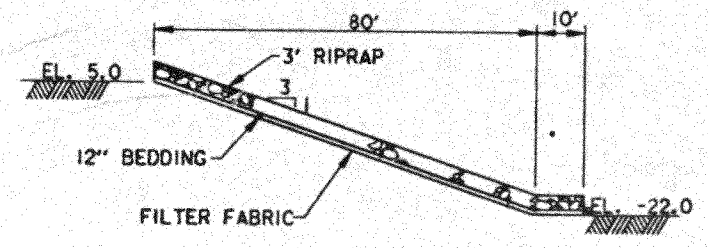

SECTION (B)

SCALE: 1"=20'

MISSISSIPPI RIVER - GULF OUTLET
NEW LOCK AND CONNECTING CHANNELS
INDUSTRIAL CANAL LOCK REPLACEMENT
NORTH OF CLAIBORNE AVENUE SITE
FEASIBILITY STUDY

EXCAVATION PLAN
900' CONCRETE BARGE LOCK

U.S. ARMY ENGINEER DISTRICT, NEW ORLEANS
CORPS OF ENGINEERS
NEW ORLEANS, LOUISIANA

DESIGNED BY: MHG	PLOT SCALE: 1200	PLOT DATE: SEPT 1998	CADD FILE: BARGEB26.DGN	
DRAWN BY: TMU			FILE NO. H-2-40392	
CHECKED BY: MHG	DATE: OCTOBER 1998			

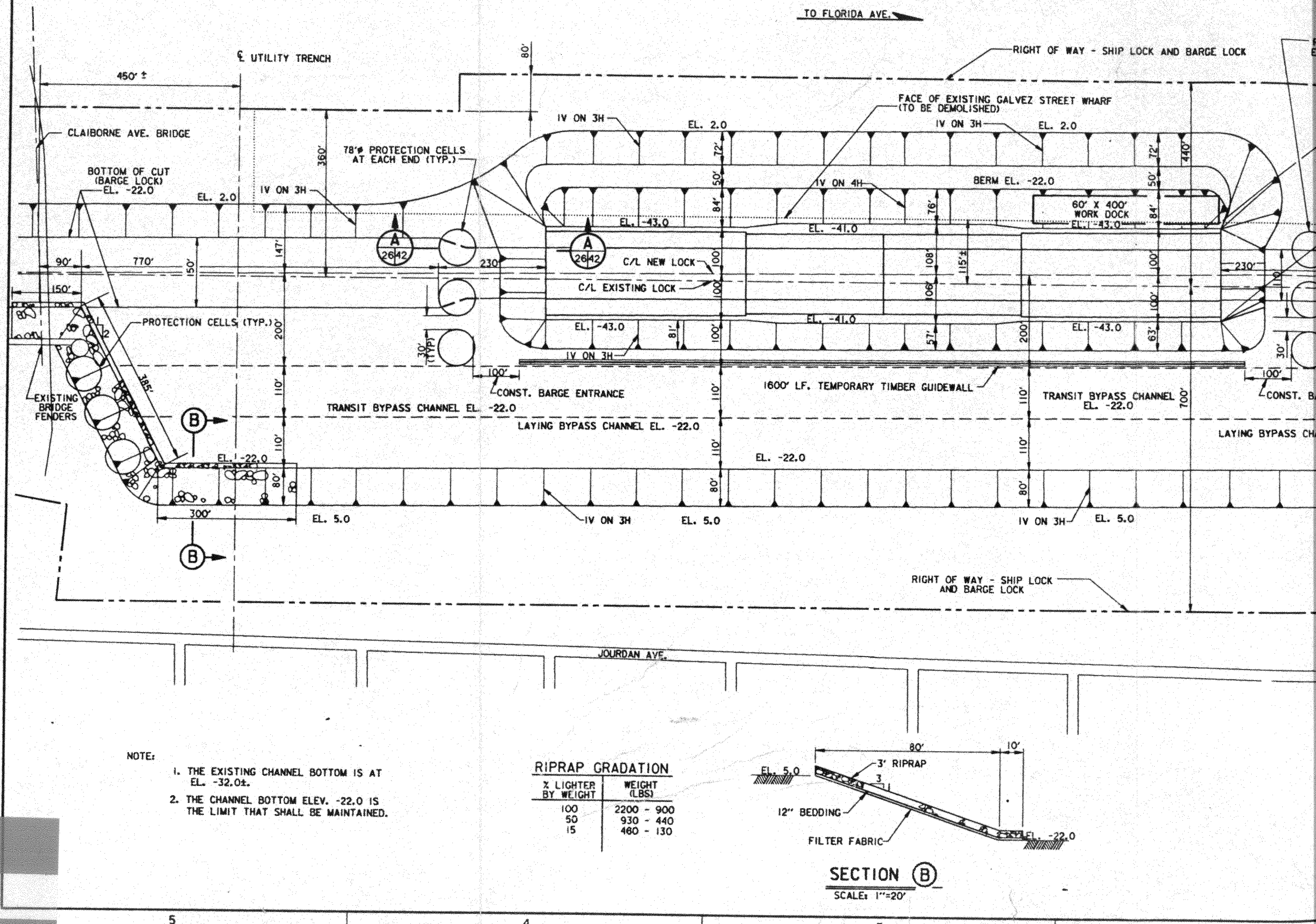

NOTE:

1. THE EXISTING CHANNEL BOTTOM IS AT EL. -32.0±.
2. THE CHANNEL BOTTOM ELEV. -22.0 IS THE LIMIT THAT SHALL BE MAINTAINED.

RIPRAP GRADATION

% LIGHTER BY WEIGHT	WEIGHT (LBS)
100	2200 - 900
50	930 - 440
15	460 - 130

SECTION (B)
SCALE: 1"=20'

RIVER FLOOD PROTECTION

NO FLOOD PROTECTION REQ'D.

EXIST. FLOODWALL TIE-IN

HURRICANE PROTECTION CONTINUES AROUND INLAND PORT

EXISTING FLOODWALL TO BE REMOVED

EL. 18.0
WALL, EL. 22.4

1V ON 3H

EL. 2.0

EL. 2.0±

PEDESTAL CRANE

164'

R.O.W.

18' WIDE ASPHALTIC TWO LANE ROAD WITH 24' BASE

10'

EL. 3.0

EL. 3.0

ROAD EL. 15.0

PARKING

PAINT SHED

1V ON 3H

50' X 75' PRE-FABRICATED MAINTENANCE & ADMIN. BLDG.

1V ON 10H

EL. 2.0

EXISTING FLOODWALL TO BE REMOVED AFTER LAKE SIDE TIE-IN LEVEES ARE COMPLETE

LEVEE CROWN ROAD EL. 8.0

TIE-IN LEVEE/I-WALL
LEVEE CROWN, EL. 8.0
TOP OF FLOODWALL, EL. 14.0

80' BERM, EL. 2.0

1V ON 4H

RIPRAP

EMER. BULKHEAD STORAGE (110'X60')

25' X 45' MACHINERY BLDG. W/EMERGENCY GENERATORS

CONTROL HOUSE 20' X 20'

EL. 10.0

-EL. -22.0

1V ON 3H

SHEET PILING CUTOFF

2'

TOP OF WALL EL. 22.4

CONTROL HOUSE 20' X 20'
& NEW LOCK
FLOOR EL. -22.0

970' C/L PINTLE

CONTROL HOUSE 15' X 15'

900' USABLE LENGTH

110'

SHEET PILING CUTOFF

75'

75'

EL. -22.0

645' FLOATING GUIDE WALL

645' GUIDE WALL

RIPRAP 200'

EL. 10.0

EL. 5.0

ONE LANE, PRECAST CONCRETE ACCESS RAMPS, PILE FOUNDED BENTS @ 19' O.C. (4 SPANS REQ'D PER RAMP)

1V ON 10H

CONTROL HOUSE 15' X 15'

1V ON 4H

EL. 5.0

100' BERM EL. 5.0

TIE-IN LEVEE/I-WALL
LEVEE CROWN EL. 8.0
TOP OF FLOODWALL EL. 14.0

LEVEE CROWN ROAD
80' BERM EL. 5.0

310'

500'

110'

EL. -22.0

1V ON 3H

EL. -22.0

1V ON 3H

EL. 5.0

EL. 5.0

TIE-IN LEVEE
LEVEE CROWN, EL. 15.0
TOP OF FLOODWALL, EL. 22.4

EL. 15.0

EXISTING FLOODWALL TIE-IN

EXISTING LEVEE/I-WALL
LEVEE CROWN, EL. 8.0
TOP OF FLOODWALL, EL. 14.0

R.O.W.

EXISTING FLOODWALL TO BE REMOVED

LEVEE/I-WALL
LEVEE CROWN, EL. 18.0
TOP OF FLOODWALL, EL. 22.4

GATED ACCESS ROAD

EXISTING FLOODWALL TO BE REMOVED AFTER LAKE SIDE TIE-IN LEVEES ARE COMPLETED

GATED ASSESS ROAD

RIVER FLOOD PROTECTION

NO FLOOD PROTECTION REQ'D.

EXISTING HURRICANE PROTECTION TO REMAIN

RIVER SIDE

2' CAPPED F/W

EL. 22.4

15'

EL. 15.0

EL. 12.5

100' BERM

3

1

EL. 5.0

PZ-22
(LEN.=35')

TIP EL. -20.0

EL. 5.0

SECTION (E)

SCALE: 1"=10'

SCALE: 1" = 20'

20' 0 20' 40' 60' 80'

SCALE: 1" = 100'

100' 0 100' 200' 300' 400'

LAKE SIDE

15'

2' CAPPED F/W

EL. 14.0

80' BERM

EL. 8.0

EL. 5.5

EL. 5.0

3

1

4

PZ-22
(LEN.=23')

TIP EL. -15.0

SECTION (D)

SCALE: 1"=10'

CONTROL HOUSES

(2 20' X 20' AND 2 15' X 15')

20'X20' ONE STORY REINFORCED MASONRY BLDG. WITH METAL ROOF SUPPORTED ON OPEN WEB JOISTS. CONTROL HOUSE SHALL INCLUDE STORAGE AREA & RESTROOM FACILITIES.
15X15 ONE STORY MASONRY BLDG. WITHOUT STORAGE AND RESTROOM FACILITIES; LOCK CONTROLS ONLY.

MAINTENANCE & ADMINISTRATION BLDG.

TWO STORY 50'X75' PRE-FABRICATED RIGID STEEL FRAME ON A TIMBER PILE FOUNDED 8" SLAB. GABLE ROOF SHALL BE SUPPORTED BY PURLINS; WALL ENCLOSURES SHALL BE INSULATED 22 GUAGE METAL PANELS. FIRST FLOOR 14', 2ND FLR 8'.

MACHINERY BUILDING WITH EMERGENCY GENERATORS

25'X45' CLEAR SPAN MACHINERY BUILDING WHICH INCLUDES EMERGENCY GENERATORS. BLDG. SHALL BE REINFORCED MASONRY LOCATED ON LOCK WALL. METAL ROOF SUPPORTED ON OPEN WEB JOISTS. ONE STORY, 14' CEILING.

MISSISSIPPI RIVER - GULF OUTLET
NEW LOCK AND CONNECTING CHANNELS
INDUSTRIAL CANAL LOCK REPLACEMENT
FEASIBILITY STUDY
NORTH OF CLAIBORNE AVENUE SITE

PLAN
900' CONCRETE BARGE LOCK

U.S. ARMY ENGINEER DISTRICT, NEW ORLEANS
CORPS OF ENGINEERS
NEW ORLEANS, LOUISIANA

DESIGNED BY: MHG	PLOT SCALE: 1200	PLOT DATE: JULY 96	CADD FILE: BARGE01.DGN
DRAWN BY: TMU			FILE NO. H-2-40392
CHECKED BY: MHG	DATE: OCTOBER 1996		

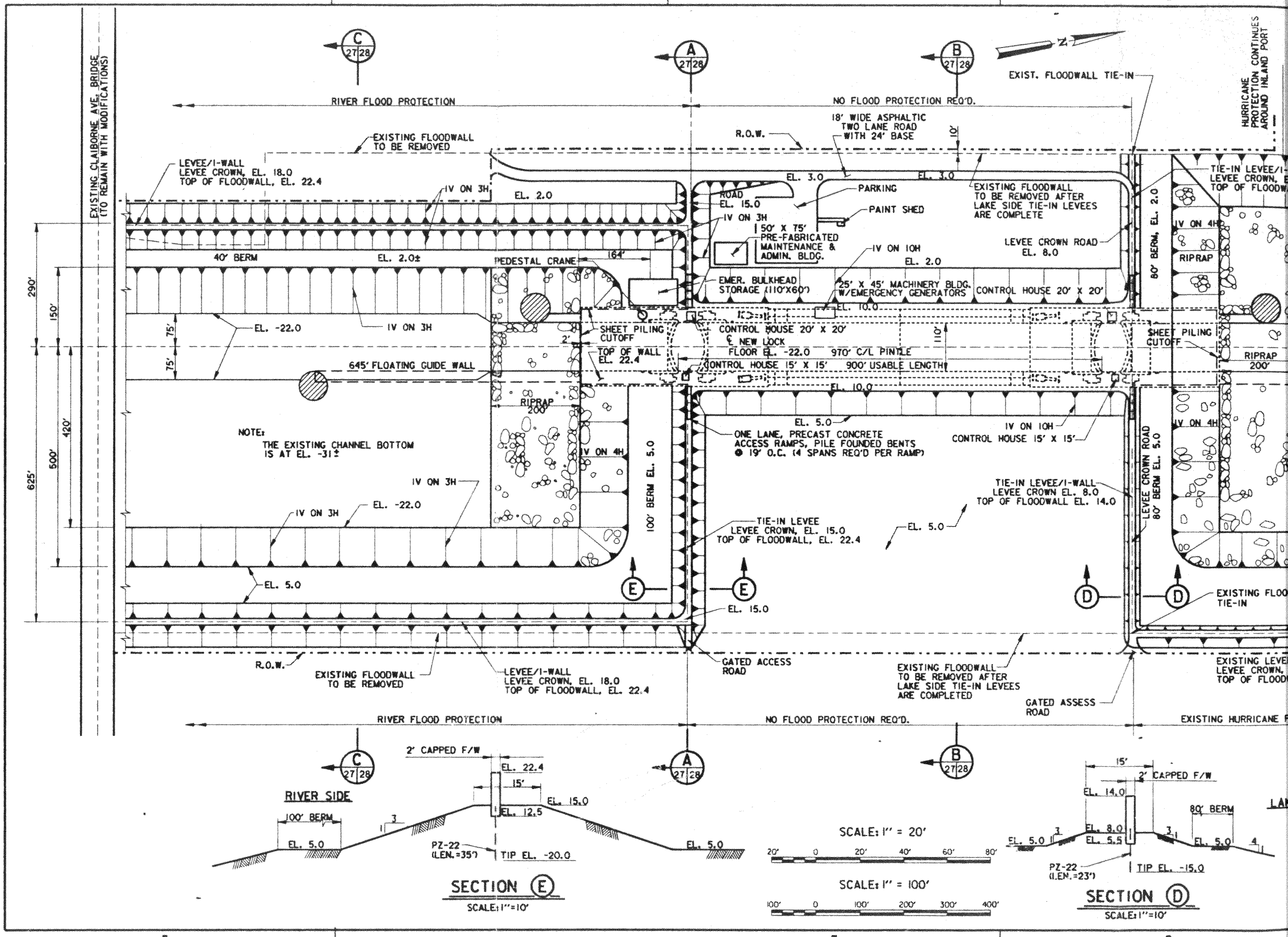

RIVER FLOOD PROTECTION
NO FLOOD PROTECTION REQ'D.
EXIST. FLOODWALL TIE-IN
HURRICANE PROTECTION CONTINUES AROUND INLAND PORT
EXISTING CLAIBORNE AVE. BRIDGE (TO REMAIN WITH MODIFICATIONS)
EXISTING FLOODWALL TO BE REMOVED
LEVEE/I-WALL LEVEE CROWN, EL. 18.0 TOP OF FLOODWALL, EL. 22.4
R.O.W.
18' WIDE ASPHALTIC TWO LANE ROAD WITH 24' BASE
EL. 3.0
PARKING
PAINT SHED
ROAD EL. 15.0
EXISTING FLOODWALL TO BE REMOVED AFTER LAKE SIDE TIE-IN LEVEES ARE COMPLETE
50' X 75' PRE-FABRICATED MAINTENANCE & ADMIN. BLDG.
LEVEE CROWN ROAD EL. 8.0
40' BERM
EL. 2.0±
PEDESTAL CRANE
164'
EMER. BULKHEAD STORAGE (110'X60')
25' X 45' MACHINERY BLDG. W/EMERGENCY GENERATORS
CONTROL HOUSE 20' X 20'
80' BERM, EL. 2.0
RIPRAP
EL. -22.0
SHEET PILING CUTOFF
TOP OF WALL EL. 22.4
CONTROL HOUSE 20' X 20'
℄ NEW LOCK
FLOOR EL. -22.0
970' C/L PINTLE
CONTROL HOUSE 15' X 15'
900' USABLE LENGTH
645' FLOATING GUIDE WALL
RIPRAP 200'
NOTE: THE EXISTING CHANNEL BOTTOM IS AT EL. -31±
ONE LANE, PRECAST CONCRETE ACCESS RAMPS, PILE FOUNDED BENTS @ 19' O.C. (4 SPANS REQ'D PER RAMP)
CONTROL HOUSE 15' X 15'
100' BERM EL. 5.0
TIE-IN LEVEE/I-WALL LEVEE CROWN EL. 8.0 TOP OF FLOODWALL EL. 14.0
TIE-IN LEVEE LEVEE CROWN, EL. 15.0 TOP OF FLOODWALL, EL. 22.4
EL. 5.0
EL. 15.0
GATED ACCESS ROAD
GATED ASSESS ROAD
EXISTING FLOODWALL TO BE REMOVED AFTER LAKE SIDE TIE-IN LEVEES ARE COMPLETED
EXISTING HURRICANE
RIVER SIDE
2' CAPPED F/W
EL. 22.4
EL. 15.0
EL. 12.5
100' BERM
PZ-22 (LEN.=35')
TIP EL. -20.0
SECTION E
SCALE: 1"=10'
SCALE: 1" = 20'
SCALE: 1" = 100'
EL. 14.0
EL. 8.0
EL. 5.5
PZ-22 (LEN.=23')
TIP EL. -15.0
SECTION D
SCALE: 1"=10'

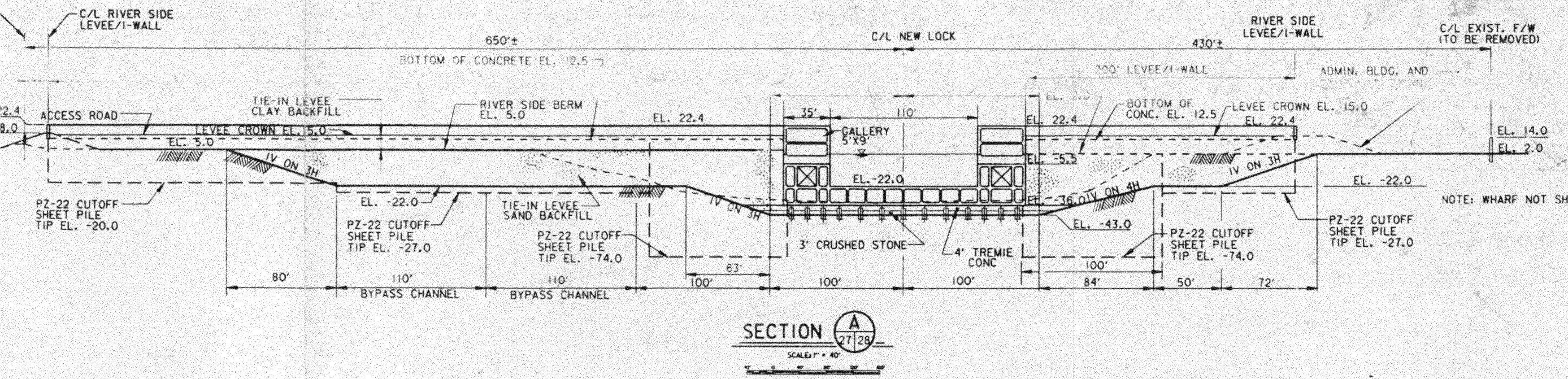

SECTION A 27|28

SCALE: 1" = 40'

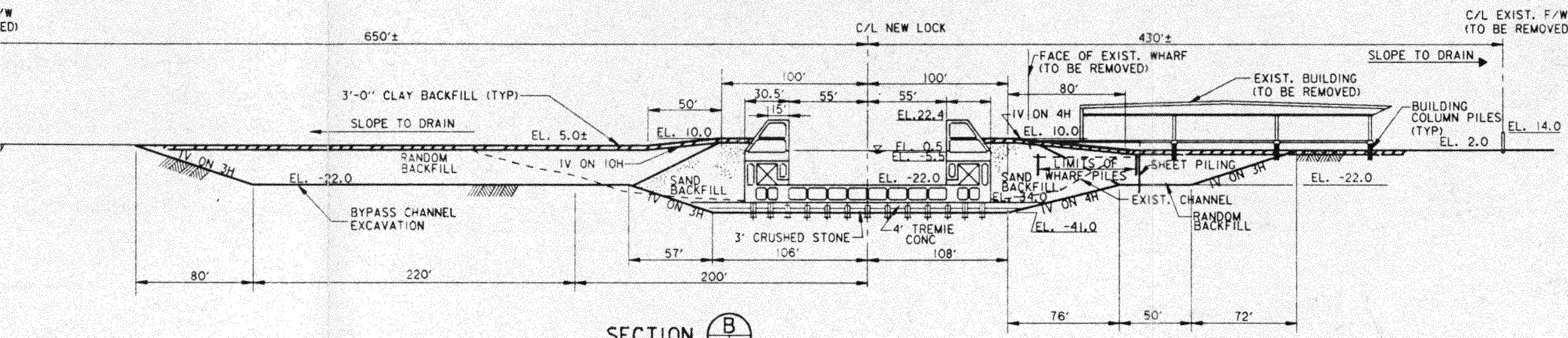

SECTION B 27|28

SCALE: 1" = 40'

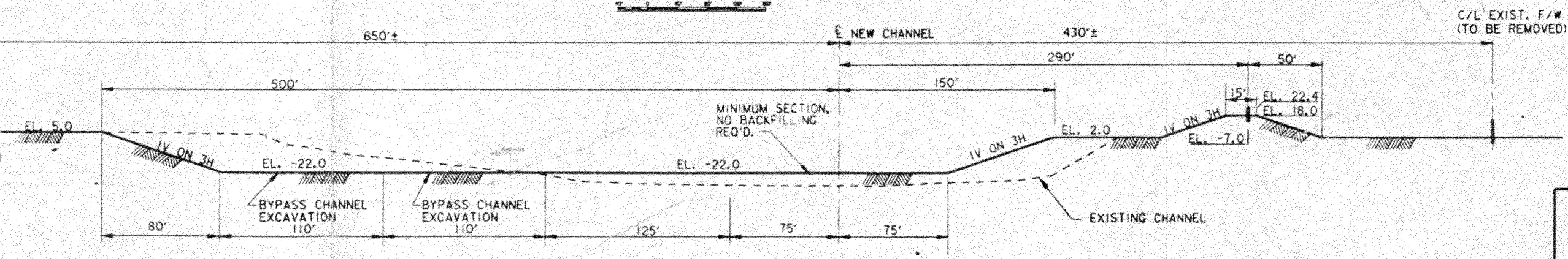

SECTION C 27|28

SCALE: 1" = 40'

SCALE: 1" = 40'

MISSISSIPPI RIVER - GULF OUTLET
NEW LOCK AND CONNECTION CHANNELS
INDUSTRIAL CANAL LOCK REPLACEMENT
FEASIBILITY STUDY
NORTH OF CLAIBORNE AVENUE SITE

CROSS SECTIONS
900' CONCRETE BARGE LOCK

U.S. ARMY ENGINEER DISTRICT, NEW ORLEANS
CORPS OF ENGINEERS
NEW ORLEANS, LOUISIANA

DESIGNED BY: MHG	PLOT SCALE: 480	PLOT DATE: JULY 96	CADD FILE: BARGE28.DGN
DRAWN BY: TMU			FILE NO. H-2-40392
CHECKED BY: MHG	DATE: OCTOBER 1996		

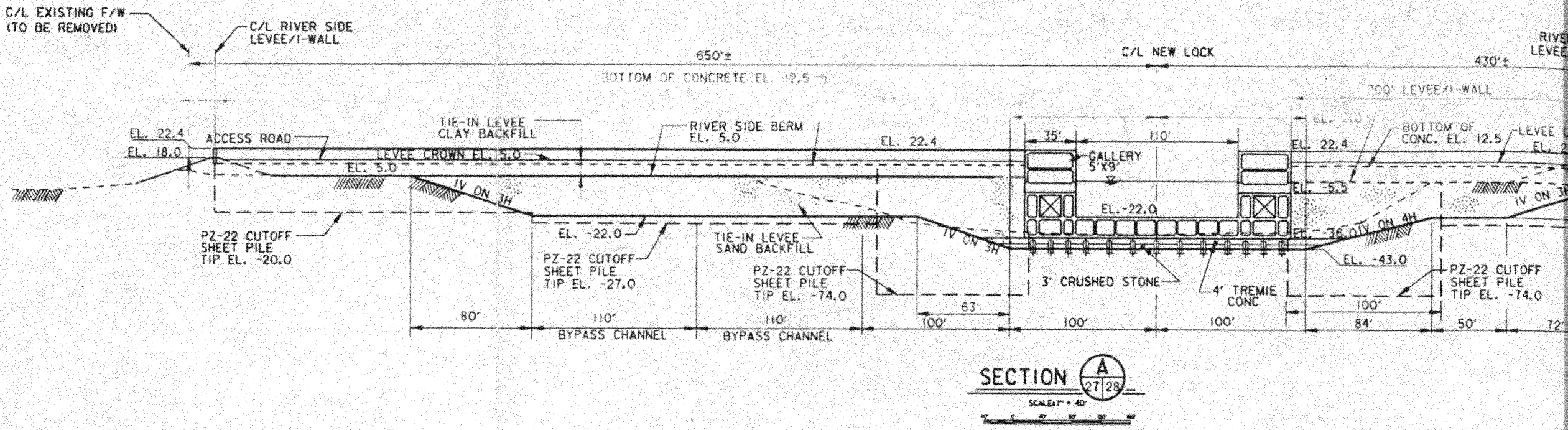

SECTION A 27 28

SCALE: 1" = 40'

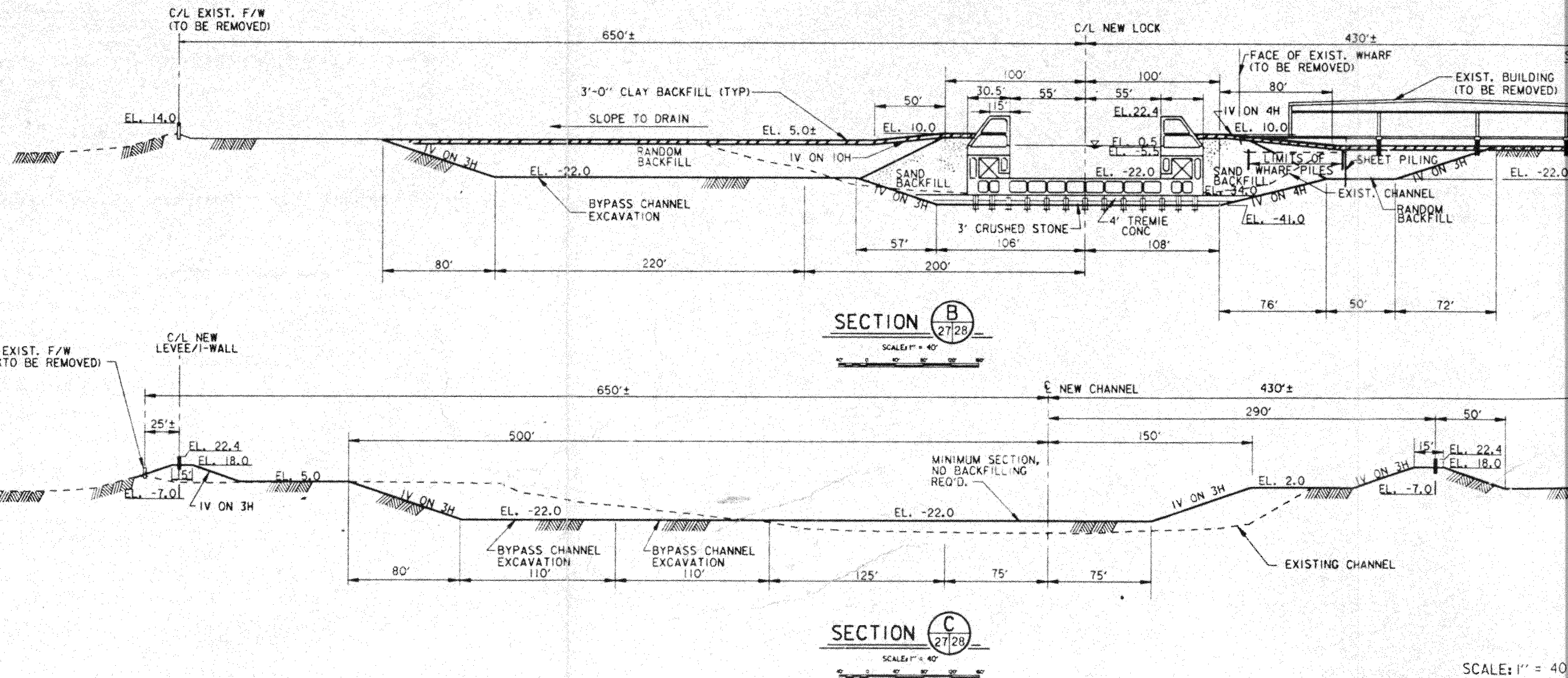

SECTION B 27 28

SCALE: 1" = 40'

SECTION C 27 28

SCALE: 1" = 40'

SCALE: 1" = 40

40' 0 40' 80'

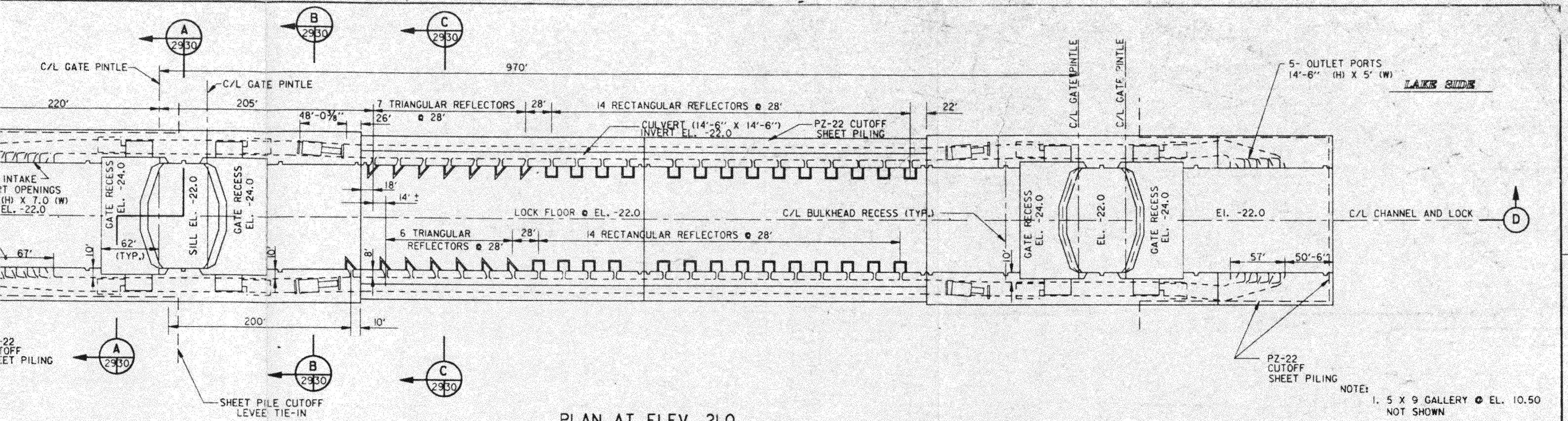

PLAN AT ELEV. 21.0

SCALE: HORIZ. 1"=50'
VERT. 1"=20'

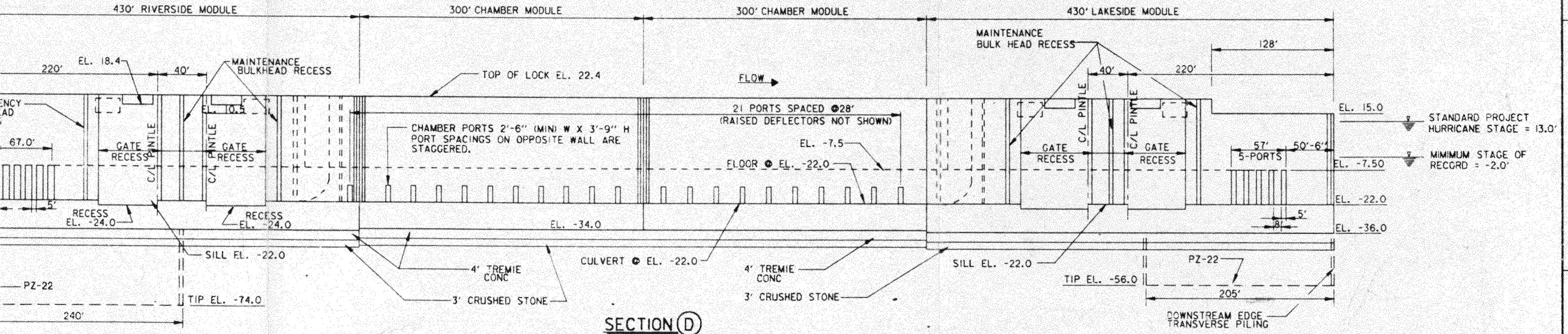

SECTION (D)

FILLING AND EMPTYING SYSTEM

SCALE: HORIZ. 1"=50'
VERT. 1"=20'

SCALE: 1" = 20'

20' 0 20' 40' 60' 80'

SCALE: 1" = 50'

50' 0 50' 100' 150' 200'

MISSISSIPPI RIVER - GULF OUTLET
NEW LOCK AND CONNECTING CHANNELS
INDUSTRIAL CANAL LOCK REPLACEMENT
FEASIBILITY STUDY
NORTH OF CLAIBORNE AVENUE SITE

PLAN AND WALL PROFILES
900' CONCRETE BARGE LOCK

U.S. ARMY ENGINEER DISTRICT, NEW ORLEANS
CORPS OF ENGINEERS
NEW ORLEANS, LOUISIANA

DESIGNED BY: MAG	PLOT SCALE: 600	PLOT DATE: SEPT 96	CADD FILE: BARGE29.DGN
DRAWN BY: TMU			FILE NO. H-2-40392
CHECKED BY: MHG	DATE: OCTOBER 1996		

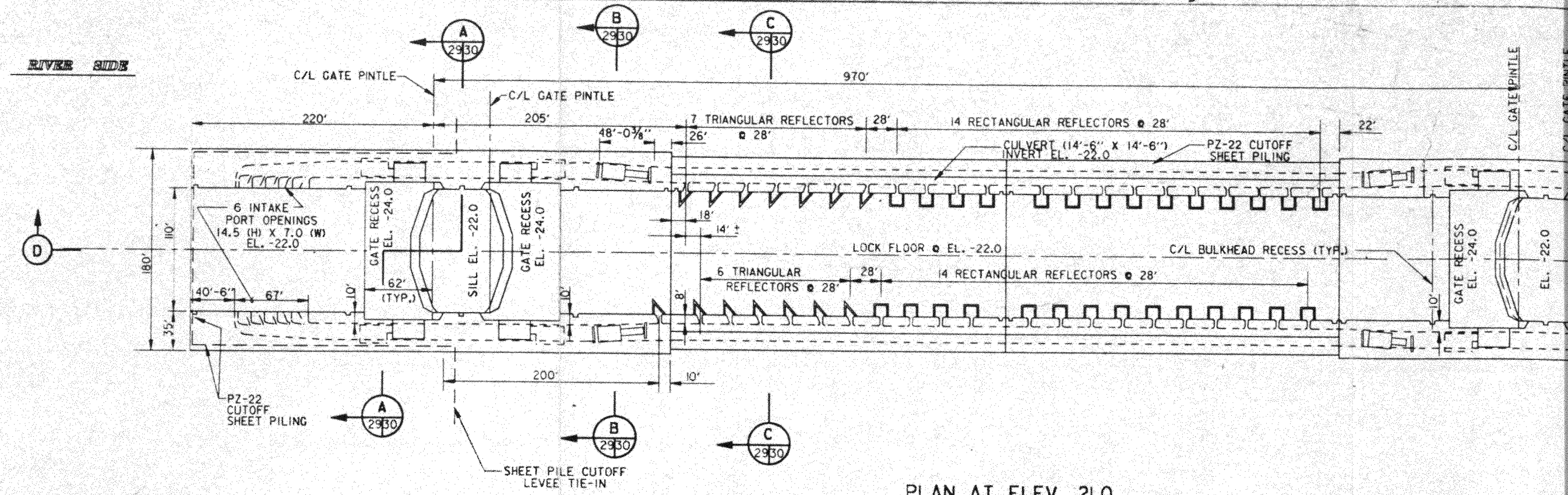

PLAN AT ELEV. 21.0

SCALE: HORIZ. 1"=50'
VERT. 1"=20'

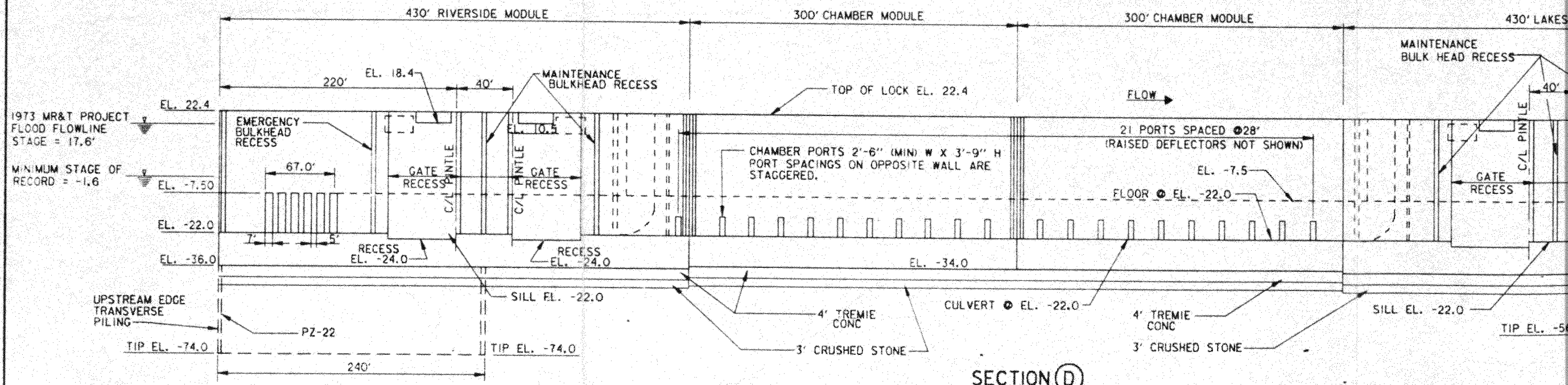

SECTION (D)

FILLING AND EMPTYING SYSTEM

SCALE: HORIZ. 1"=50'
VERT. 1"=20'

SCALE: 1" = 20'

20' 0 20' 40' 60'

SCALE: 1" = 50'

50' 0 50' 100' 150'

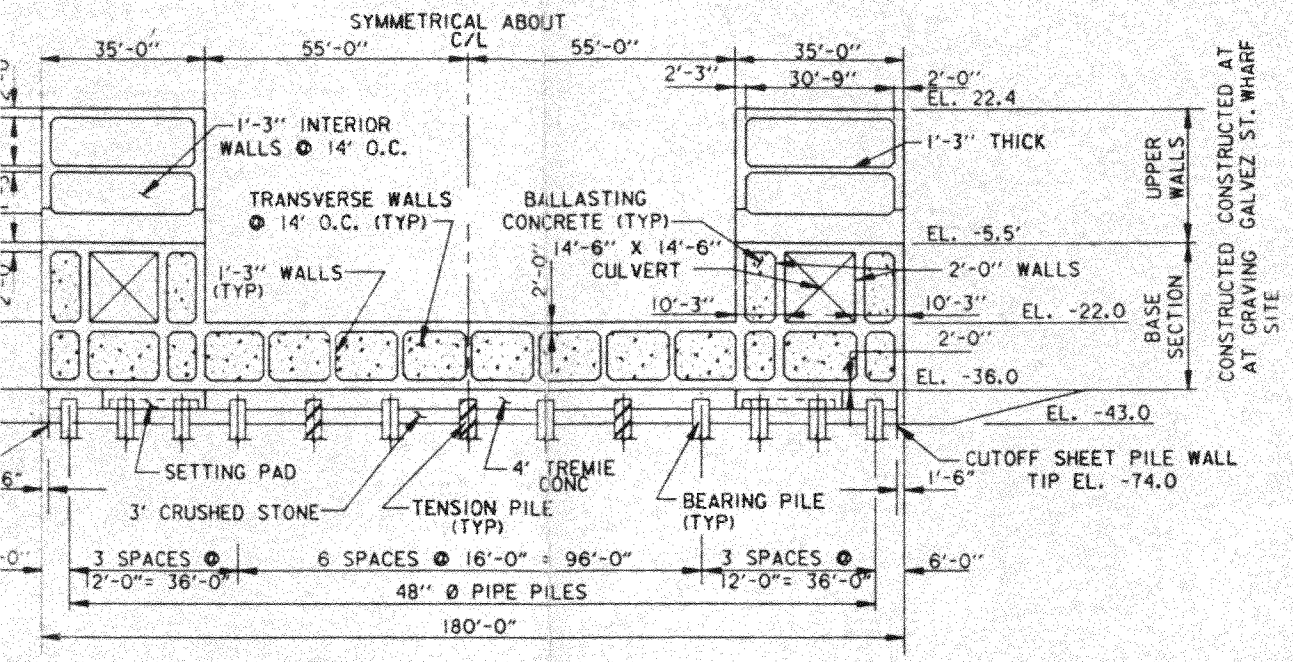

SECTION A (19|20)

SCALE: 1" = 20'

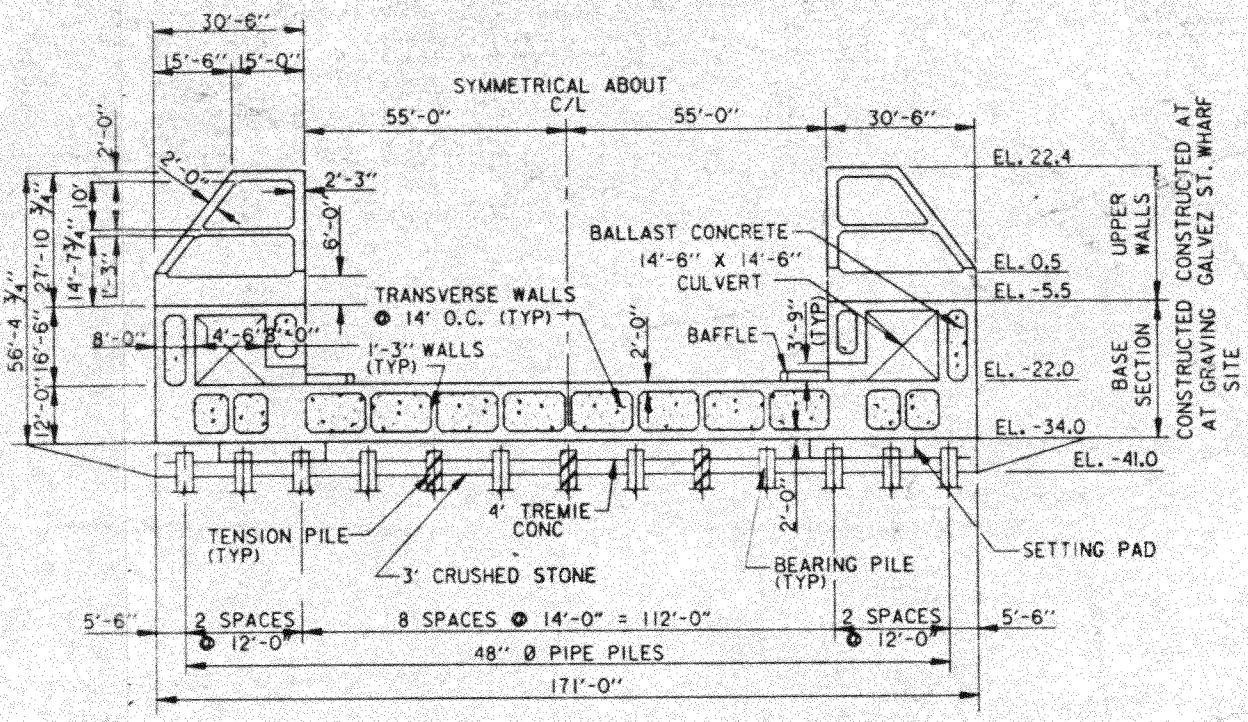

SECTION C (19|20)

SCALE: 1" = 20'

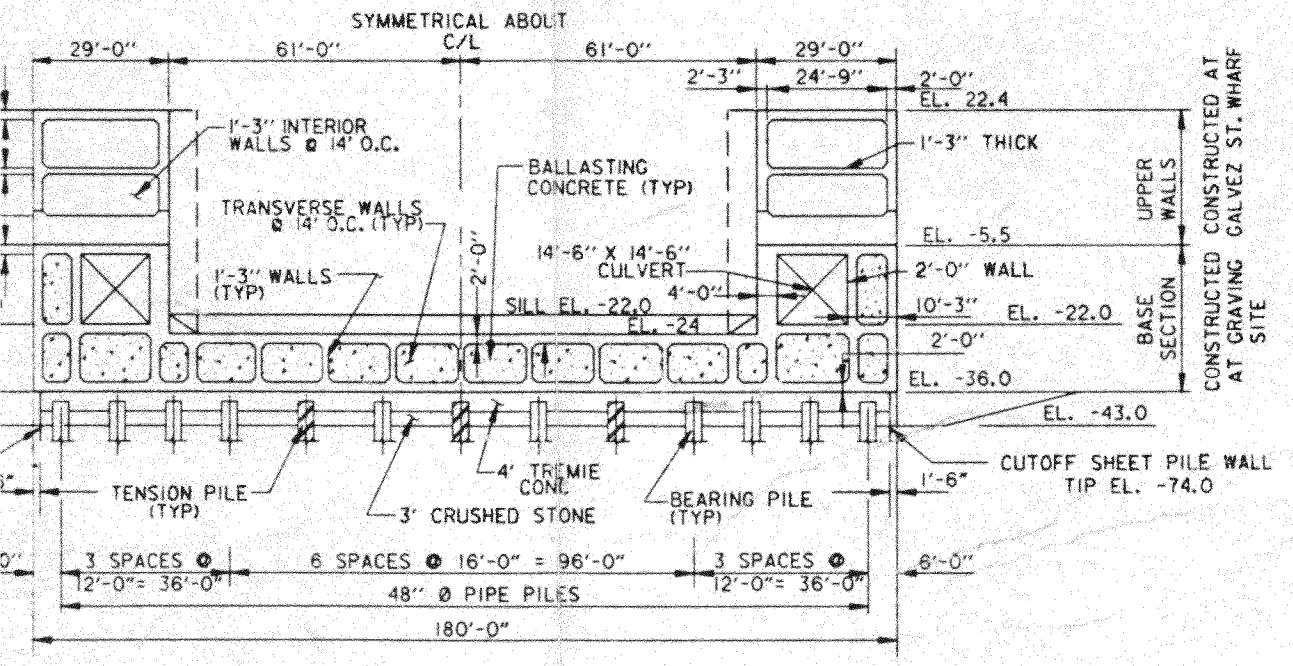

SECTION B (19|20)

SCALE: 1" = 20'

SCALE: 1" = 20'

20' 0 20' 40' 60' 80'

MISSISSIPPI RIVER - GULF OUTLET
NEW LOCK AND CONNECTING CHANNELS
INDUSTRIAL CANAL LOCK REPLACEMENT
FEASIBILITY STUDY
NORTH OF CLAIBORNE AVENUE SITE

SECTIONS AND DETAILS 900' CONCRETE BARGE LOCK

U.S. ARMY ENGINEER DISTRICT, NEW ORLEANS
CORPS OF ENGINEERS
NEW ORLEANS, LOUISIANA

C·A·D

DESIGNED BY: COB	PLOT SCALE: 240	PLOT DATE: JULY 96	CADD FILE: BARGEB3U.dgn
DRAWN BY: TMU & COB			FILE NO. H-2-40392
CHECKED BY: MHG	DATE: OCTOBER 1996		

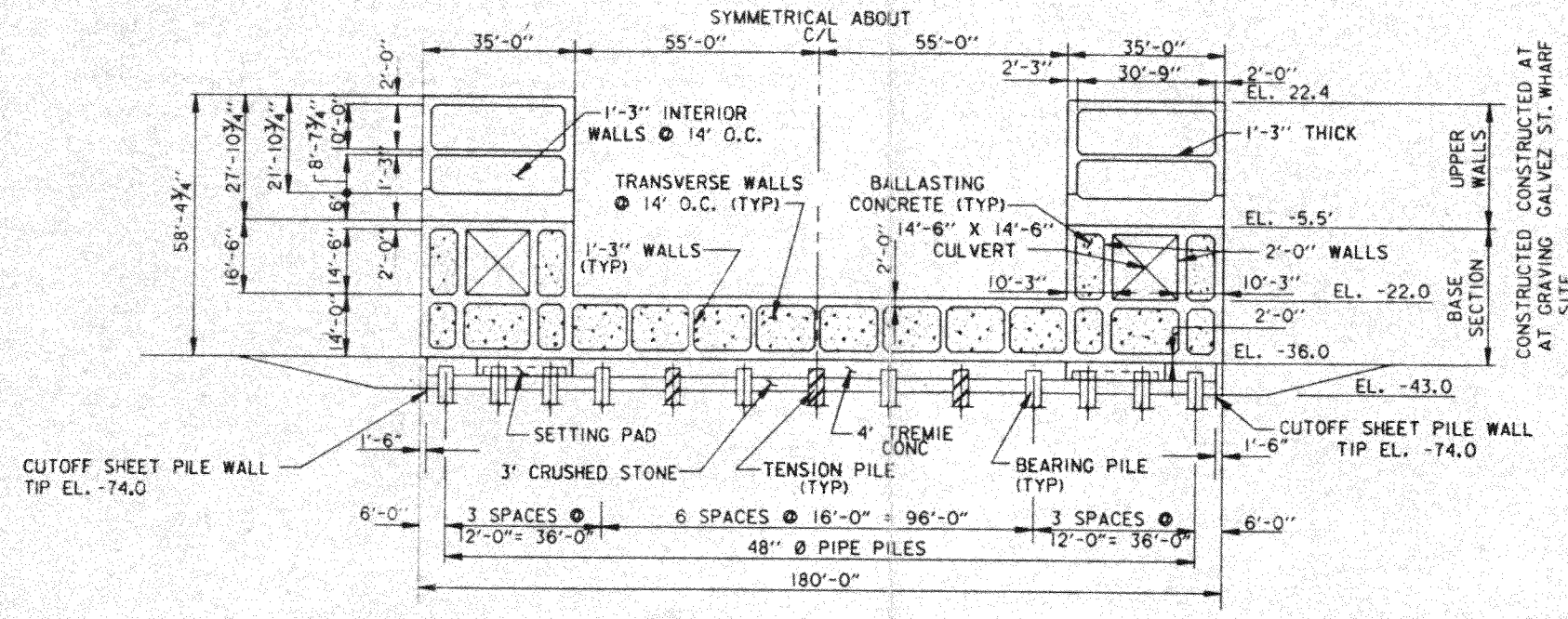

SECTION A (19|20)

SCALE: 1" = 20'

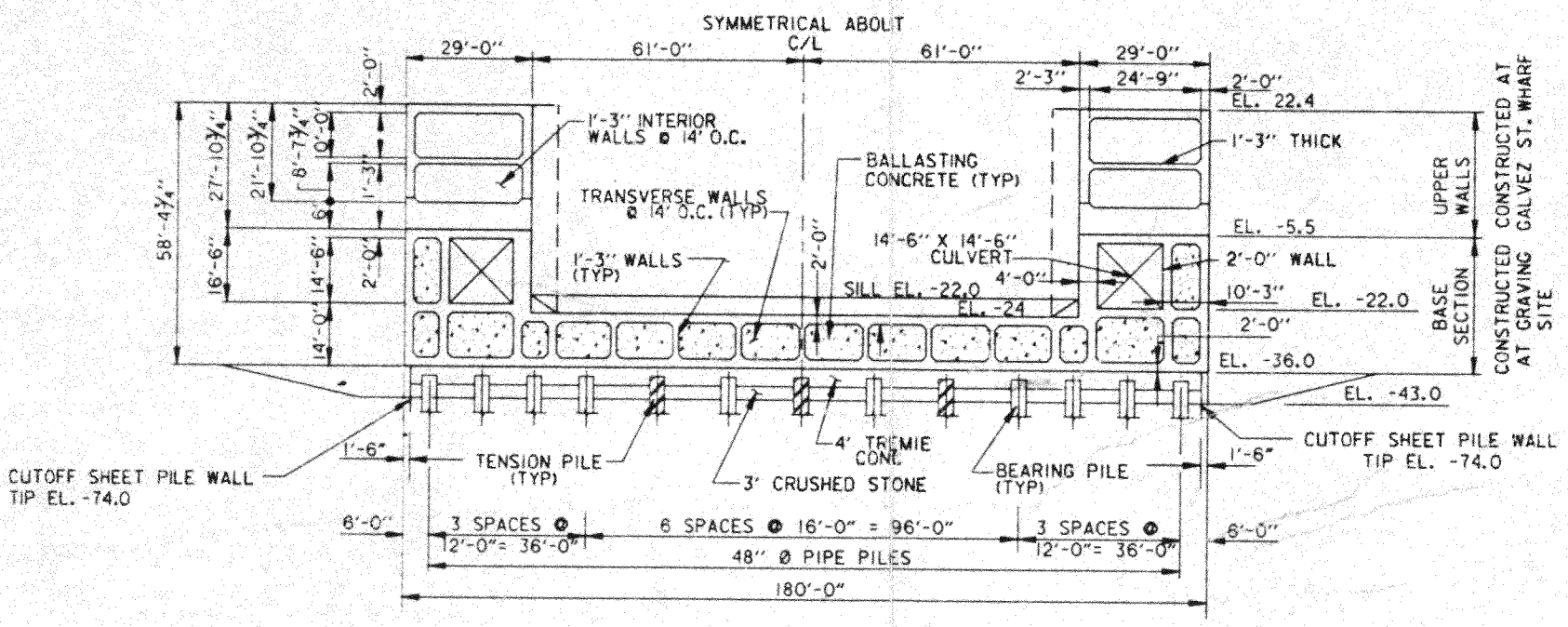

SECTION B (19|20)

SCALE: 1" = 20'

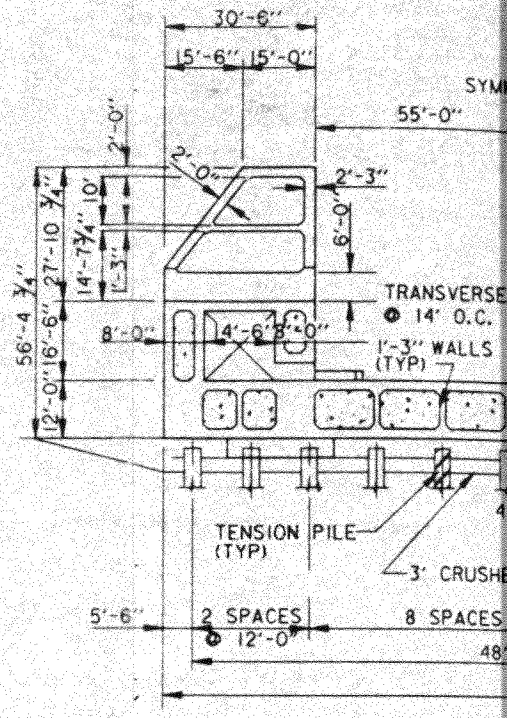

SECT

SC

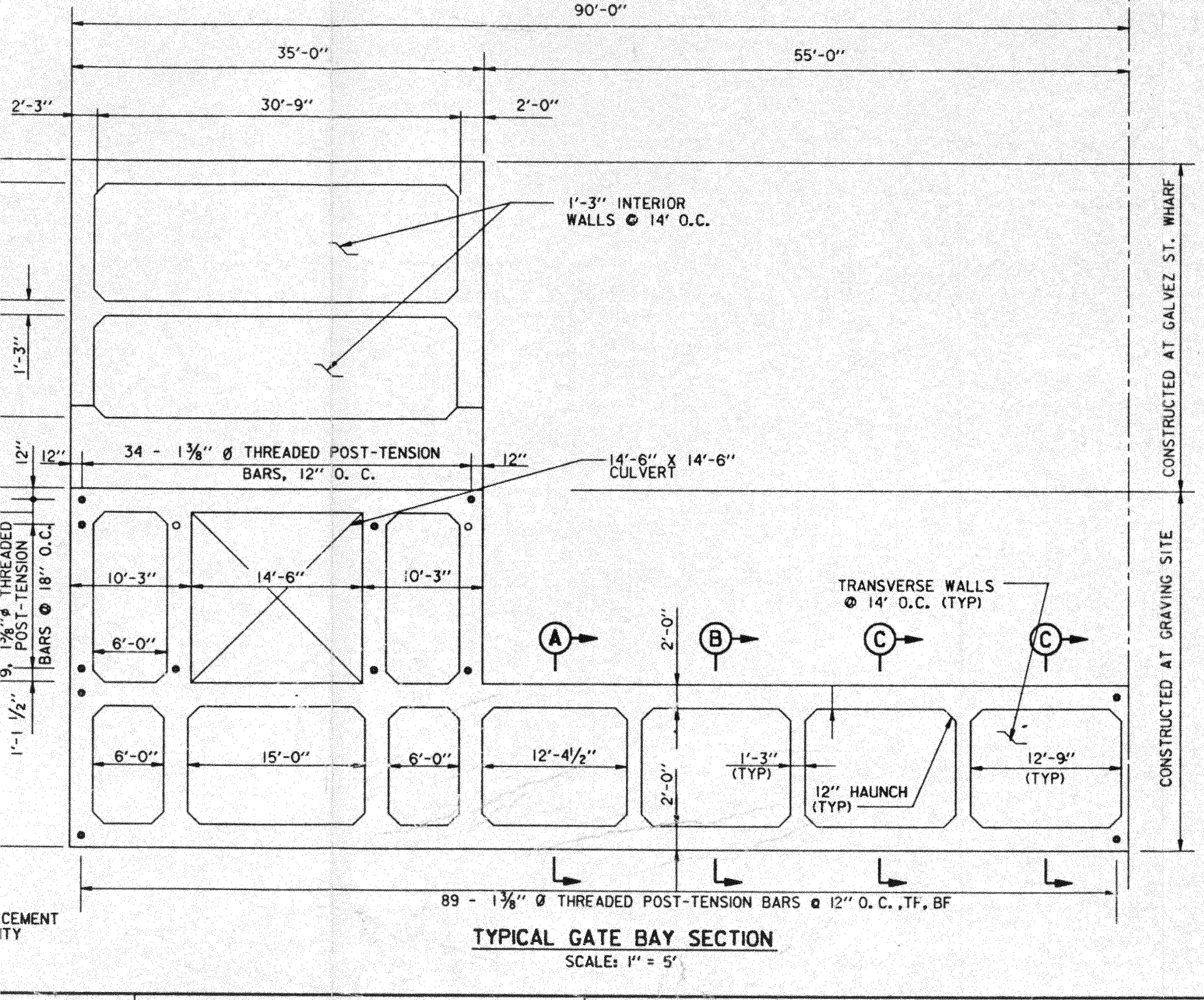

TYPICAL GATE BAY SECTION

SCALE: 1" = 5'

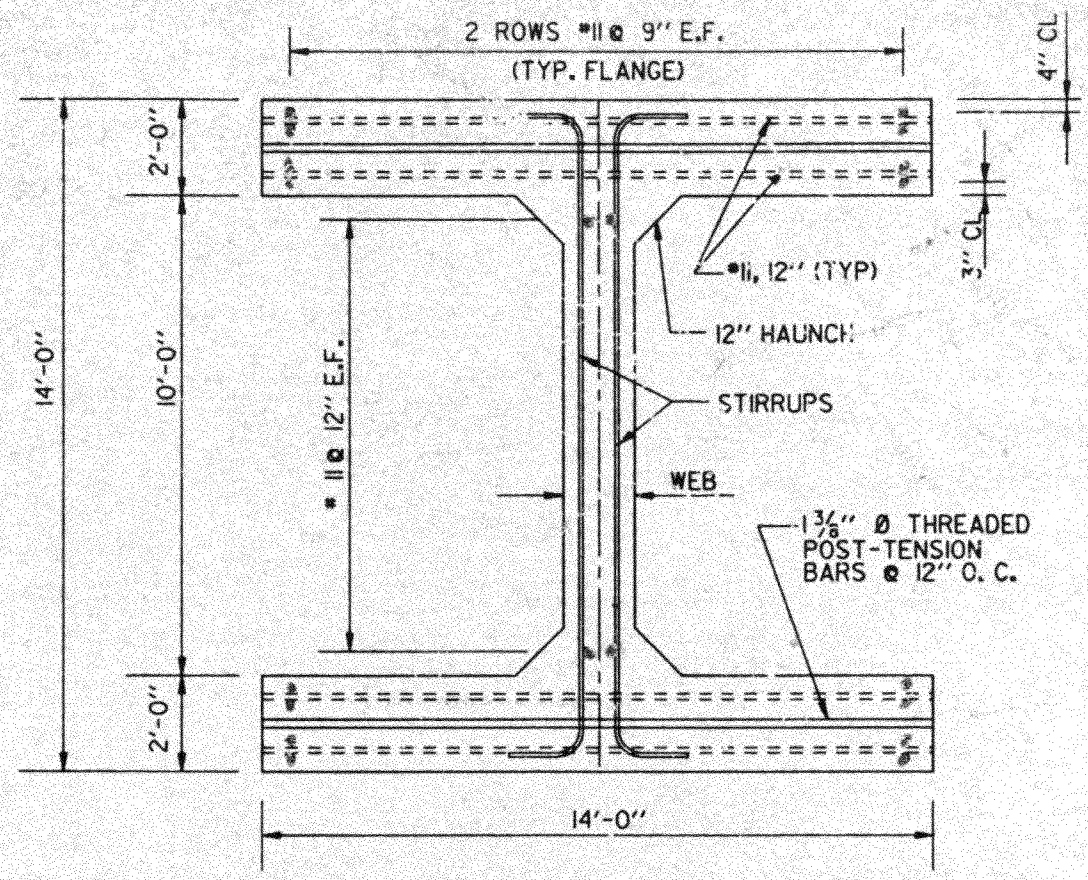

SECTIONS (A), (B), AND (C)

SCALE: ½" = 1'-0"

SECTION	WEB	STIRRUPS
(A)	27"	#8, 6"
(B)	21"	#8, 9"
(C)	18"	#8, 12"

SCALE: 3/16" = 1'- 0"

12" 0 5' 10' 15' 20'

SCALE: ½" = 1'- 0"

12" 0 2' 4' 6' 8'

MISSISSIPPI RIVER - GULF OUTLET
NEW LOCK AND CONNECTING CHANNELS
INDUSTRIAL CANAL LOCK REPLACEMENT
FEASIBILITY STUDY
NORTH OF CLAIBORNE AVENUE SITE

GATEBAY REINFORCEMENT DETAILS
900' CONCRETE BARGE LOCK

U.S. ARMY ENGINEER DISTRICT, NEW ORLEANS
CORPS OF ENGINEERS
NEW ORLEANS, LOUISIANA

DESIGNED BY: MHG / DCB	PLOT SCALE: 60	PLOT DATE: SEPT 96	CADD FILE: BARGEB31.DGN
DRAWN BY: TMJ			FILE NO. H-2-40392
CHECKED BY: MHG	DATE: OCTOBER 1996		

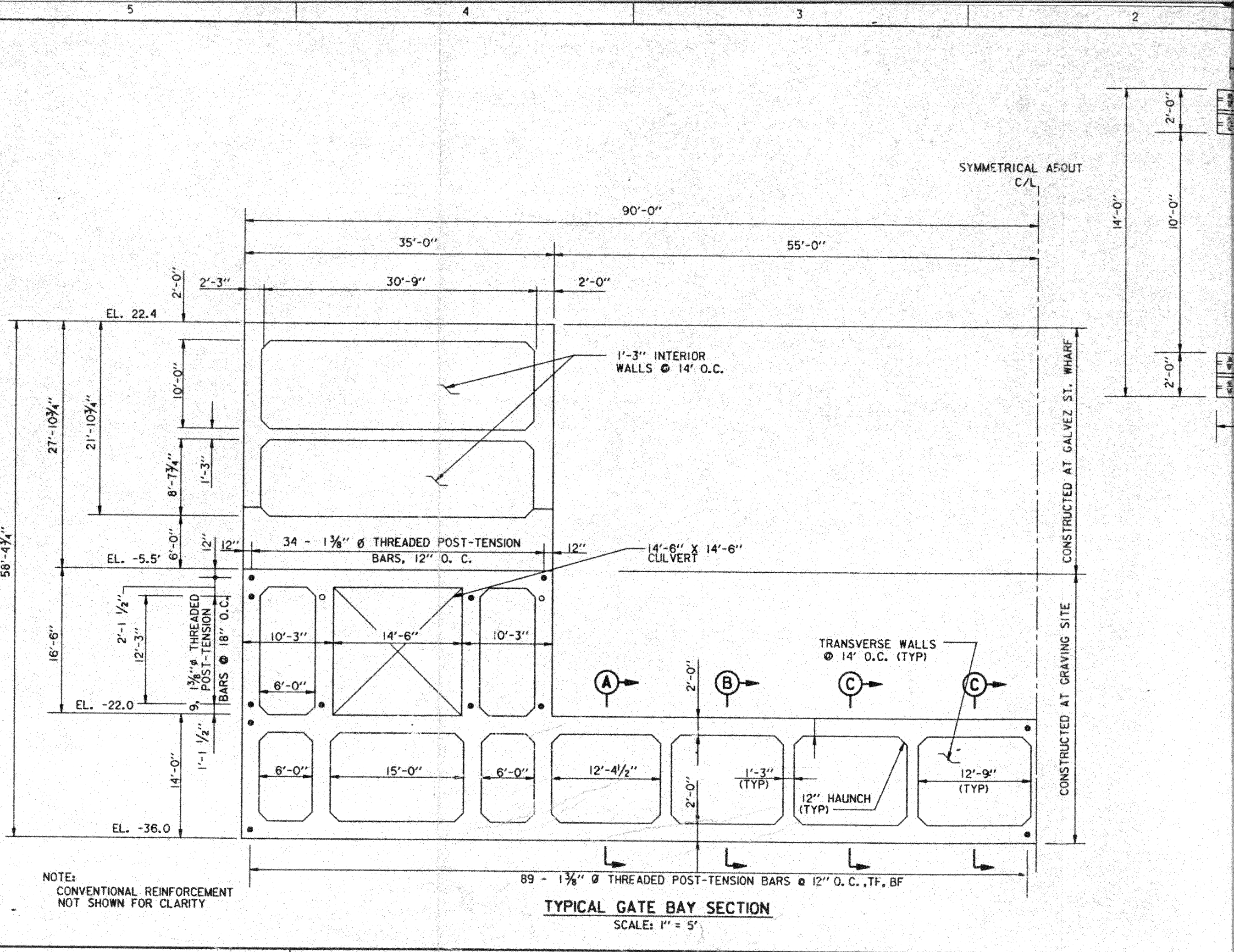

NOTE:
CONVENTIONAL REINFORCEMENT NOT SHOWN FOR CLARITY

TYPICAL GATE BAY SECTION

SCALE: 1" = 5'

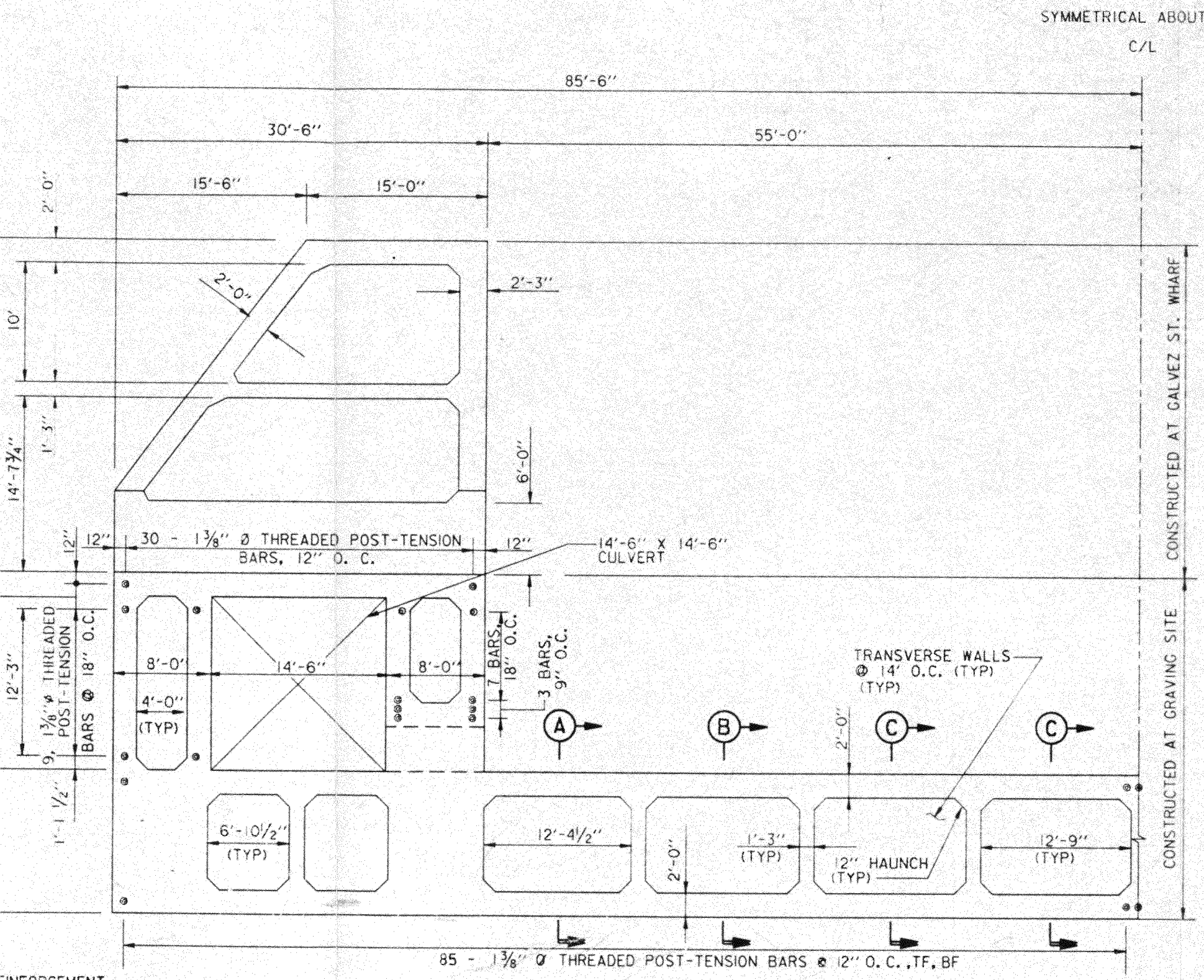

TYPICAL CHAMBER SECTION

SCALE: 1"=5'

EINFORCEMENT
CLARITY

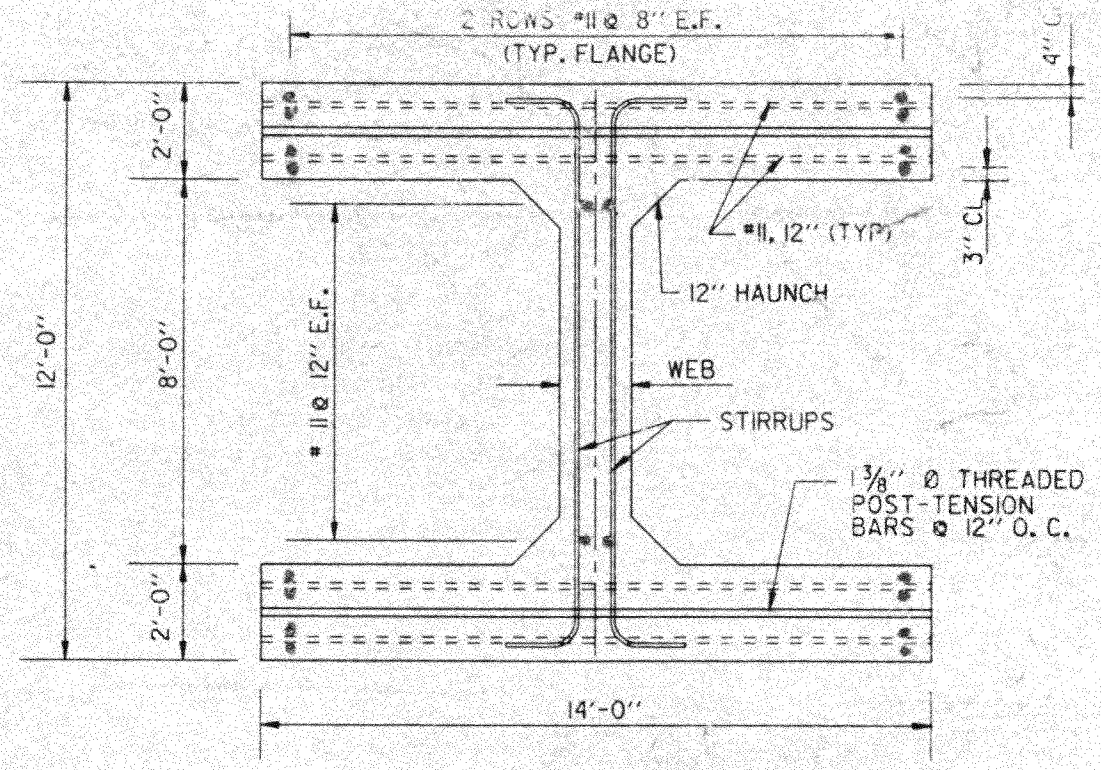

SECTIONS (A), (B), AND (C)

SCALE: ½" = 1'-0"

SECTION	WEB	STIRRUPS
(A)	27"	#8, 6"
(B)	21"	#8, 9"
(C)	18"	#8, 12"

SCALE: 1/16" = 1'- 0"

12" 0 5' 10' 5' 20'

SCALE: ½" = 1'- 0"

12" 0 2' 4' 6' 8'

MISSISSIPPI RIVER - GULF OUTLET
NEW LOCK AND CONNECTING CHANNELS
INDUSTRIAL CANAL LOCK REPLACEMENT
FEASIBILITY STUDY
NORTH OF CLAIBORNE AVENUE SITE

CHAMBER REINFORCEMENT DETAILS
900' CONCRETE BARGE LOCK

U.S. ARMY ENGINEER DISTRICT, NEW ORLEANS
CORPS OF ENGINEERS
NEW ORLEANS, LOUISIANA

DESIGNED BY: MNG / DCB	PLOT SCALE: 60	PLOT DATE: JULY 96	CADD FILE: BARGEB32.DGN
DRAWN BY: RMD			FILE NO.
CHECKED BY: MNG	DATE: OCTOBER 1996		H-2-40392

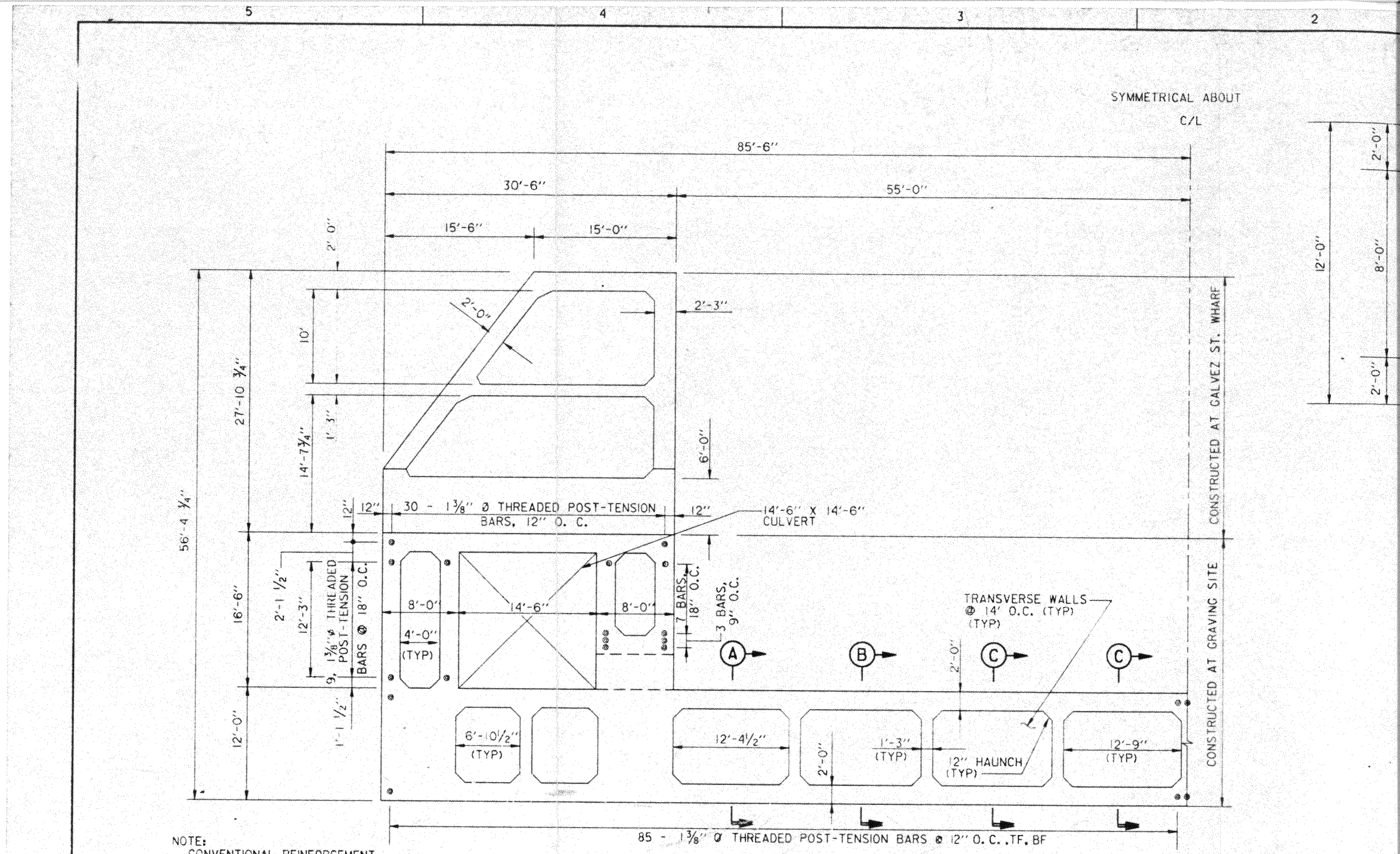

NOTE:
CONVENTIONAL REINFORCEMENT NOT SHOWN FOR CLARITY

TYPICAL CHAMBER SECTION

SCALE: 1"=5'

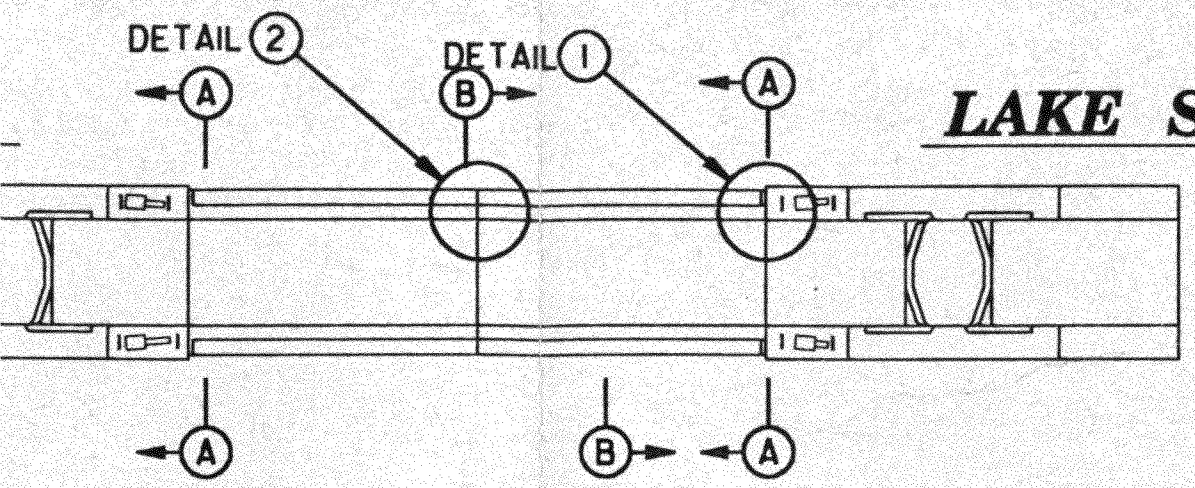

KEY PLAN
NOT TO SCALE

LAKE SIDE

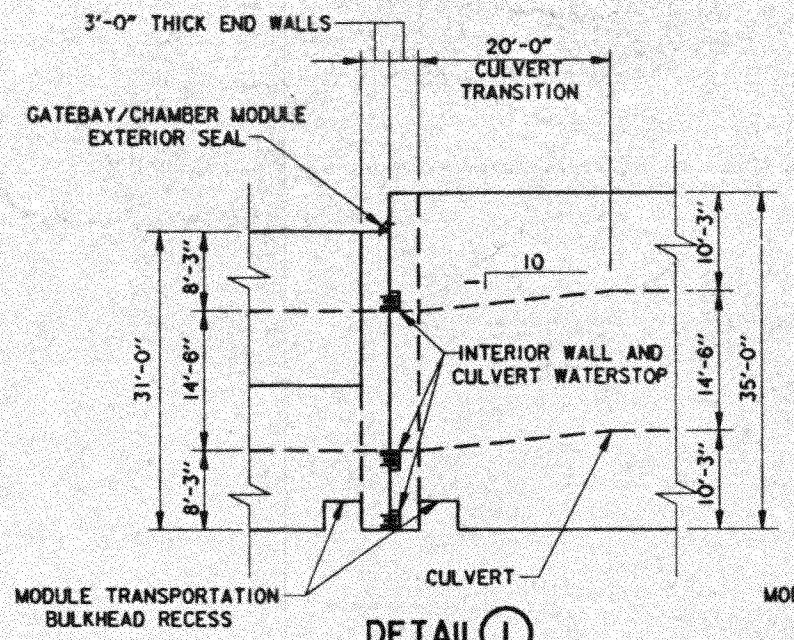

DETAIL (1)
SCALE: 1" = 10'

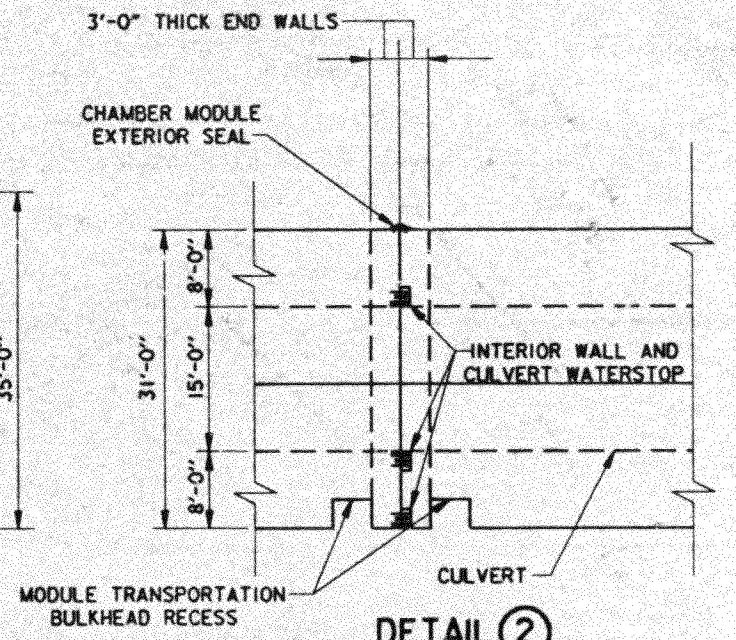

DETAIL (2)
SCALE: 1" = 10'

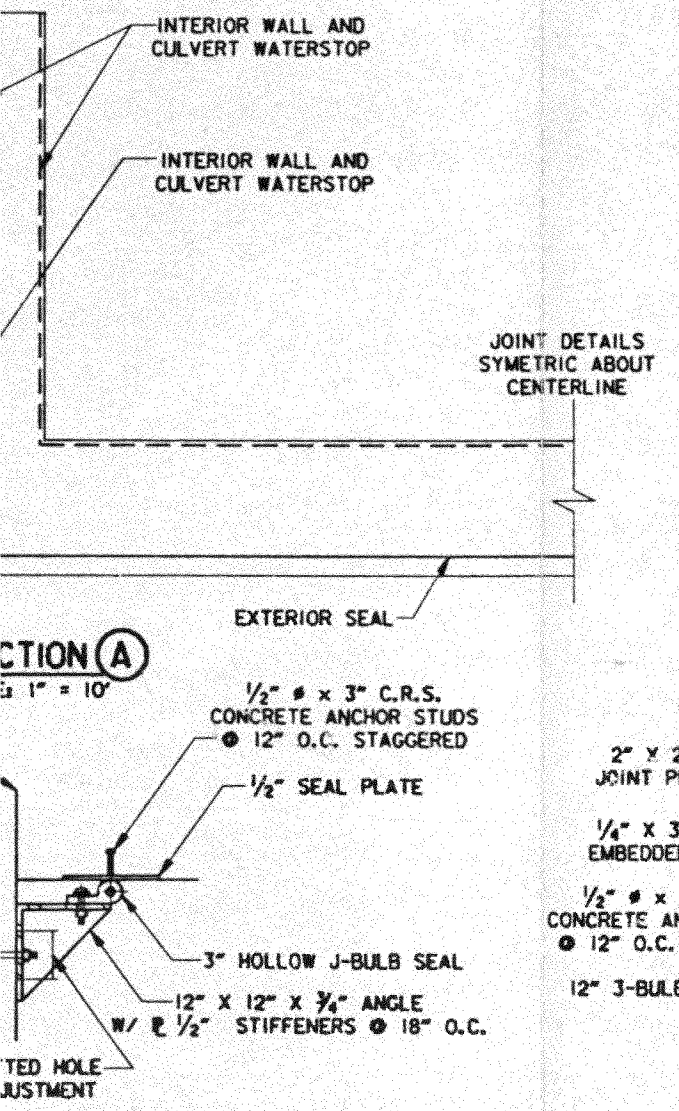

CTION (A)
: 1" = 10'

EXTERIOR SEAL DETAIL
SCALE: 1" = 1'-0"

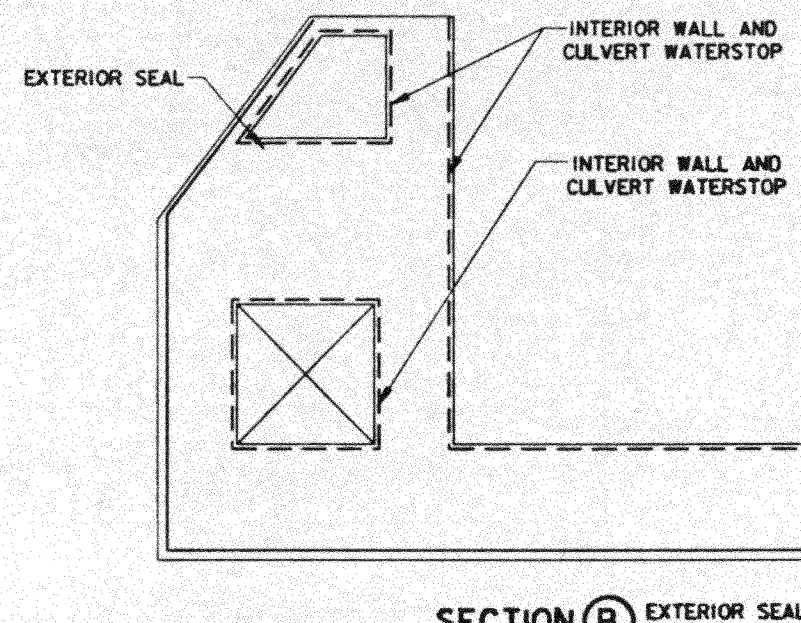

SECTION (B)
SCALE: 1" = 10'

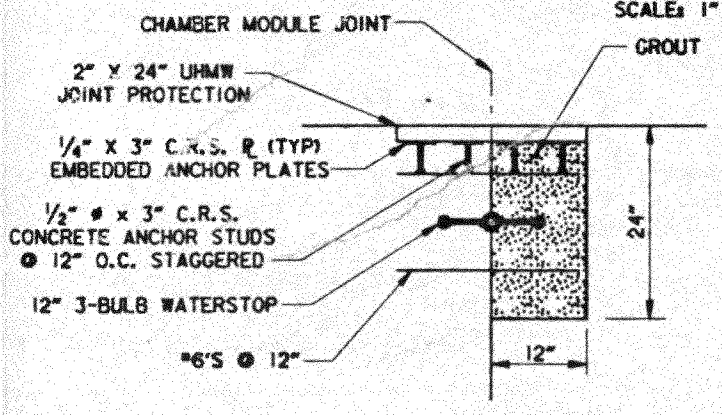

INTERIOR WALL & CULVERT WATERSTOP
SCALE: 1" = 1'-0"

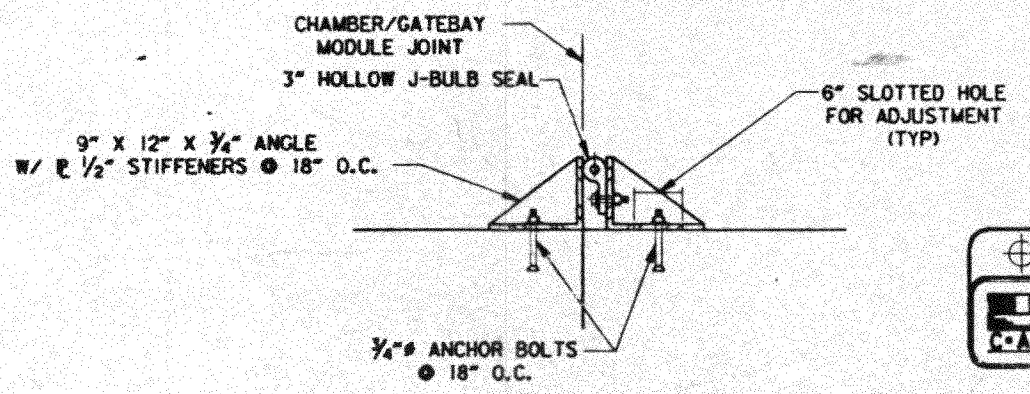

CHAMBER MODULE EXTERIOR SEAL DETAIL
SCALE: 1" = 1'-0"

SCALE: 1" = 1'- 0"
12" 0 1' 2' 3' 4' 5'

SCALE: 1" = 10'
10' 0 10' 20' 30' 40'

MISSISSIPPI RIVER - GULF OUTLET
NEW LOCK AND CONNECTING CHANNELS
INDUSTRIAL CANAL LOCK REPLACEMENT
FEASIBILITY STUDY
NORTH OF CLAIBORNE AVENUE SITE

JOINT DETAILS
900' CONCRETE BARGE LOCK

U.S. ARMY ENGINEER DISTRICT, NEW ORLEANS
CORPS OF ENGINEERS
NEW ORLEANS, LOUISIANA

DESIGNED BY: MHG	PLOT SCALE: 240	PLOT DATE: JULY 96	CADD FILE: BARGEBTL.DGN
DRAWN BY: RMD & TMU			FILE NO. H-2-40392
CHECKED BY: MHG	DATE: OCTOBER 1996		

D C B A

RIVER SIDE

LAKE SIDE

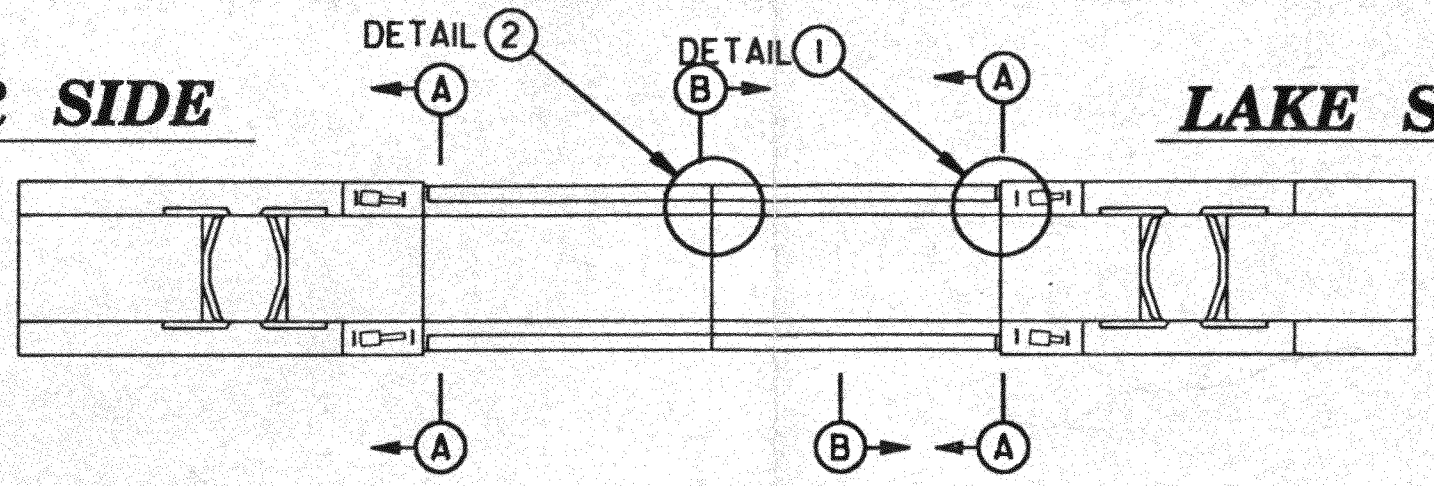

KEY PLAN
NOT TO SCALE

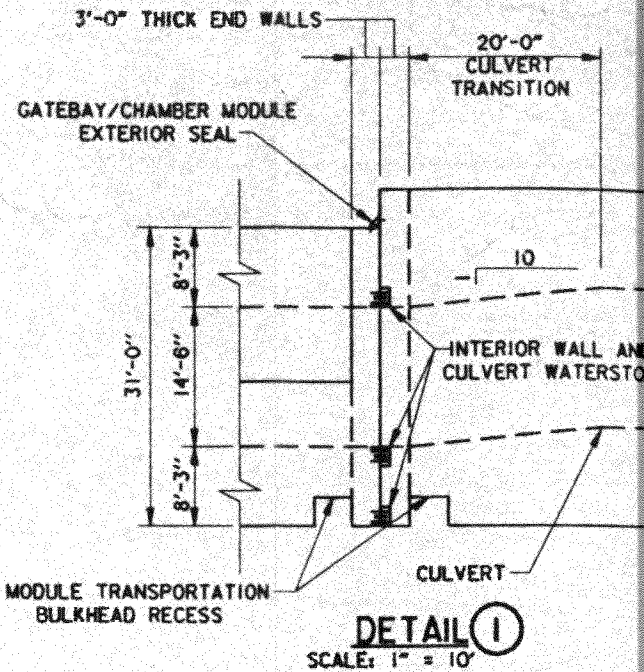

DETAIL (1)
SCALE: 1" = 10'

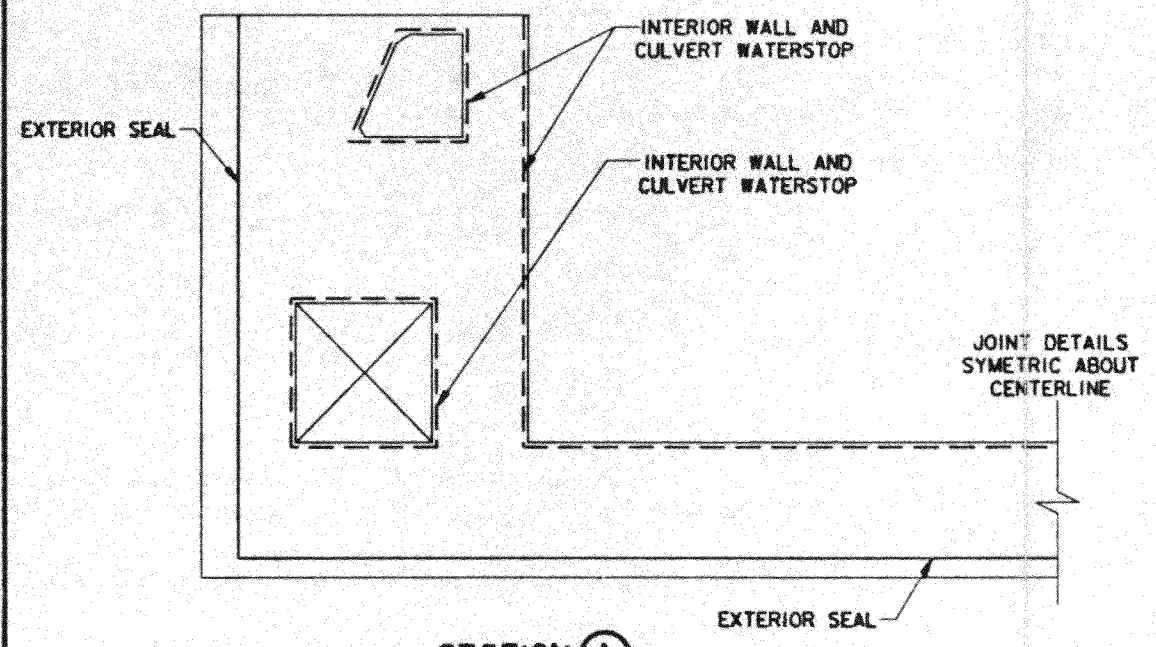

SECTION (A)
SCALE: 1" = 10'

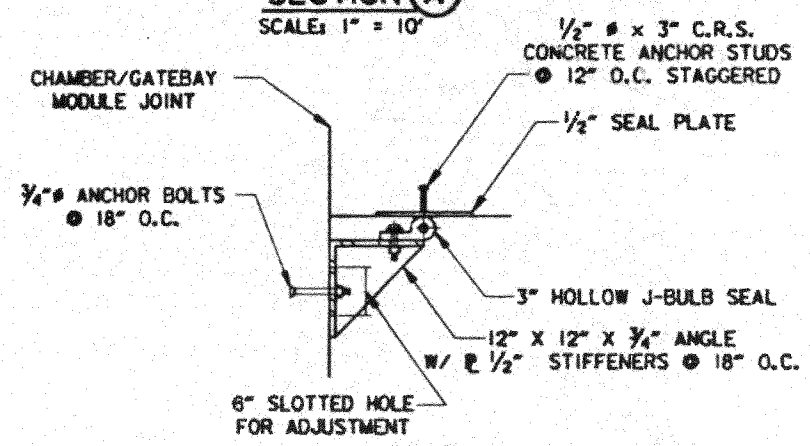

CHAMBER/GATEBAY EXTERIOR SEAL DETAIL
SCALE: 1" = 1'-0"

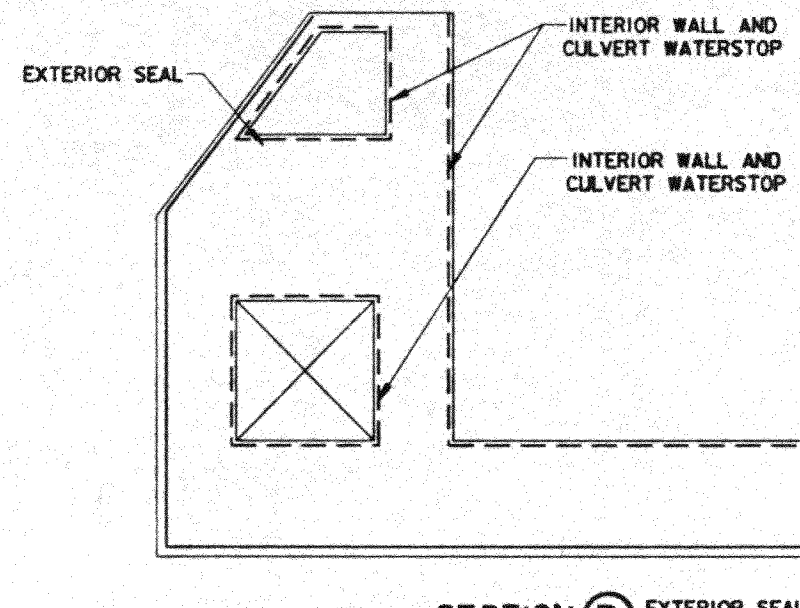

SECTION (B)
SCALE: 1" = 10'

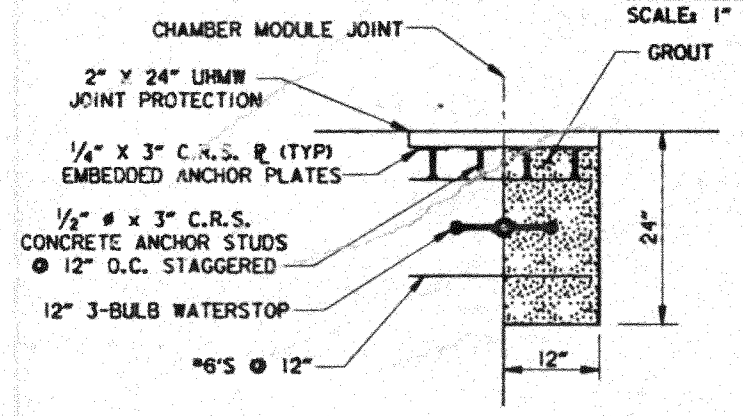

INTERIOR WALL & CULVERT WATERSTOP
SCALE: 1" = 1'-0"

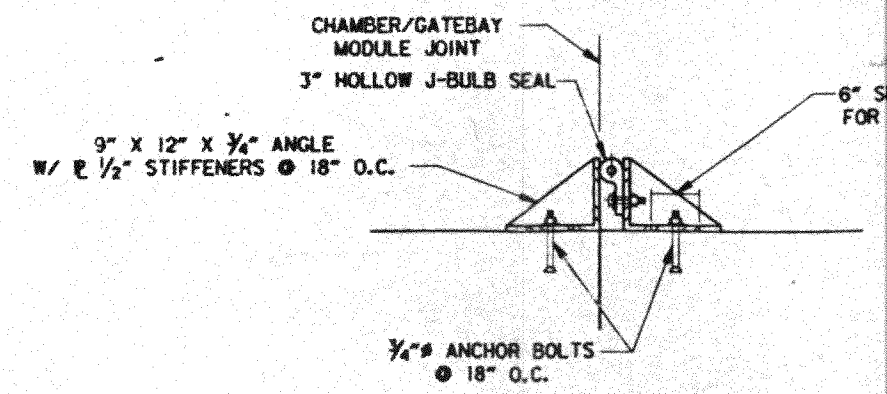

CHAMBER MODULE EXTERIOR SEAL D
SCALE: 1

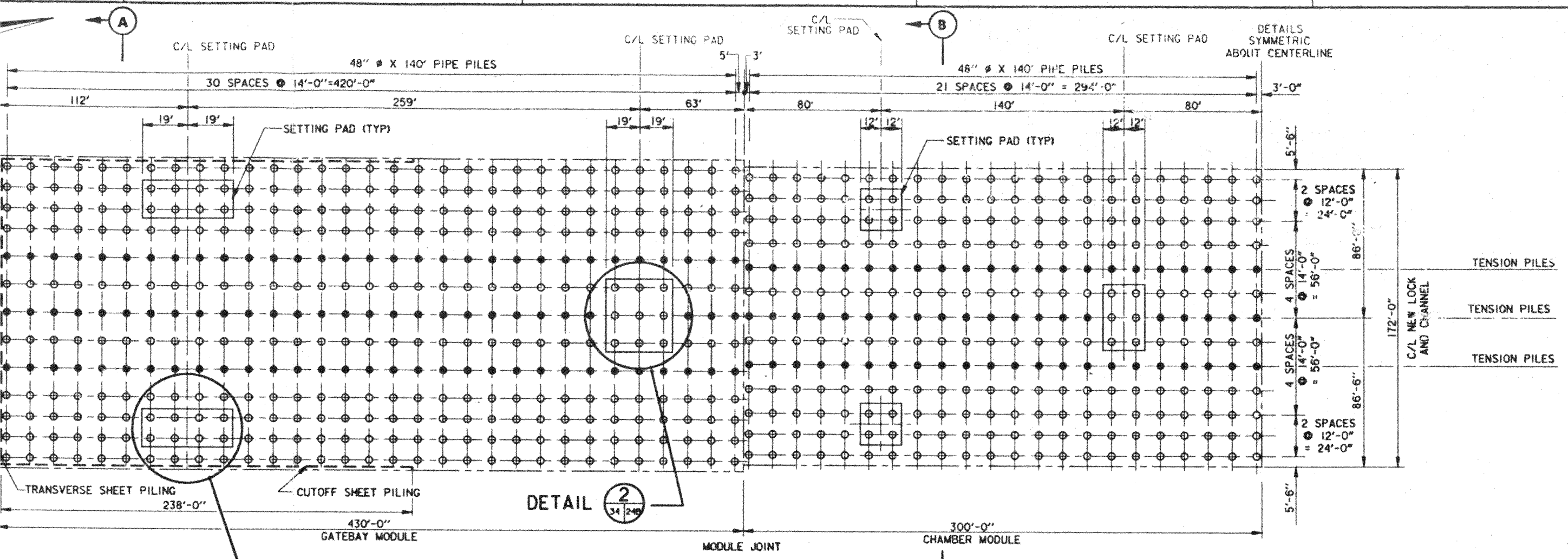

PILE LAYOUT

SCALE: 1"=30'

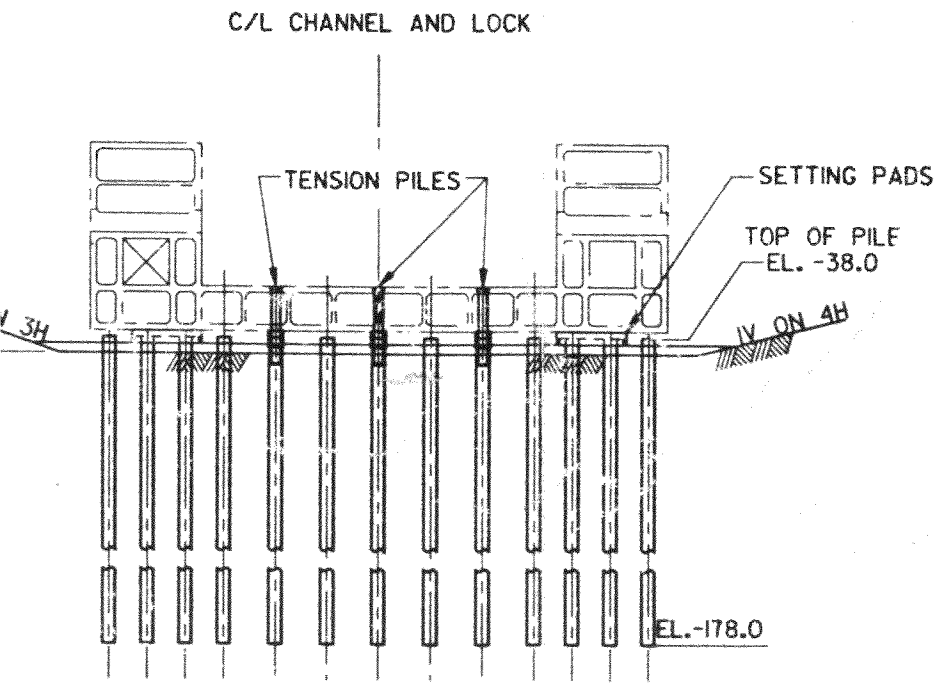

SECTION (A)

SCALE: 1"=30'

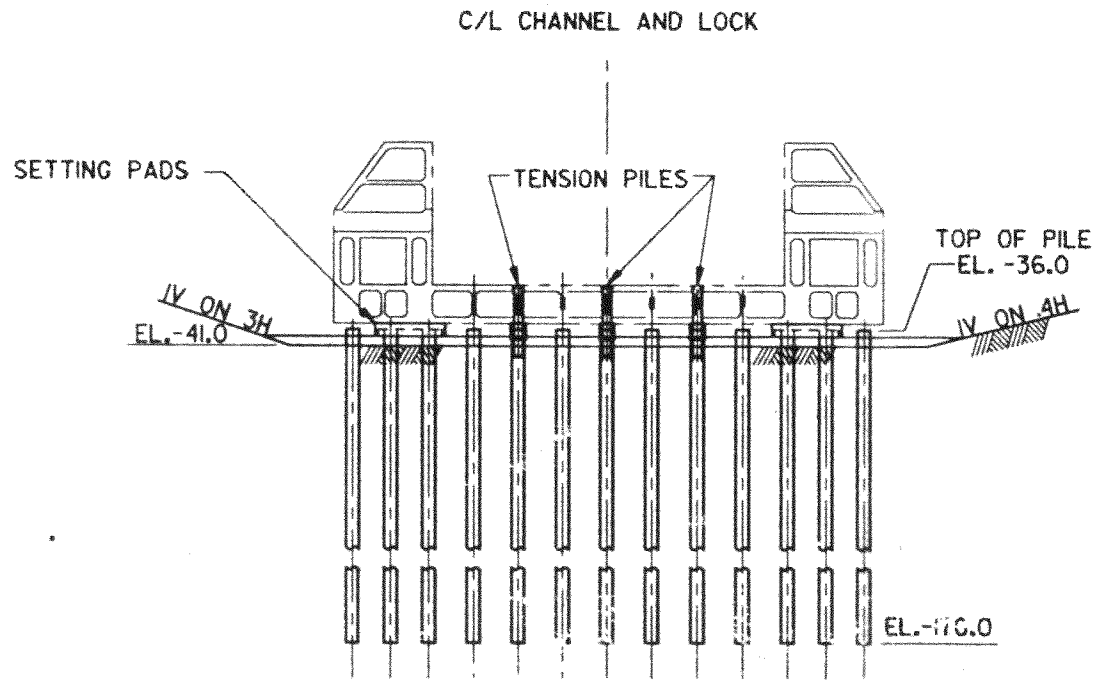

SECTION (B)

SCALE: 1"=30'

SCALE: 1" = 30'

30' 0 30' 60' 90' 120

MISSISSIPPI RIVER - GULF OUTLET
NEW LOCK AND CONNECTING CHANNELS
INDUSTRIAL CANAL LOCK REPLACEMENT
FEASIBILITY STUDY
NORTH OF CLAIBORNE AVE. SITE

SETTING PILE PLAN
900' CONCRETE BARGE LOCK

U.S. ARMY ENGINEER DISTRICT, NEW ORLEANS
CORPS OF ENGINEERS
NEW ORLEANS, LOUISIANA

DESIGNED BY: MHG	PLOT SCALE: 360	PLOT DATE: SEPT 1996	CADD FILE: BARGEB34.DGN
DRAWN BY: TWU			FILE NO. H-2-40392
CHECKED BY: MHG	DATE: OCTOBER 1996		

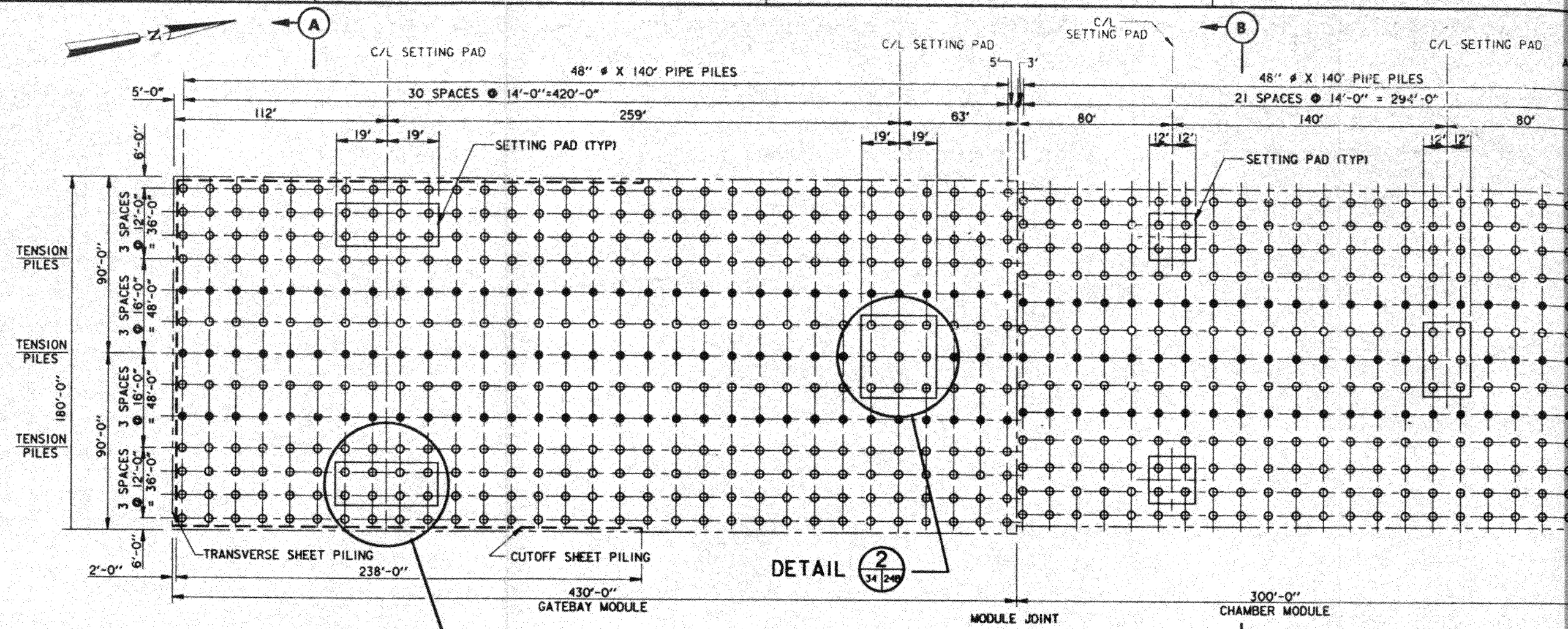

RIVER SIDE

A

PILE LAYOUT

SCALE: 1"=30'

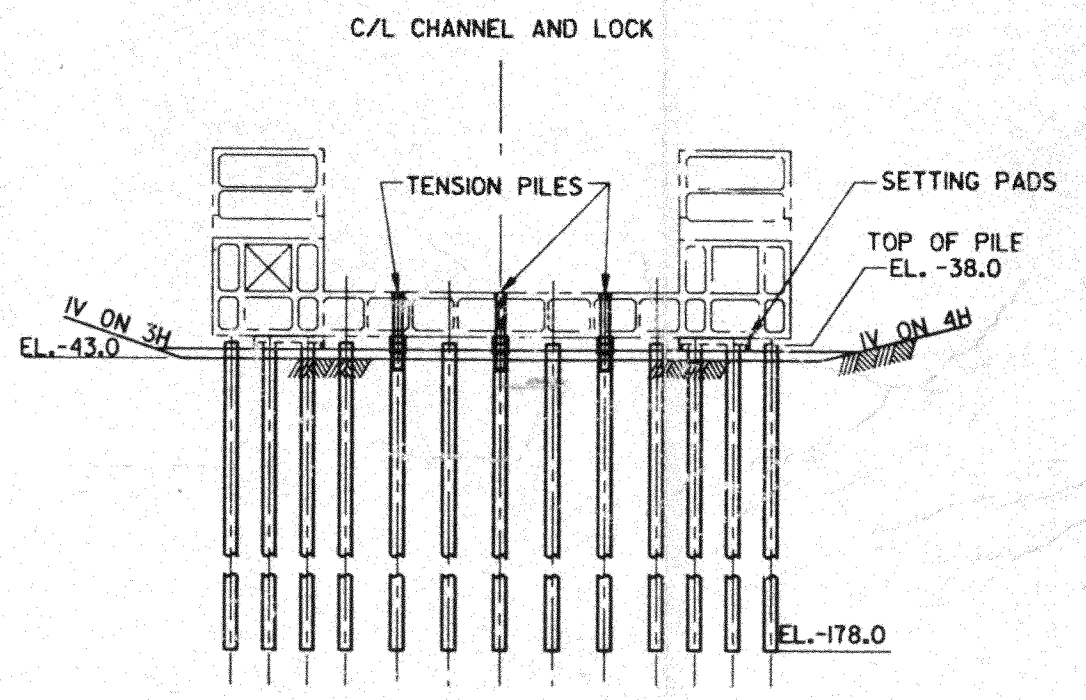

SECTION (A)

SCALE: 1"=30'

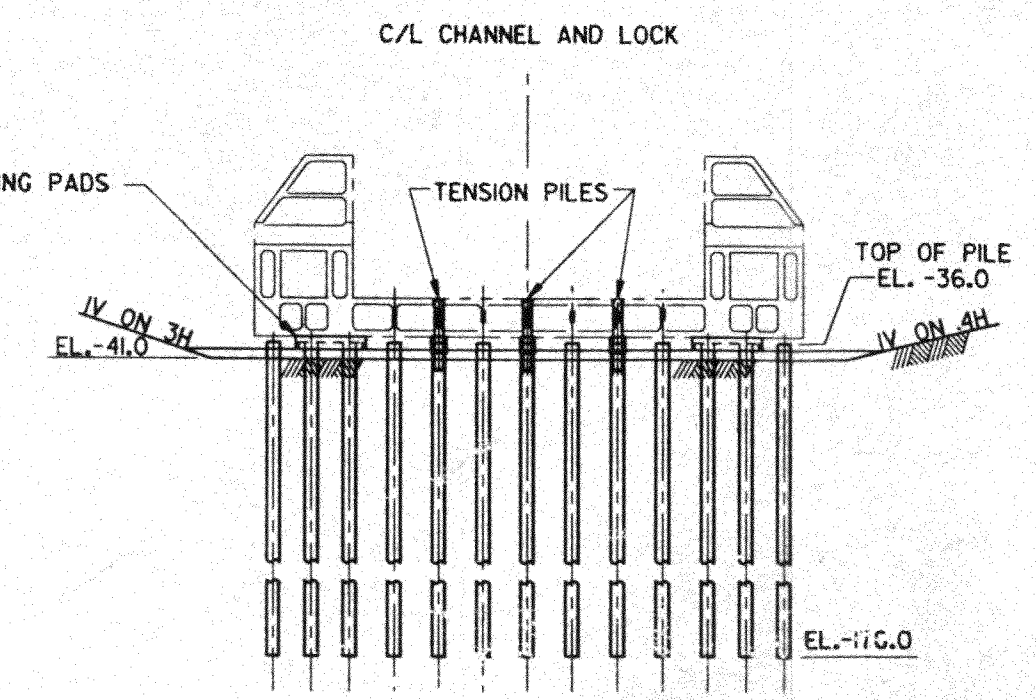

SECTION (B)

SCALE: 1"=30'

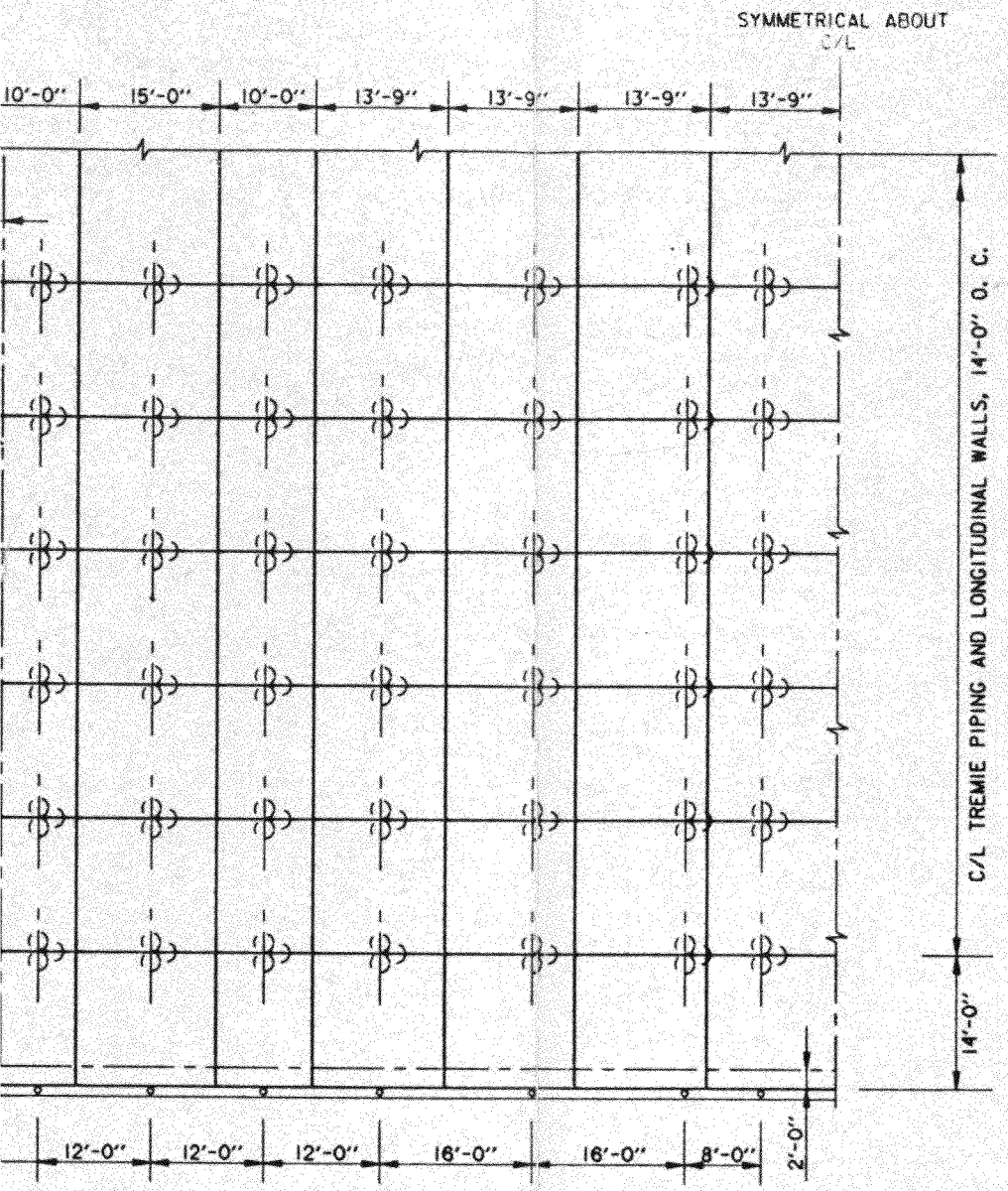

AN - GROUT PIPING (GATEBAY MONOLITH) EL. -28.0

(CHAMBER SECTION SIMILAR)

SCALE: 1"=10'

BE INSTALLED
. EACH PIPE SHALL BE

'ILE (PZ-22) SHALL BE DRIVEN AFTER THE
ACE. A 4"ø GROUT PIPE SHALL BE INSERTED DOWN
JPPLY TREMIE CONCRETE ALONG THE BASE
LACEMENT, THE CONTAINMENT PILING
EMOVED ABOVE EL. -28.0.

CTION SHALL HAVE A SEPERATE
TENDS INTO THE PILE CENTER.
LACEMENT CAN BE ACCOMPILISHED
ETTING.

L BE CONNECTED TO THE VALVED 4"ø
ACEMENT SHALL BE VERIFIED BY VOLUME
NG MATERIAL FLOW THROUGH
N THE 8"ø EFFLUENT PIPE.

ON IS COMPLETED, THE 8"ø EFFLUENT PIPE
AND USED TO PLACE BALLAST CONCRETE.

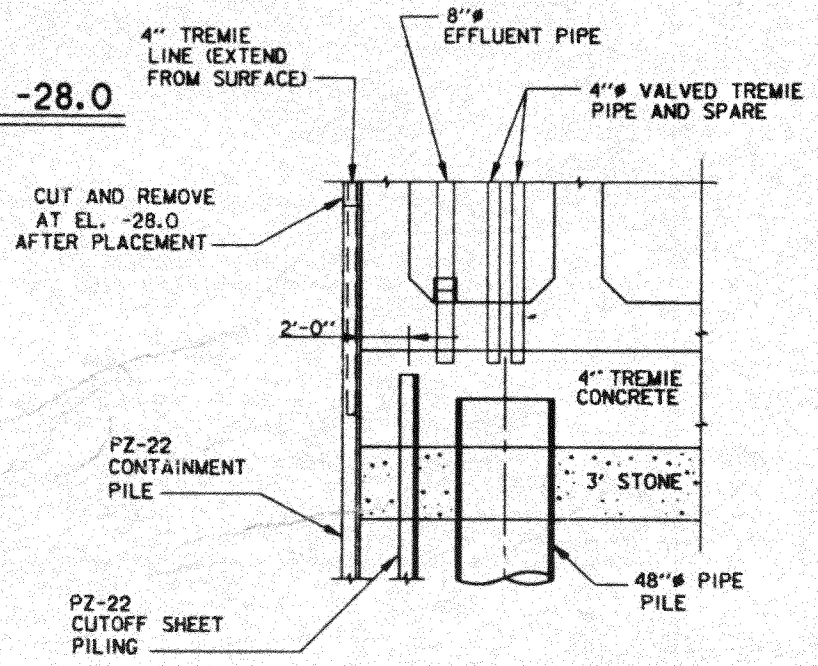

CUTOFF PILING DETAIL

SCALE: 1/4"=1'-0"

LEGEND

⊠ DENOTES VALVE

□ DENOTES COUPLE

▥ DENOTES CLEAR INSPECTION COUPLER

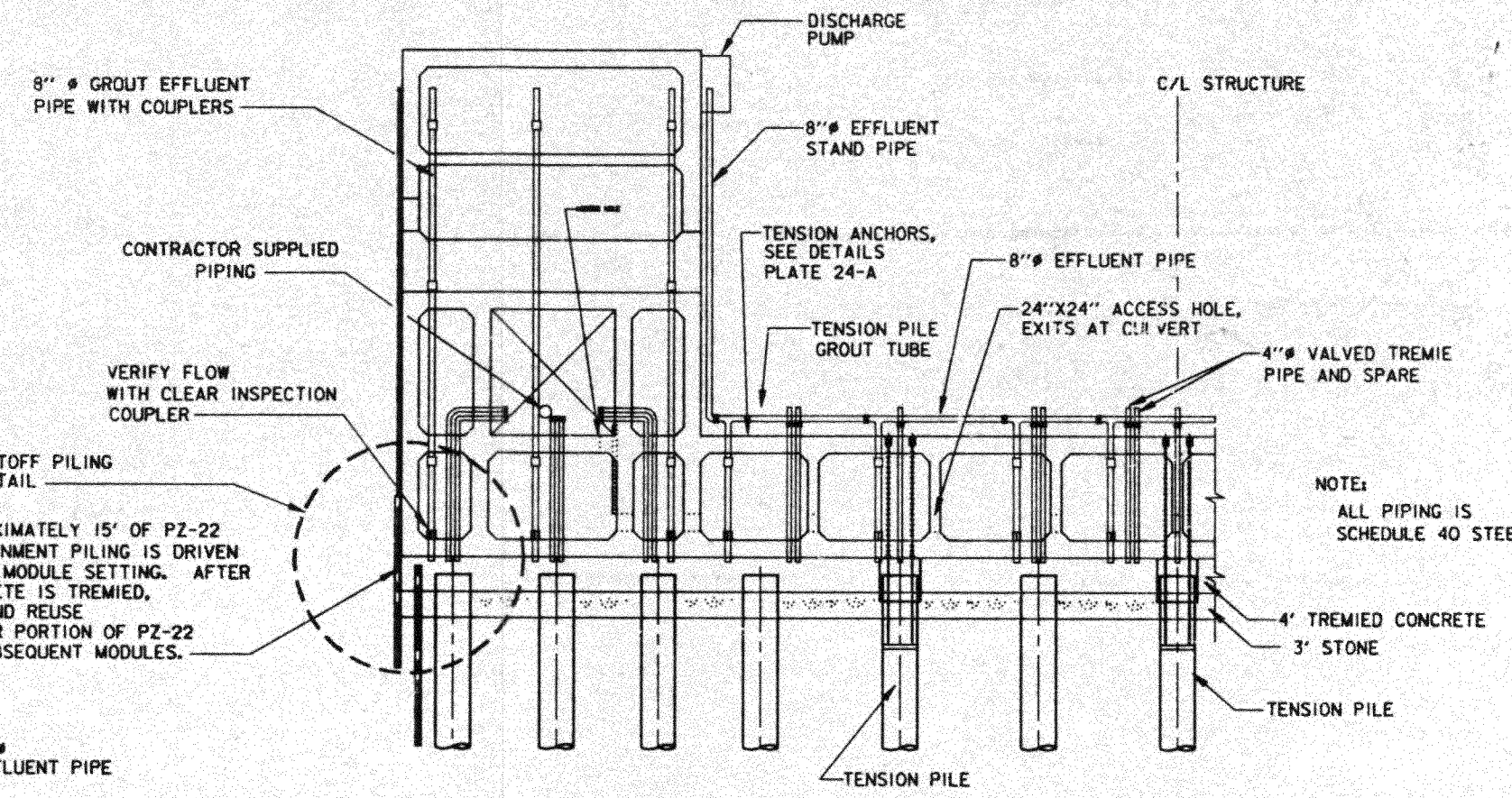

TYPICAL GATEBAY PILING SYSTEM AT 14' O. C.

(CHAMBER SECTION SIMILAR)

SCALE: 1"=10'

NOTE:
THE 4' VOID SHALL BE FILLED WITH TREMIED CONCRETE CONTAINING SMALL DIAMETER AGGREGATE. THE TENSION PILE AND SETTING POD VOID SHALL BE FILLED WITH A SAND/CEMENT GROUT.

SCALE: 1" = 10'

10' 0 10' 20' 30' 40'

SCALE: 1/4" = 1'- 0"

12" 0 5' 10' 15' 20'

MISSISSIPPI RIVER - GULF OUTLET
NEW LOCK AND CONNECTING CHANNELS
INDUSTRIAL CANAL LOCK REPLACEMENT
FEASIBILITY STUDY
NORTH OF CLAIBORNE AVENUE SITE

FOUNDATION PREPARATION
900' CONCRETE BARGE LOCK

U.S. ARMY ENGINEER DISTRICT, NEW ORLEANS
CORPS OF ENGINEERS
NEW ORLEANS, LOUISIANA

DESIGNED BY: MHG	PLOT SCALE: 120	PLOT DATE: SEPT 98	CADD FILE: BARGE35.DGN
DRAWN BY: RMD			FILE NO. H-2-40392
CHECKED BY: MHG	DATE: OCTOBER 1998		

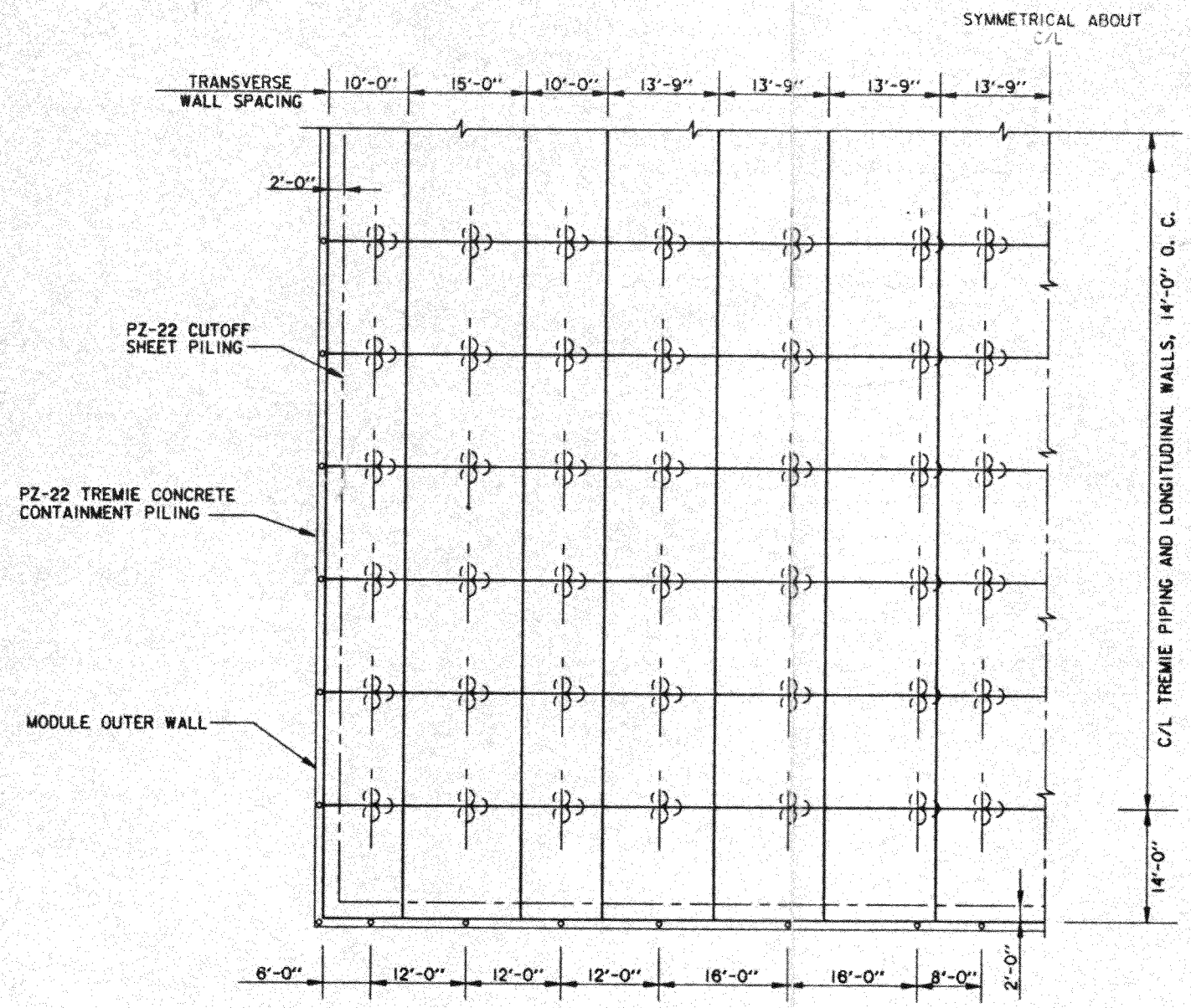

PART PLAN - GROUT PIPING (GATEBAY MONOLITH) EL. -28.0

(CHAMBER SECTION SIMILAR)

SCALE: 1"=10'

PIPING SYSTEM

1. PIPING SYSTEM SHALL BE INSTALLED AT THE GRAVING SITE. EACH PIPE SHALL BE VALVED.
2. CONTAINMENT SHEET PILE (PZ-22) SHALL BE DRIVEN AFTER THE MODULE IS SET IN PLACE. A 4"ø GROUT PIPE SHALL BE INSERTED DOWN THE 'PZ' DEPTH TO SUPPLY TREMIE CONCRETE ALONG THE BASE PERIMETER. AFTER PLACEMENT, THE CONTAINMENT PILING SHALL BE CUT AND REMOVED ABOVE EL. -28.0.
3. EACH TENSION CONNECTION SHALL HAVE A SEPERATE GROUT TUBE THAT EXTENDS INTO THE PILE CENTER. ANCHOR AND GROUT PLACEMENT CAN BE ACCOMPILISHED IMMEDIATELY AFTER SETTING.
4. DELIVERY PIPING SHALL BE CONNECTED TO THE VALVED 4"ø PIPES. CONCRETE PLACEMENT SHALL BE VERIFIED BY VOLUME CHECKS AND INSPECTING MATERIAL FLOW THROUGH THE CLEAR COUPLER IN THE 8"ø EFFLUENT PIPE.
5. ONCE TREMIE OPERATION IS COMPLETED, THE 8"ø EFFLUENT PIPE SHALL BE UNCOUPLED AND USED TO PLACE BALLAST CONCRETE.

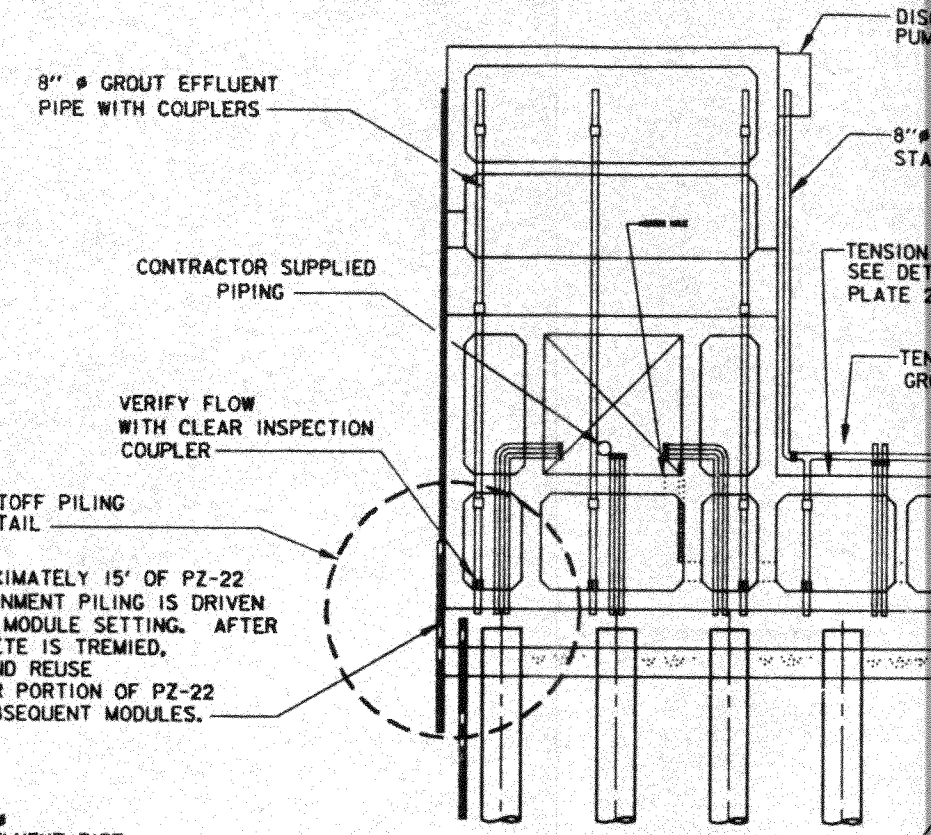

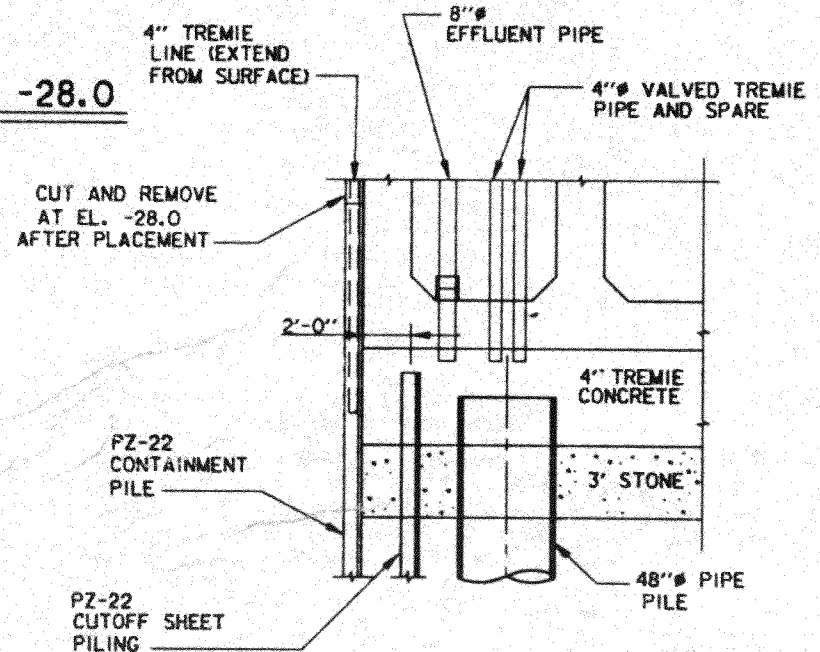

CUTOFF PILING DETAIL

SCALE: 1/4"=1'-0"

TYPICAL GATEBAY PILING

(CHAMBER SECT

SCALE: 1

NOTE:
THE 4' VOID SHALL BE FILLED WITH T
CONTAINING SMALL DIAMETER AGGREGA
AND SETTING POD VOID SHALL BE FIL
GROUT.

SCALE: 1" =

10' 0 10' 20'

SCALE: 1/4" = 1'

12" 0 5' 10'

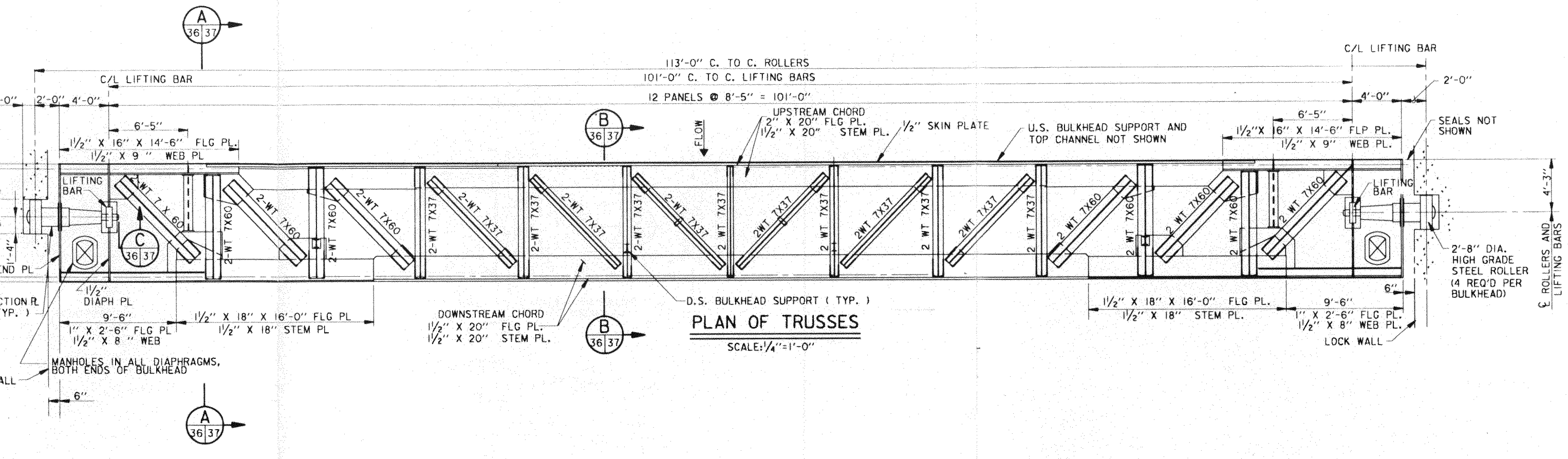

PLAN OF TRUSSES

SCALE: 1/4" = 1'-0"

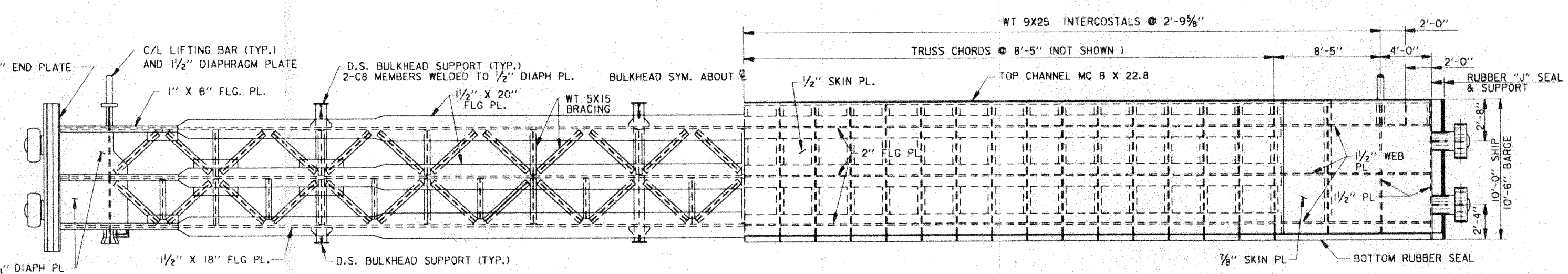

PART UPSTREAM ELEVATION

PART DOWNSTREAM ELEVATION

SCALE: 1/4" = 1'- 0"

12" 0 5' 10' 15' 20'

BULKHEAD ASSEMBLY

SCALE: 1/4" = 1'-0"

NOTE:

1. ALL PLATES AND MEMBERS SHALL BE A588, GRADE 50 STEEL.
2. 6 BULKHEADS REQUIRED FOR THE SHIPLOCK. 4 BULKHEADS REQ'D FOR BARGE LOCK.

MISSISSIPPI RIVER - GULF OUTLET
NEW LOCK AND CONNECTING CHANNEL
(INDUSTRIAL CANAL LOCK REPLACEMENT)
FEASIBILITY STUDY
NORTH OF CLAIBORNE AVE. SITE

EMERGENCY BULKHEAD SHIP AND BARGE LOCK

U.S. ARMY ENGINEER DISTRICT, NEW ORLEANS
CORPS OF ENGINEERS
NEW ORLEANS, LOUISIANA

DESIGNED BY: X	PLOT SCALE: 48	PLOT DATE: X	CADD FILE: FSBULKHD.DGN	
DRAWN BY: X			FILE NO.	H-4-30883
CHECKED BY: X	DATE: MAY 1			

PLATE B-36

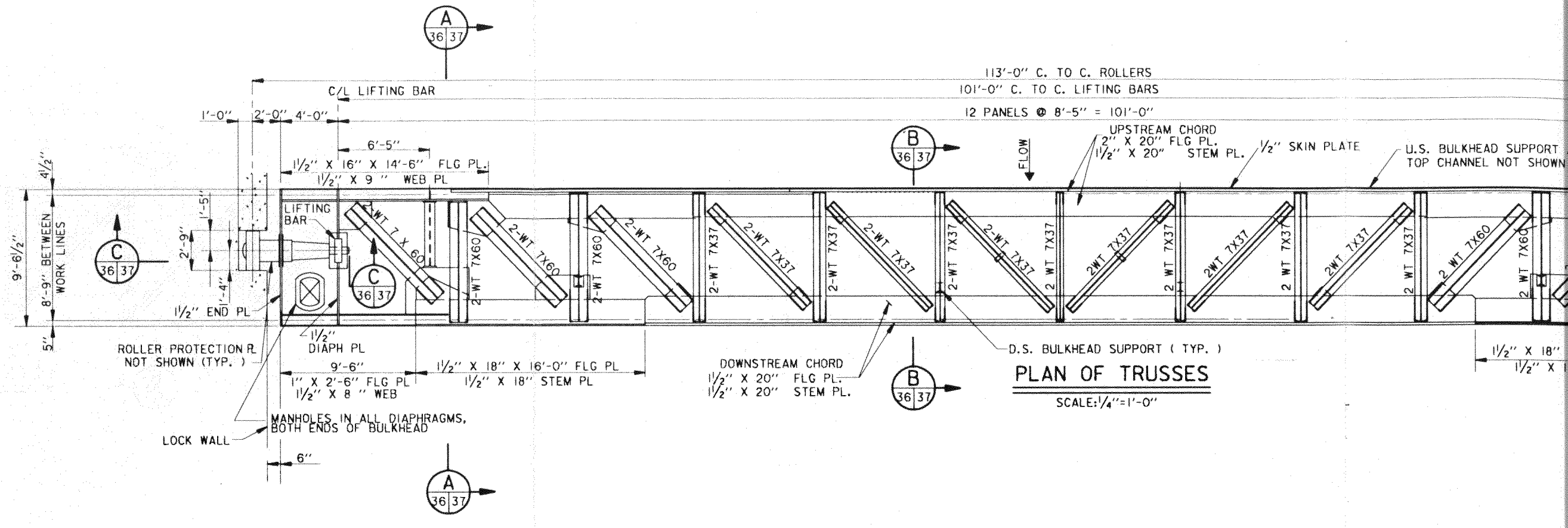

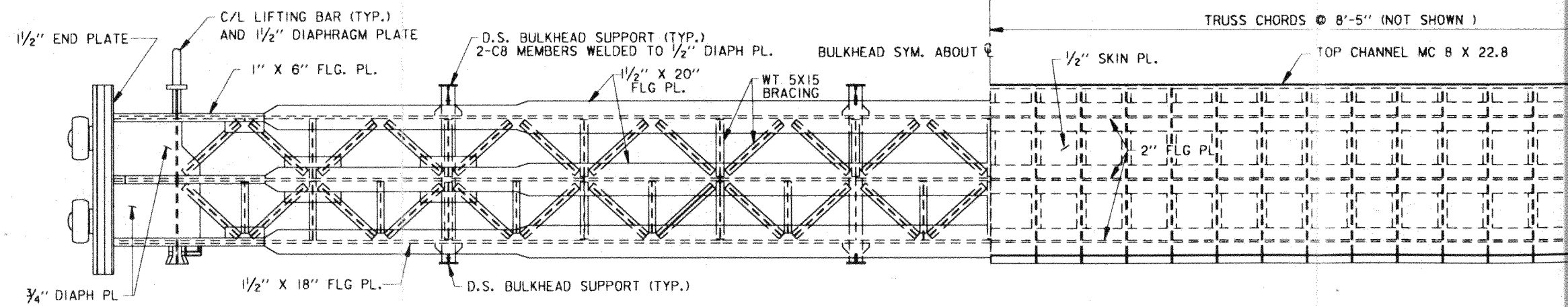

PART UPSTREAM ELEVATION

PART DOWNSTREAM ELEVATION

SCALE: 1/4" = 1'- 0"

12" 0 5' 10' 15' 20'

BULKHEAD ASSEMBLY

SCALE: 1/4"=1'-0"

NOTE:

1. ALL PLATES AND MEMBERS SHALL BE A588, GRADE 50 STEEL.
2. 6 BULKHEADS REQUIRED FOR THE SHIPLOCK. 4 BULKHEADS REQ'D FOR BARGE LOCK.

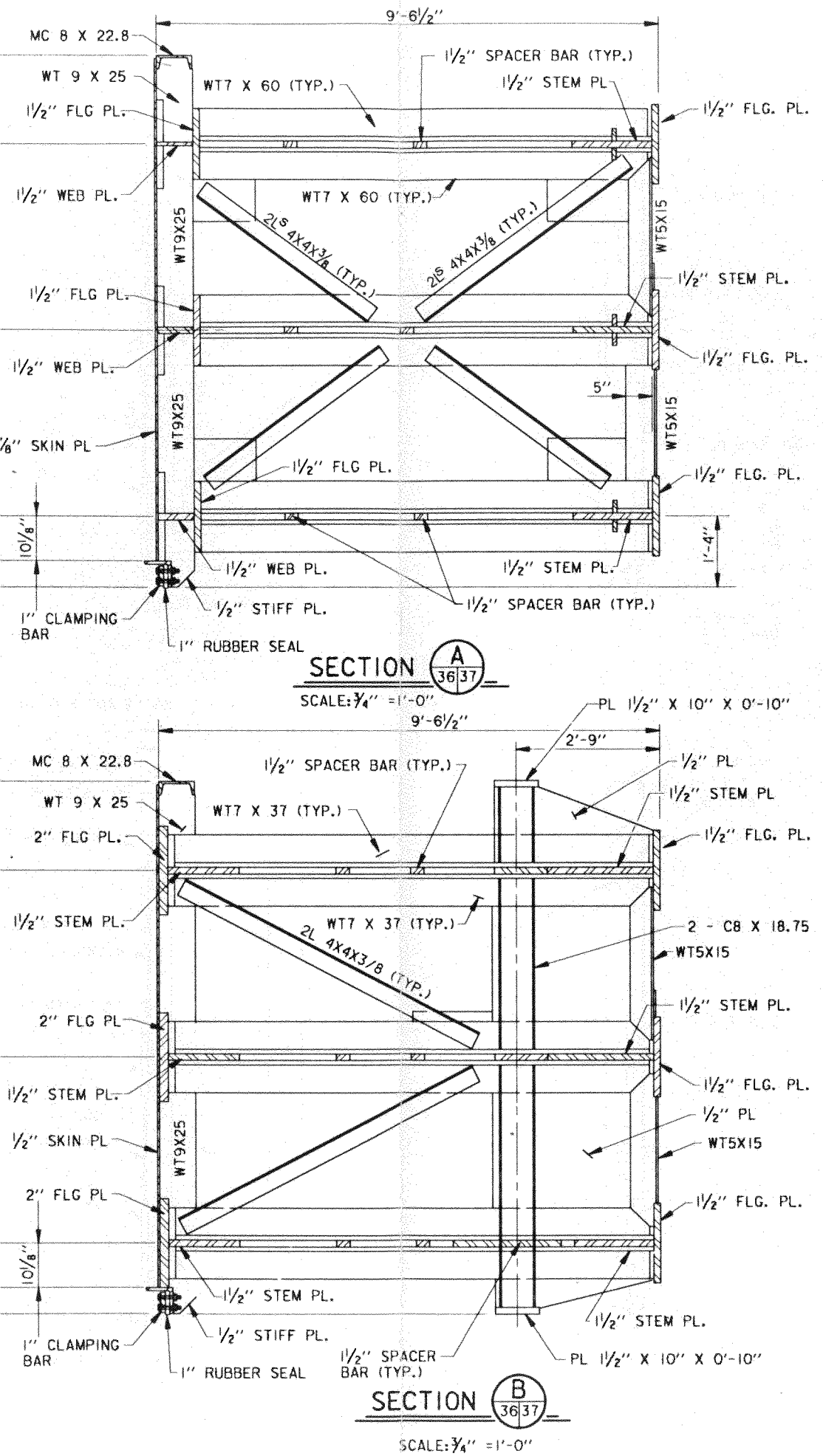

SECTION A (36|37)

SCALE: ¾" =1'-0"

SECTION B (36|37)

SCALE: ¾" =1'-0"

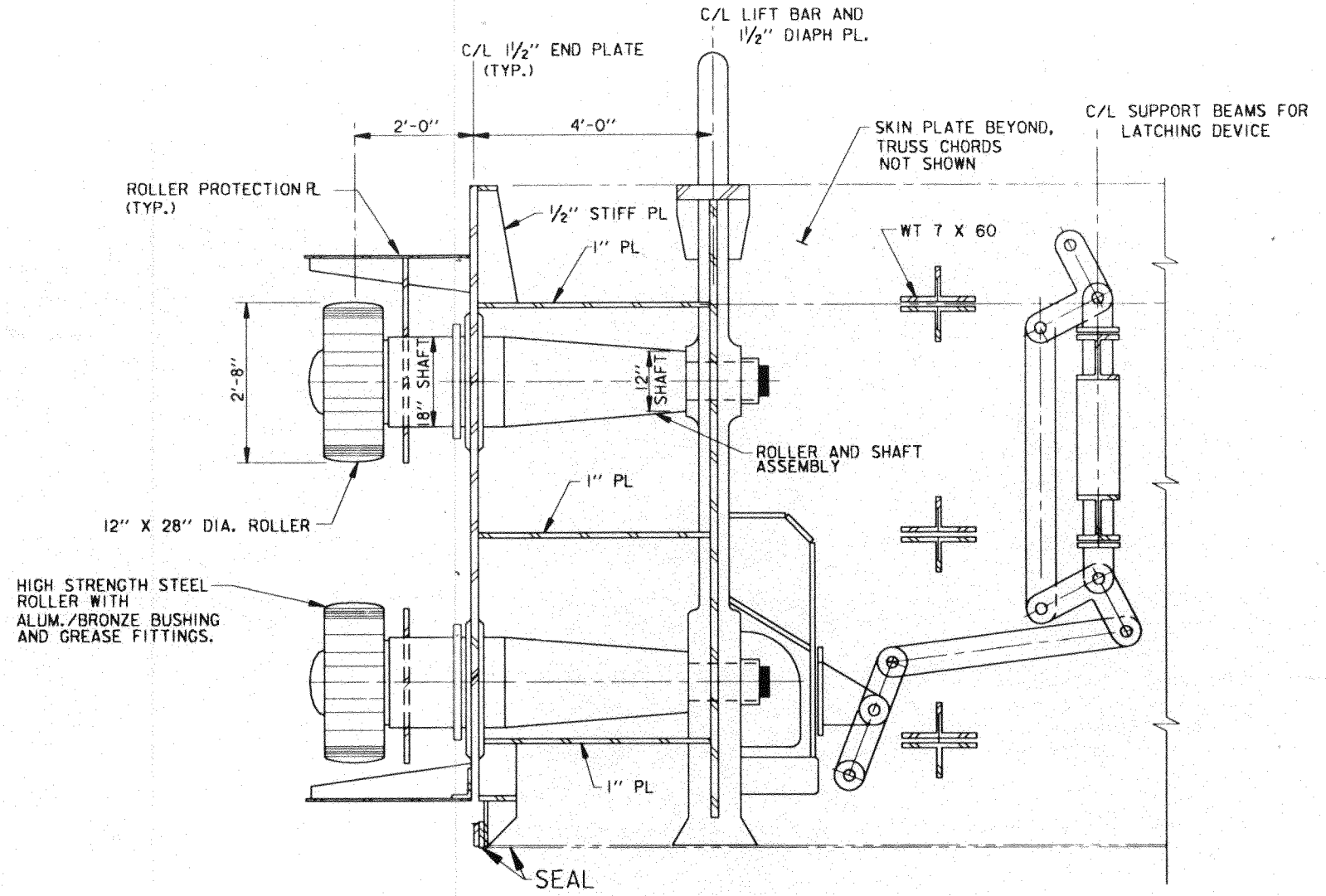

SECTION C (36|37)

SCALE: ¾" =1'-0"

SCALE: ¾" = 1'- 0"

12" 0 1' 2' 3' 4' 5'

MISSISSIPPI RIVER - GULF OUTLET
NEW LOCK AND CONNECTING CHANNELS
(INDUSTRIAL CANAL LOCK REPLACEMENT)
FEASIBILITY STUDY
NORTH OF CLAIBORNE AVE. SITE

BULKHEAD SECTIONS SHIP AND BARGE LOCK

U.S. ARMY ENGINEER DISTRICT, NEW ORLEANS
CORPS OF ENGINEERS
NEW ORLEANS, LOUISIANA

DESIGNED BY:	MHG	PLOT SCALE:	PLOT DATE:	CADD FILE: FSBULKS.DGN	
DRAWN BY:	HAT	16	X	FILE NO.	
CHECKED BY:	ADS	DATE: NOVEMBER 1994		H-2-40392	

PLATE B-37

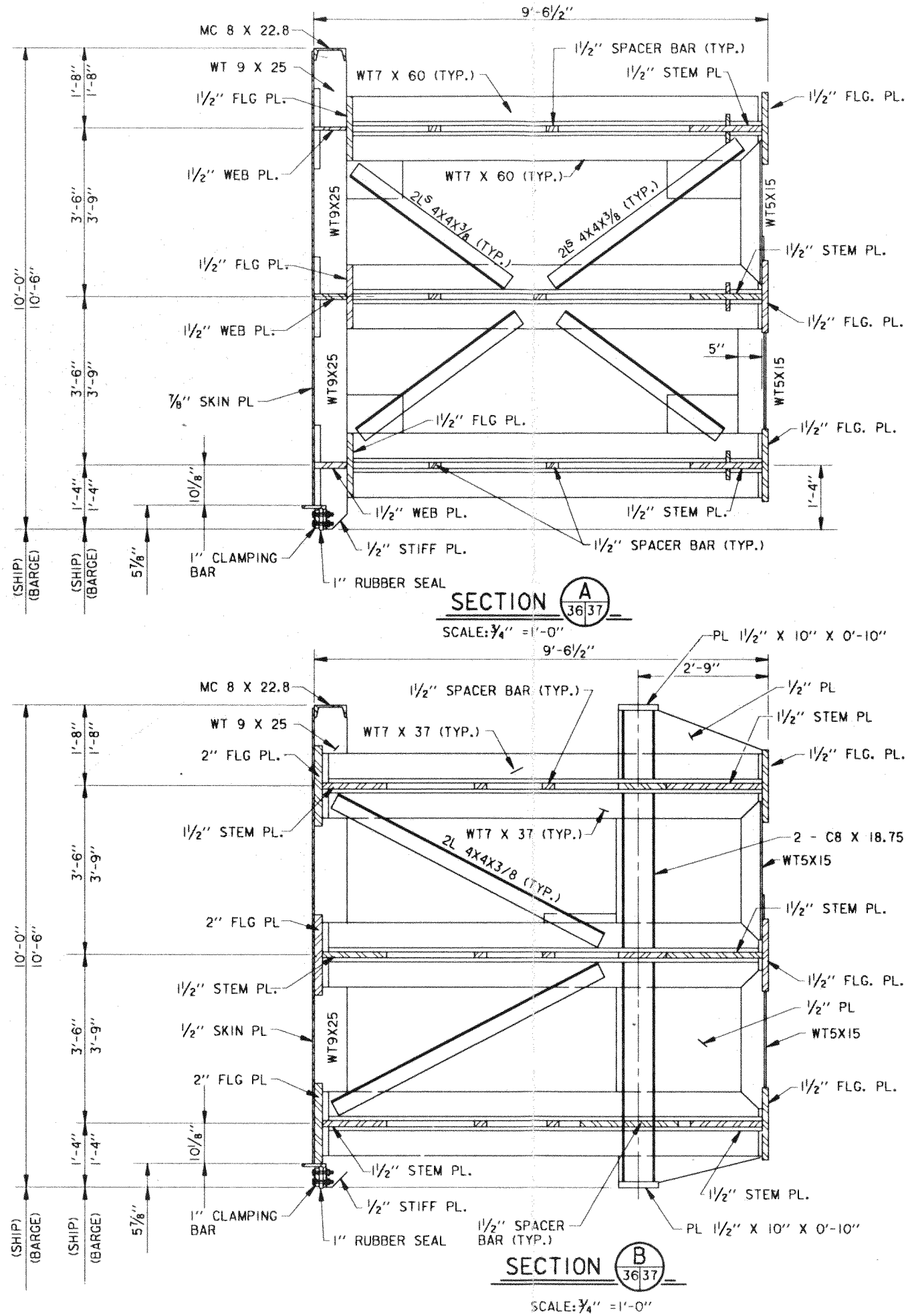

SECTION A 36 37

SCALE: ¾" = 1'-0"

SECTION B 36 37

SCALE: ¾" = 1'-0"

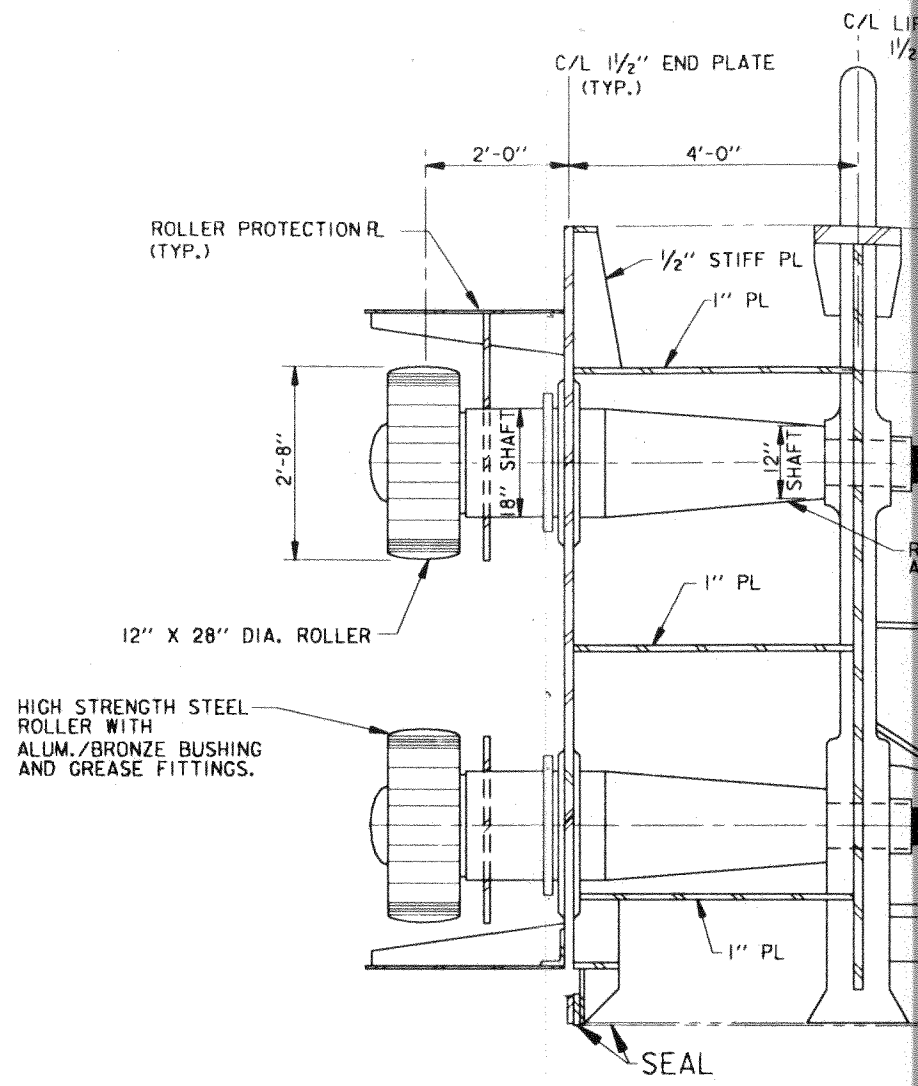

SECTI

SCALE

SCALE: ¾" = 1'- 0"

12" 0 1' 2' 3' 4' 5'

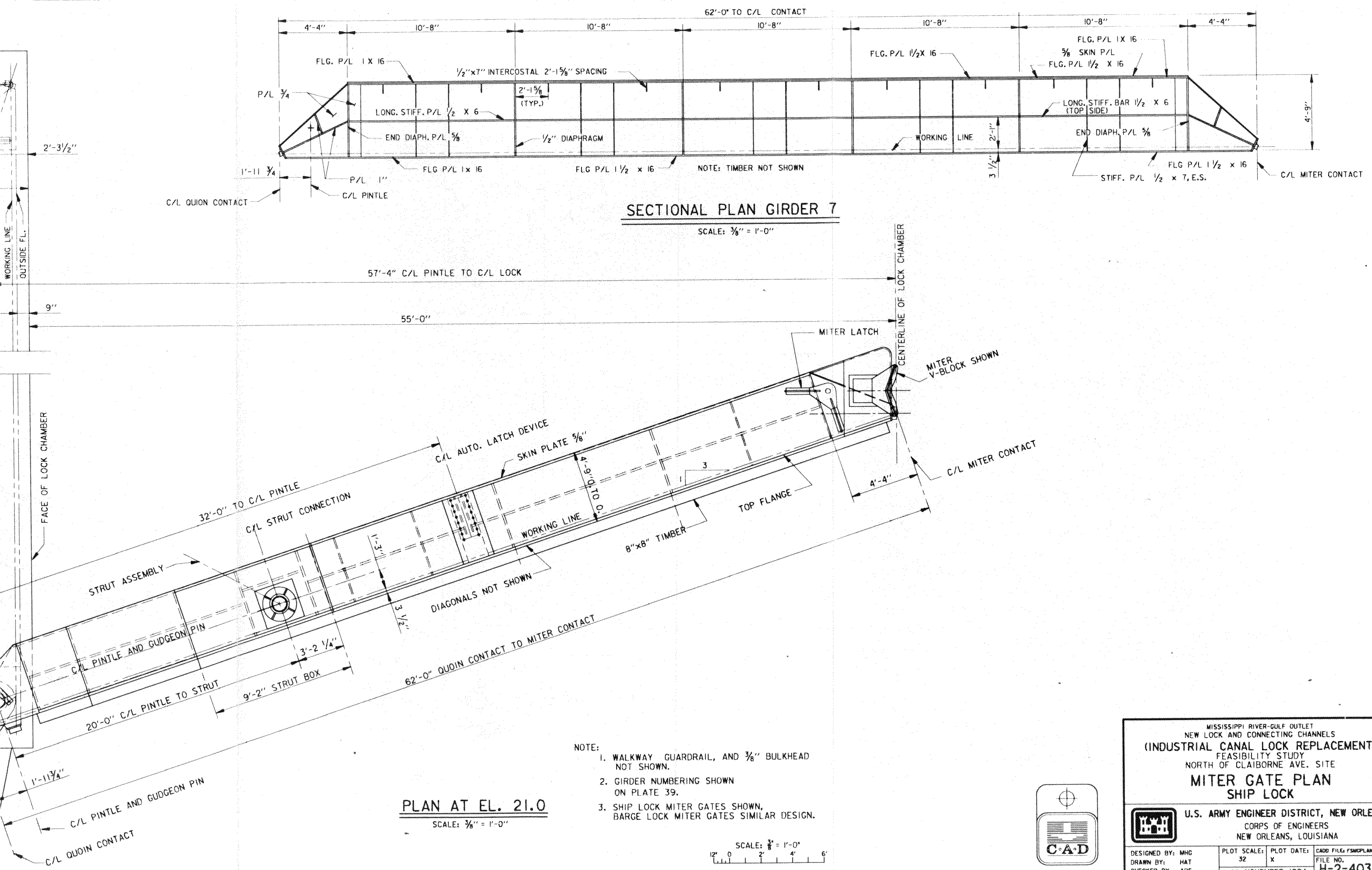

SECTIONAL PLAN GIRDER 7

SCALE: 3/8" = 1'-0"

PLAN AT EL. 21.0

SCALE: 3/8" = 1'-0"

NOTE:
1. WALKWAY GUARDRAIL, AND 3/8" BULKHEAD NOT SHOWN.
2. GIRDER NUMBERING SHOWN ON PLATE 39.
3. SHIP LOCK MITER GATES SHOWN, BARGE LOCK MITER GATES SIMILAR DESIGN.

SCALE: 3/8" = 1'-0"
12" 0 2' 4' 6'

C·A·D

MISSISSIPPI RIVER-GULF OUTLET
NEW LOCK AND CONNECTING CHANNELS
(INDUSTRIAL CANAL LOCK REPLACEMENT)
FEASIBILITY STUDY
NORTH OF CLAIBORNE AVE. SITE

MITER GATE PLAN
SHIP LOCK

U.S. ARMY ENGINEER DISTRICT, NEW ORLEANS
CORPS OF ENGINEERS
NEW ORLEANS, LOUISIANA

DESIGNED BY: MHG	PLOT SCALE: 32	PLOT DATE: X	CADD FILE: FSMGPLAN.DGN
DRAWN BY: HAT			FILE NO. H-2-40392
CHECKED BY: ADS	DATE: NOVEMBER 1994		

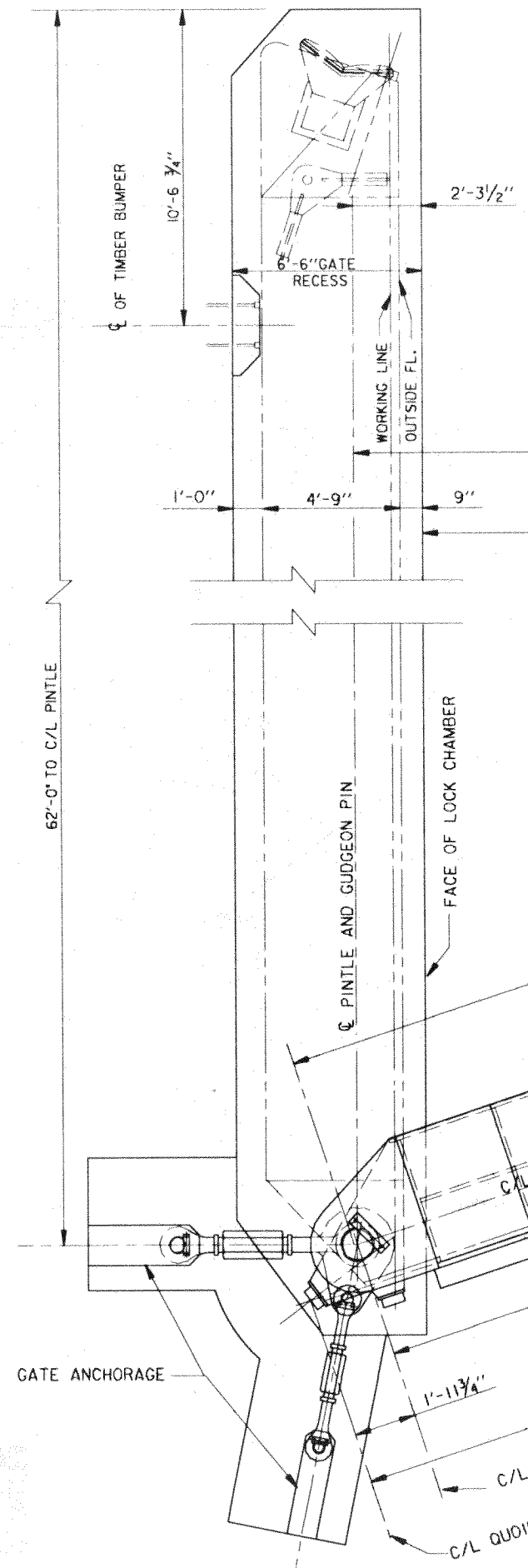

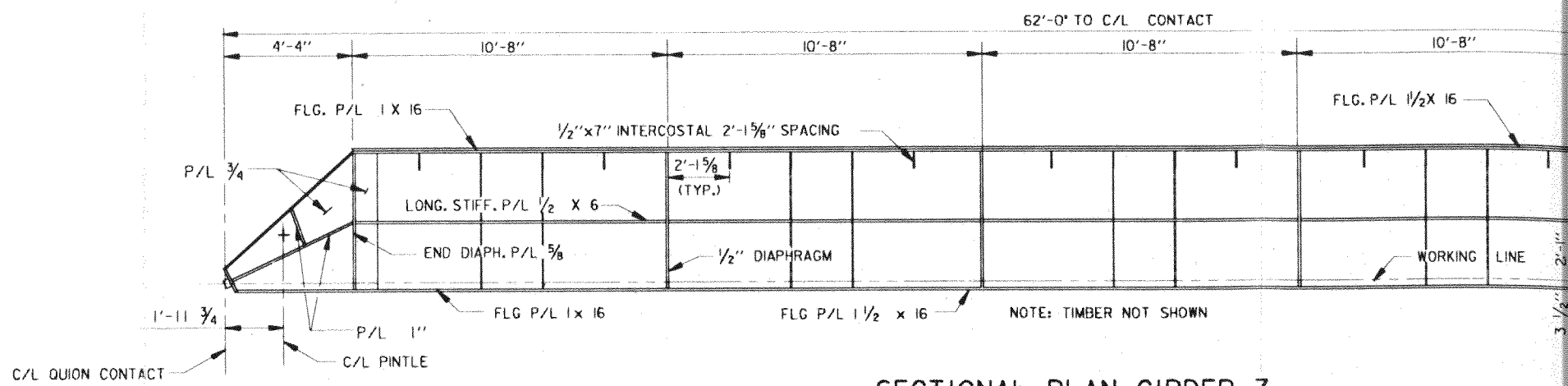

SECTIONAL PLAN GIRDER 7

SCALE: 3/8" = 1'-0"

PLAN AT EL. 21.0

SCALE: 3/8" = 1'-0"

NOTE:
1. WALKWAY GUARDRAIL, AND 3/8" BULKHEAD NOT SHOWN.
2. GIRDER NUMBERING SHOWN ON PLATE 39.
3. SHIP LOCK MITER GATES SHOWN, BARGE LOCK MITER GATES SIMILAR DESIGN.

SCALE: 3/8" = 1'-0"
12" 0 2' 4' 6'

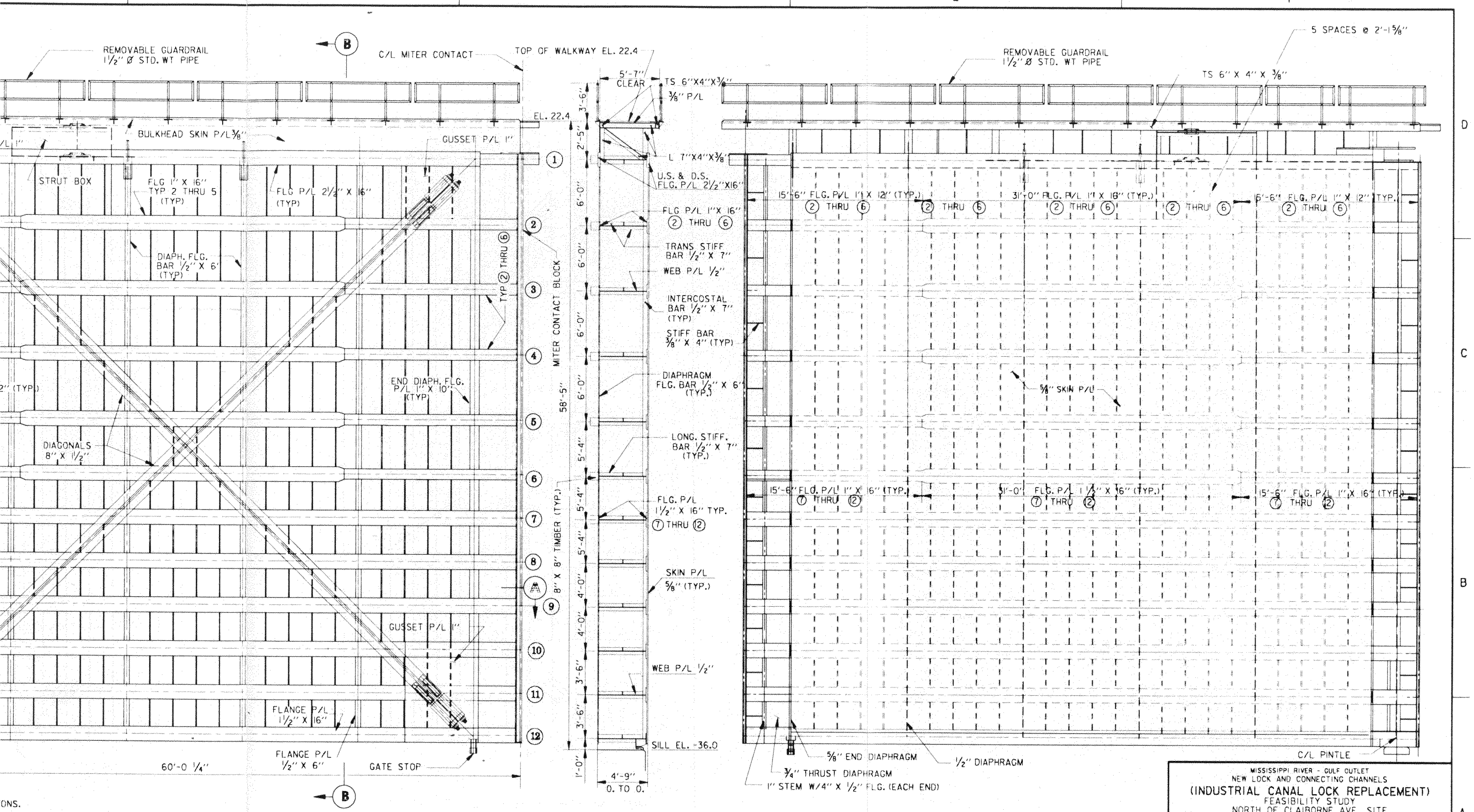

ONS.
ASTM A-36 STEEL
LL CONFORM

LOW WATER SIDE ELEVATION

SCALE: ¼" = 1'- 0"

SECTION B

HIGH WATER SIDE ELEVATION

SCALE: ¼" = 1'- 0"

UIRED, ALL SETS ARE SIMILAR.
OWN,
IMILAR.

SCALE: ¼" = 1'- 0"

12" 0 5' 10' 15' 20'

C·A·D

MISSISSIPPI RIVER - GULF OUTLET
NEW LOCK AND CONNECTING CHANNELS
(INDUSTRIAL CANAL LOCK REPLACEMENT)
FEASIBILITY STUDY
NORTH OF CLAIBORNE AVE. SITE

MITER GATE ELEV. AND SECTION

SHIP LOCK

U.S. ARMY ENGINEER DISTRICT, NEW ORLEANS
CORPS OF ENGINEERS
NEW ORLEANS, LOUISIANA

DESIGNED BY: MHG	PLOT SCALE: 48	PLOT DATE: X	CADD FILE: FSMGESEC.DGN	
DRAWN BY: HAT			FILE NO.	
CHECKED BY: ADS	DATE: NOVEMBER 1994		H-2-40392	

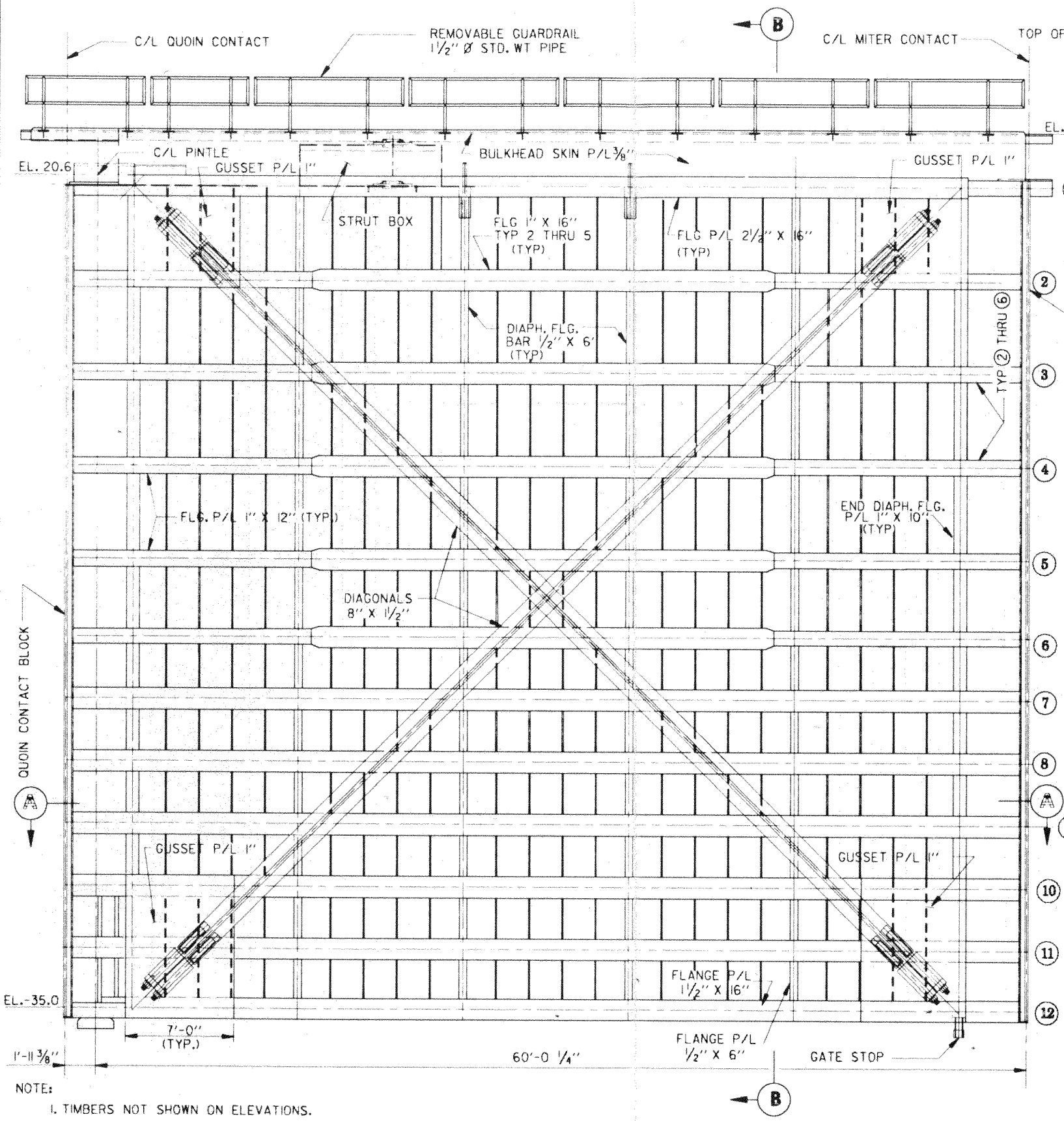

NOTE:

1. TIMBERS NOT SHOWN ON ELEVATIONS.
2. MEMBERS AND PLATE SHALL BE ASTM A-36 STEEL EXCEPT TS SECTIONS WHICH SHALL CONFORM TO ASTM A-500 GR. B.
3. FOUR SETS OF MITER GATES REQUIRED, ALL SETS ARE SIMILAR.
4. SHIP LOCK MITER GATES ARE SHOWN, BARGE LOCK MITER GATES ARE SIMILAR.

LOW WATER SIDE ELEVATION

SCALE: ¼" = 1'- 0"

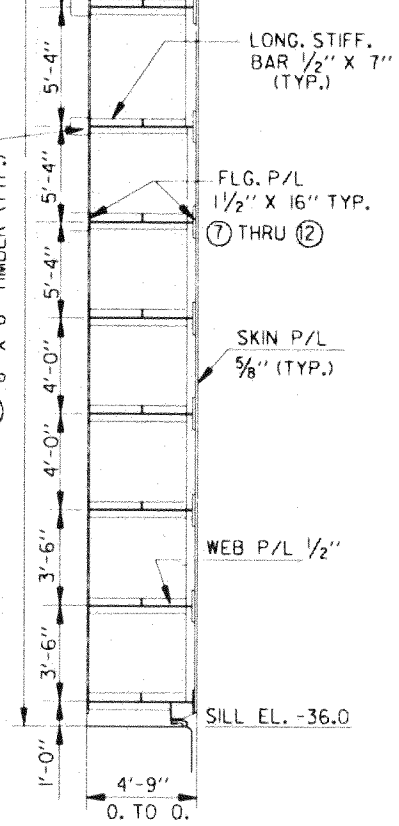

SECTION (B)

SCALE: ¼" = 1'- 0"

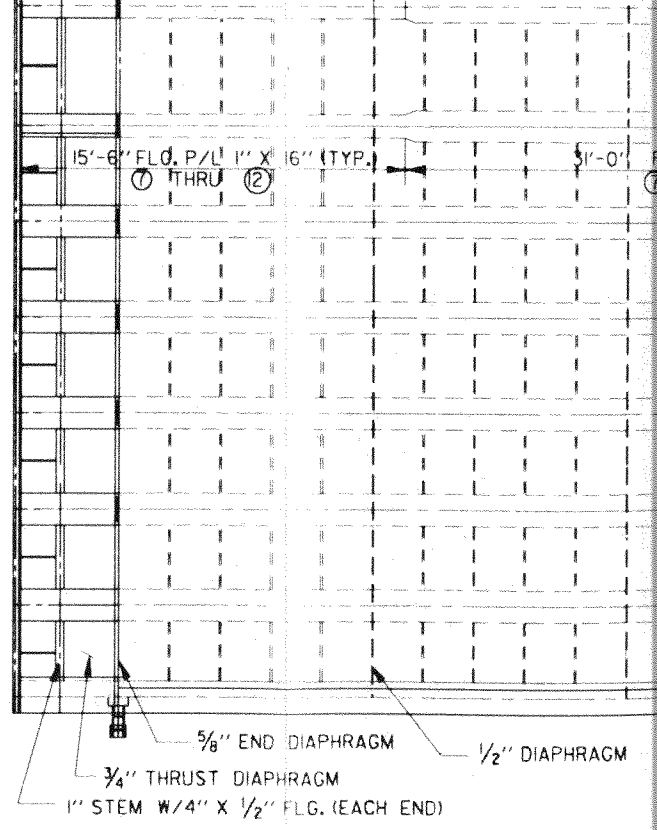

HIGH WATER SIDE

SCALE: ¼" = 1'

SCALE: ¼" = 1'- 0"

12" 0 5' 10' 15' 20'

C·A·D

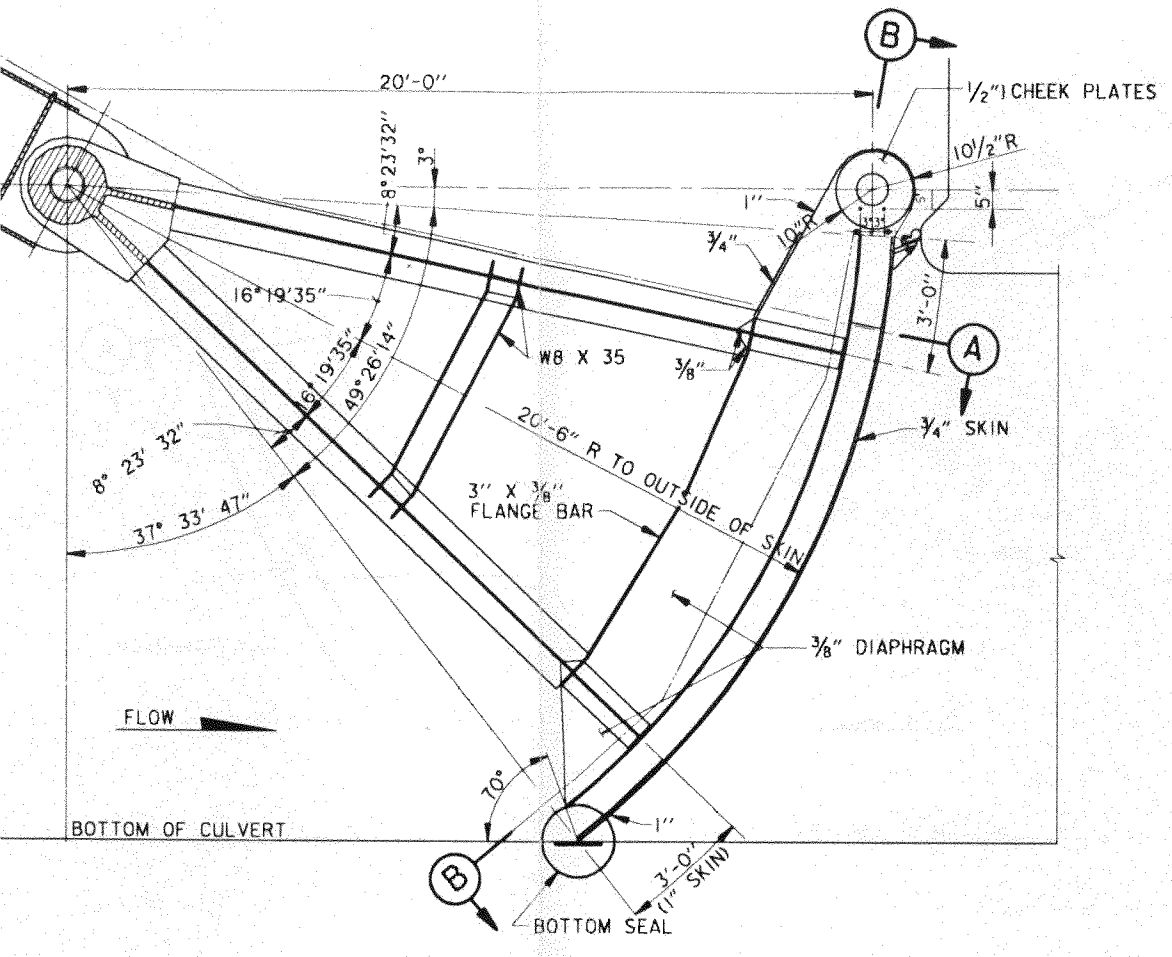

ELEVATION
N.T.S.

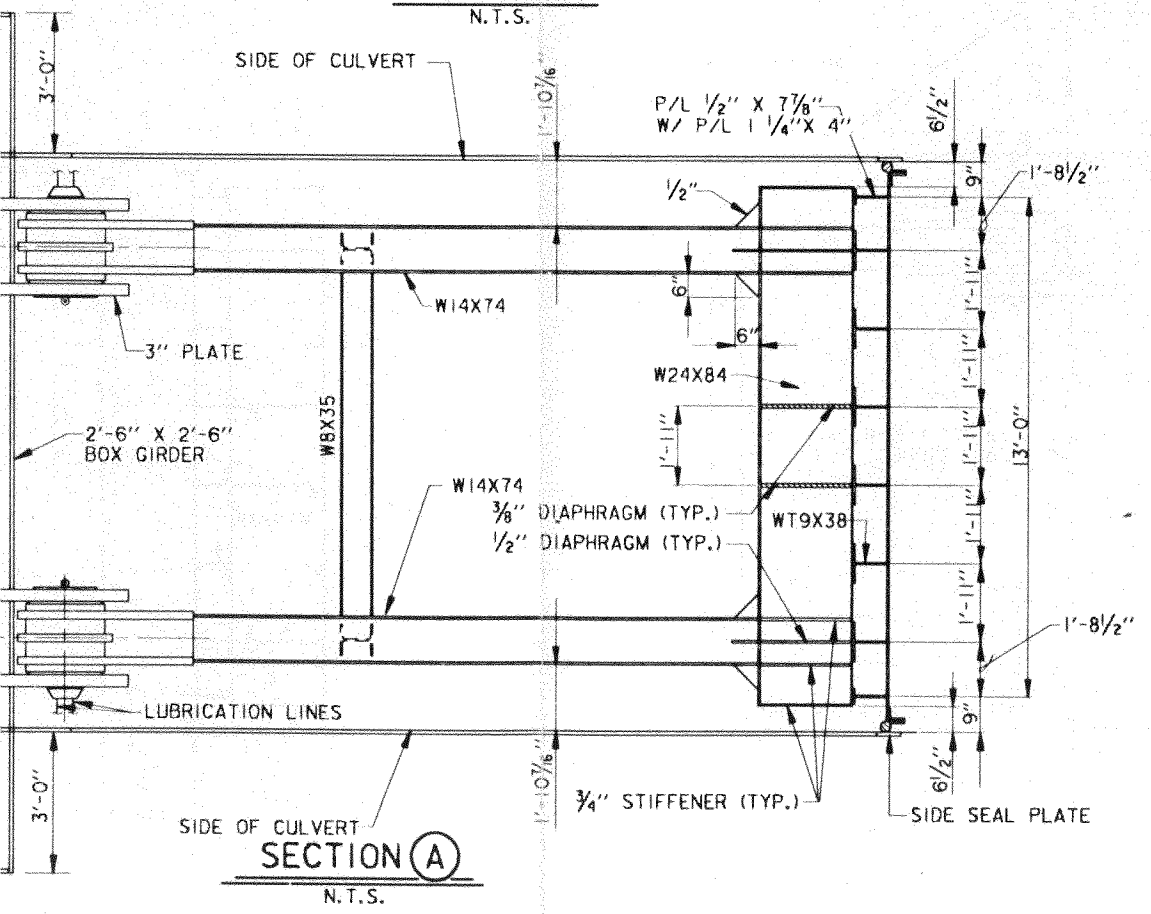

SECTION (A)
N.T.S.

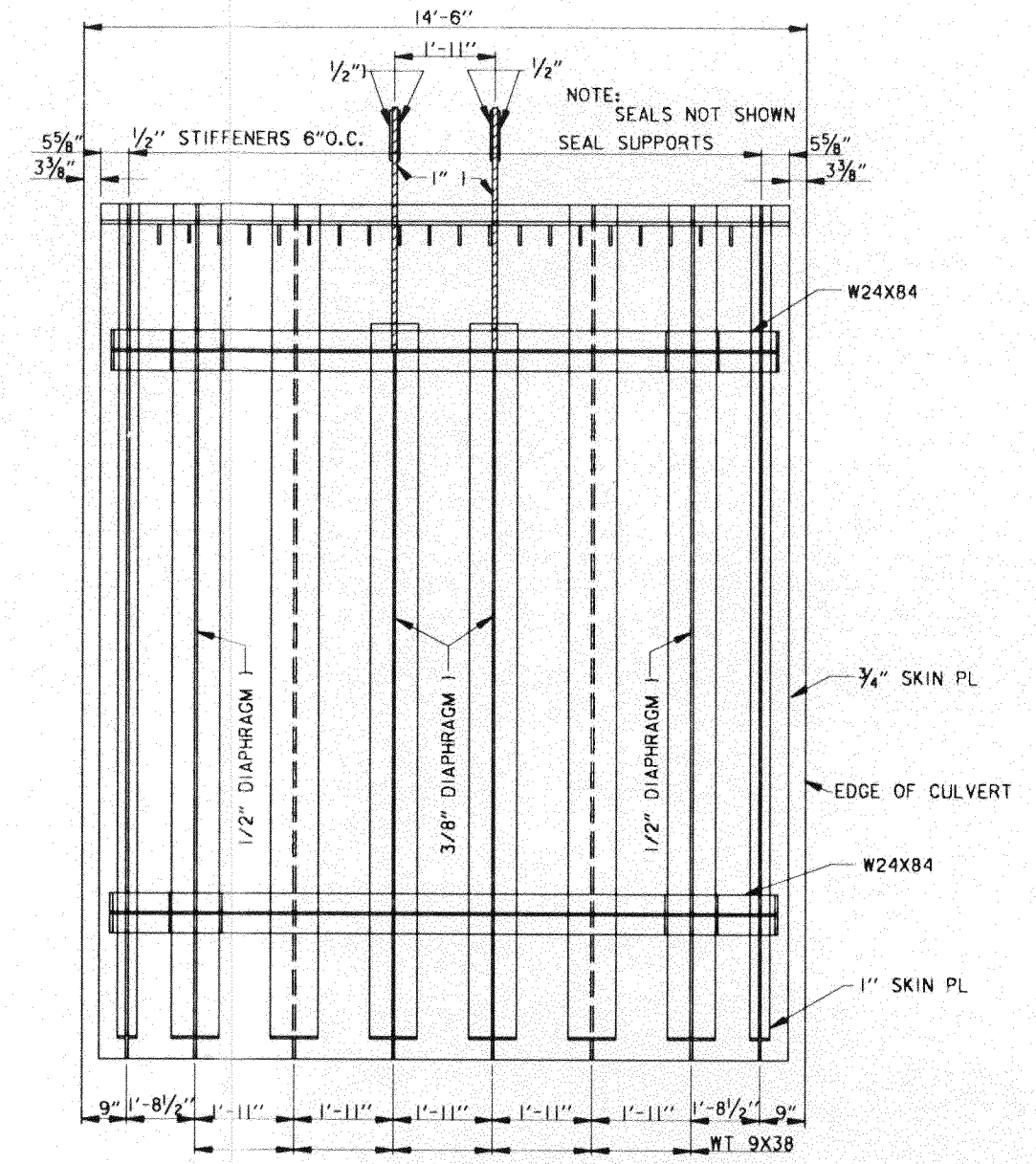

SECTION (B)
N.T.S.

NOTE; ALL PLATE AND MEMBERS
CONSTRUCTED FROM A588 GRADE 50 STEEL.

MISSISSIPPI RIVER - GULF OUTLET
NEW LOCK AND CONNECTING CHANNELS
(INDUSTRIAL CANAL LOCK REPLACEMENT)
FEASIBILITY STUDY
NORTH OF CLAIBORNE AVE. SITE

LOCK CULVERT VALVE
900' BARGE LOCK

U.S. ARMY ENGINEER DISTRICT, NEW ORLEANS
CORPS OF ENGINEERS
NEW ORLEANS, LOUISIANA

DESIGNED BY: MHG	PLOT SCALE: 24	PLOT DATE: X	CADD FILE: FSTGATE.DGN
DRAWN BY: HAT			FILE NO. H-2-40392
CHECKED BY: ADS	DATE: NOVEMBER 1994		

PLATE D-10

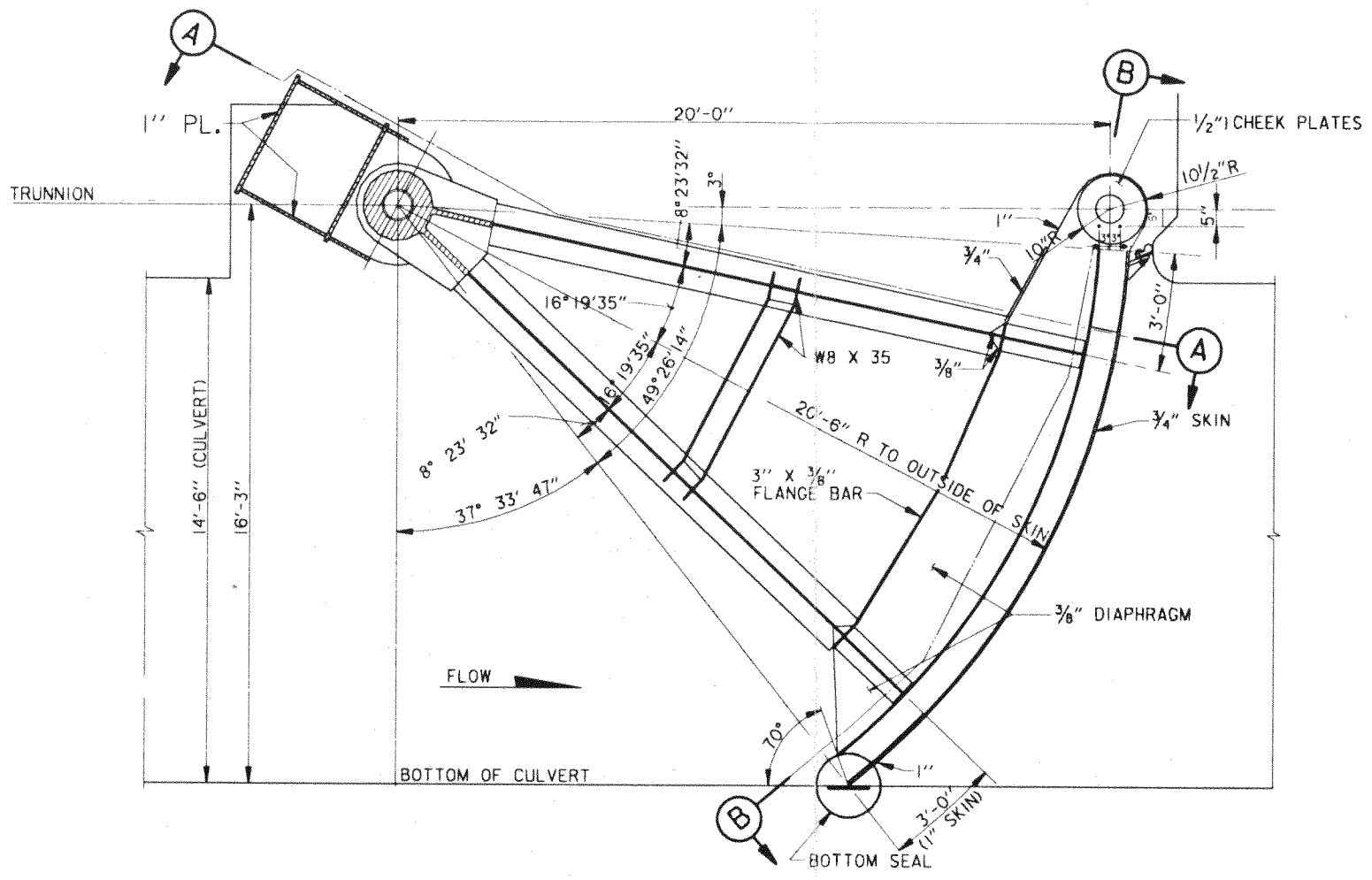

ELEVATION
N.T.S.

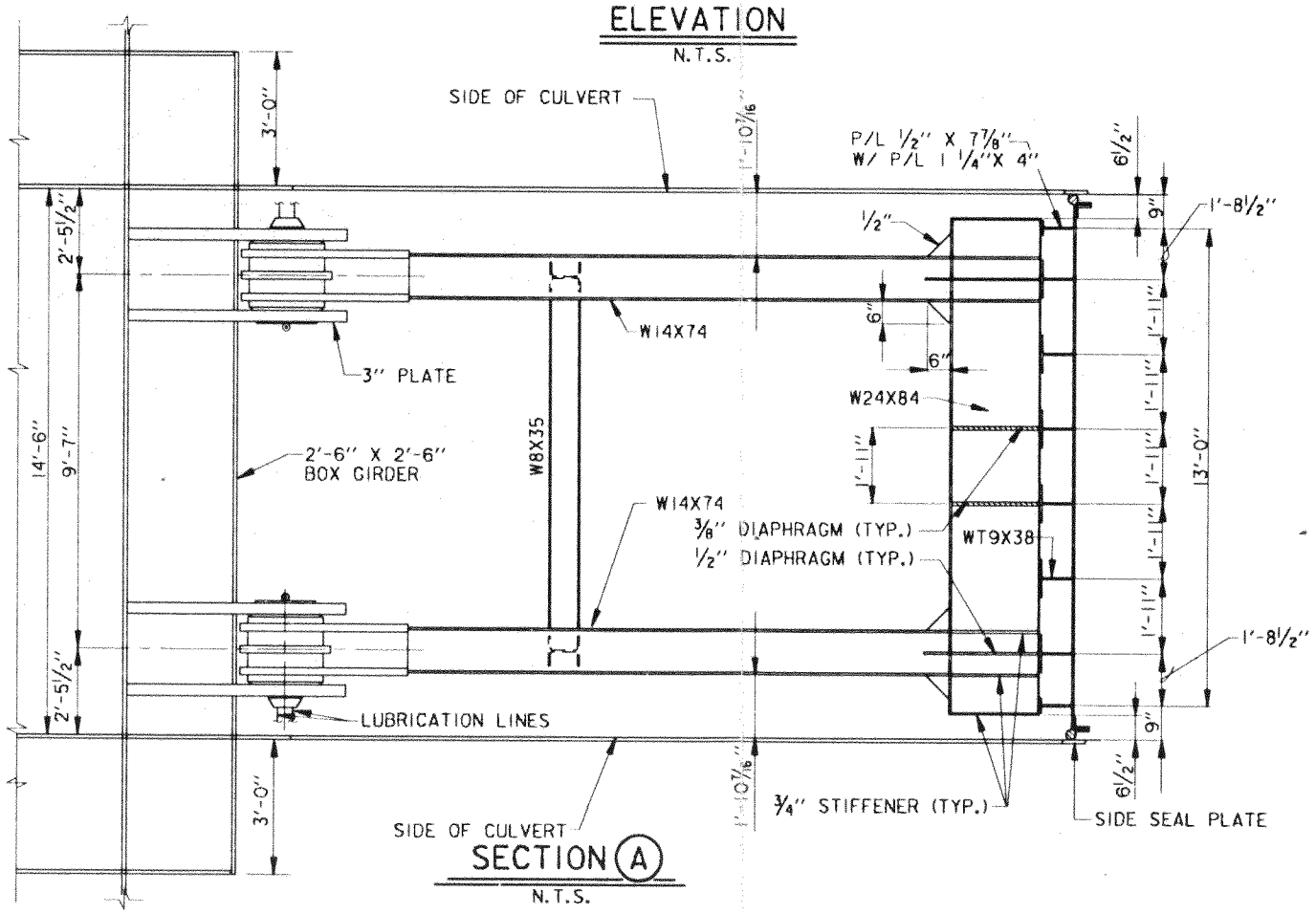

SECTION (A)
N.T.S.

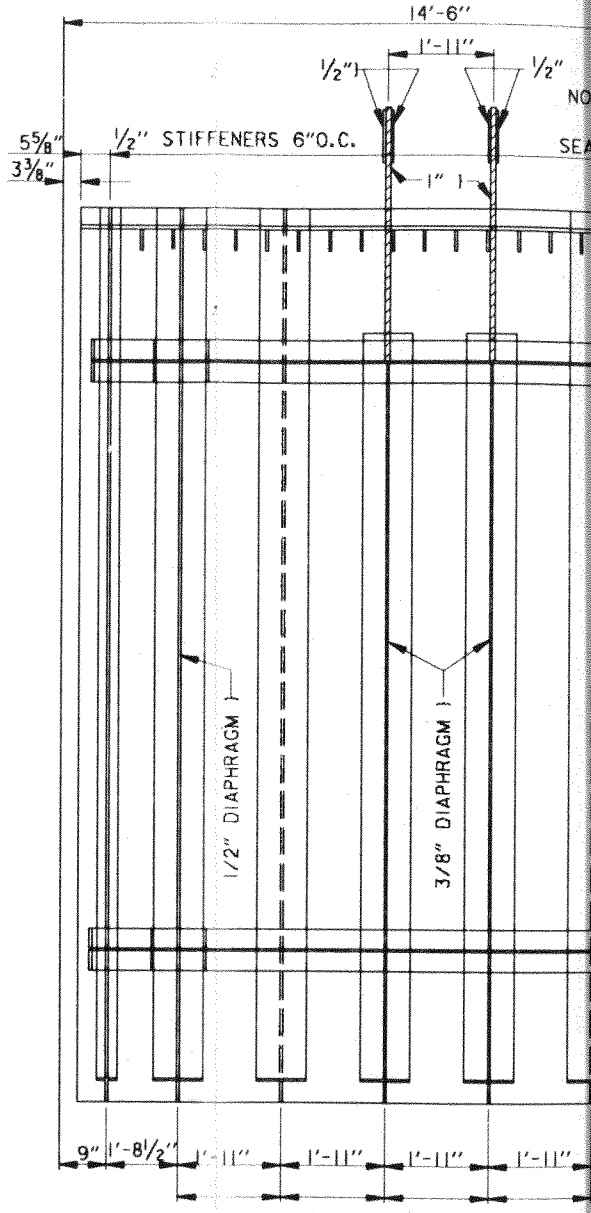

SECTION (B)
N.T.S.

NOTE; ALL PLATE AND MEMBERS CONSTRUCTED FROM A588 GRADE 50 STEEL.

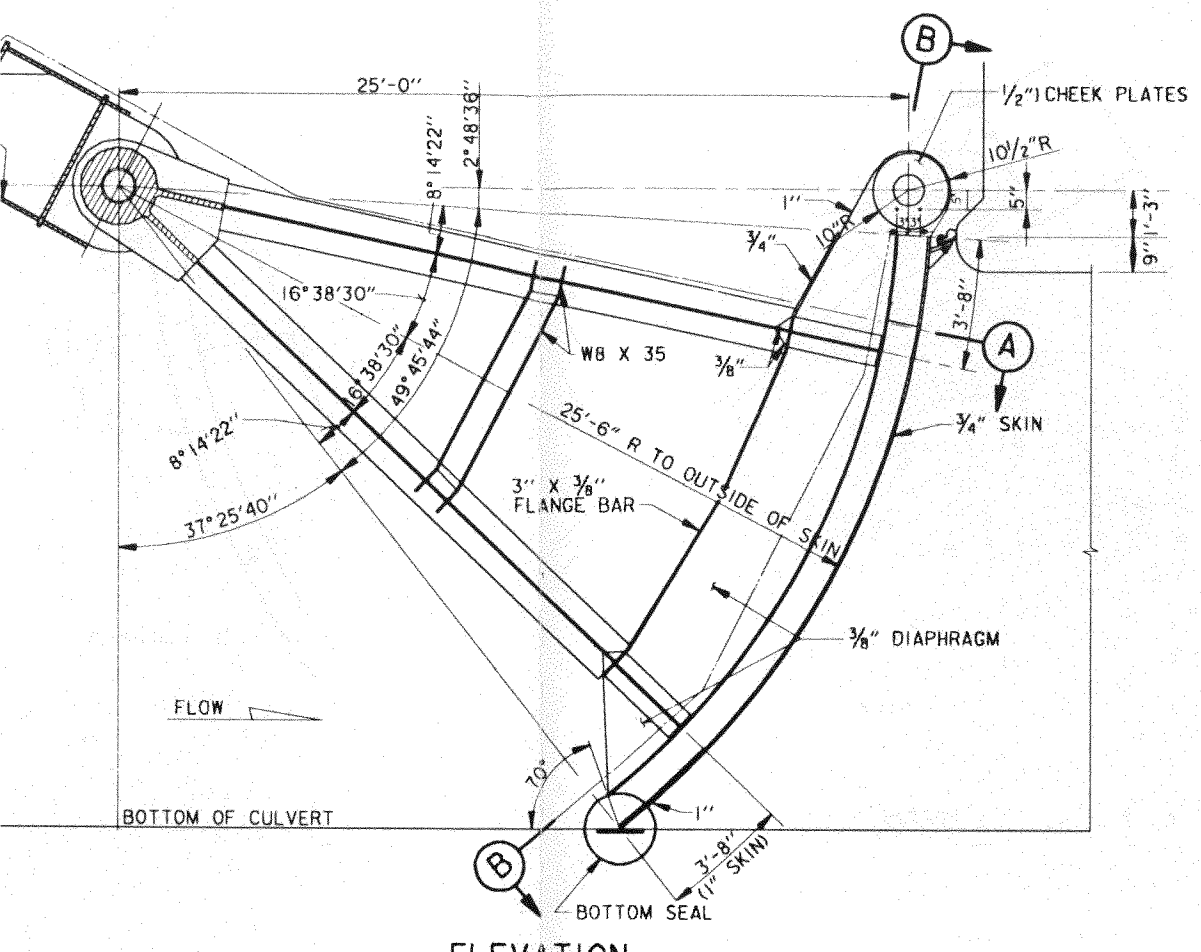

ELEVATION
N.T.S.

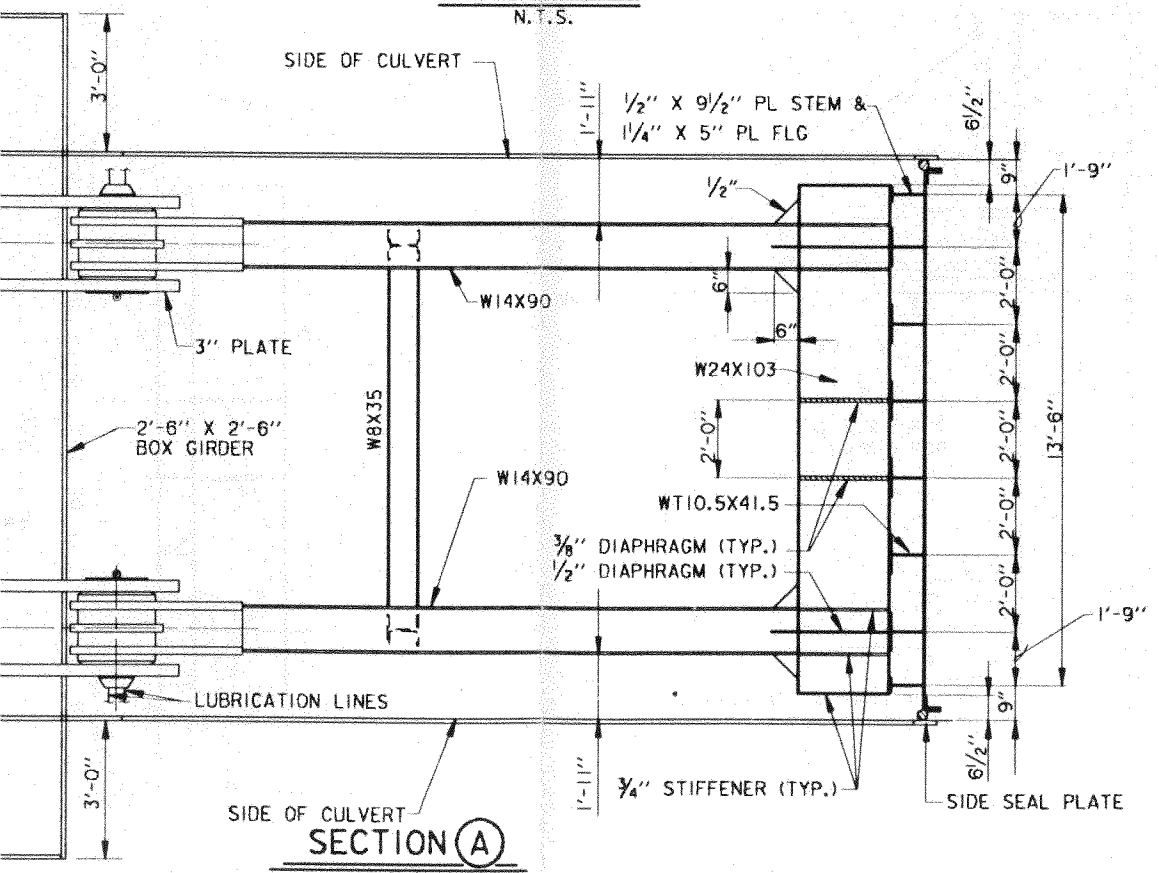

SECTION (A)
N.T.S.

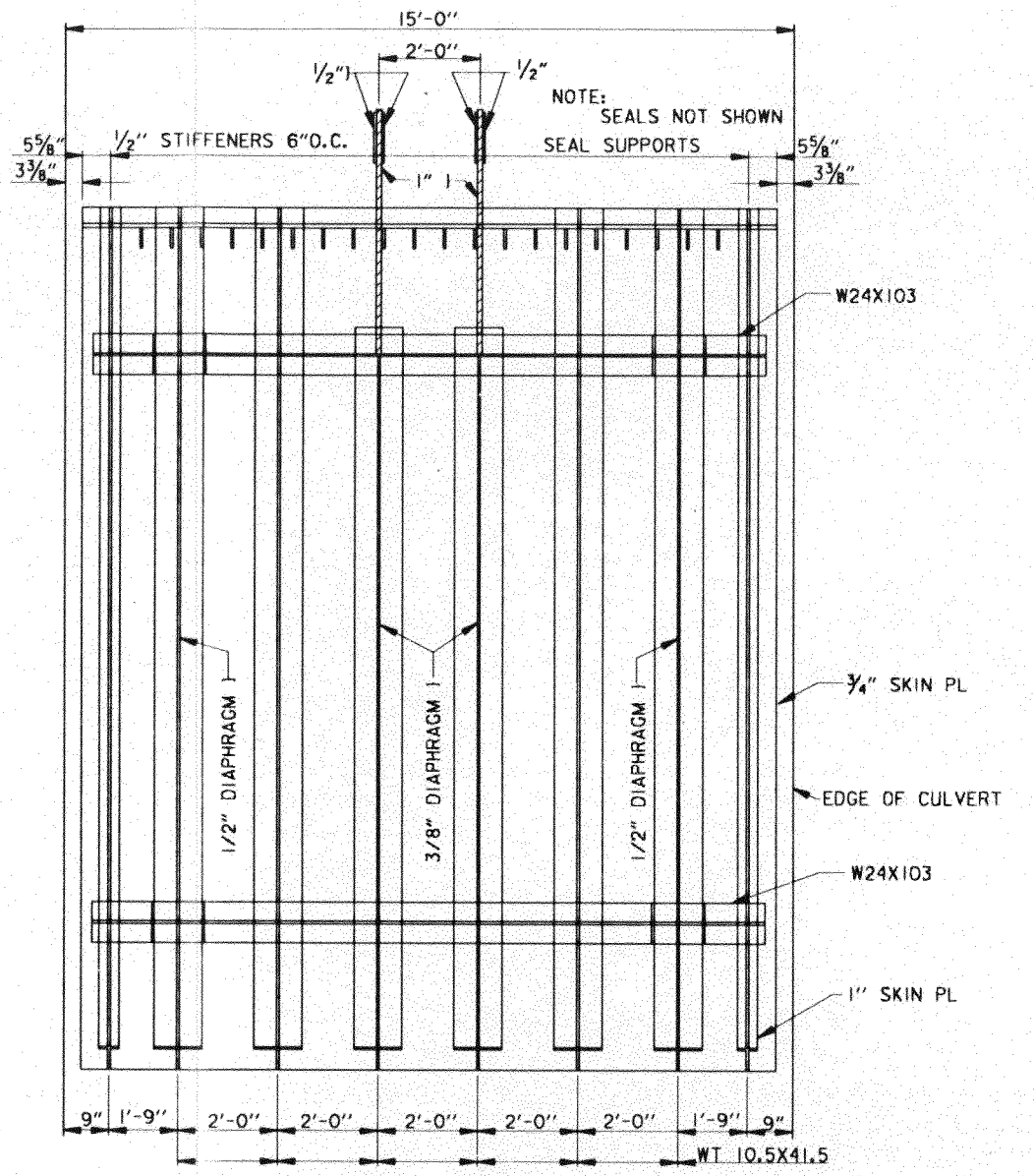

SECTION (B)
N.T.S.

NOTE; ALL PLATE AND MEMBERS
CONSTRUCTED FROM A588 GRADE 50 STEEL.

MISSISSIPPI RIVER - GULF OUTLET
NEW LOCK AND CONNECTING CHANNELS
(INDUSTRIAL CANAL LOCK REPLACEMENT)
FEASIBILITY STUDY
NORTH OF CLAIBORNE AVE. SITE

LOCK CULVERT VALVE
1200' SHIP LOCK

U.S. ARMY ENGINEER DISTRICT, NEW ORLEANS
CORPS OF ENGINEERS
NEW ORLEANS, LOUISIANA

DESIGNED BY: MHG	PLOT SCALE: 24	PLOT DATE:	CADD FILE: TWFSTGAT.DGN	
DRAWN BY: HAT			FILE NO.	H-2-40392
CHECKED BY: ADS	DATE: NOVEMBER 1994			

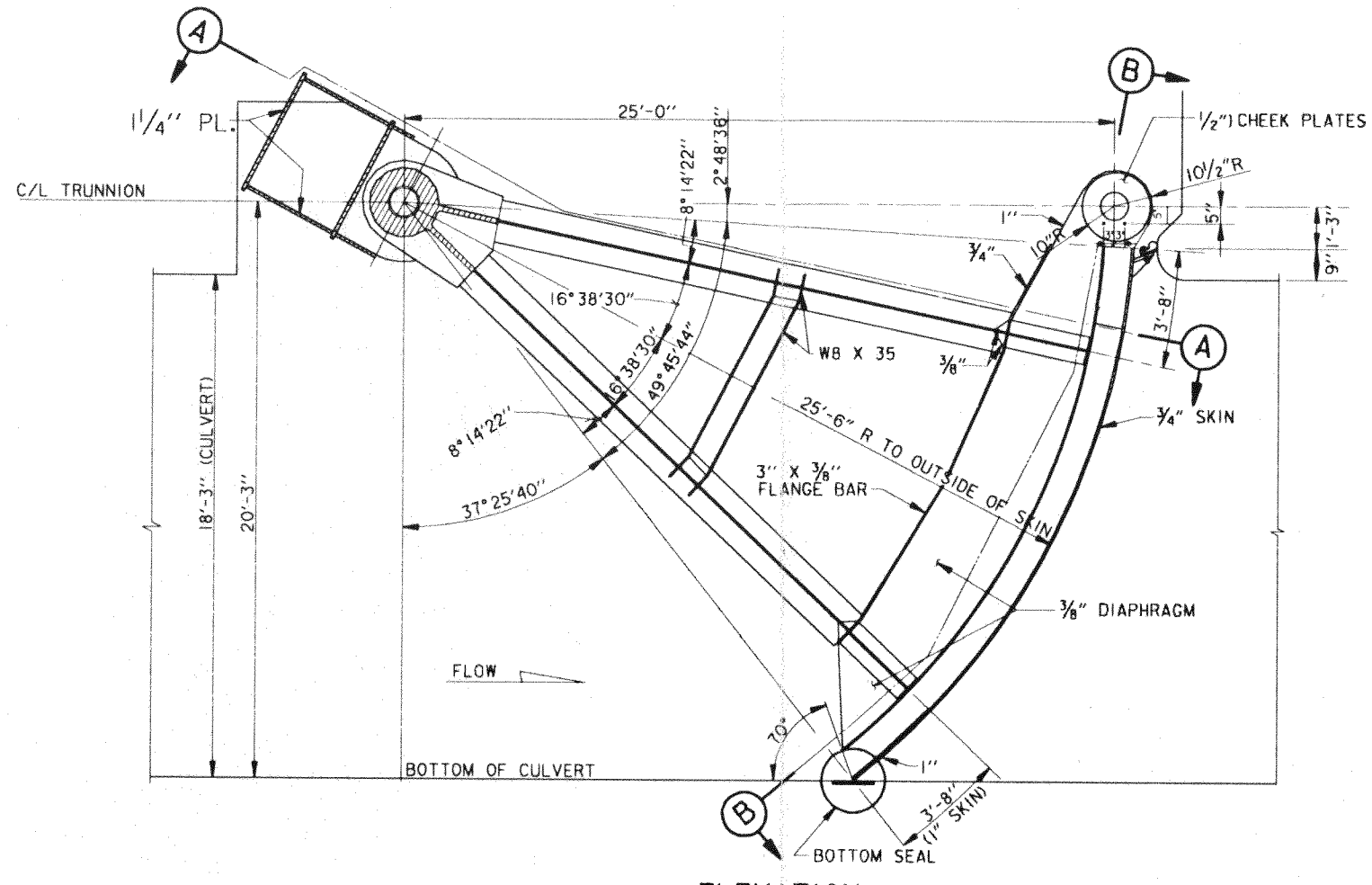

ELEVATION
N.T.S.

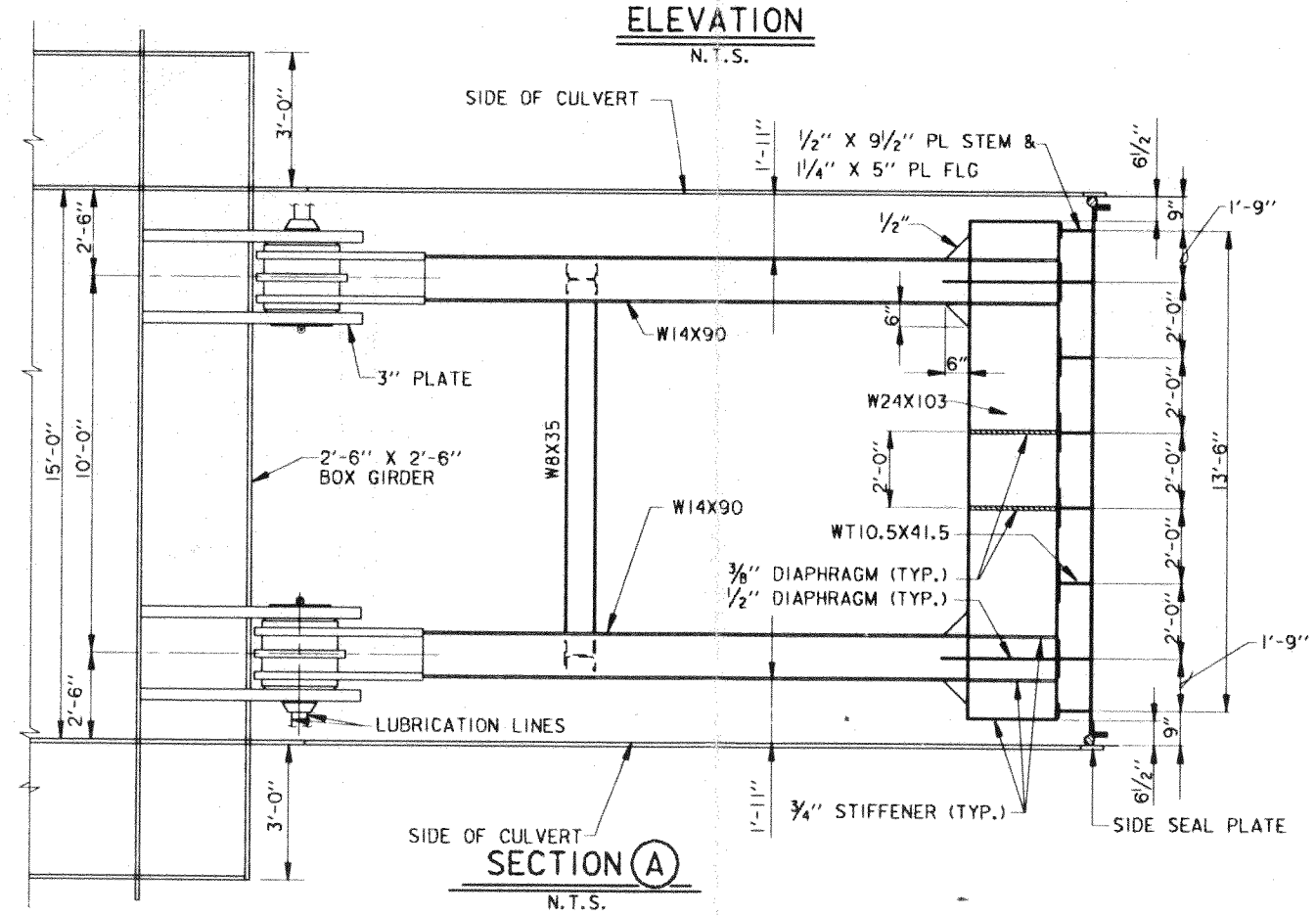

SECTION (A)
N.T.S.

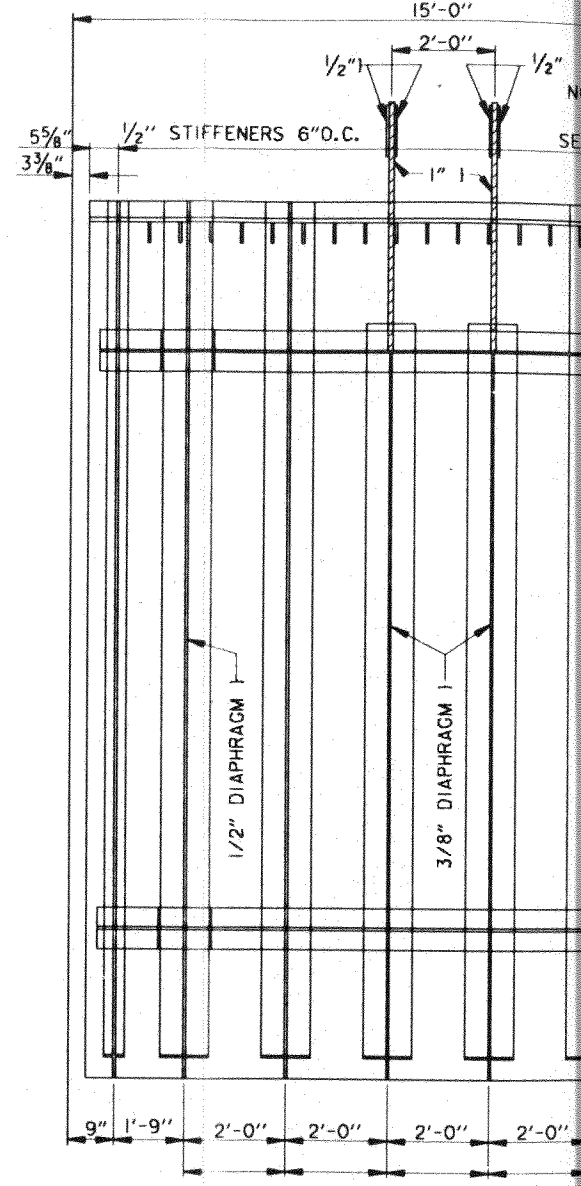

SECTION (B)
N.T.S.

NOTE; ALL PLATE AND MEMBERS
CONSTRUCTED FROM A588 GRADE 50 STEEL.

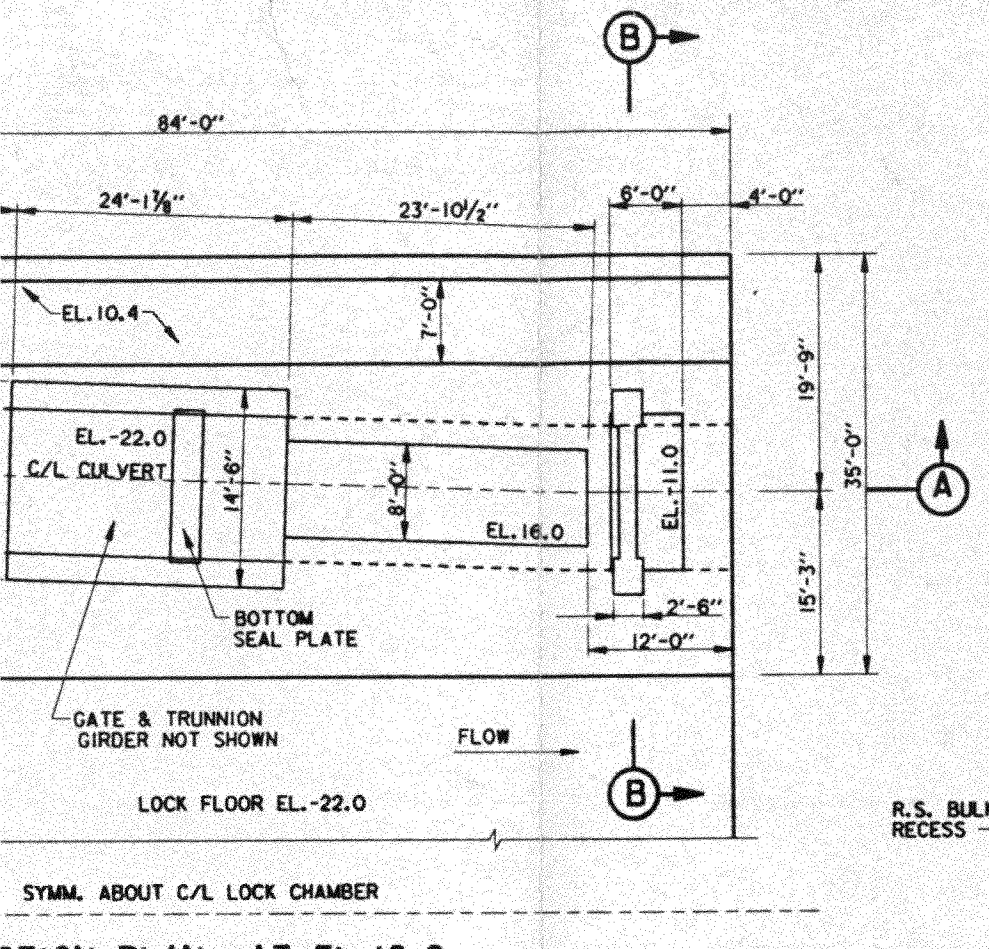

SYMM. ABOUT C/L LOCK CHAMBER

CTION PLAN AT EL.18.0

SCALE: ⅛"=1'-0"

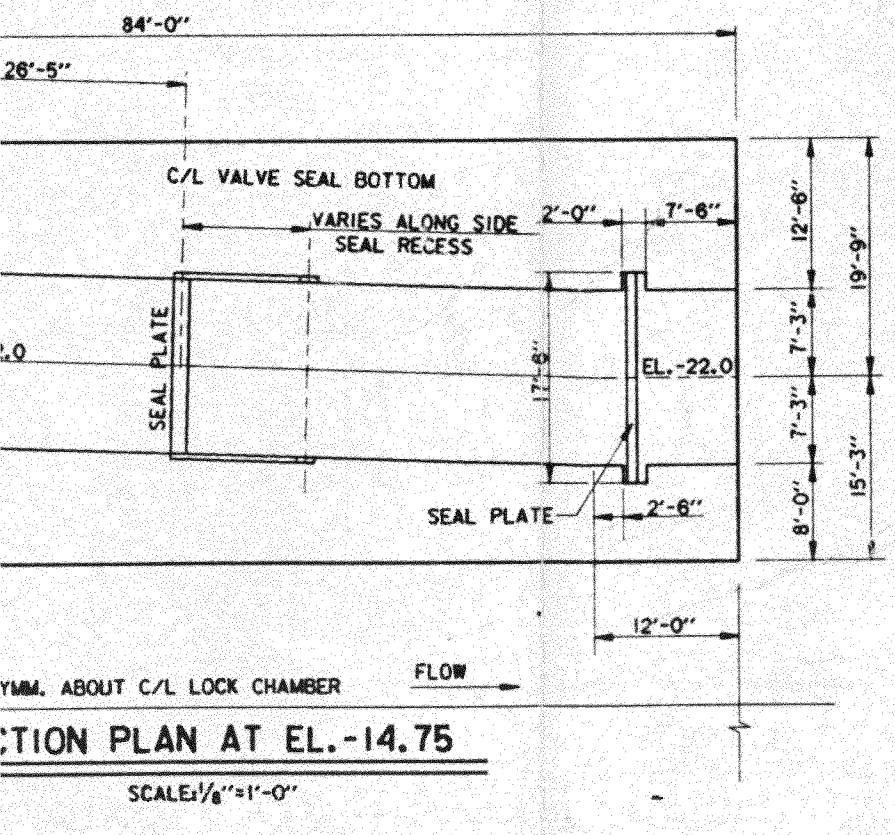

SYMM. ABOUT C/L LOCK CHAMBER

CTION PLAN AT EL.-14.75

SCALE: ⅛"=1'-0"

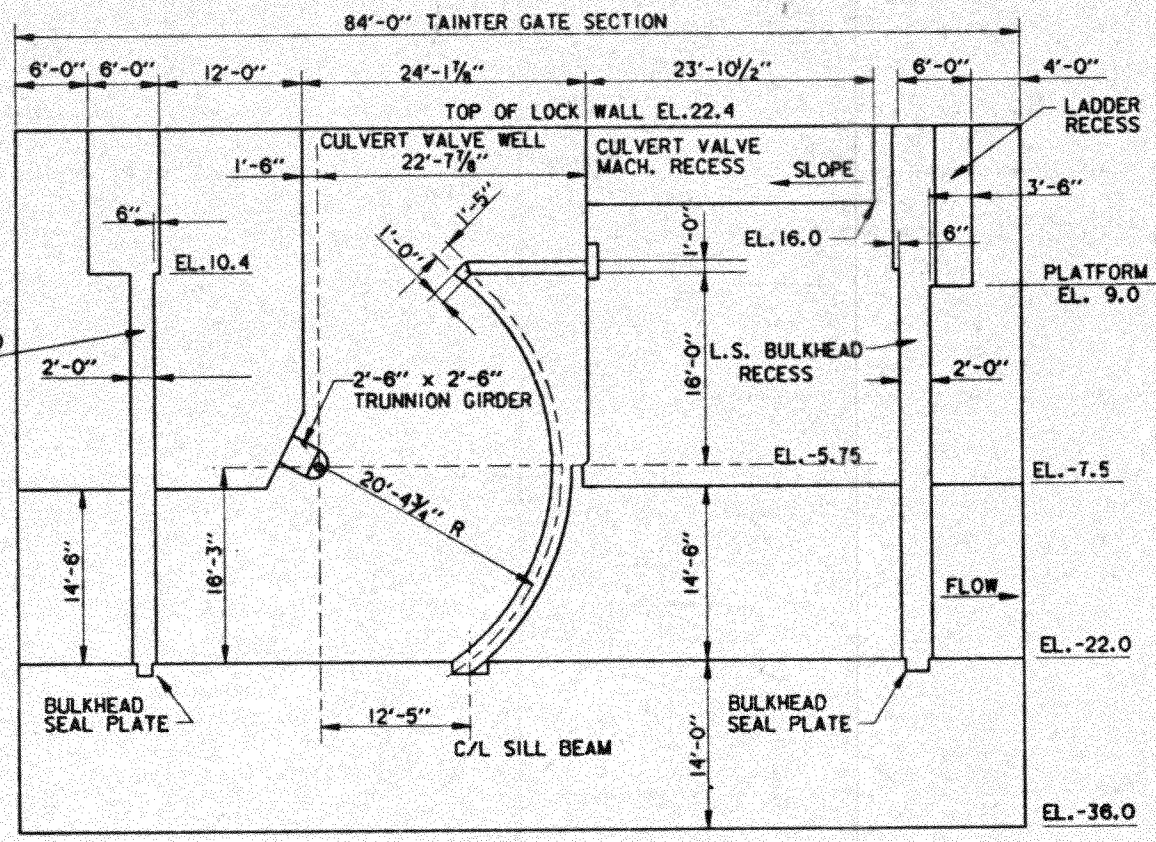

TAINTER VALVE WALL SECTION

SCALE: ⅛"=1'-0"

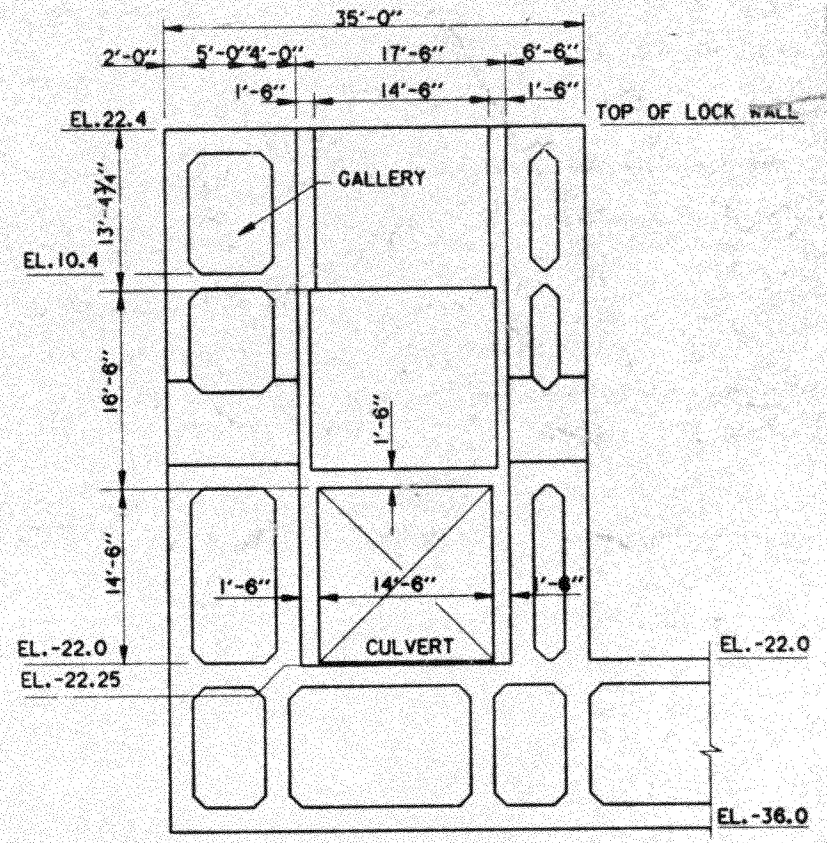

SECTION (B)

SCALE: ⅛"=1'-0"

SCALE: ⅛" = 1'- 0"

0 5' 10' 15' 20' 25'

MISSISSIPPI RIVER - GULF OUTLET
NEW LOCK AND CONNECTION CHANNELS
INDUSTRIAL CANAL LOCK REPLACEMENT
FEASIBILITY STUDY
NORTH OF CLAIBORNE AVENUE SITE

TAINTER VALVE LOCK SECTION 900' SHIP LOCK

U.S. ARMY ENGINEER DISTRICT, NEW ORLEANS
CORPS OF ENGINEERS
NEW ORLEANS, LOUISIANA

DESIGNED BY: MNG	PLOT SCALE: 96	PLOT DATE: SEP 1996	CADD FILE: BARGB4IN.DGN
DRAWN BY: COB			FILE NO. X
CHECKED BY: MNG	DATE: OCTOBER 1998		

PLATE B-4IN

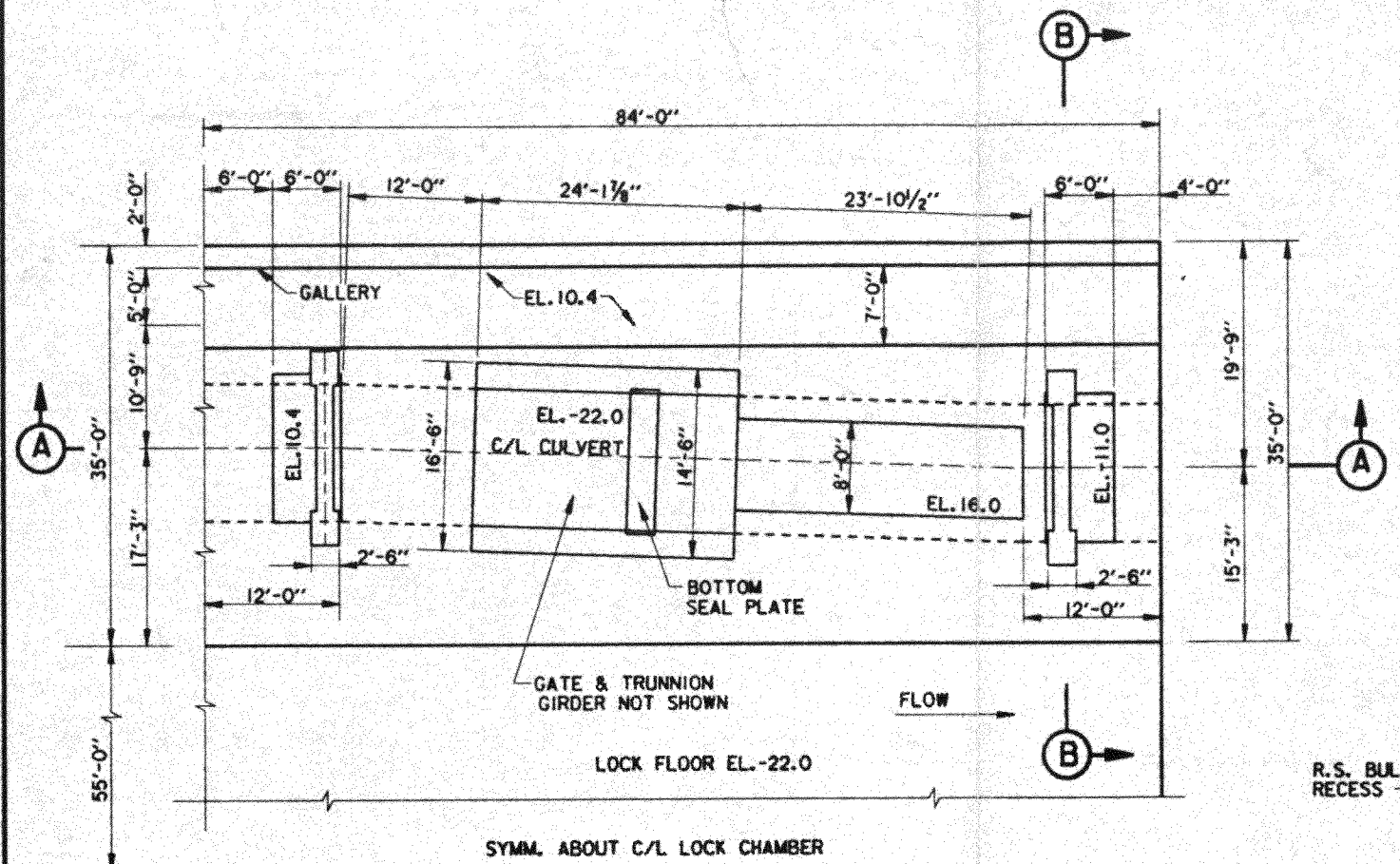

SECTION PLAN AT EL.18.0

SCALE: 1/8" = 1'-0"

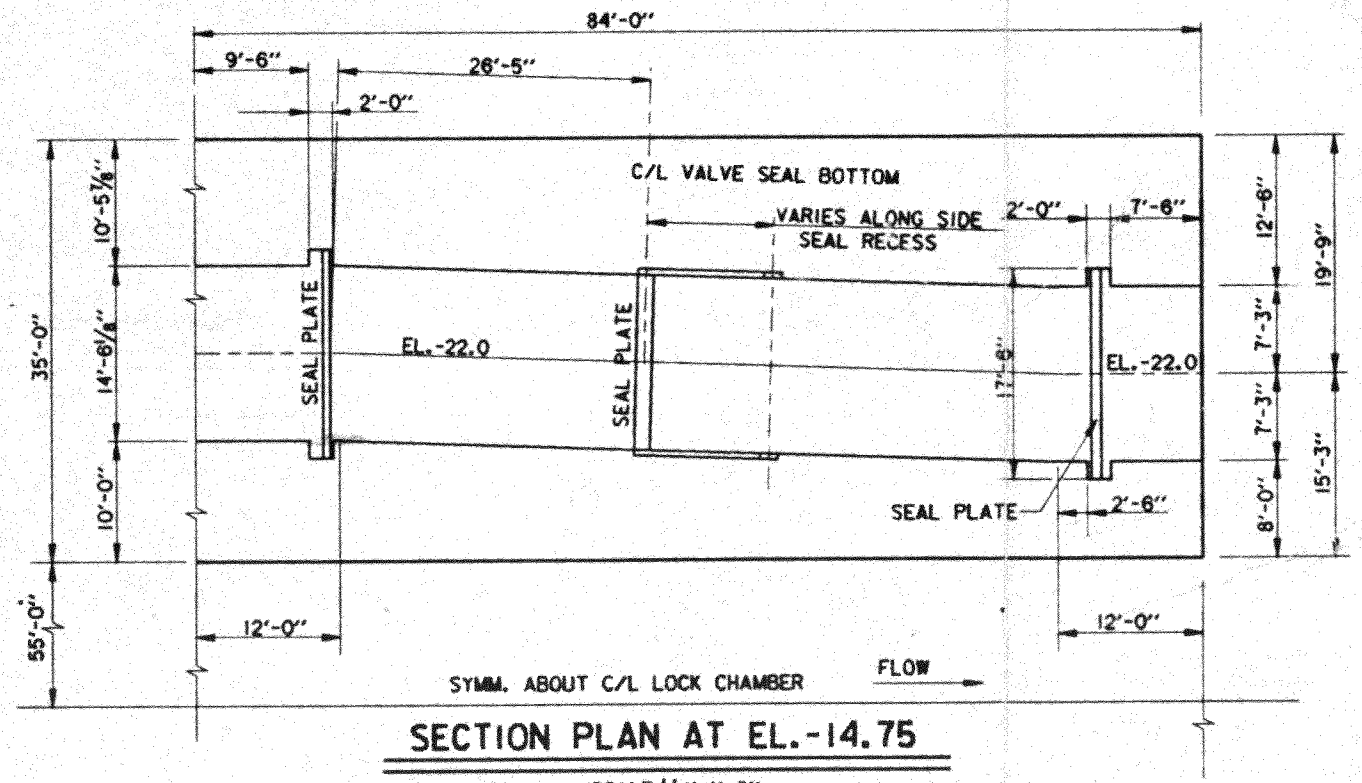

SECTION PLAN AT EL.-14.75

SCALE: 1/8" = 1'-0"

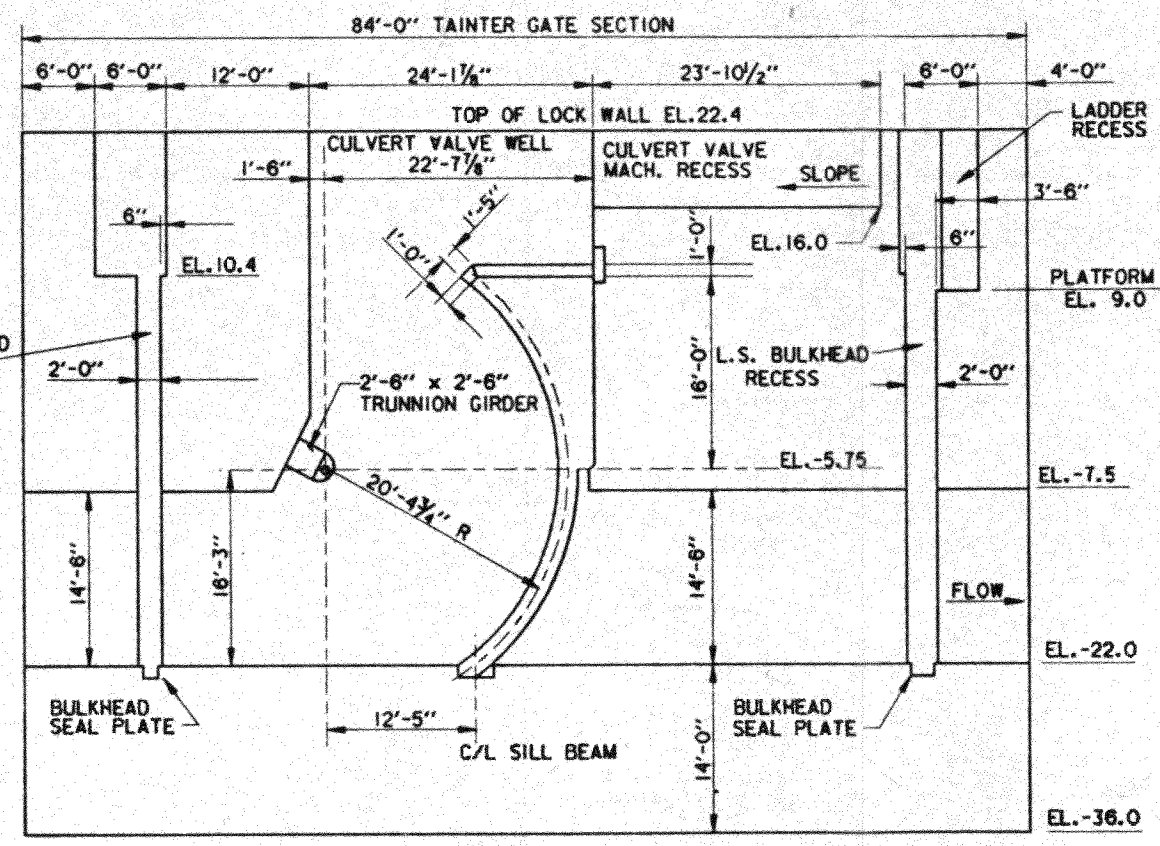

TAINTER VALVE WALL SECTION

SCALE: 1/8" = 1'-0"

SCALE: 1/8" = 1'- 0"

0 5' 10' 15' 20' 25'

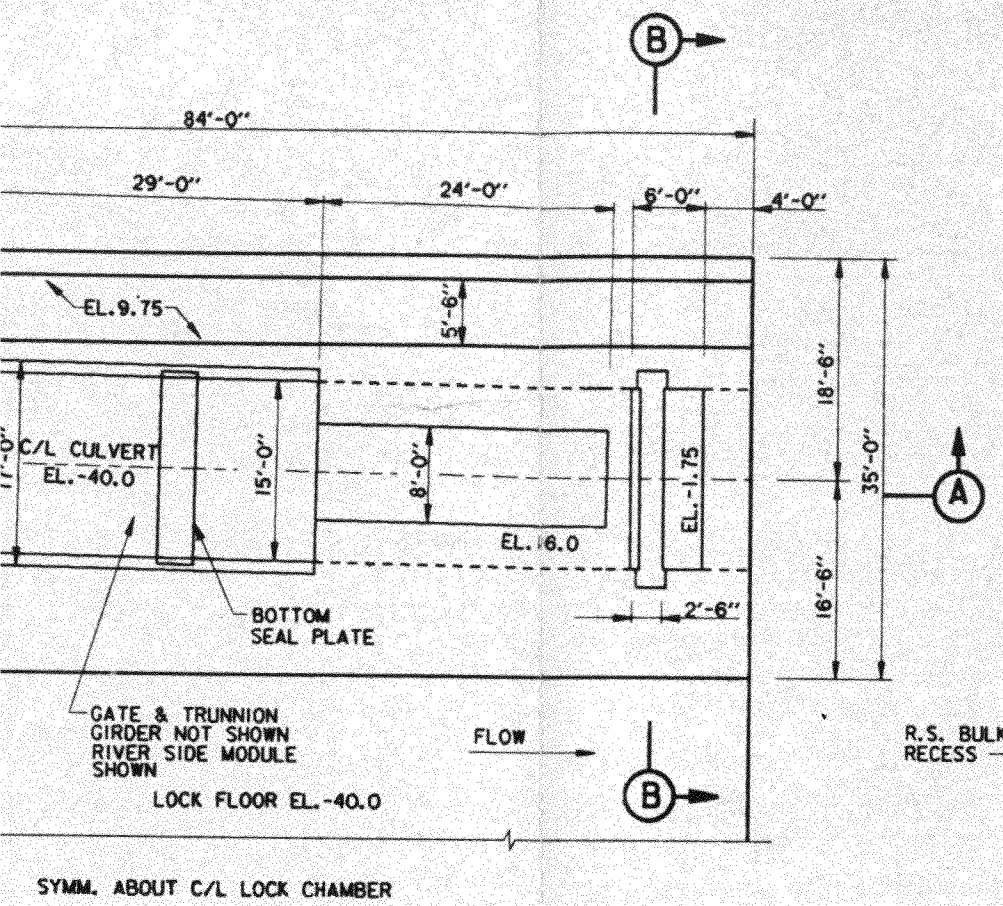

SECTION PLAN AT EL.18.0

SCALE: 1/8"=1'-0"

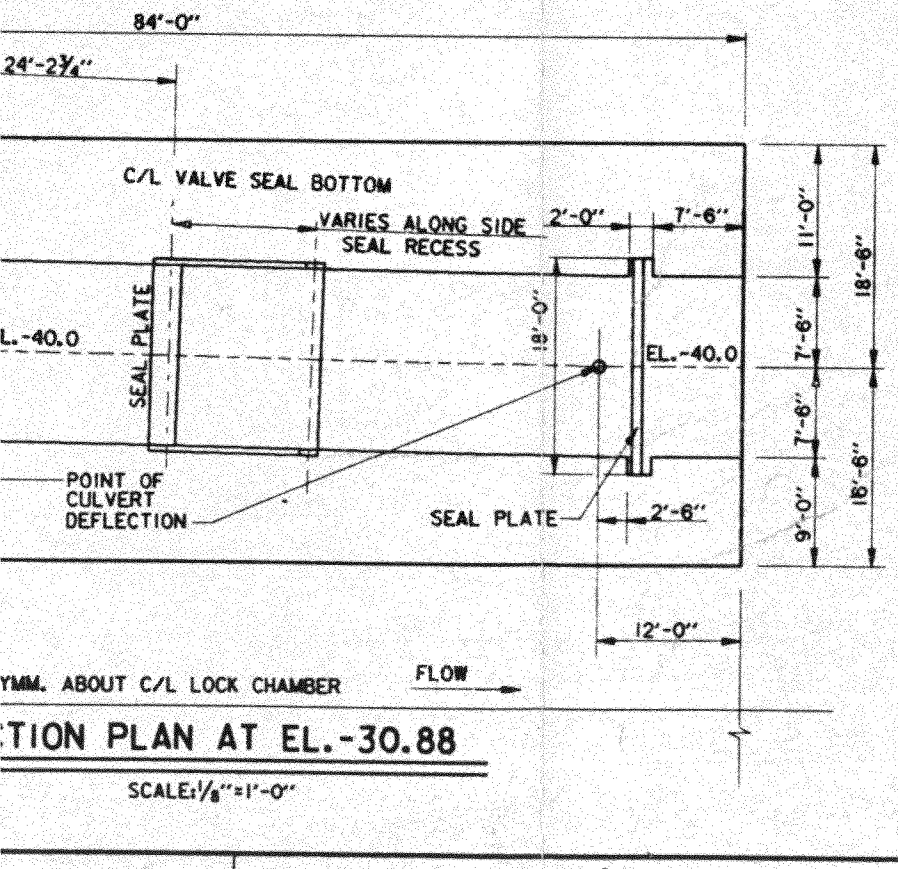

SECTION PLAN AT EL.-30.88

SCALE: 1/8"=1'-0"

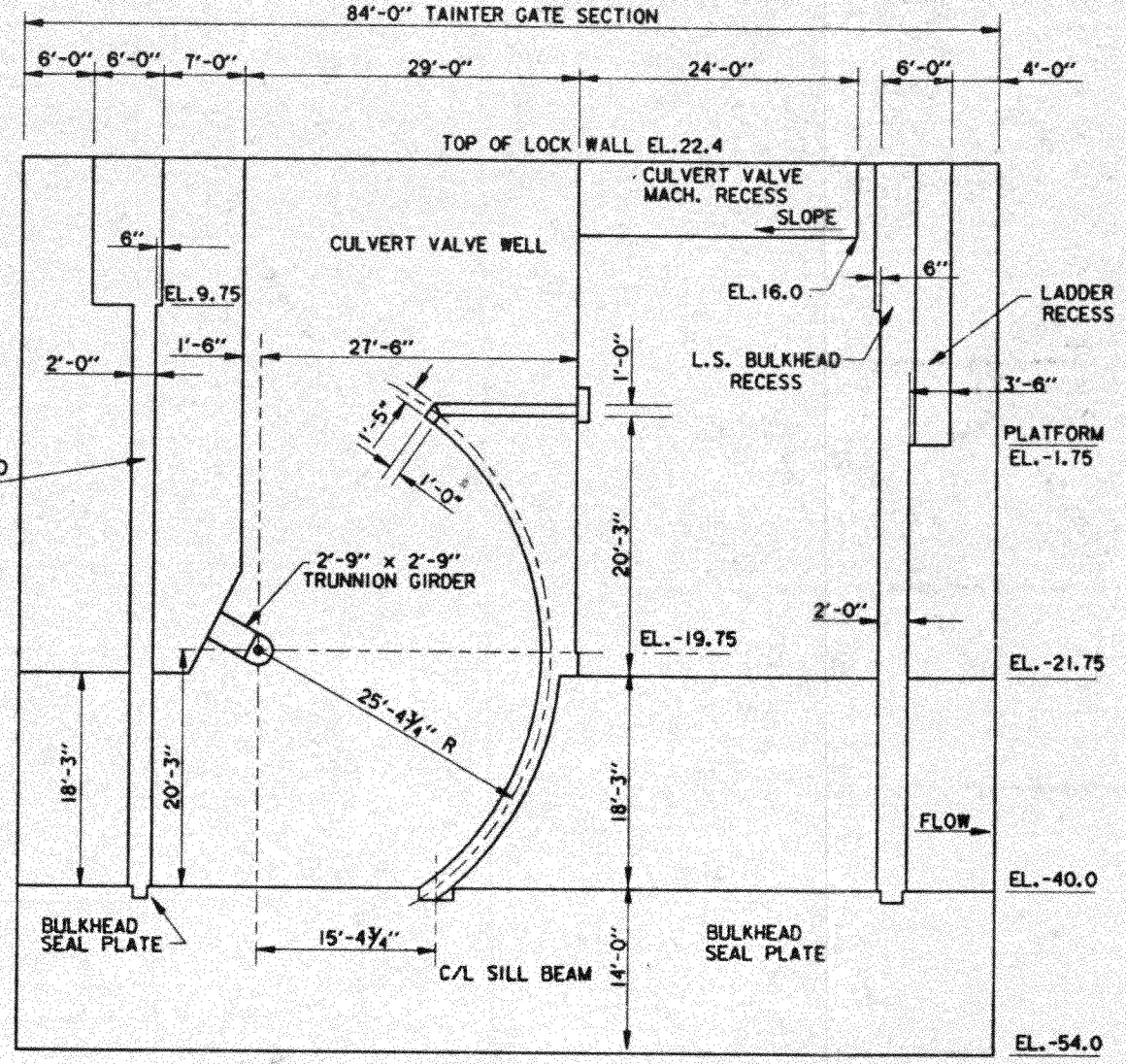

TAINTER VALVE WALL SECTION

SCALE: 1/8"=1'-0"

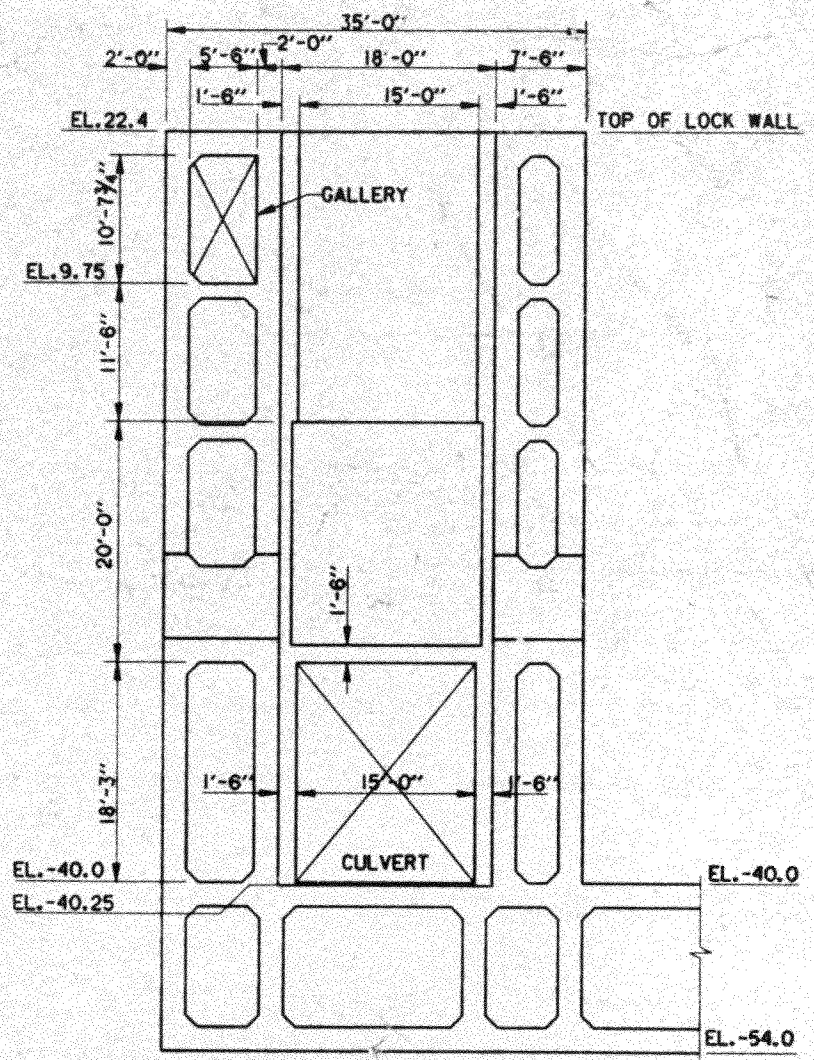

SECTION (B)

SCALE: 1/8"=1'-0"

MISSISSIPPI RIVER - GULF OUTLET
NEW LOCK AND CONNECTION CHANNELS
INDUSTRIAL CANAL LOCK REPLACEMENT
FEASIBILITY STUDY
NORTH OF CLAIBORNE AVENUE SITE

TAINTER VALVE LOCK SECTION 1200' SHIP LOCK

U.S. ARMY ENGINEER DISTRICT, NEW ORLEANS
CORPS OF ENGINEERS
NEW ORLEANS, LOUISIANA

DESIGNED BY: MHG	PLOT SCALE:	PLOT DATE:	CADD FILE: PLATE41T.DGN
DRAWN BY: COB	96	SEP 1996	FILE NO.
CHECKED BY: MHG	DATE: OCTOBER 1996		H-2-40392

PLATE-41T

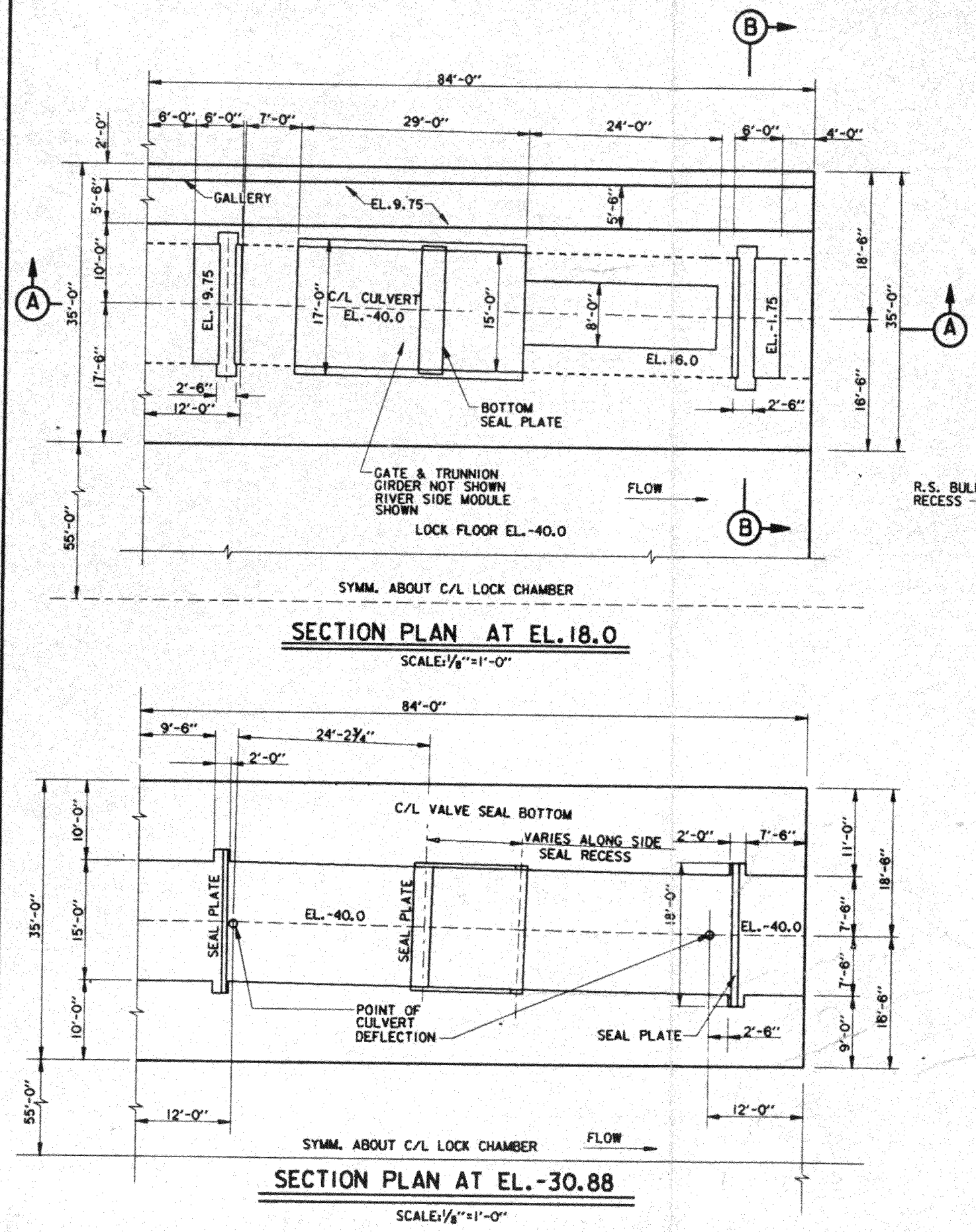

SECTION PLAN AT EL.18.0

SCALE: 1/8"=1'-0"

SECTION PLAN AT EL.-30.88

SCALE: 1/8"=1'-0"

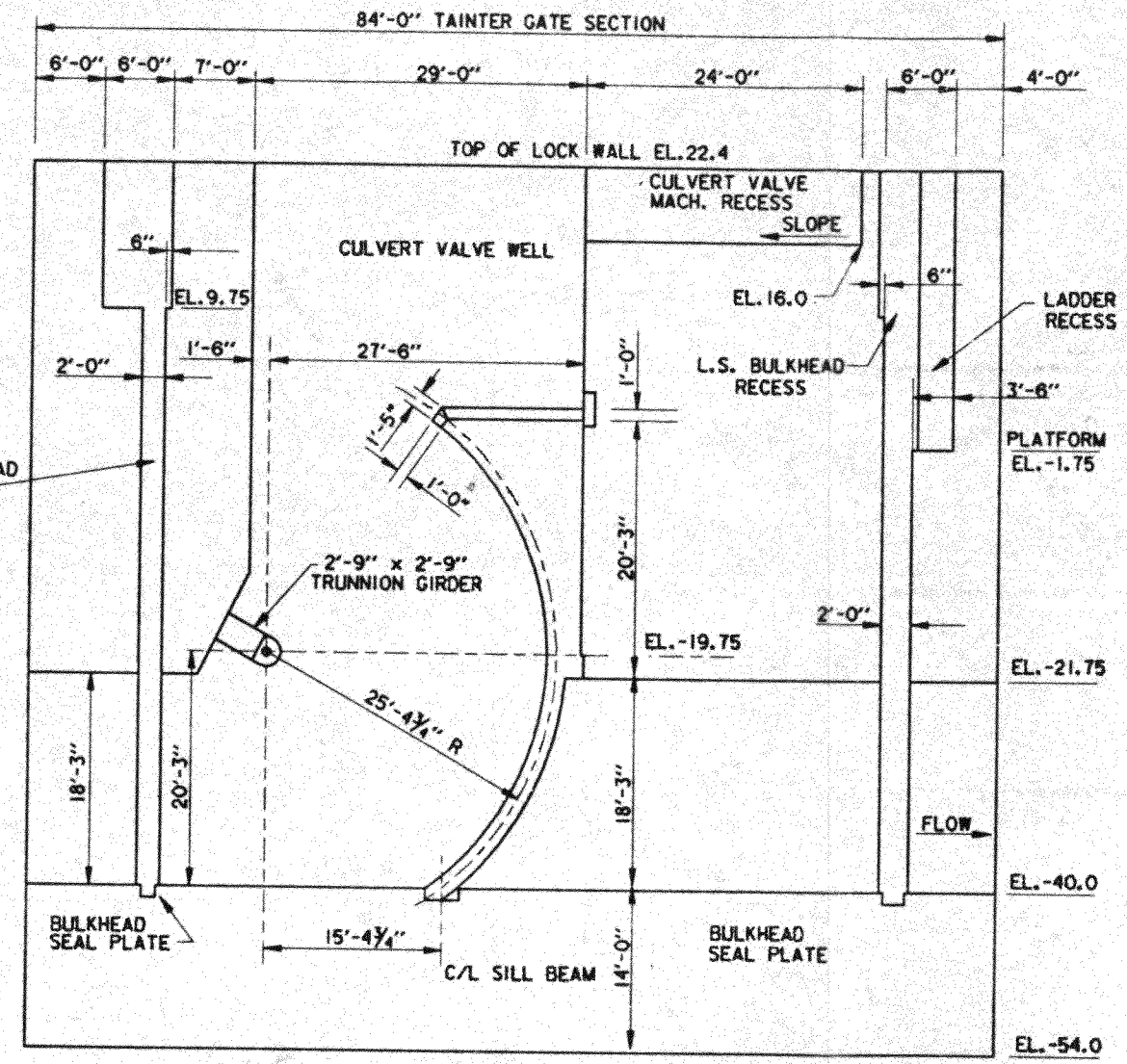

TAINTER VALVE WALL SECTION

SCALE: 1/8"=1'-0"

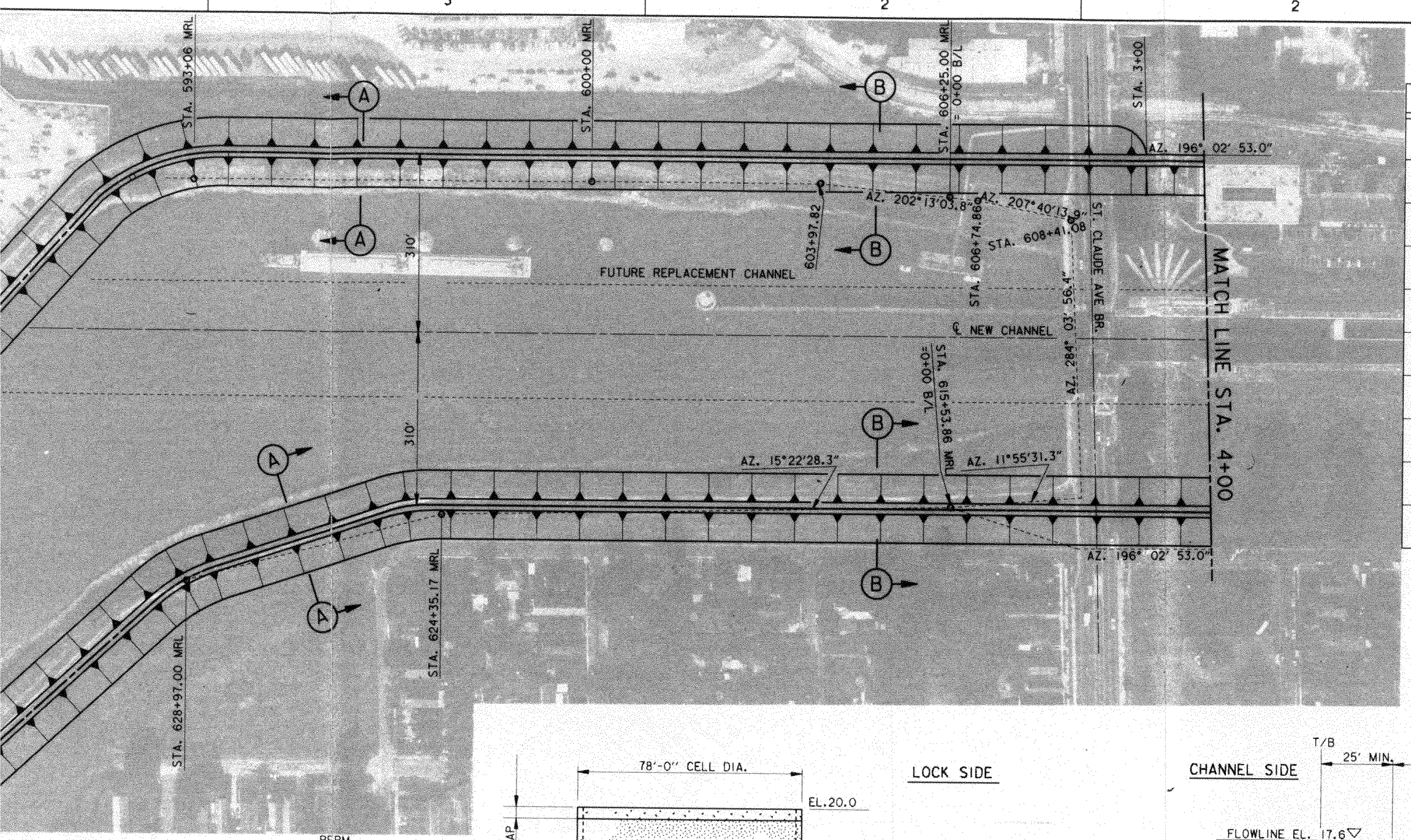

FLOOD PROTECTION			
EAST BANK REACH	SECTION LENGTH	WEST BANK REACH	SECTION LENGTH
628+97 MRL B/L To 624+35.17 MRL	(A) 461.8'	593+06 MRL B/L To 600+00 MRL B/L	(A) 694'
624+35.17 MRL B/L To 615+53.8 =0+00 LOCK B/L	(B) 882'	600+00 MRL B/L To To 606+25 MRL B/L= 0+00 LOCK B/L=	(B) 625'
0+00 TO 13+05.5	(B) 1305.5'	0+00 LOCK B/L To 3+00 LOCK B/L	(B) 300'
13+05.5 TO 24+00	(C) 1094.5'	3+00 LOCK B/L To 23+00	(D) 2000'
24+00 TO 39+50 (LOCK TIE-IN LEVEE)	(B) 1550'	23+00 LOCK B/L TO 39+50 (LOCK TIE-IN LEVEE)	(B) 1300'

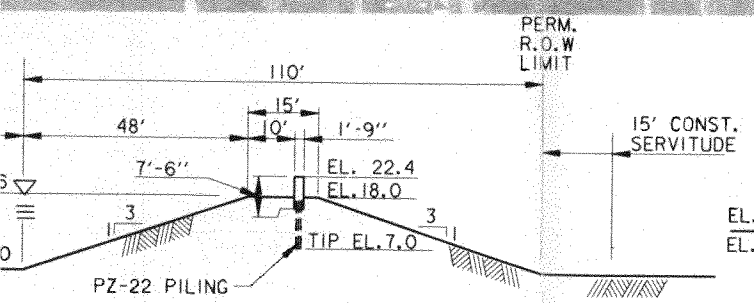

LEVEE/I-WALL SECTION (B) 43|42 (B)

FLOOD PROTECTION

SCALE: 1"=20'

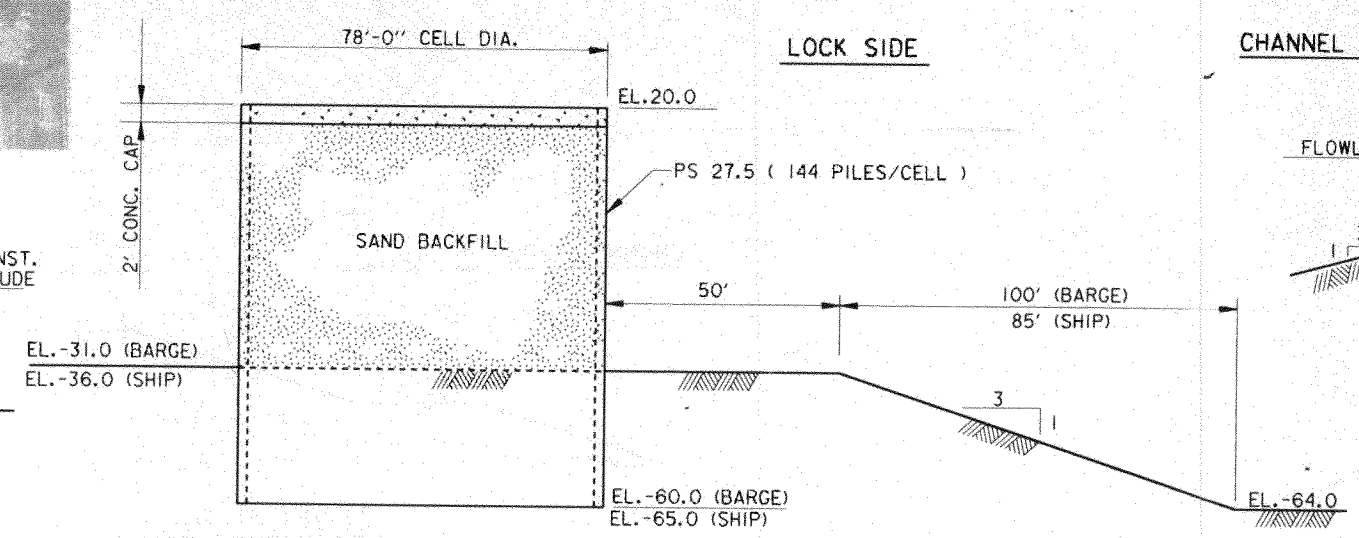

TEMPORARY PROTECTION CELLS

SECTION (A) 26|42 (A) 16|42

SCALE: 1"=20'

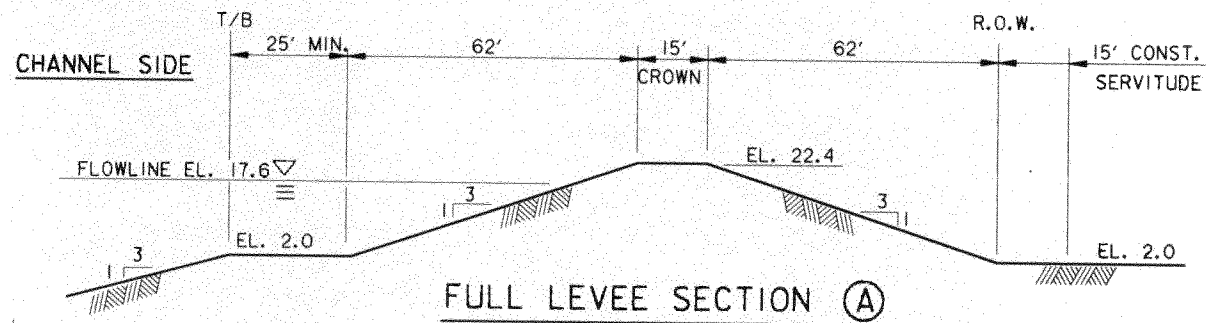

FULL LEVEE SECTION (A)

FLOOD PROTECTION

SCALE: 1"=20'

MISSISSIPPI RIVER - GULF OUTLET
NEW LOCK AND CONNECTING CHANNELS
(INDUSTRIAL CANAL LOCK REPLACEMENT)
FEASIBILITY STUDY
NORTH OF CLAIBORNE AVE. SITE

RIVERSIDE FLOOD PROTECTION
SHIP AND BARGE LOCK

U.S. ARMY ENGINEER DISTRICT, NEW ORLEANS
CORPS OF ENGINEERS
NEW ORLEANS, LOUISIANA

DESIGNED BY: MHG	PLOT SCALE: 1200	PLOT DATE: X	CADD FILE: fslevfwl.dgn	
DRAWN BY: HAT			FILE NO. H-2-40392	
CHECKED BY: ADS	DATE: NOVEMBER 1994			

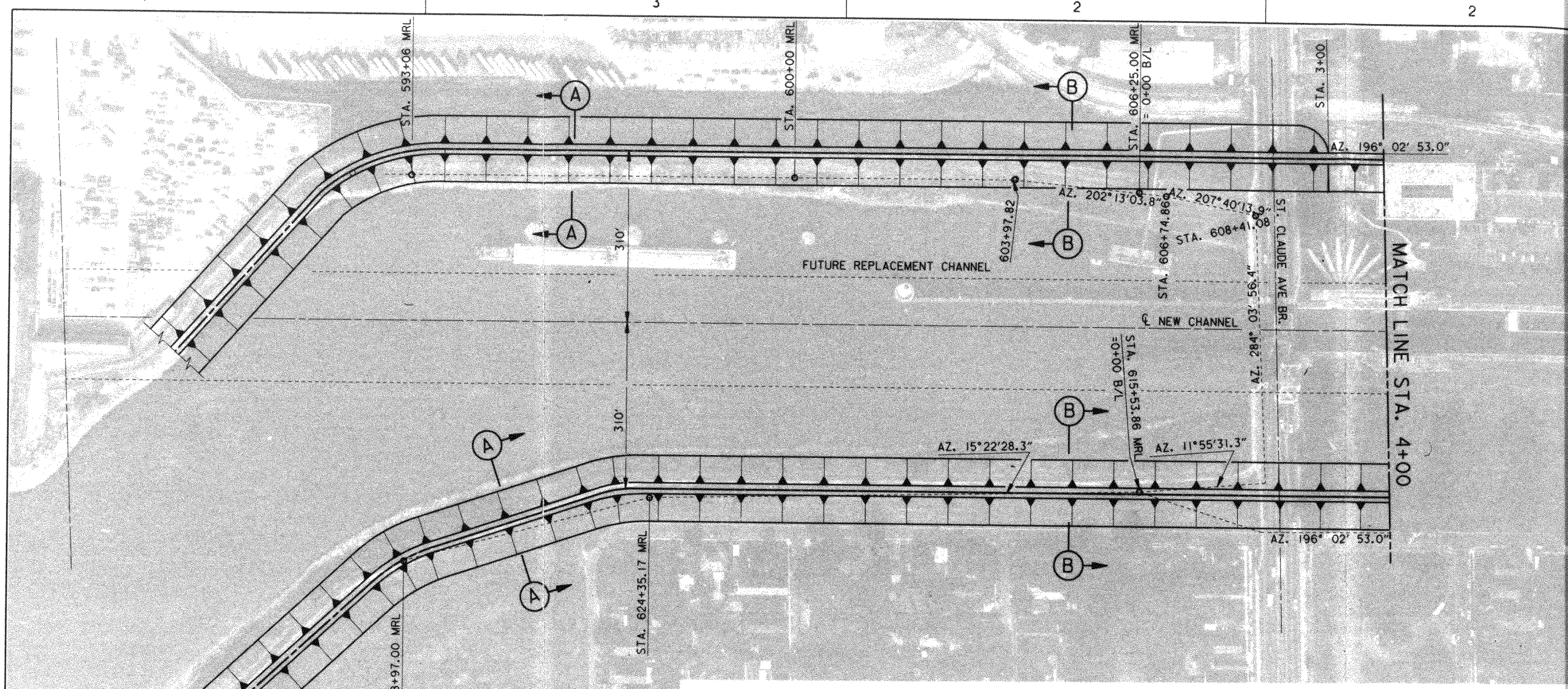

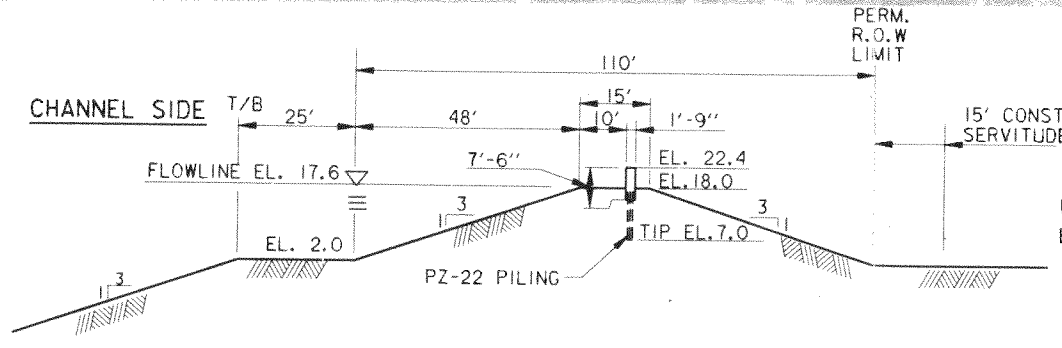

LEVEE/I-WALL SECTION B 43|42 (B)

FLOOD PROTECTION

SCALE: 1"=20'

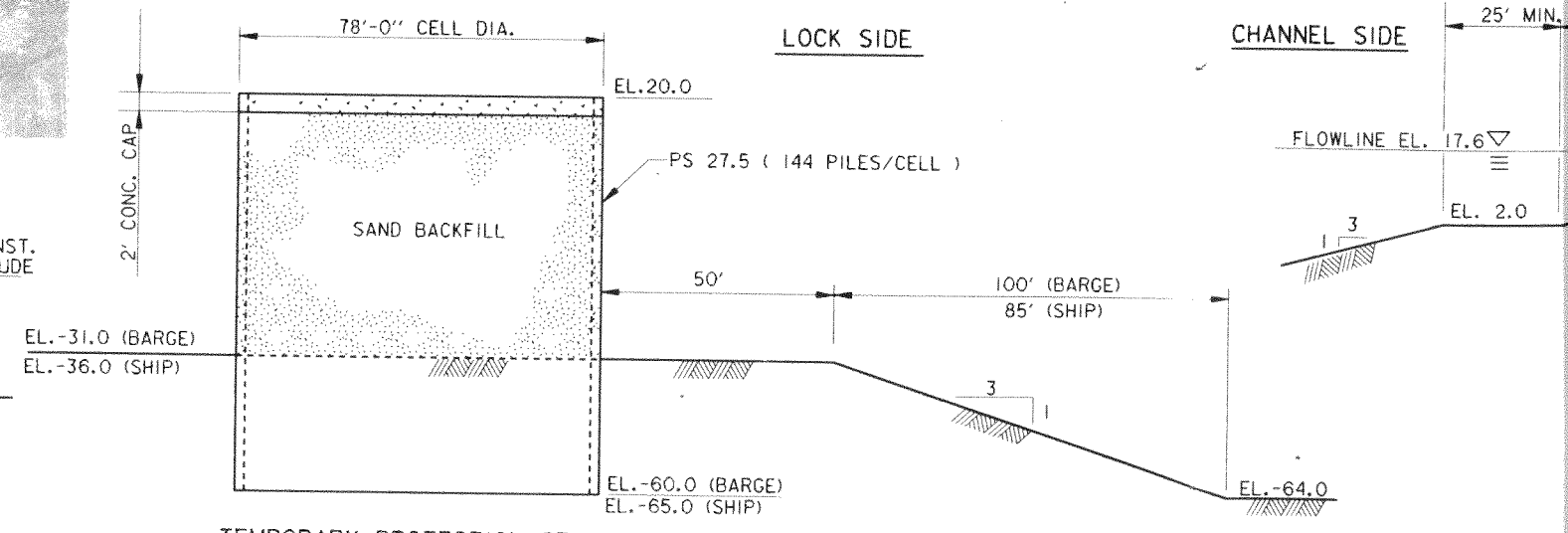

TEMPORARY PROTECTION CELLS

SECTION A 26|42 A 16|42

SCALE: 1"=20'

SCALE: 1" = 100'

100' 0 100' 200' 300' 400'

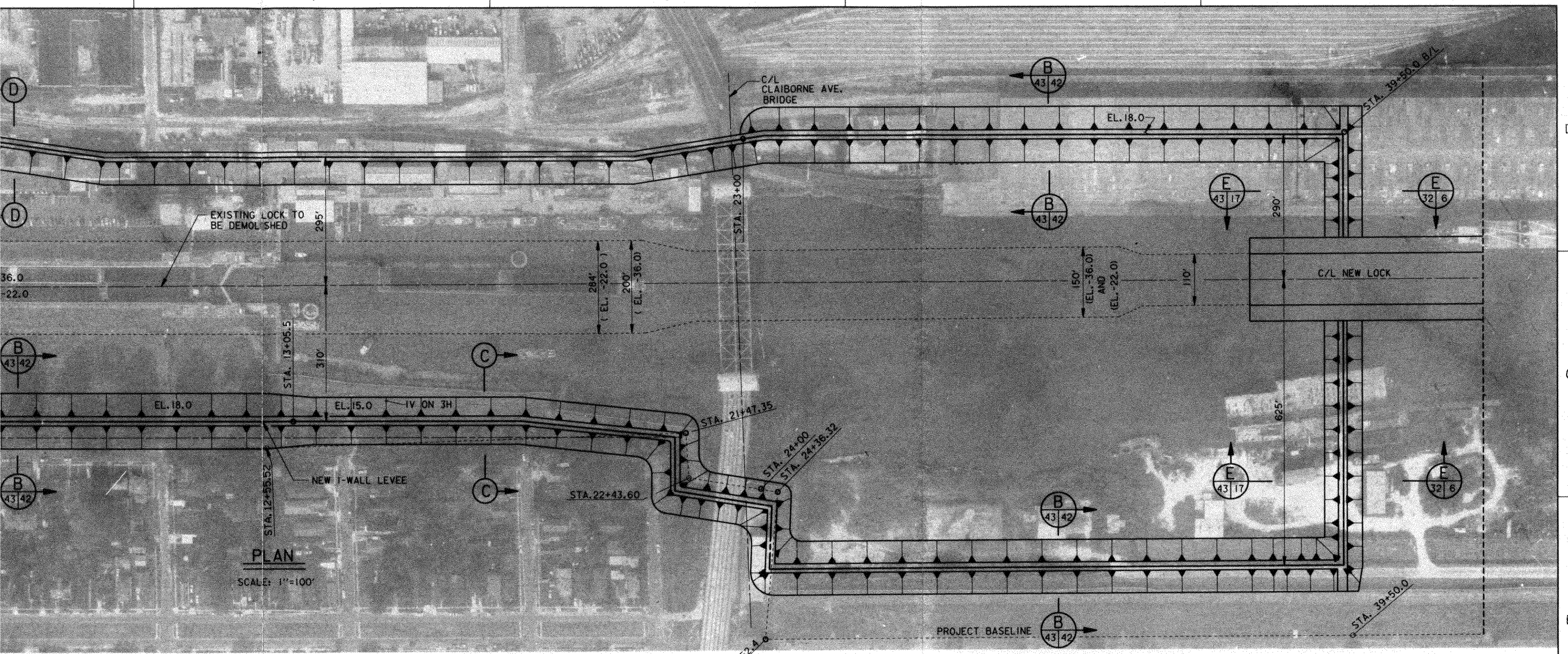

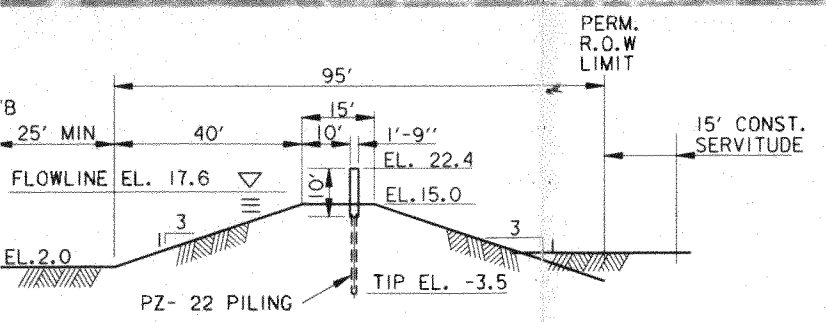

LEVEE/I-WALL SECTION (C)

FLOOD PROTECTION

SCALE: 1"=20'

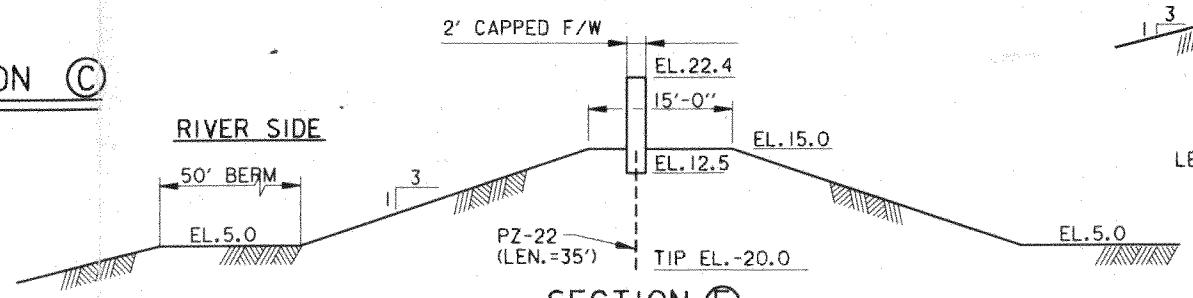

SECTION (E)

SCALE: 1"=10'

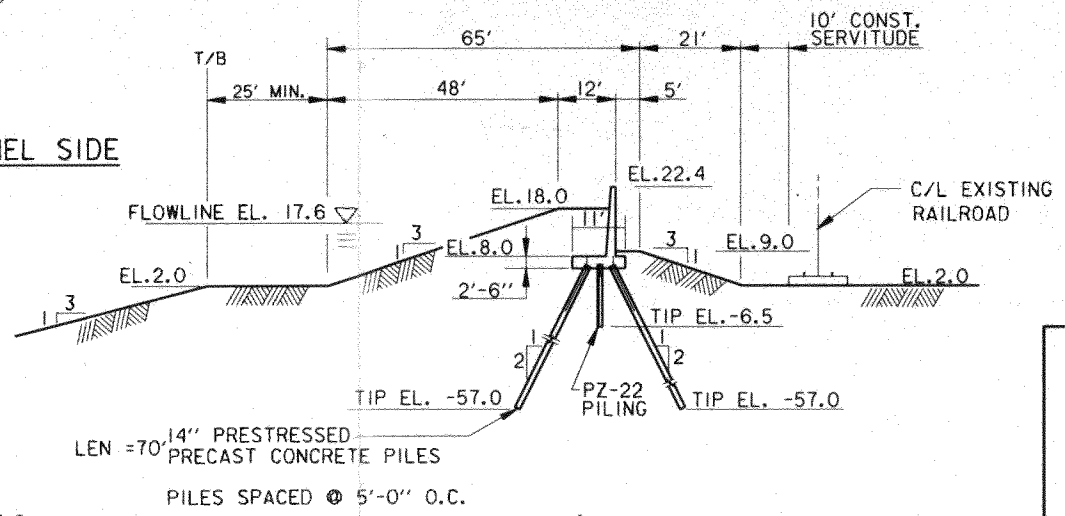

FLOOD PROTECTION SECTION (D)

T-WALL W/ BERM

SCALE: 1"=20'

MISSISSIPPI RIVER - GULF OUTLET
NEW LOCK AND CONNECTING CHANNELS
(INDUSTRIAL CANAL LOCK REPLACEMENT)
FEASIBILITY STUDY
NORTH OF CLAIBORNE AVE. SITE

RIVER SIDE FLOOD PROTECTION SHIP AND BARGE LOCK

U.S. ARMY ENGINEER DISTRICT, NEW ORLEANS
CORPS OF ENGINEERS
NEW ORLEANS, LOUISIANA

DESIGNED BY: MHG	PLOT SCALE: 1200	PLOT DATE: X	CADD FILE: FSLEV5FX.DGN
DRAWN BY: HAT			FILE NO. H-2-40392
CHECKED BY: ADS	DATE: NOVEMBER 1995		

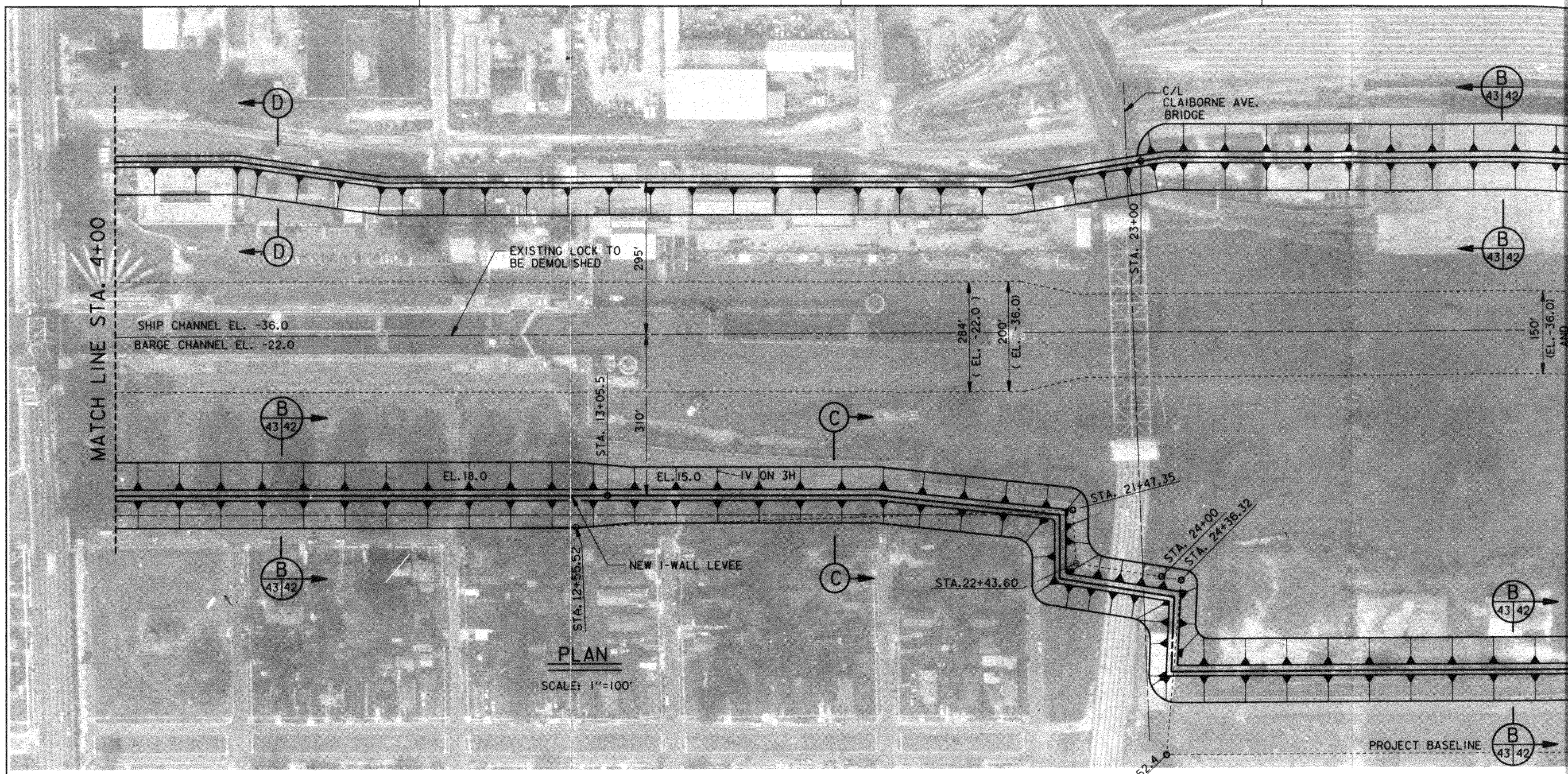

PLAN

SCALE: 1"=100'

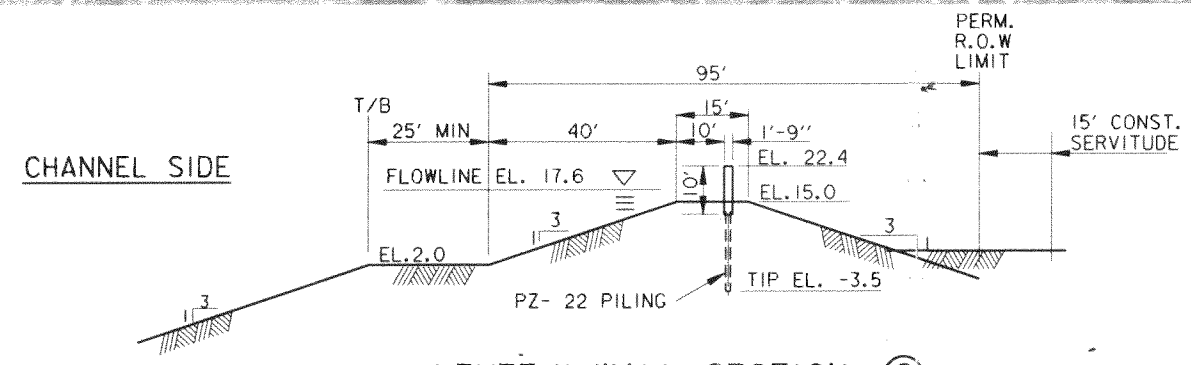

LEVEE/I-WALL SECTION (C)

FLOOD PROTECTION

SCALE: 1"=20'

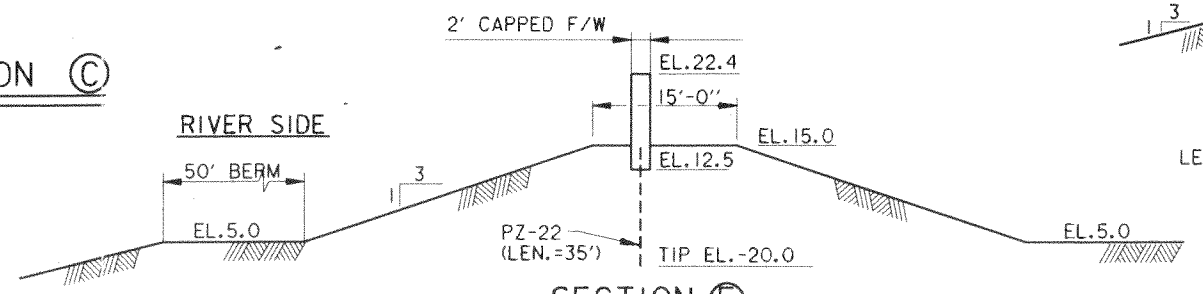

SECTION (E)

SCALE: 1"=10'

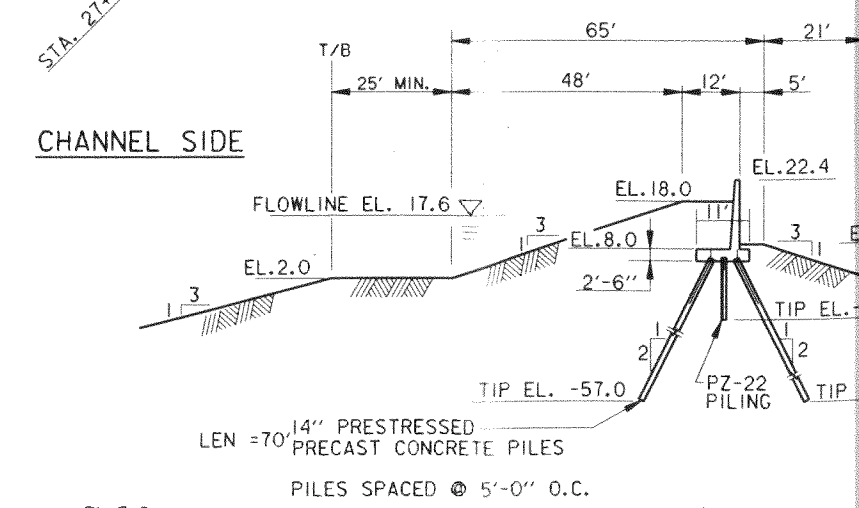

FLOOD PROTECTION SECTIO

T-WALL W/ BERM

SCALE: 1"=20'

SCALE: 1" = 100'

100' 0 100' 200' 300' 400'

4' CONC. CAP

2' REIN CONC. SLAB

PS 27.5
ASTM A690

MILAR

IMITS

12"X12" TIMBER
@ 7'-6" O.C.

RUBBER FENDER

W10X49 TRIPOD
FRAME @ 15'-0" O.C.

11'-0"

6'-0"

6"

3'-0"

6"

1'-6"

6"

12"

9'-0"

5-12"X12"
TIMBERS EQ.SP.

25'-0"

CONCRETE PONTOON SECTION

SCALE: 3/8"=1'-0"

75' DIA. STEEL SHEET
PILE DOLPHIN
144 PS.-27.5 SHEET
PILES, LENGTH =110'

D

F 44 46

EL.22.4

2'-6"

EL.22.4

100'

62'-6"

D

F 44 46

EL.-36.0

EL.-40.0

60'

EL.-40.0

NEW LOCK
1760'

RIVERSIDE

B

1200' FLOATING GUIDEWALL

IV ON 10H

100' RIPRAP

A

CONCRETE PONTOONS

25'-0"

SUPPORT FRAME

25'-0"

SUPPORT FRAME

25'-0"

SUPPORT FRAME

25'-0"

SUPPORT FRAME

2'-3"

B

200'-0" 200'-0" 200'-0" 200'-0" 200'-0" 200'-0"

CLAIBORNE AVE. BRIDGE
EAST BANK REPLACEMENT PIER

LOCK GUIDEWALL - PLAN

SCALE 1"=30'

75' DIA. STEEL SHEET
PILE DOLPHIN
144 PS.-27.5 SHEET
PILES, LENGTH =100'

E 44 46

2'-6"

6' TYP.

EL.15.0

EL.15.0

62'-6"

100'

110'

EL.-40.0

F 44 46

IV ON 10 H

EL.-40.0

EL.-36.0

E 44 46

EL.-40.0

800' TIMBER GUIDEWALL

TIMBER SUPPORTS @ 6'-0"

LAKESIDE

C

75'

E 44 46

2'-6"

EL.15.0

44 46 E

75' DIA. STEEL SHEET
PILE DOLPHIN
144 PS. 27.5 SHEET
PILES, LENGTH =100'

C

NOTE: BRIDGE PIER NOT SHOWN.

EL.22.4

GUIDE BEAM

EL.-10.0

PIER 1

EL.-36.0

EL.-42.0

EL.-36.0

LIMIT OF RIPRAP

EL.22.4

CONCRETE

EL.-10.0

PIER 2

EL.-32.5

EL.-42.0

EL.22.4

GUIDE BEAM

EL.-10.0

PIER 1

EL.-36.0

EL.-42.0

EL.22.4

CONCRETE

EL.-10.0

PIER 2

EL.-32.5

EL.-42.0

EL.22.4

CONCRETE

EL.-10.0

PIER 2

EL.-32.5

EL.-42.0

EL.22.4

PONTOONS

EL.-10.0

EL.-36.0

END PIER
SECTION SHOWN
ON PLATE 46

SECTION (A)

SCALE: 1"=30'

TIMBER FENDERS

TRAVERSE ANCHORAGE

EL.22.4

MAX. WATER SURFACE EL.17.6

TOP OF DECK

M.L.W. EL.5.0

SEE PONTOON SECTION

INTERMEDIATE PIER
SEE PLATE 35

PIER 6'-0" WIDE

84'7" TO C/L LOCK

EL.-36.0

EL.-42.0

SECTION (B)

SCALE: 1"=30'

MISSISSIPPI RIVER - GULF OUTLET
NEW LOCK AND CONNECTION CHANNELS
(INDUSTRIAL CANAL LOCK REPLACEMEN)
FEASIBILITY STUDY
NORTH OF CLAIBORNE AVE. SITE

LOCK GUIDEWALLS
1200' SHIP LOCK

U.S. ARMY ENGINEER DISTRICT, NEW ORLEANS
CORPS OF ENGINEERS
NEW ORLEANS, LOUISIANA

DESIGNED BY:	MHG	PLOT SCALE: 360	PLOT DATE: X	CADD FILE: T#SFSGUI.DGN
DRAWN BY:	HAT	DATE: NOVEMBER 1994		FILE NO. H-2-40392
CHECKED BY:	ADS			

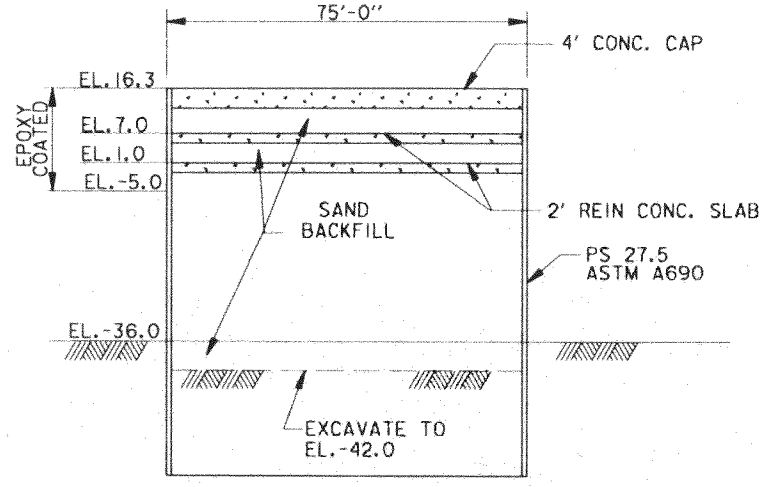

SECTION (C)

SECTION (D) SIMILAR

SCALE: 1"=20

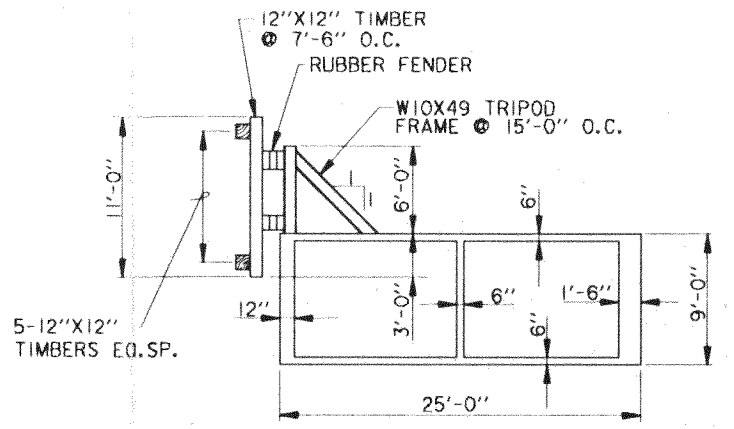

CONCRETE PONTOON SECTION

SCALE: 3/8"=1'-0"

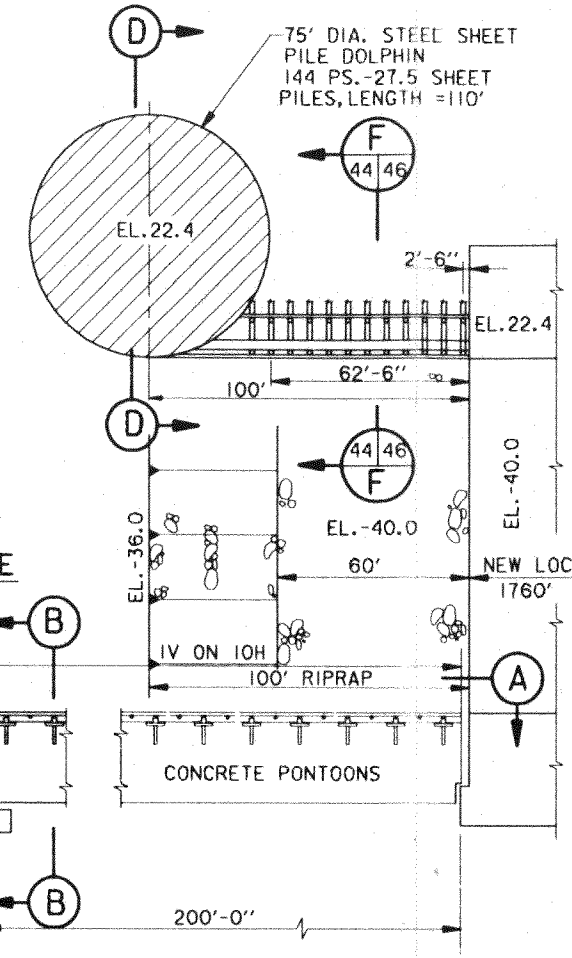

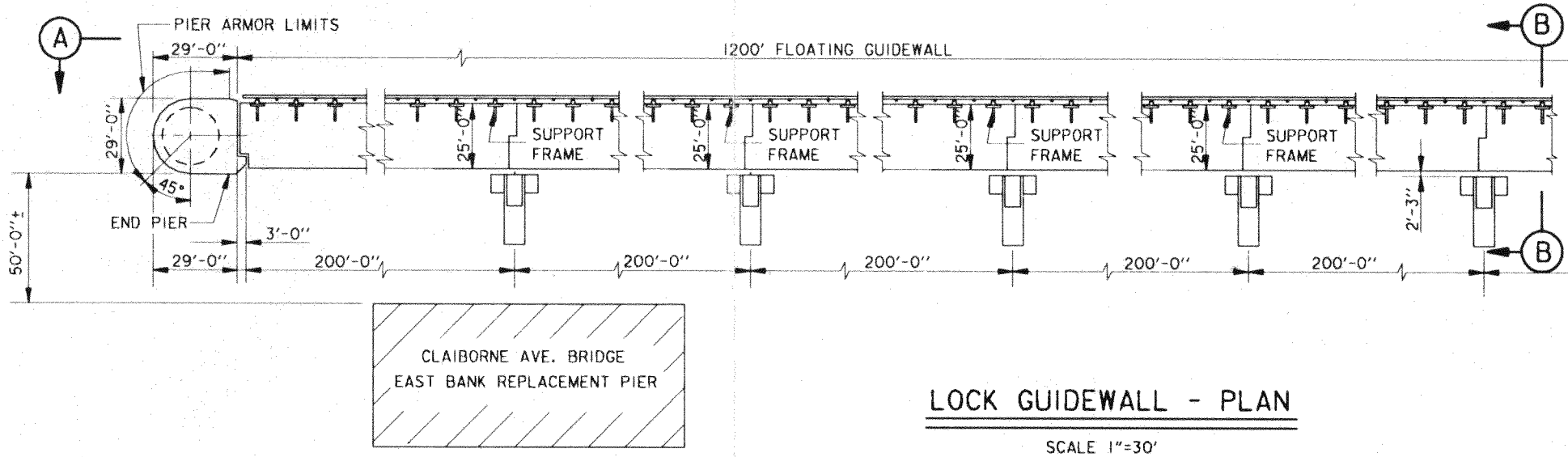

LOCK GUIDEWALL - PLAN

SCALE 1"=30'

NOTE: BRIDGE PIER NOT SHOWN.

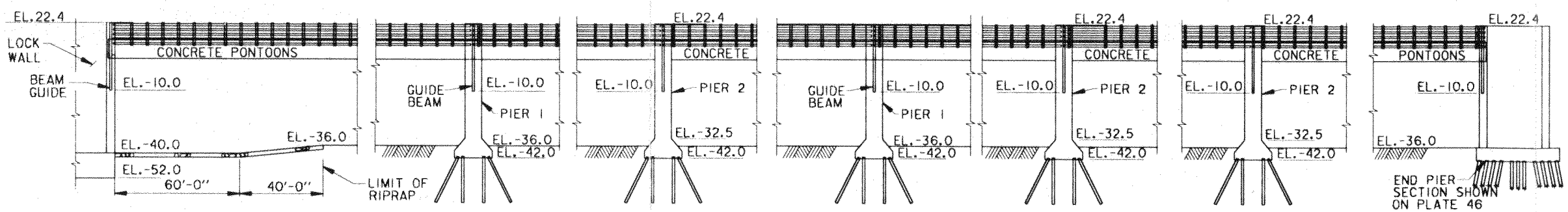

SECTION (A)

SCALE: 1"=30'

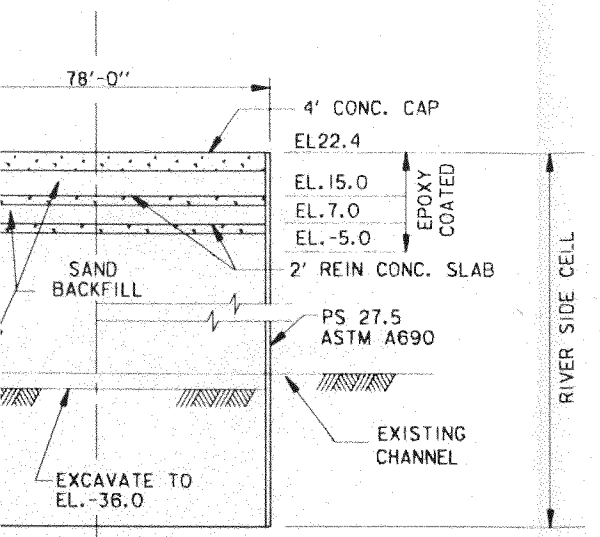

SECTION (C) LAKE SIDE

SECTION (D) SIMILAR

RIVER SIDE

SCALE: 1"=20'

NOTE:
DESIGN CHANNEL BOTTOM IS AT ELEV. -22.0, EXISTING CHANNEL IS AT ELEV. -31.0±

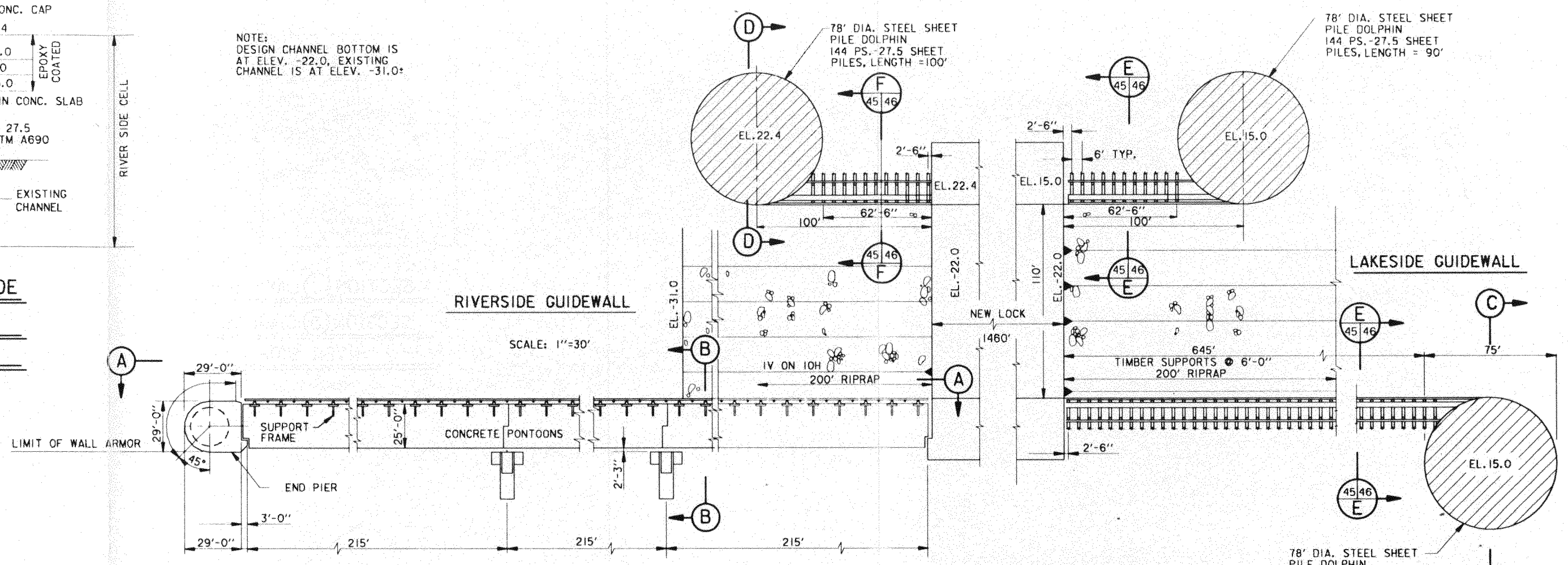

LOCK GUIDEWALL - PLAN

SCALE: 1"=30'-0"

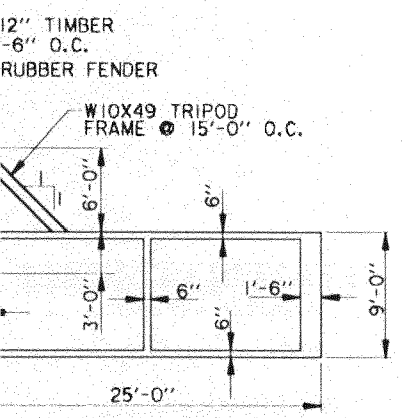

ETE PONTOON SECTION

SCALE: 3/8"=1'-0"

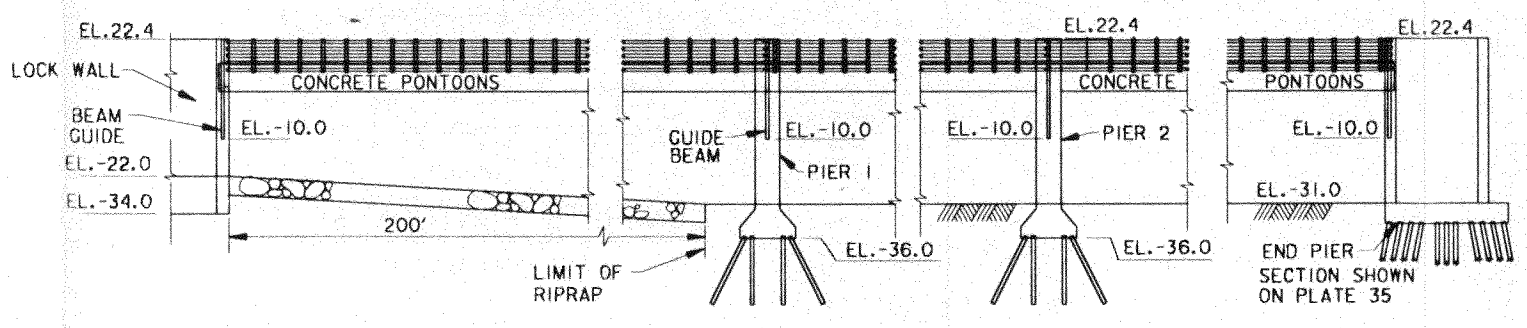

SECTION (A)

SCALE: 1"=30'

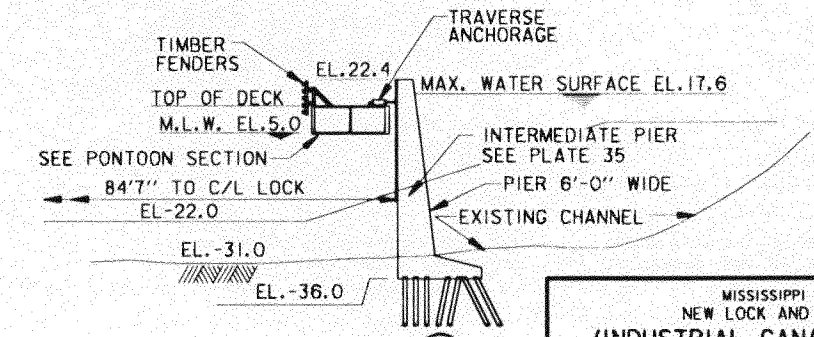

SECTION (B)

SCALE: 1"=30'

MISSISSIPPI RIVER - GULF OUTLET
NEW LOCK AND CONNECTION CHANNELS
(INDUSTRIAL CANAL LOCK REPLACEMENT)
FEASIBILITY STUDY
NORTH OF CLAIBORNE AVE. SITE

LOCK GUIDEWALLS 900' BARGE LOCK

U.S. ARMY ENGINEER DISTRICT, NEW ORLEANS
CORPS OF ENGINEERS
NEW ORLEANS, LOUISIANA

DESIGNED BY: MHG	PLOT SCALE: 360	PLOT DATE: X	CADD FILE: BFSGUIDE DGN
DRAWN BY: HAT			FILE NO. H-2-40392
CHECKED BY: ADS	DATE: NOVEMBER 1994		

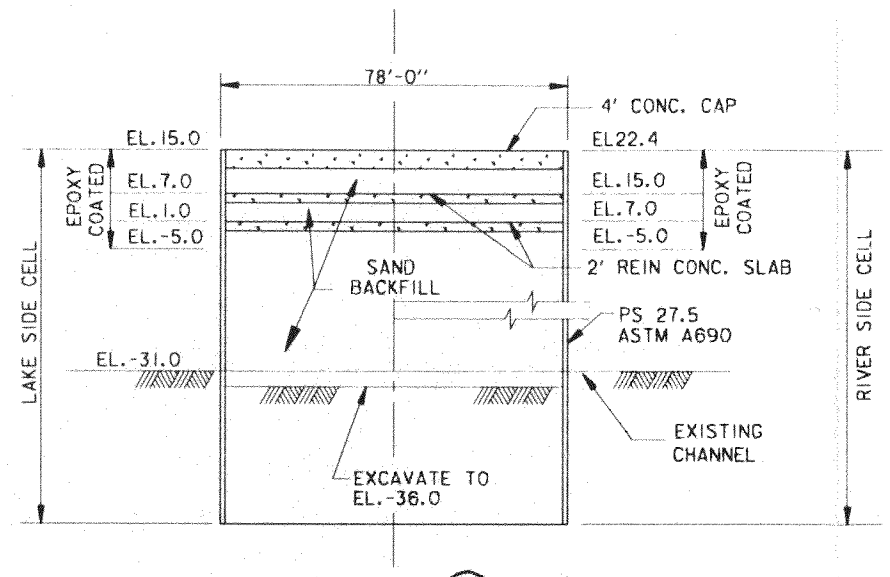

SECTION (C) LAKE SIDE
SECTION (D) SIMILAR
RIVER SIDE

SCALE: 1"=20'

NOTE:
DESIGN CHANNEL BOTTOM IS AT ELEV. -22.0, EXISTING CHANNEL IS AT ELEV. -31.0±

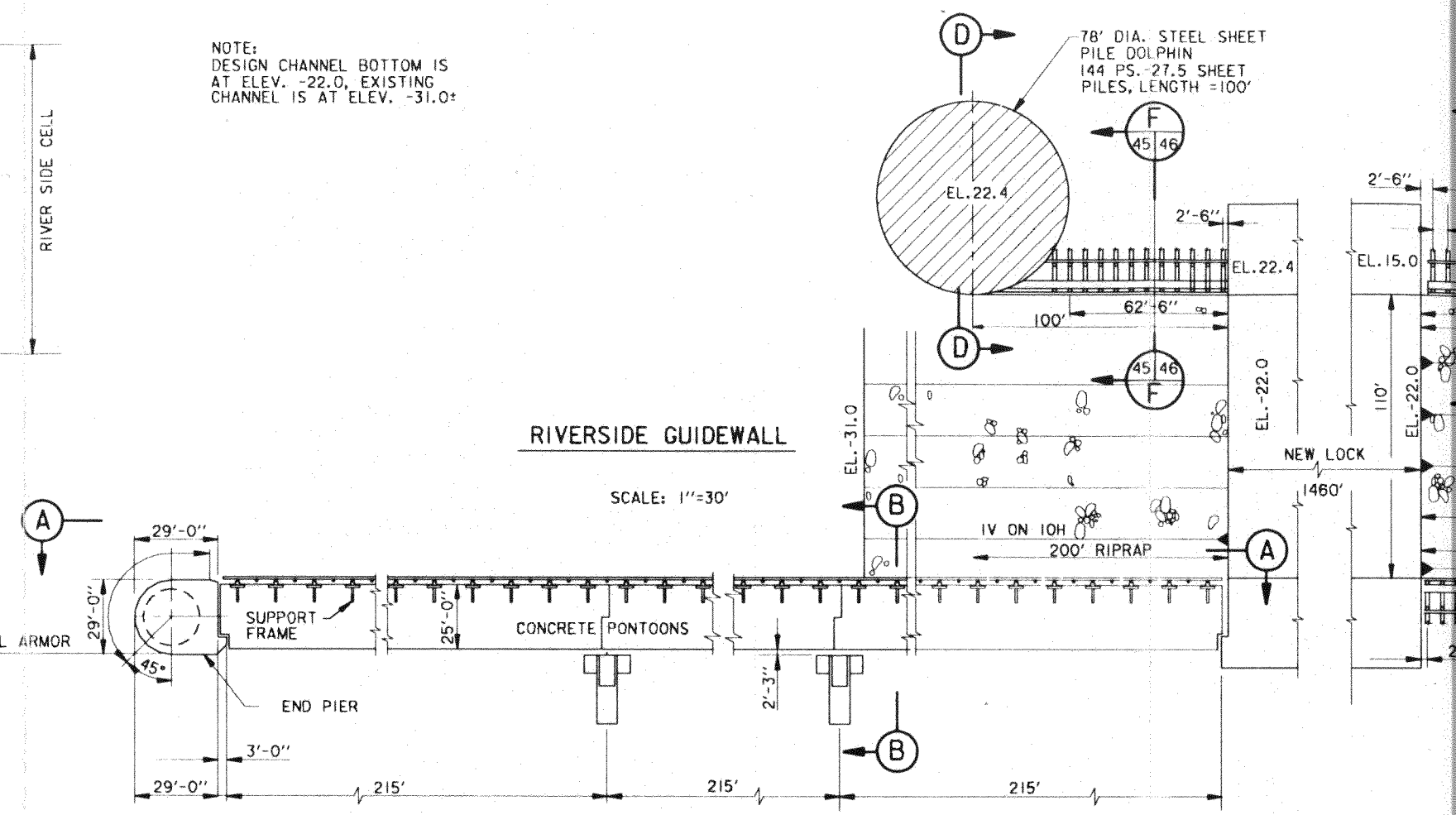

RIVERSIDE GUIDEWALL

SCALE: 1"=30'

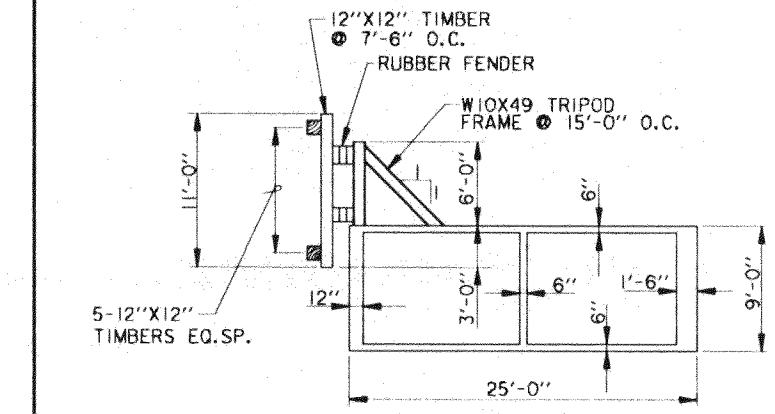

CONCRETE PONTOON SECTION

SCALE: 3/8"=1'-0"

LOCK GUIDEWALL - PLA

SCALE: 1"=30'-0"

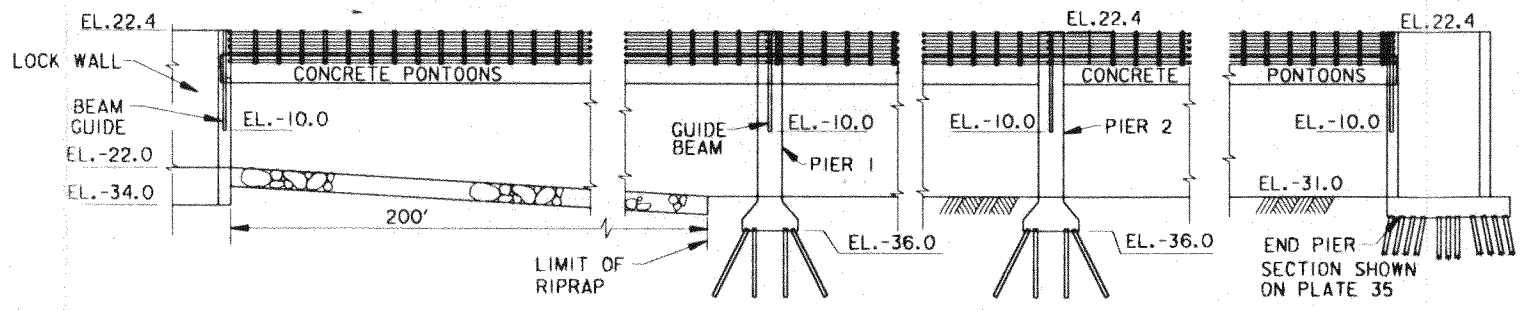

SECTION (A)

SCALE: 1"=30'

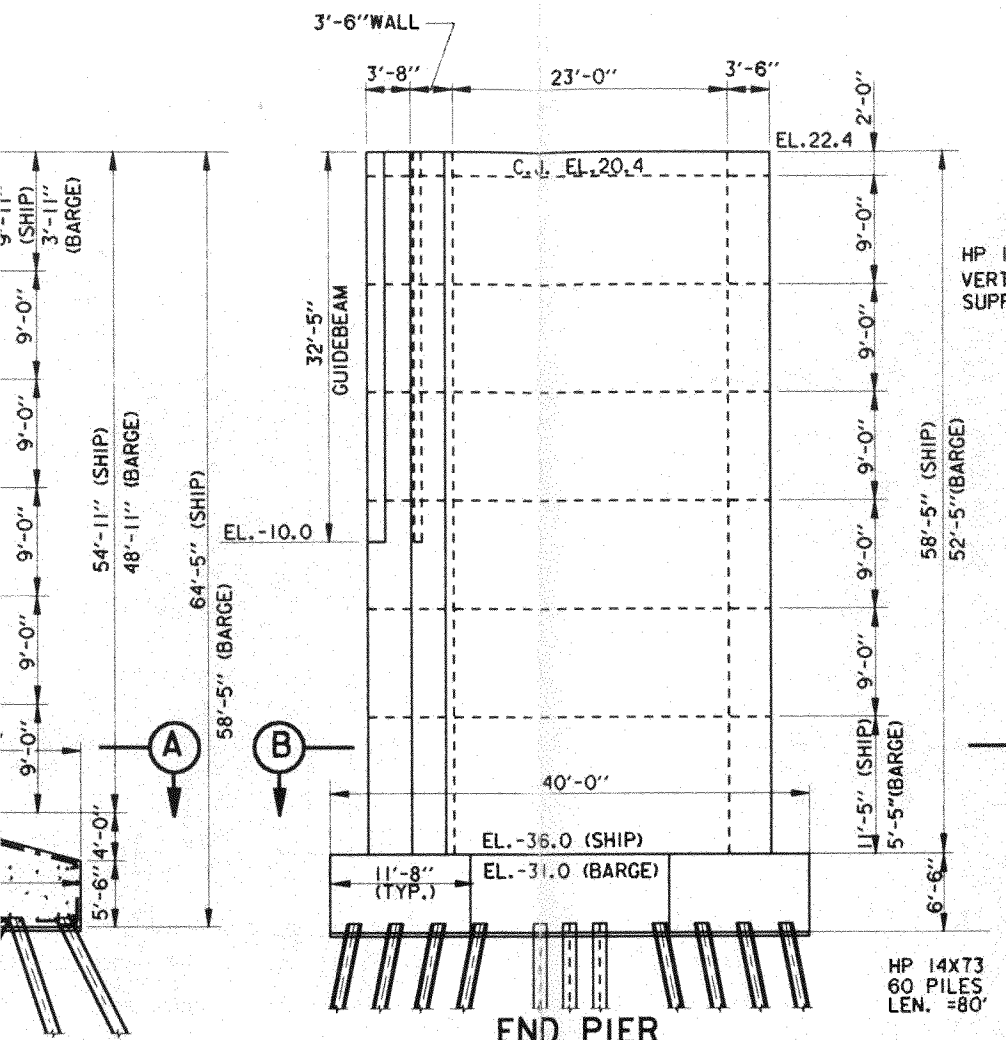

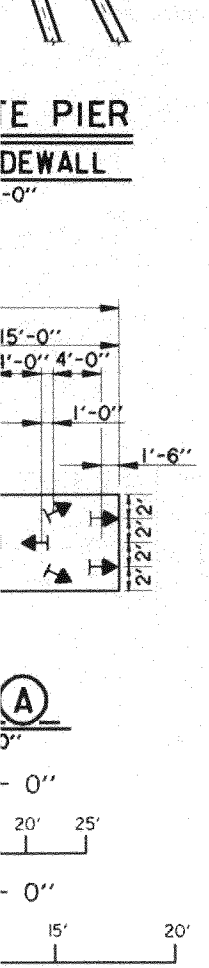

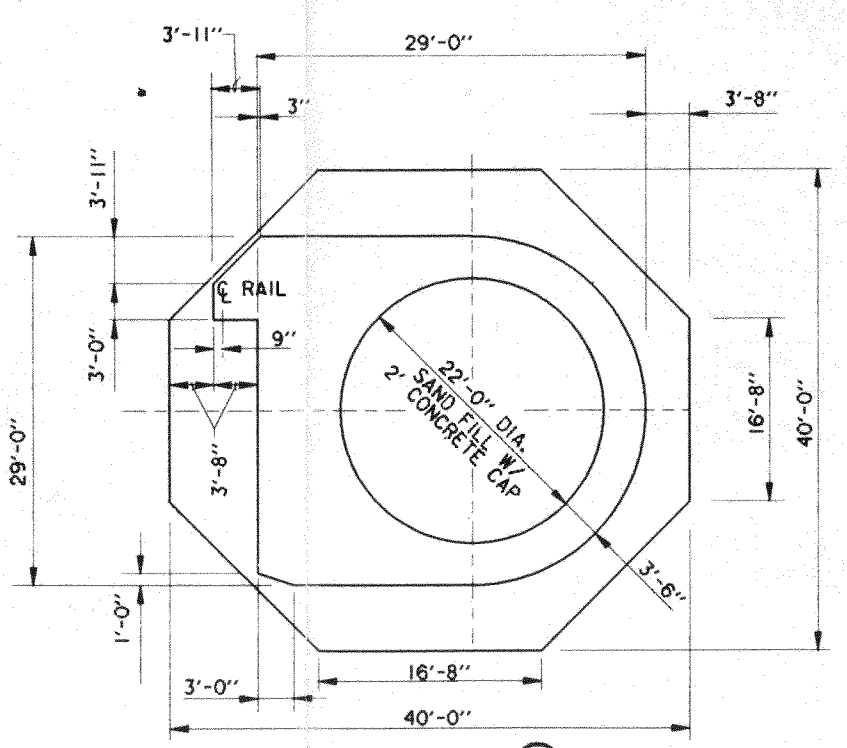

SECTION (B)
SCALE:1/8"=1'-0"

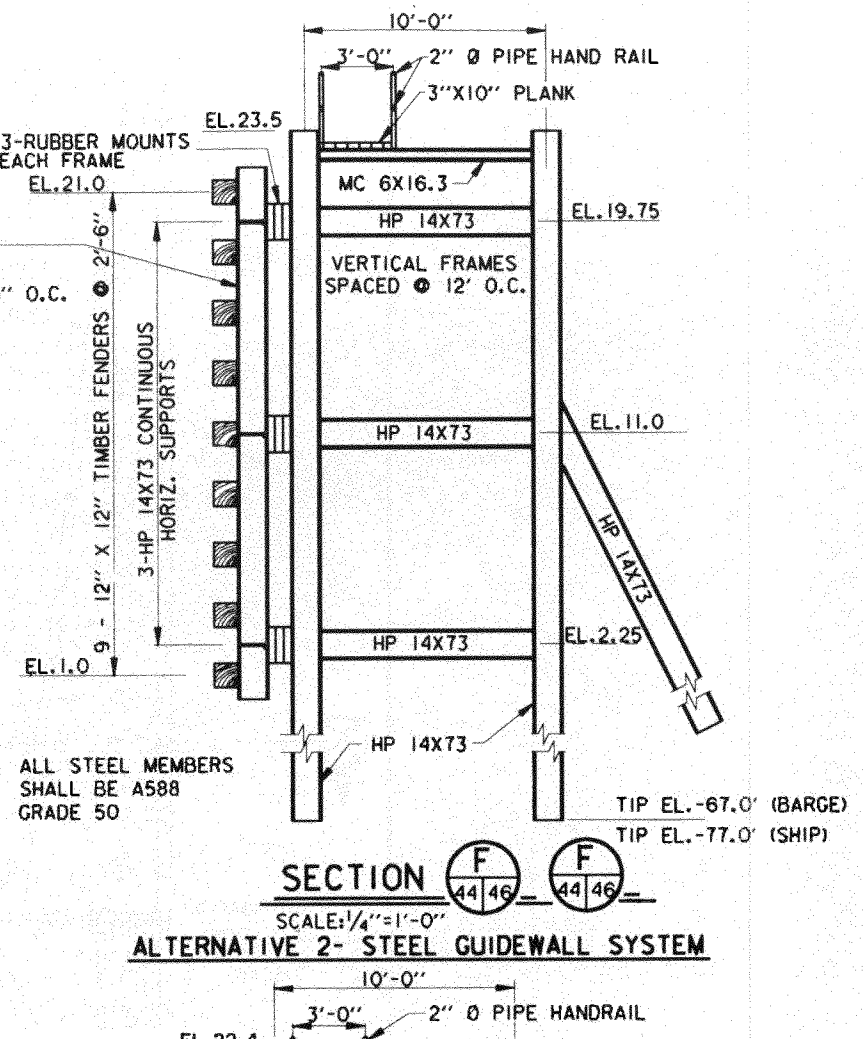

SECTION
SCALE:1/4"=1'-0"

ALTERNATIVE 2- STEEL GUIDEWALL SYSTEM

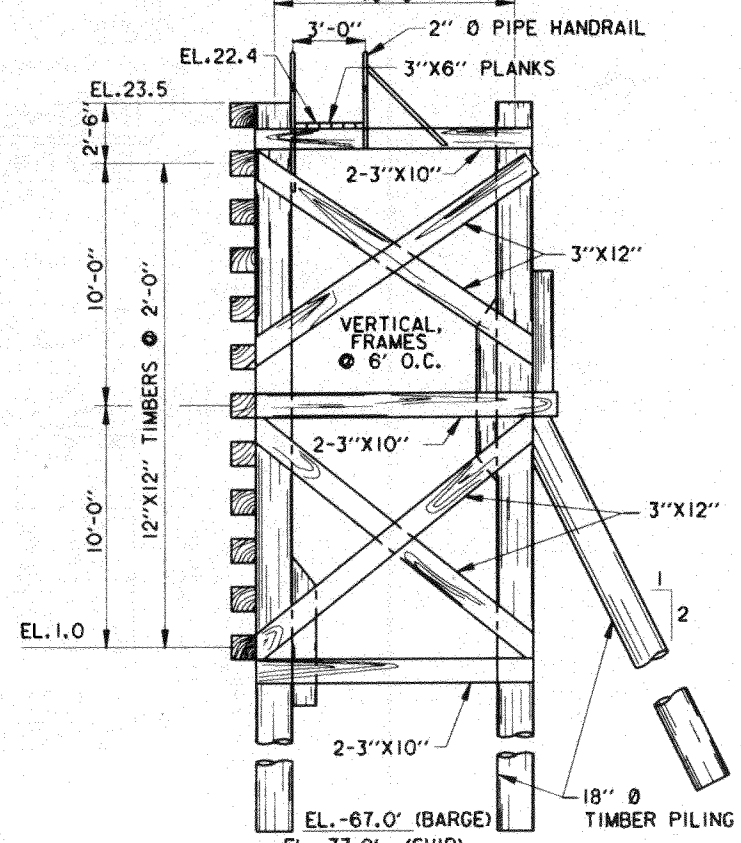

ALTERNATIVE 1- TIMBER GUIDEWALL SYSTEM

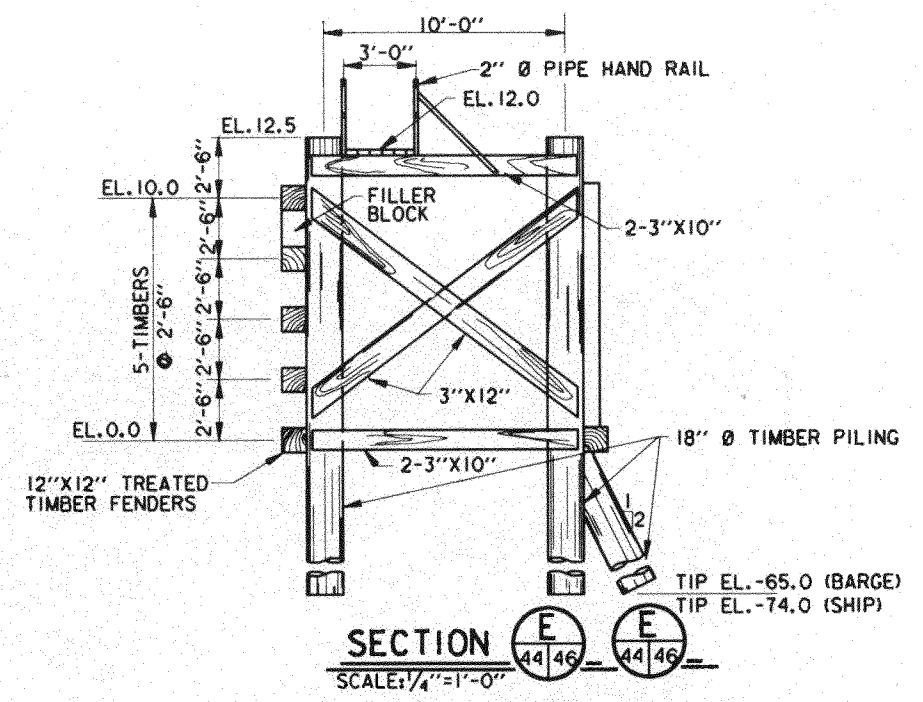

SECTION
SCALE:1/4"=1'-0"

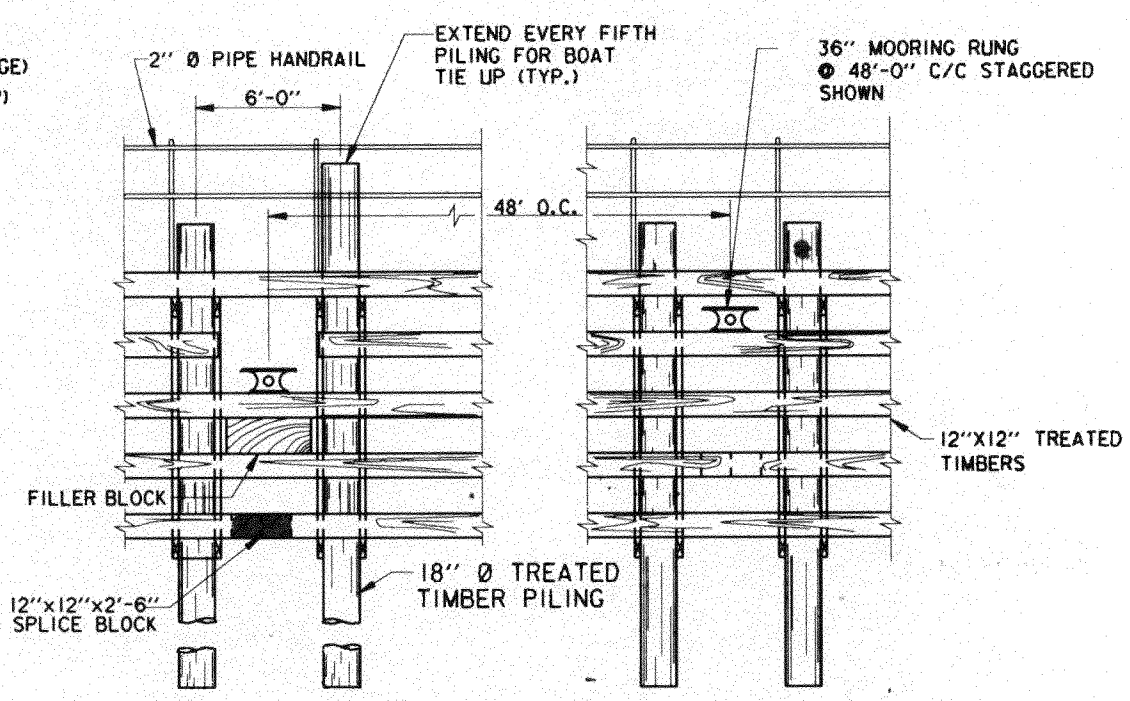

TYPICAL GUIDEWALL ELEVATION
SCALE:1/4"=1'-0"

NOTE:
THE EXISTING CHANNEL DEPTH AND SHAPE EXCEEDS THE REQUIRED BARGE CHANNEL. THE BARGE LOCK GUIDEWALLS ACCOMMONDATE THE EXISTING CHANNEL.

MISSISSIPPI RIVER - GULF OUTLET
NEW LOCK AND CONNECTION CHANNELS
(INDUSTRIAL CANAL LOCK REPLACEMENT)
FEASIBILITY STUDY
NORTH OF CLAIBORNE AVE. SITE

LOCK GUIDEWALL - DETAILS
SHIP AND BARGE LOCK

U.S. ARMY ENGINEER DISTRICT, NEW ORLEANS
CORPS OF ENGINEERS
NEW ORLEANS, LOUISIANA

DESIGNED BY: MHG	PLOT SCALE: 96	PLOT DATE: X	CADD FILE: FSDGUIDE.DGN
DRAWN BY: HAT			FILE NO. H-2-40392
CHECKED BY: ADS	DATE: NOVEMBER 1994		

PLATE B-46

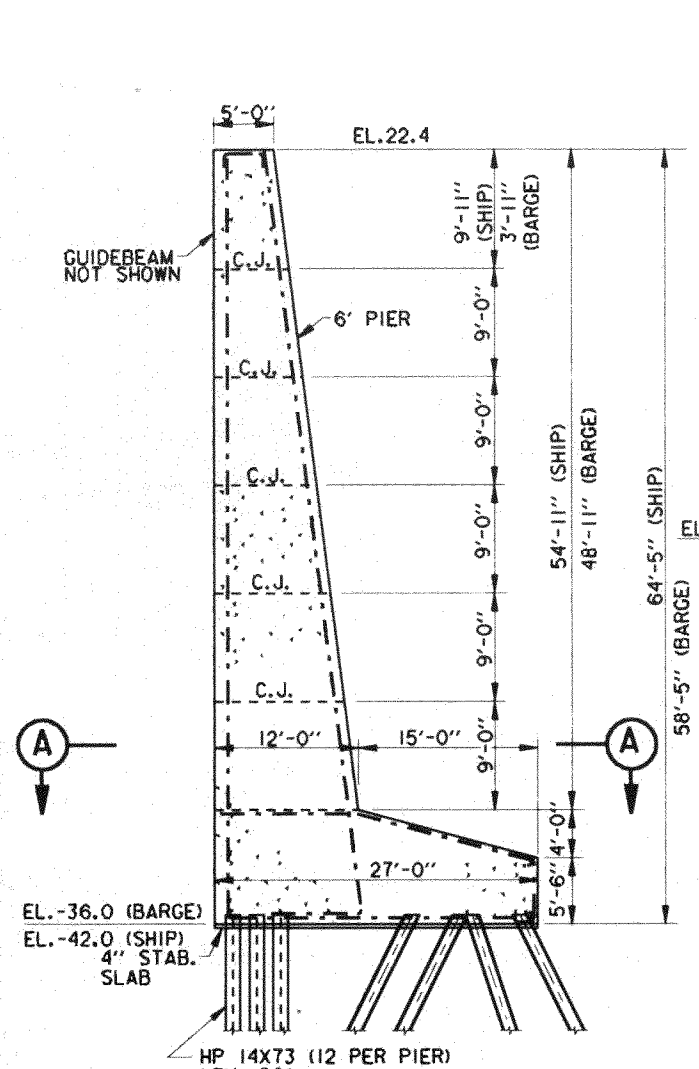

INTERMEDIATE PIER
FLOATING GUIDEWALL
SCALE: 1/8" = 1'-0"

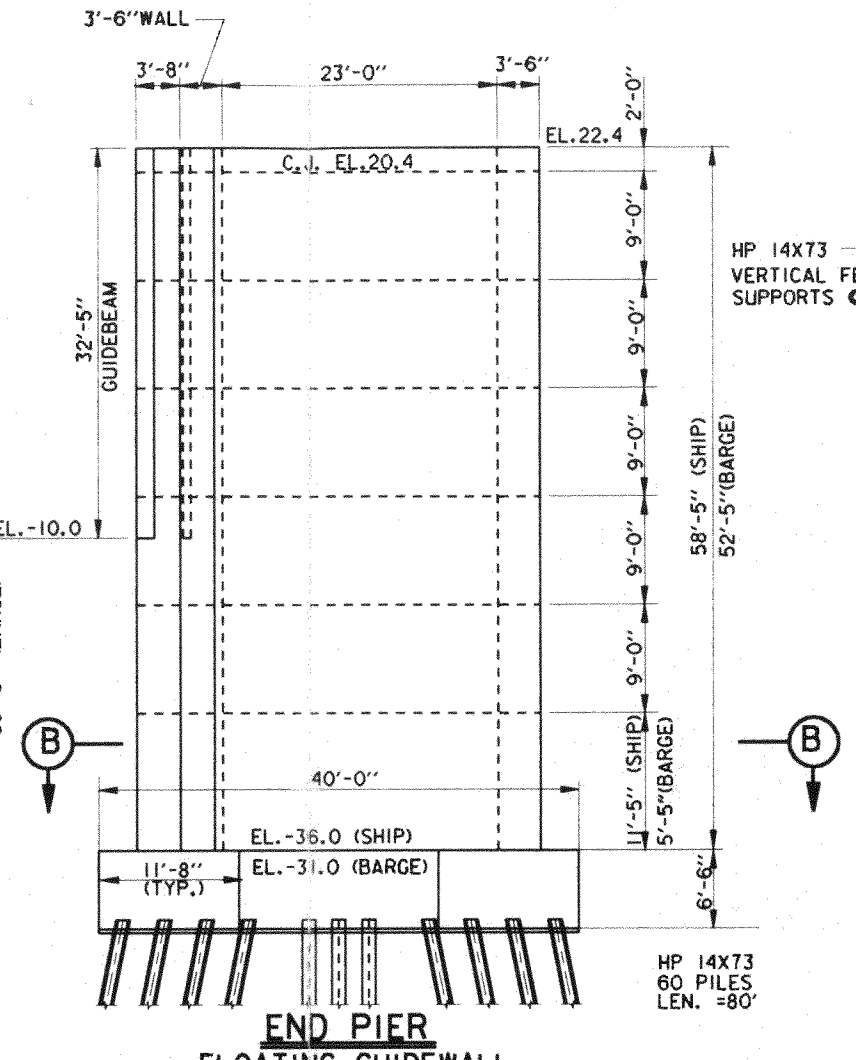

END PIER
FLOATING GUIDEWALL

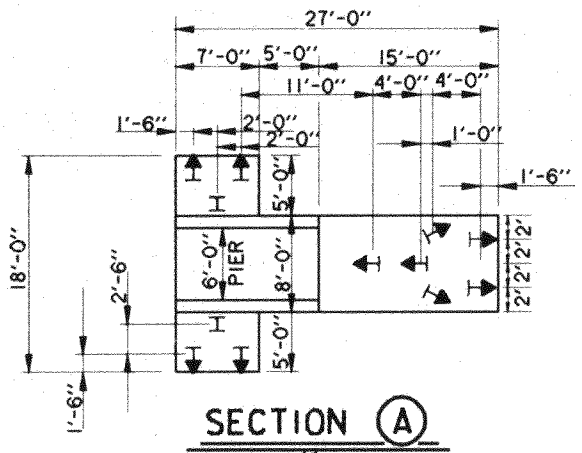

SECTION (A)
SCALE: 1/8" = 1'-0"

SCALE: 1/8" = 1'- 0"
0 5' 10' 15' 20' 25'

SCALE: 1/4" = 1'- 0"
12" 0 5' 10' 15' 20'

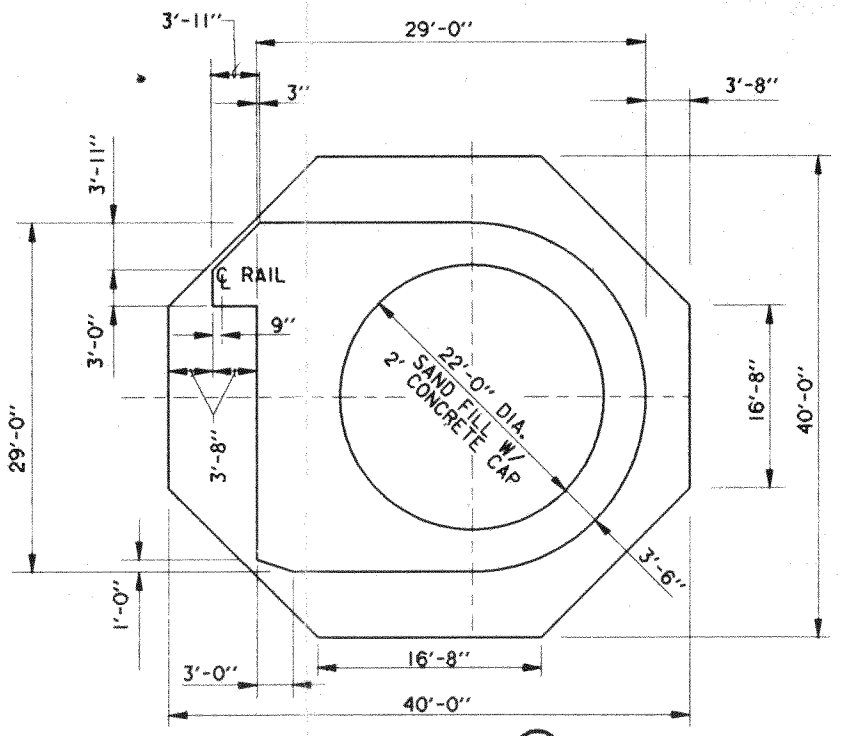

SECTION (B)
SCALE: 1/8" = 1'-0"

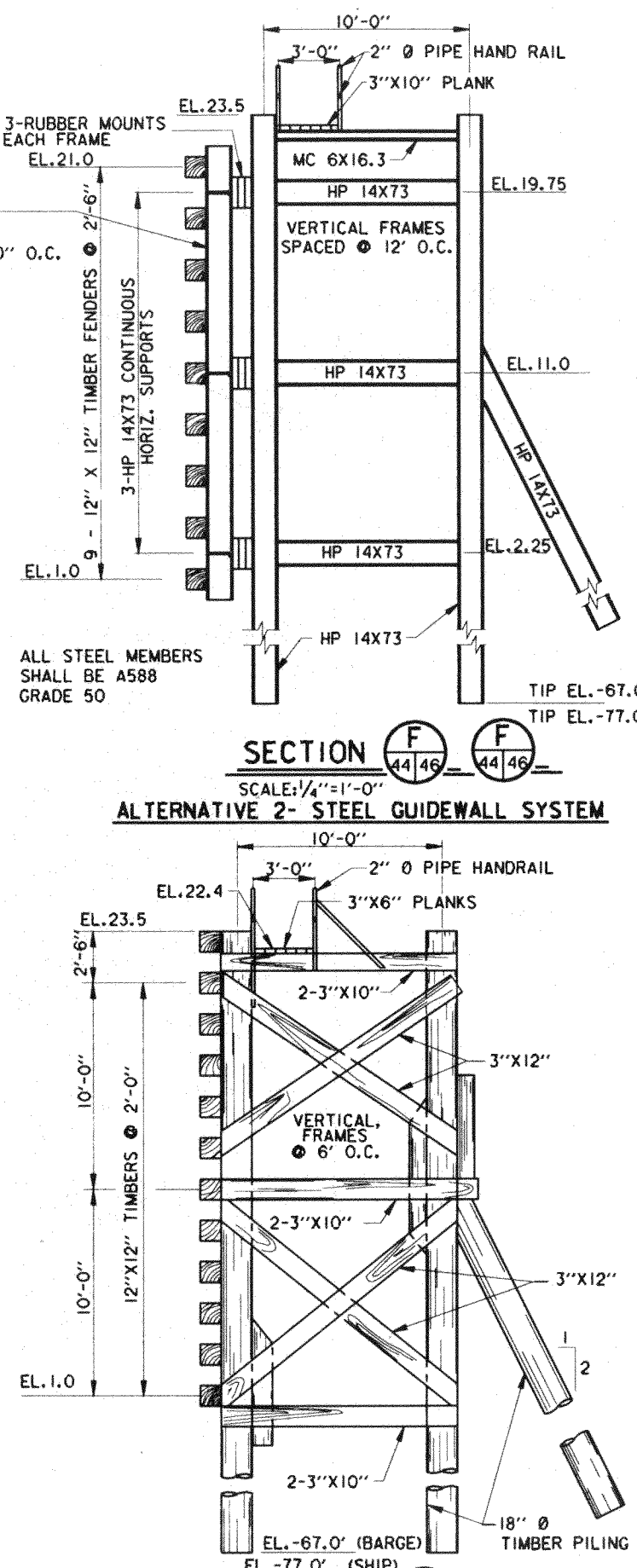

SECTION F 44 46 — F 44 46
SCALE: 1/4" = 1'-0"

ALTERNATIVE 2- STEEL GUIDEWALL SYSTEM

SECTION F 44 46 — F 44 46
ALTERNATIVE 1- TIMBER GUIDEWALL SYSTEM

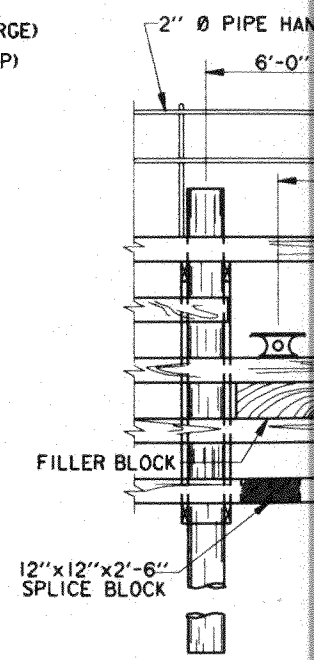

TYPI

NOTE:
THE EXISTING CHANNEL DEPT
THE REQUIRED BARGE CHANN
GUIDEWALLS ACCOMMONDATE

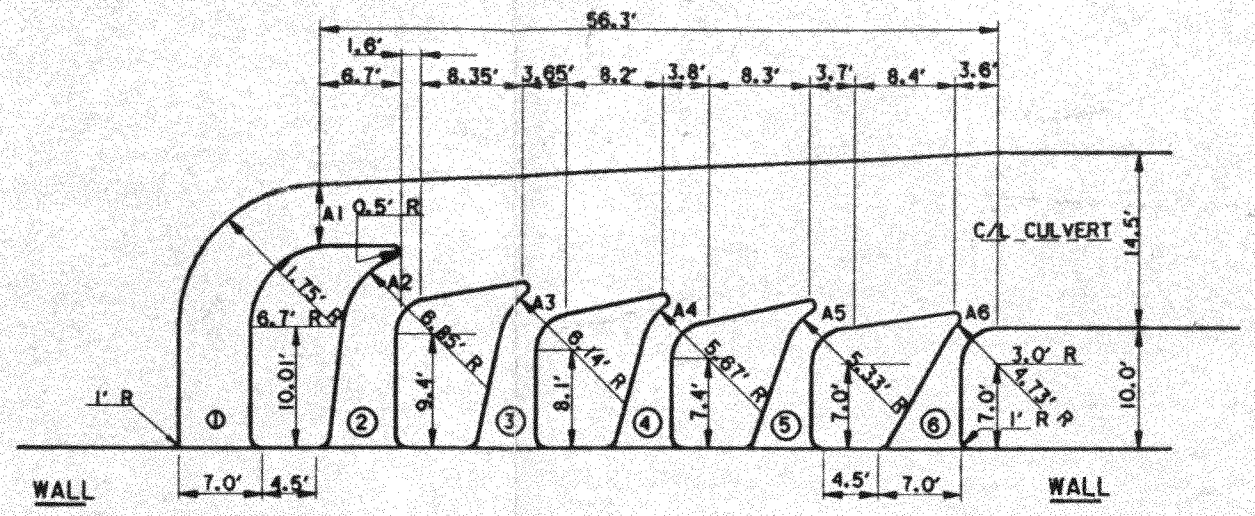

MANIFOLD - PLAN VIEW AND PORT DETAILS, BARGE LOCK AND COMBINATION BARGE AND SHIP LOCK

SCALE :3/16"=1'-0"

WILL HAVE THE
ERT,(14.5').
HROAT WILL HAVE
HE TOP OF CULVERT.

PORT	AT WALL HEIGHT	AT WALL WIDTH	AT THROAT	WIDTH	HEIGHT	INVERT ELEV.
①	14.5	7.0	A1	5.12	14.5'	(SAME AS LOCK FLOOR)
②	14.5	7.0	A2	3.73	14.5'	
③	14.5	7.0	A3	2.92	14.5'	
④	14.5	7.0	A4	2.51	14.5'	
⑤	14.5	7.0	A5	2.20	14.5'	
⑥	14.5	7.0	A6	1.94	14.5'	

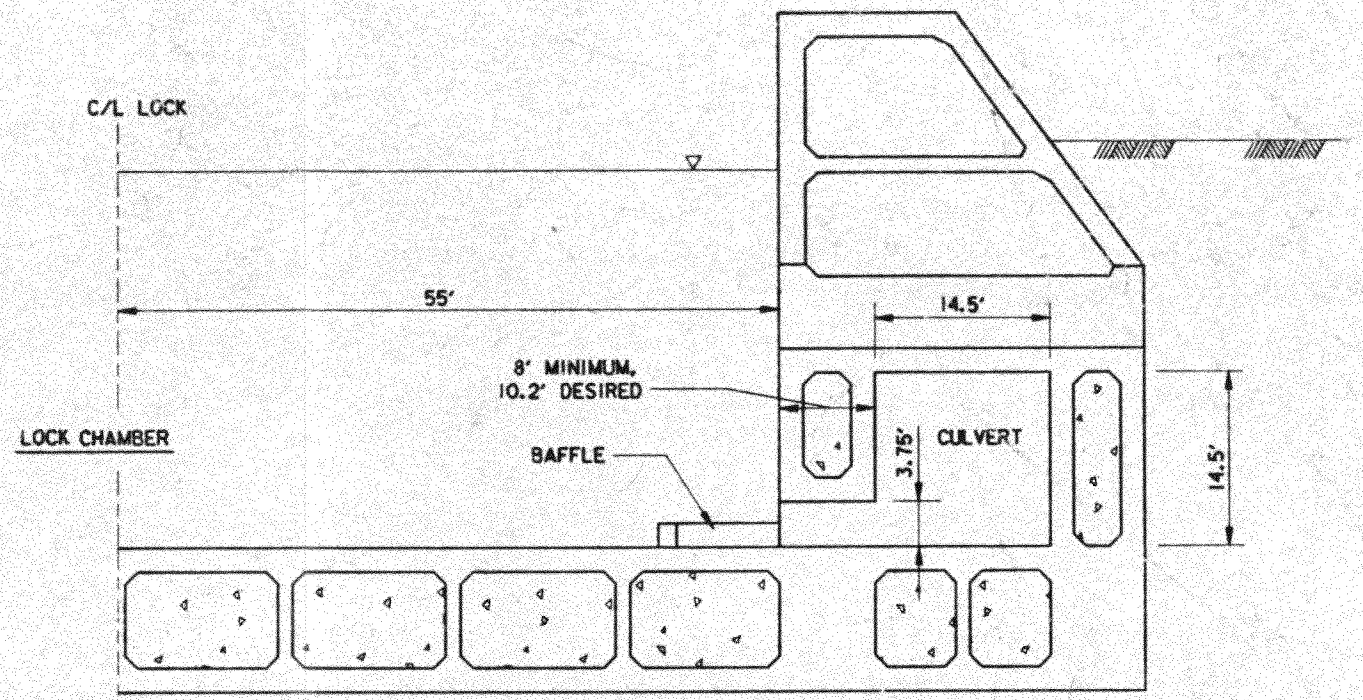

HALF SECTION - LOCK AND CULVERT SHIP AND BARGE

N.T.S.

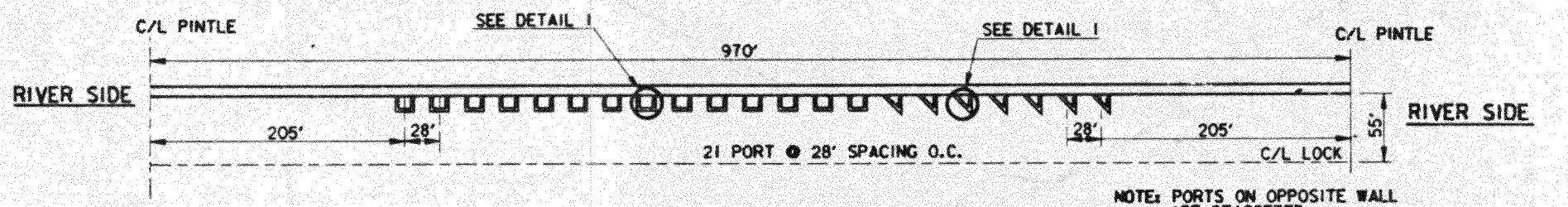

NOTE: PORTS ON OPPOSITE WALL ARE STAGGERED.

PLAN VIEW - OUTLET PORTS

N.T.S.

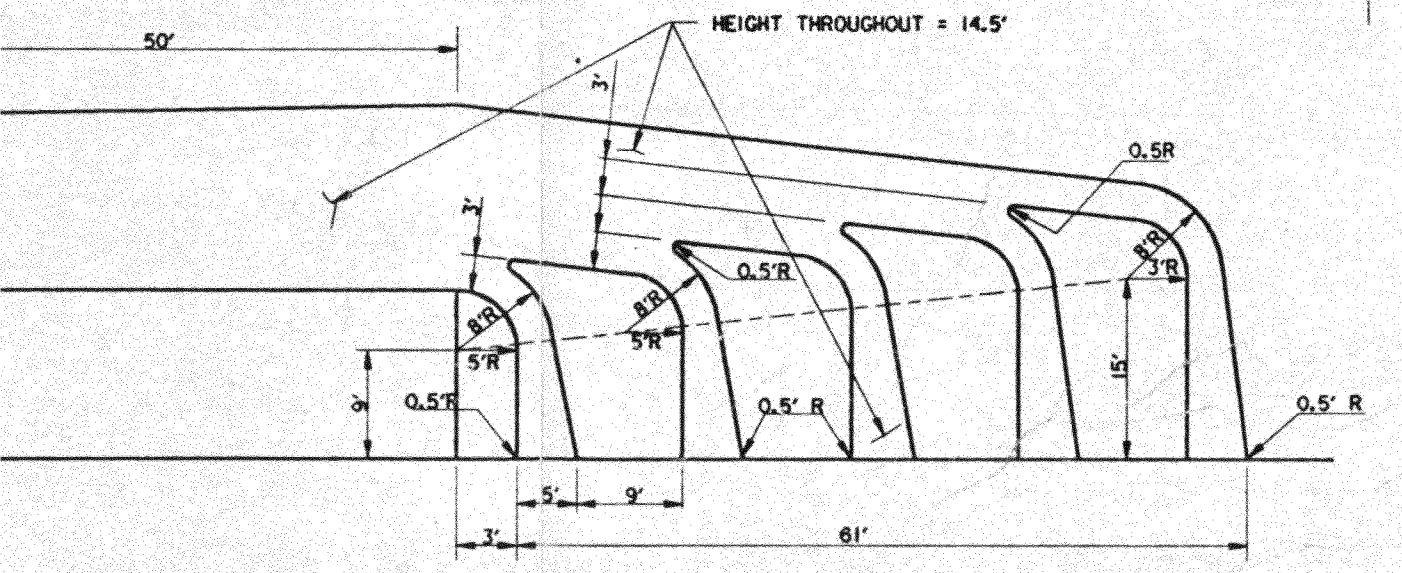

OUTLET MANIFOLD - PLAN VIEW - BARGE LOCK AND COMBINATION BARGE AND SHIP LOCK

SCALE:1/8"=1'-0"

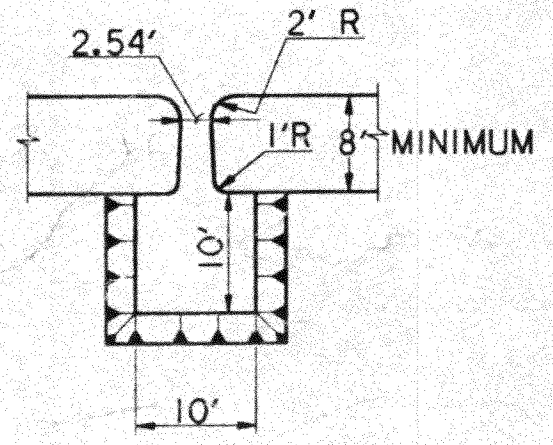

DETAIL ① RECTANGULAR DEFLECTOR

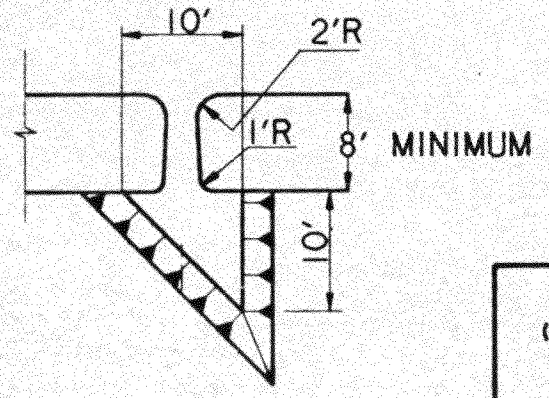

DETAIL ② TRIANGULAR DEFLECTOR

SCALE: 1/8" = 1'- 0"

0 5' 10' 15' 20' 25'

MISSISSIPPI RIVER - GULF OUTLET
NEW LOCK AND CONNECTING CHANNELS
(INDUSTRIAL CANAL LOCK REPLACEMENT)
FESIBILITY STUDY
NORTH OF CLAIBORNE AVE. SITE

LOCK INTAKE/OUTLET PORTS 900' LOCK CHAMBER

U.S. ARMY ENGINEER DISTRICT, NEW ORLEANS
CORPS OF ENGINEERS
NEW ORLEANS, LOUISIANA

DESIGNED BY: MHG	PLOT SCALE: 96	PLOT DATE: SEPT 96	CADD FILE: SFSHY090.DGN	
DRAWN BY: HAT			FILE NO.	H-2-40392
CHECKED BY: ADS	DATE: NOVEMBER 1994			

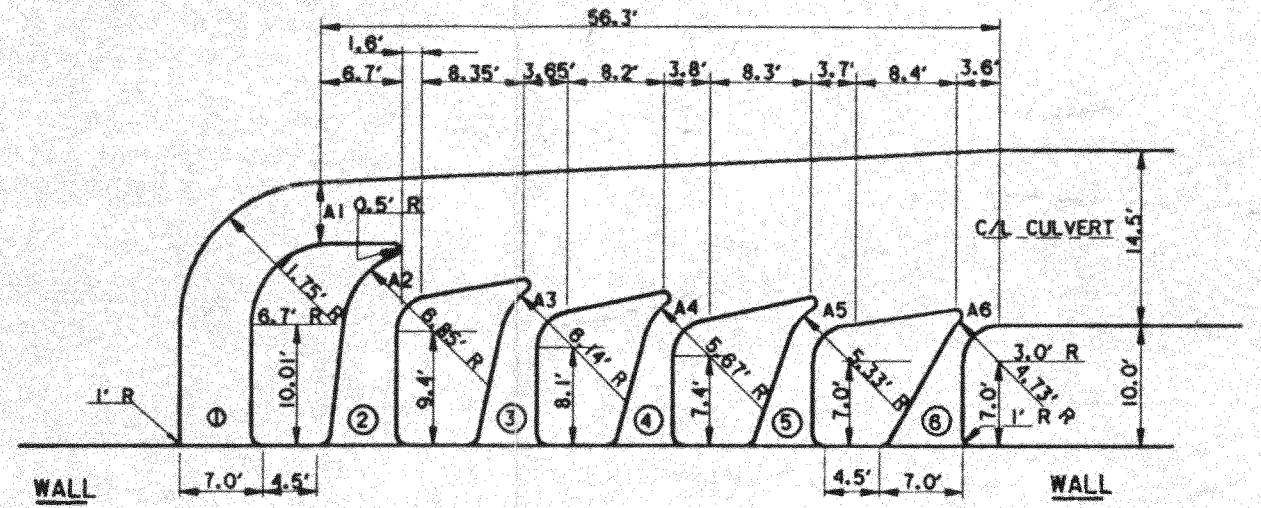

INTAKE MANIFOLD - PLAN VIEW AND PORT DETAILS, BARGE LOCK AND COMBINATION BARGE AND SHIP LOCK

SCALE :3/16"=1'-0"

NOTES:
THE THROAT OF THE PORTSWILL HAVE THE SAME HEIGHT AS THE CULVERT,(14.5') .
THE TOP OF THE PORT'S THROAT WILL HAVE THE SAME ELEVATION AS THE TOP OF CULVERT.
ELEVATIONS ARE IN NGVD.

PORT	AT WALL HEIGHT	AT WALL WIDTH	AT THROAT	WIDTH	HEIGHT	INVERT ELEV.
①	14.5	7.0	A1	5.12	14.5'	(SAME AS LOCK FLOOR)
②	14.5	7.0	A2	3.73	14.5'	
③	14.5	7.0	A3	2.92	14.5'	
④	14.5	7.0	A4	2.51	14.5'	
⑤	14.5	7.0	A5	2.20	14.5'	
⑥	14.5	7.0	A6	1.94	14.5'	

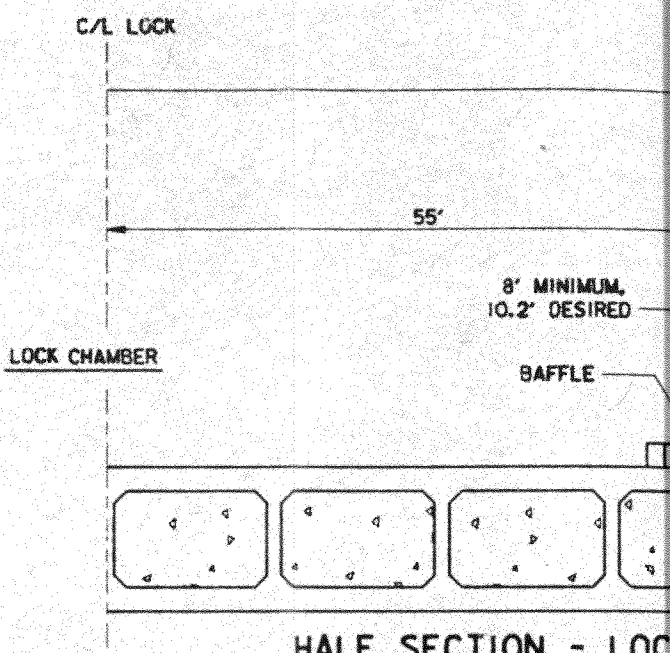

HALF SECTION - LOC SHIP AND

N.T.S.

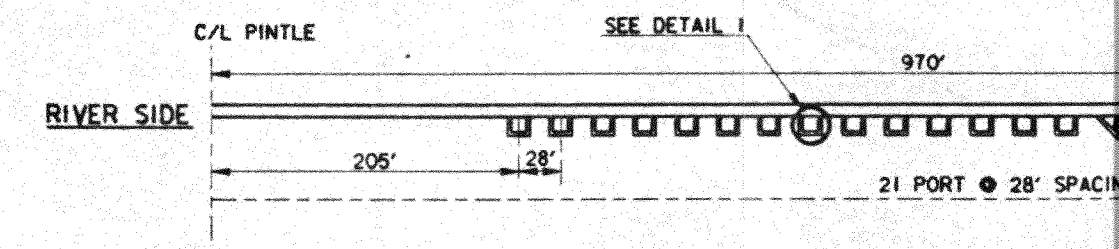

PLAN VIEW - OUT

N.T.S.

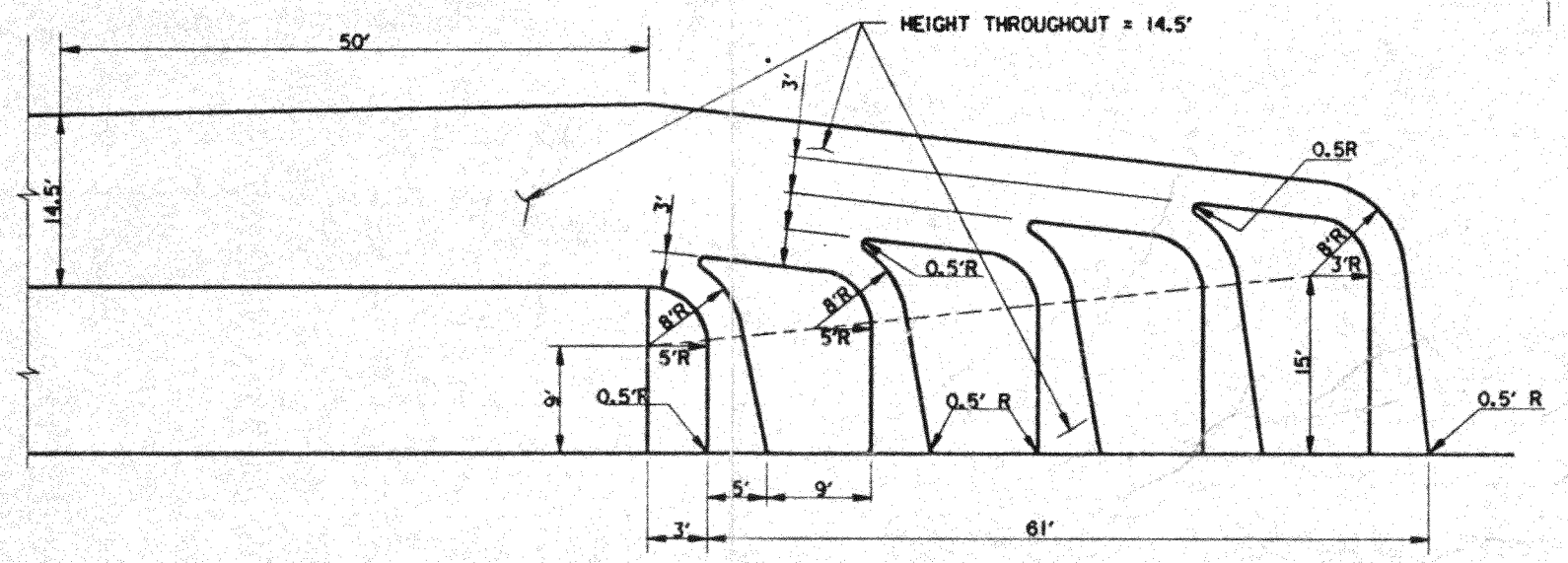

OUTLET MANIFOLD - PLAN VIEW - BARGE LOCK AND COMBINATION BARGE AND SHIP LOCK

SCALE:1/8"=1'-0"

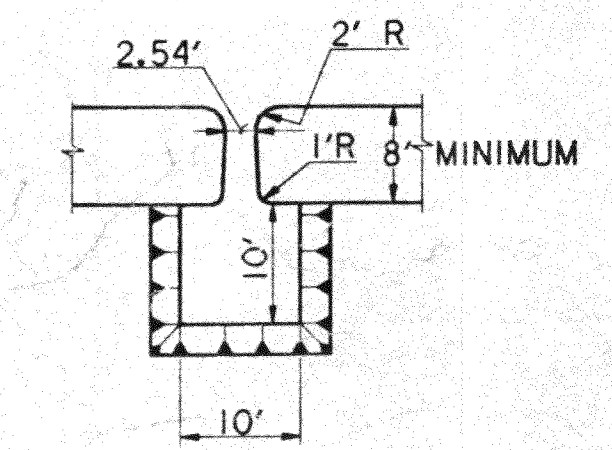

DETAIL (1) RECTANGULAR DEFLECTOR

DE TRIANGULAR

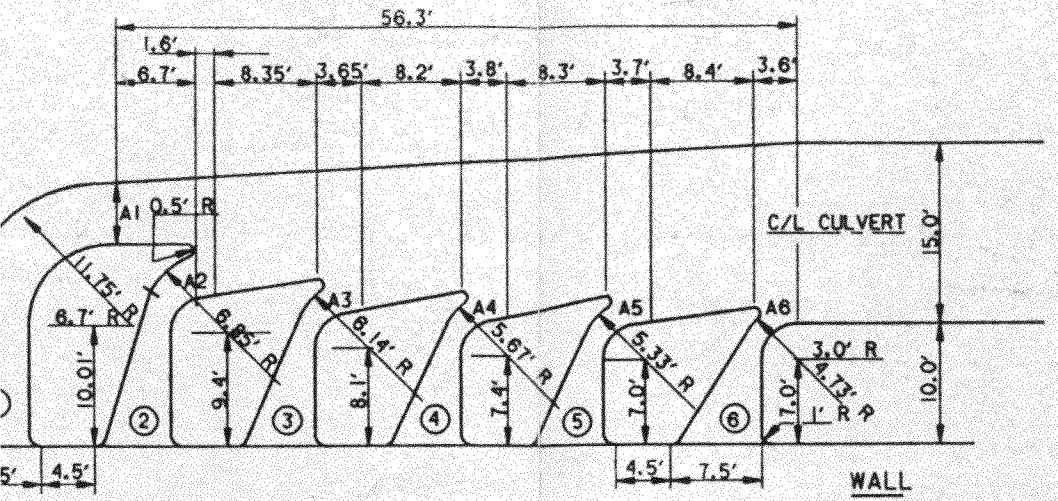

PLAN VIEW AND PORT DETAILS, BARGE LOCK AND COMBINATION BARGE AND SHIP LOCK

SCALE :3/16"=1'-0"

PORT	AT WALL HEIGHT	AT WALL WIDTH		AT THROAT WIDTH	AT THROAT HEIGHT	INVERT ELEV.
①	18.2'	7.5'	A1	5.29'	18.2'	(SAME AS LOCK FLOOR)
②	18.2'	7.5'	A2	3.86'	18.2'	
③	18.2'	7.5'	A3	3.02'	18.2'	
④	18.2'	7.5'	A4	2.59'	18.2'	
⑤	18.2'	7.5'	A5	2.28'	18.2'	
⑥	18.2'	7.5'	A6	2.01'	18.2'	

VE THE
).
ILL HAVE
OF CULVERT.

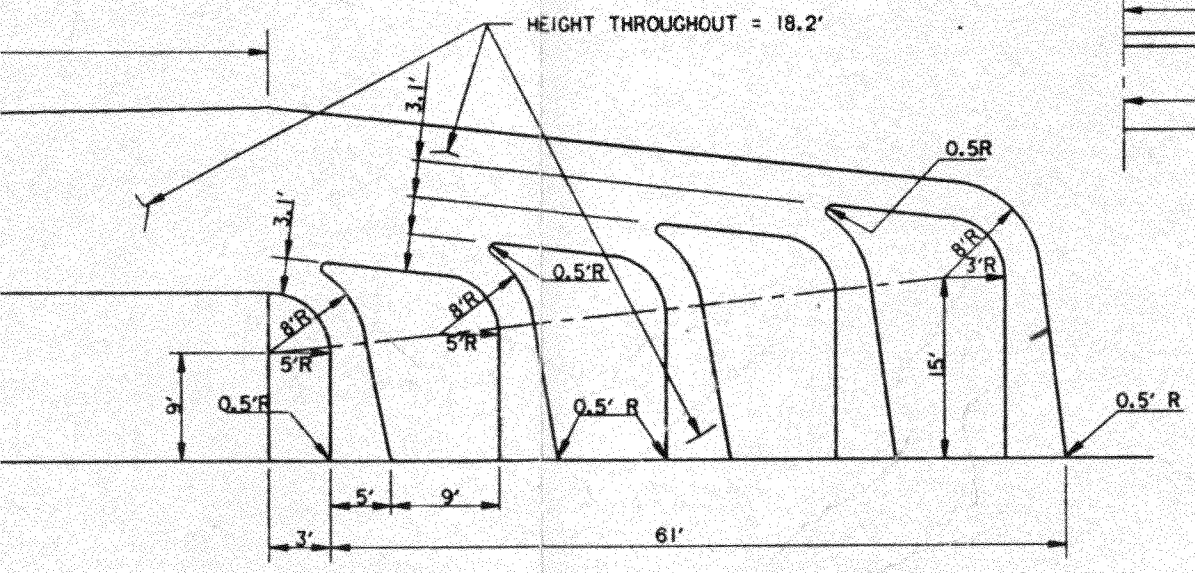

OUTLET MANIFOLD - PLAN VIEW - BARGE LOCK AND COMBINATION BARGE AND SHIP LOCK

SCALE:1/8"=1'-0"

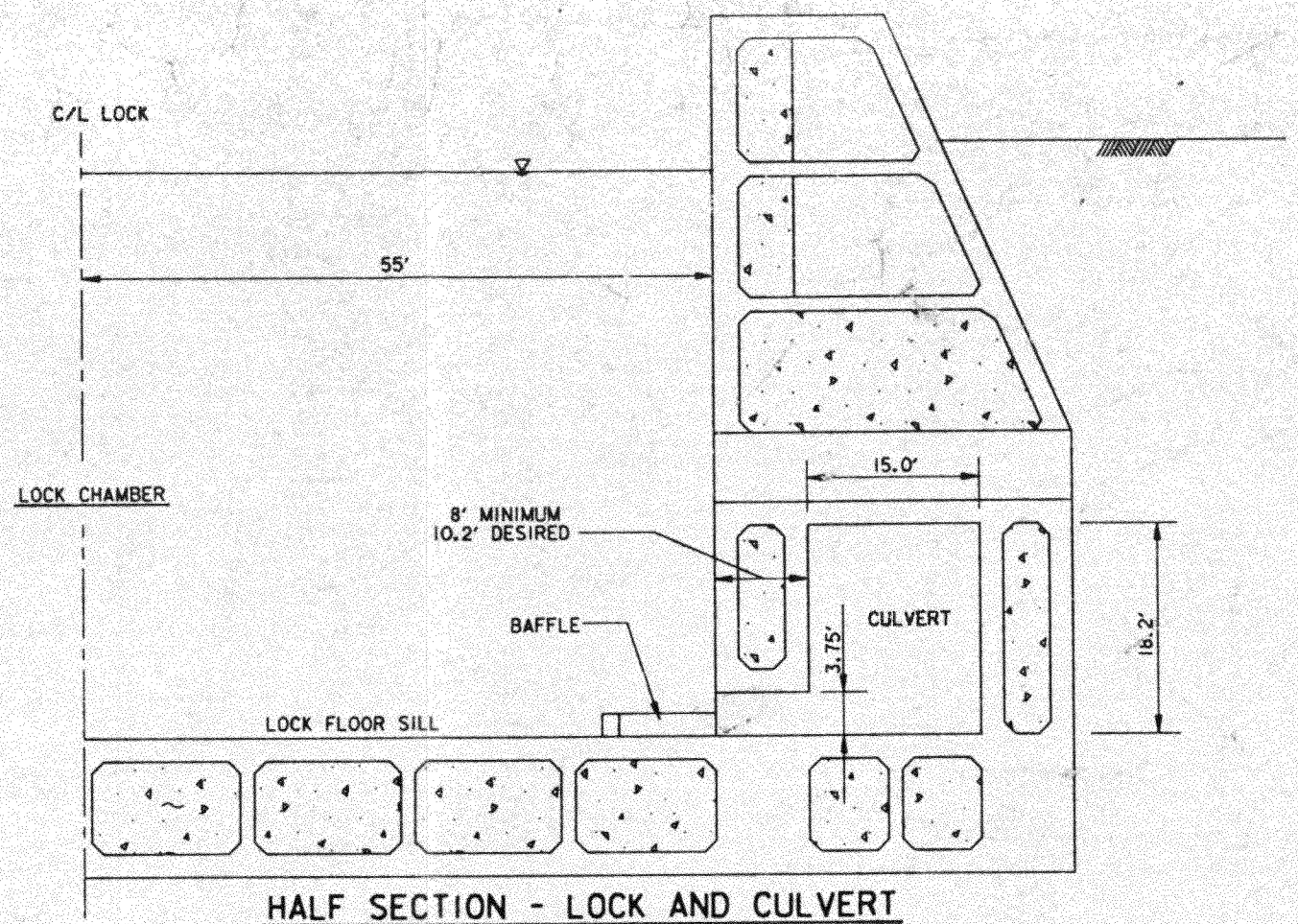

HALF SECTION - LOCK AND CULVERT SHIP AND BARGE

N.T.S.

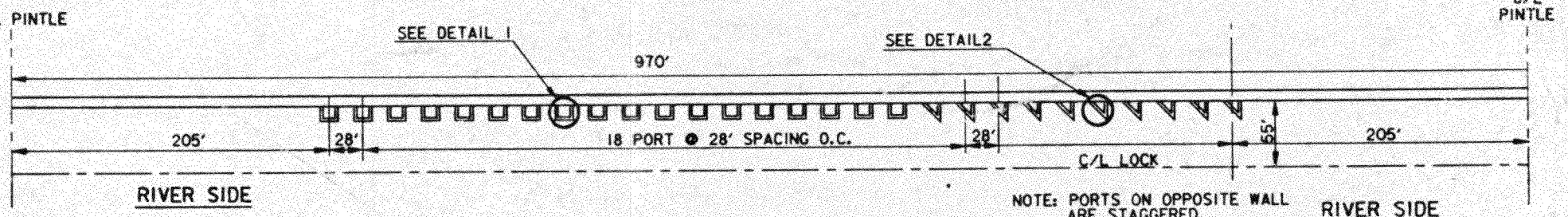

PLAN VIEW - OUTLET PORTS

N.T.S.

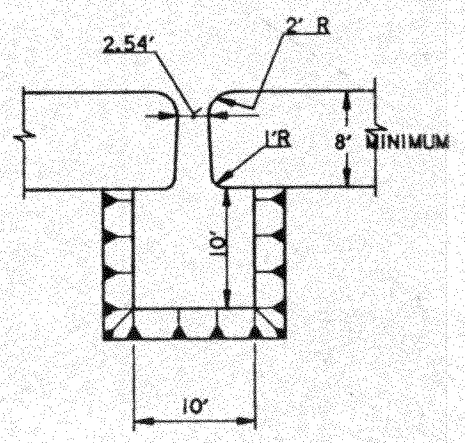

DETAIL (1) RECTANGULAR DEFLECTOR

SCALE:1/8"=1'-0"

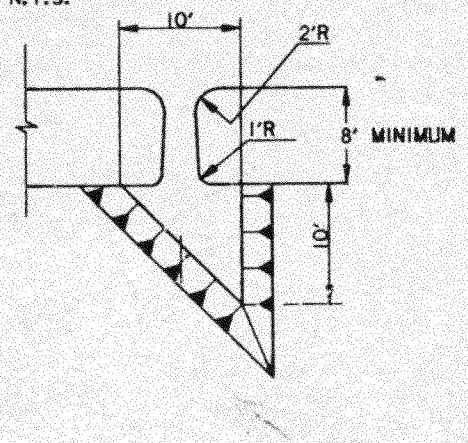

DETAIL (2) TRIANGULAR DEFLECTOR

SCALE:1/8"=1'-0"

SCALE: 1/8" = 1'- 0"

0 5' 10' 15' 20' 25'

MISSISSIPPI RIVER - GULF OUTLET
NEW LOCK AND CONNECTING CHANNEL
(INDUSTRIAL CANAL LOCK REPLACEMENT)
FEASIBILITY STUDY
NORTH OF CLAIBORNE AVE. SITE

LOCK INTAKE/OUTLET PORTS 1200' LOCK CHAMBER

U.S. ARMY ENGINEER DISTRICT, NEW ORLEANS
CORPS OF ENGINEERS
NEW ORLEANS, LOUISIANA

DESIGNED BY: NHG	PLOT SCALE: 96	PLOT DATE: SEPT 96	CADD FILE: SPSHY120.DGN	
DRAWN BY: NAT			FILE NO.	H-2-40392
CHECKED BY: ADS	DATE: NOVEMBER 1994			

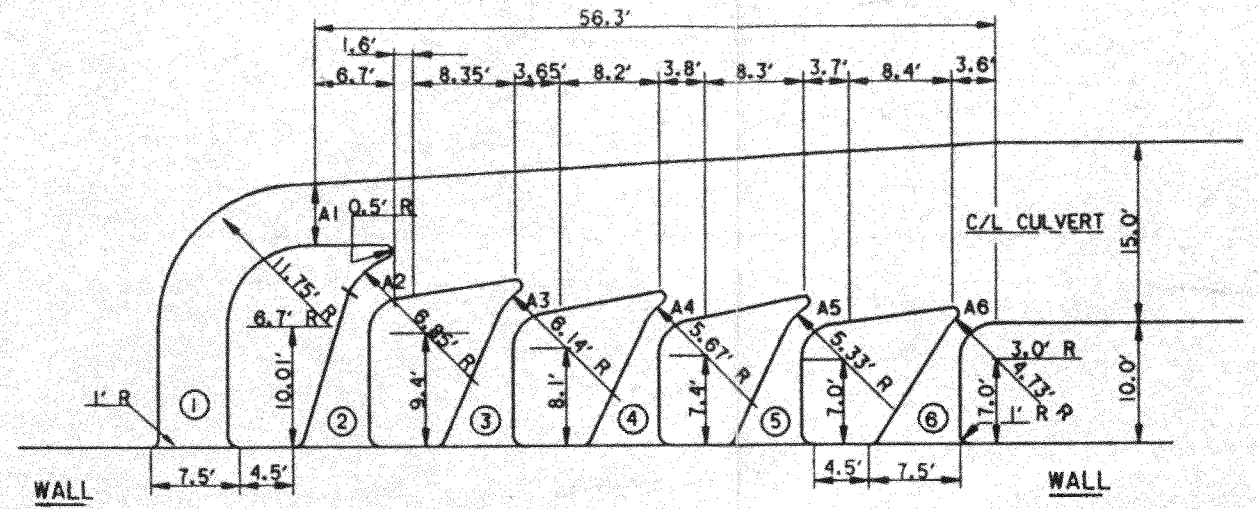

INTAKE MANIFOLD - PLAN VIEW AND PORT DETAILS, BARGE LOCK AND COMBINATION BARGE AND SHIP LOCK

SCALE :3/16"=1'-0"

NOTES:

THE THROAT OF THE PORTSWILL HAVE THE SAME HEIGHT AS THE CULVERT,(18.2') .
THE TOP OF THE PORT'S THROAT WILL HAVE THE SAME ELEVATION AS THE TOP OF CULVERT.
ELEVATIONS ARE IN NGVD.

PORT	AT WALL HEIGHT	AT WALL WIDTH		AT THROAT WIDTH	AT THROAT HEIGHT	INVERT ELEV.
①	18.2'	7.5'	A1	5.29'	18.2'	(SAME AS LOCK FLOOR)
②	18.2'	7.5'	A2	3.86'	18.2'	
③	18.2'	7.5'	A3	3.02'	18.2'	
④	18.2'	7.5'	A4	2.59'	18.2'	
⑤	18.2'	7.5'	A5	2.28'	18.2'	
⑥	18.2'	7.5'	A6	2.01'	18.2'	

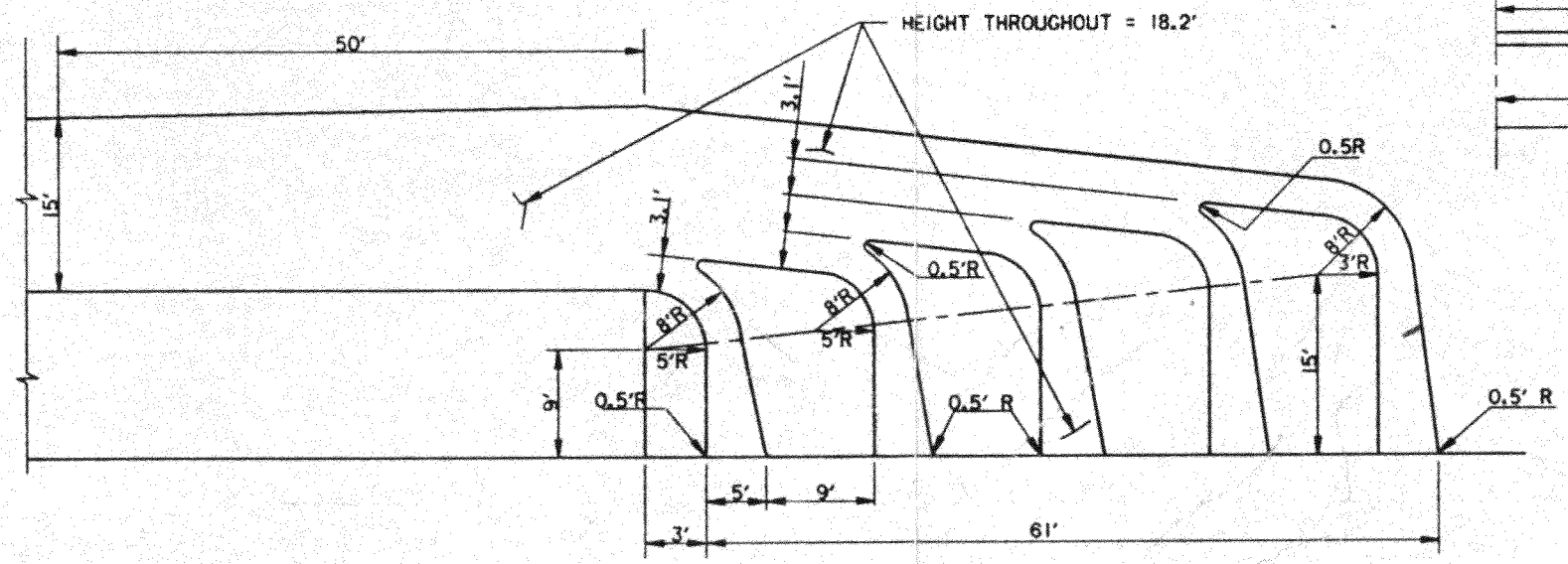

OUTLET MANIFOLD - PLAN VIEW - BARGE LOCK AND COMBINATION BARGE AND SHIP LOCK

SCALE:1/8"=1'-0"

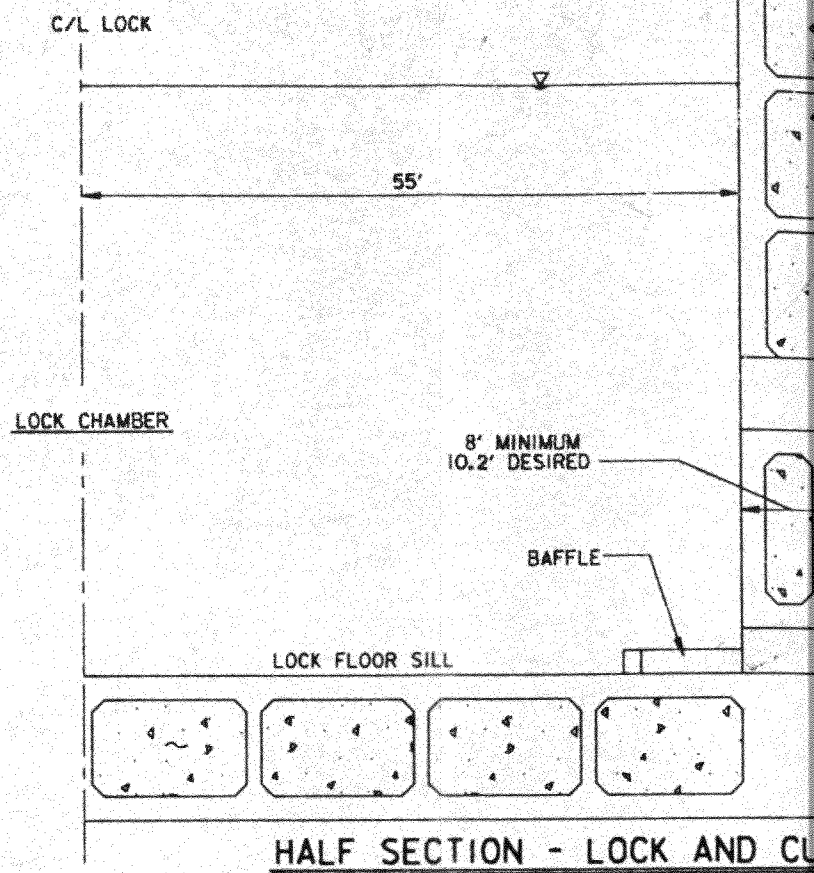

HALF SECTION - LOCK AND CU SHIP AND BARGE

N.T.S.

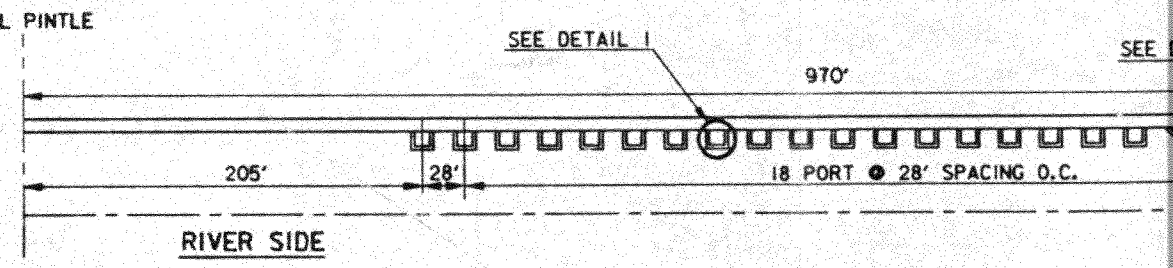

PLAN VIEW - OUTLET P

N.T.S.

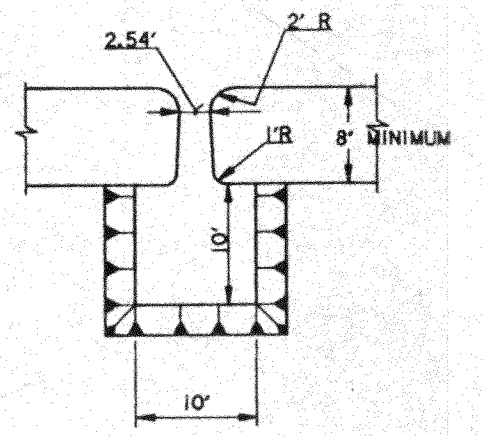

DETAIL (1) RECTANGULAR DEFLECTOR

SCALE:1/8"=1'-0"

DETAI TRIANGULAR DE

SCALE:1/8"=1'-0

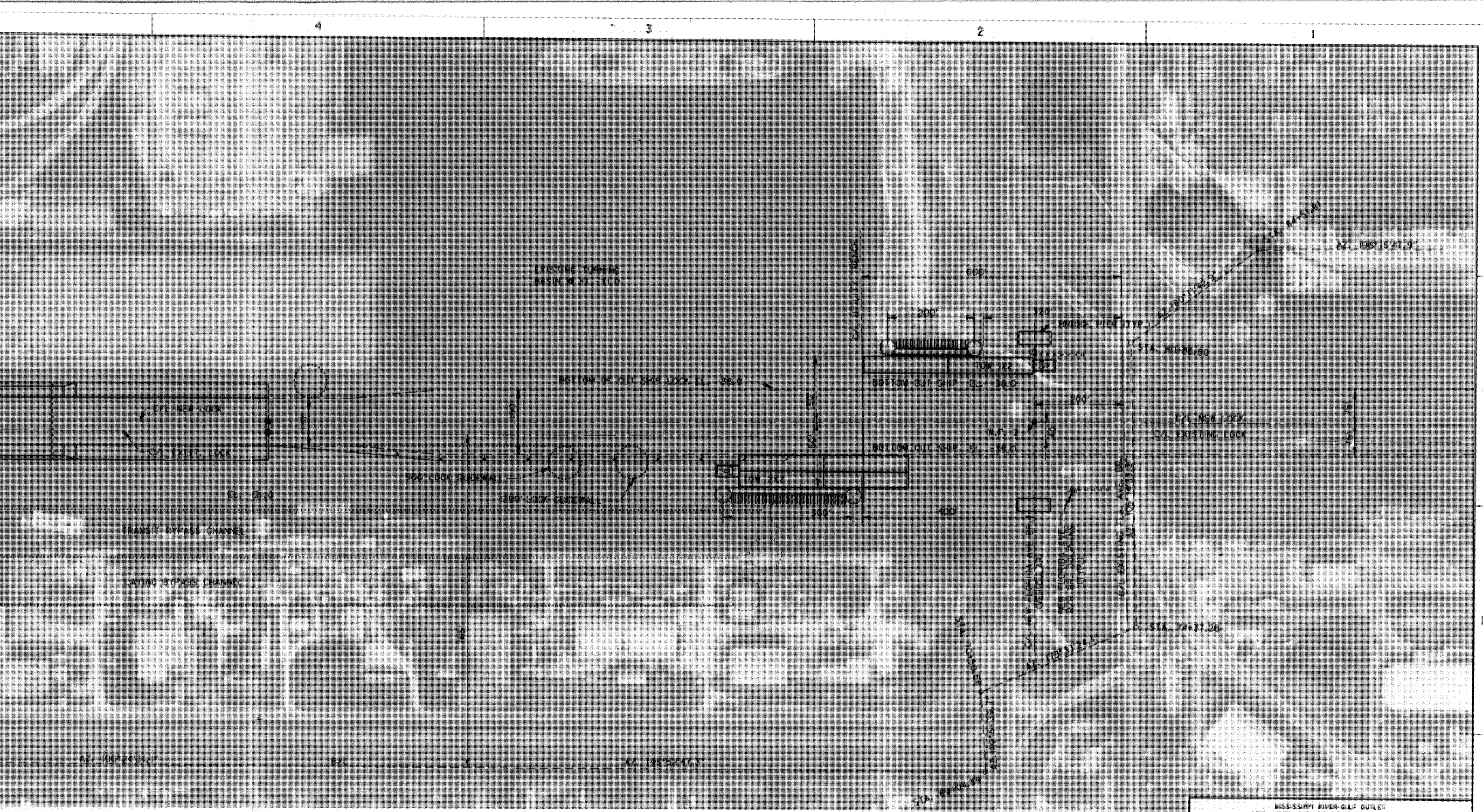

MISSISSIPPI RIVER-GULF OUTLET
NEW LOCK AND CONNECTING CHANNELS
(INDUSTRIAL CANAL LOCK REPLACEMENT)
FEASIBILITY STUDY
NORTH OF CLAIBORNE AVE. SITE

PERMANENT MOORING DETAILS
NORTH END NEW LOCK TO FLA. AVE.

U.S. ARMY ENGINEER DISTRICT, NEW ORLEANS
CORPS OF ENGINEERS
NEW ORLEANS, LOUISIANA

DESIGNED BY: MHG	PLOT SCALE: 100	PLOT DATE: X	CADD FILE: NEPMOORES.DGN	
DRAWN BY: HAT			FILE NO. H-2-40392	
CHECKED BY: ADS	DATE: NOVEMBER 1994			

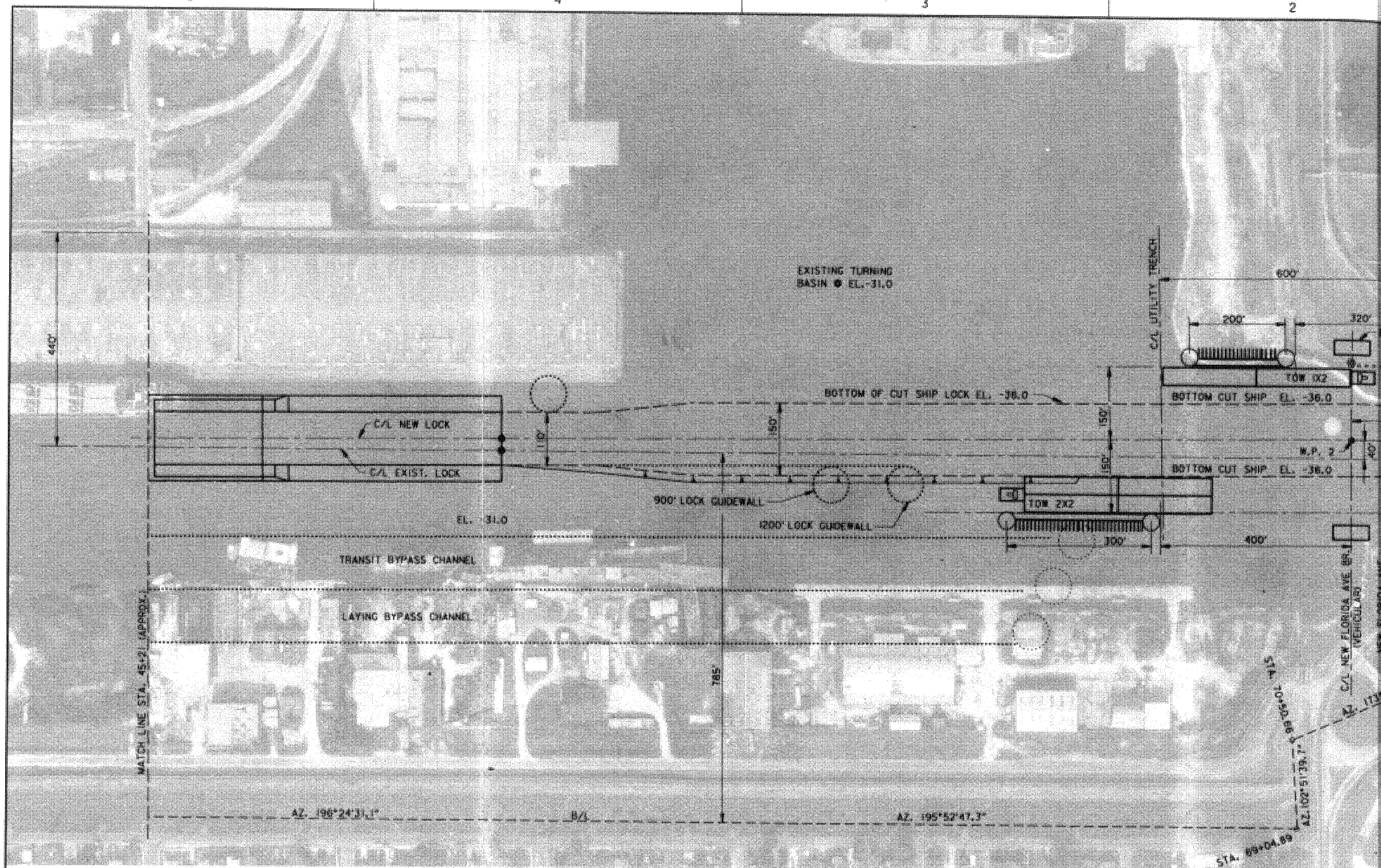

SCALE: 1" = 100'

100' 0 100' 200' 300' 400'

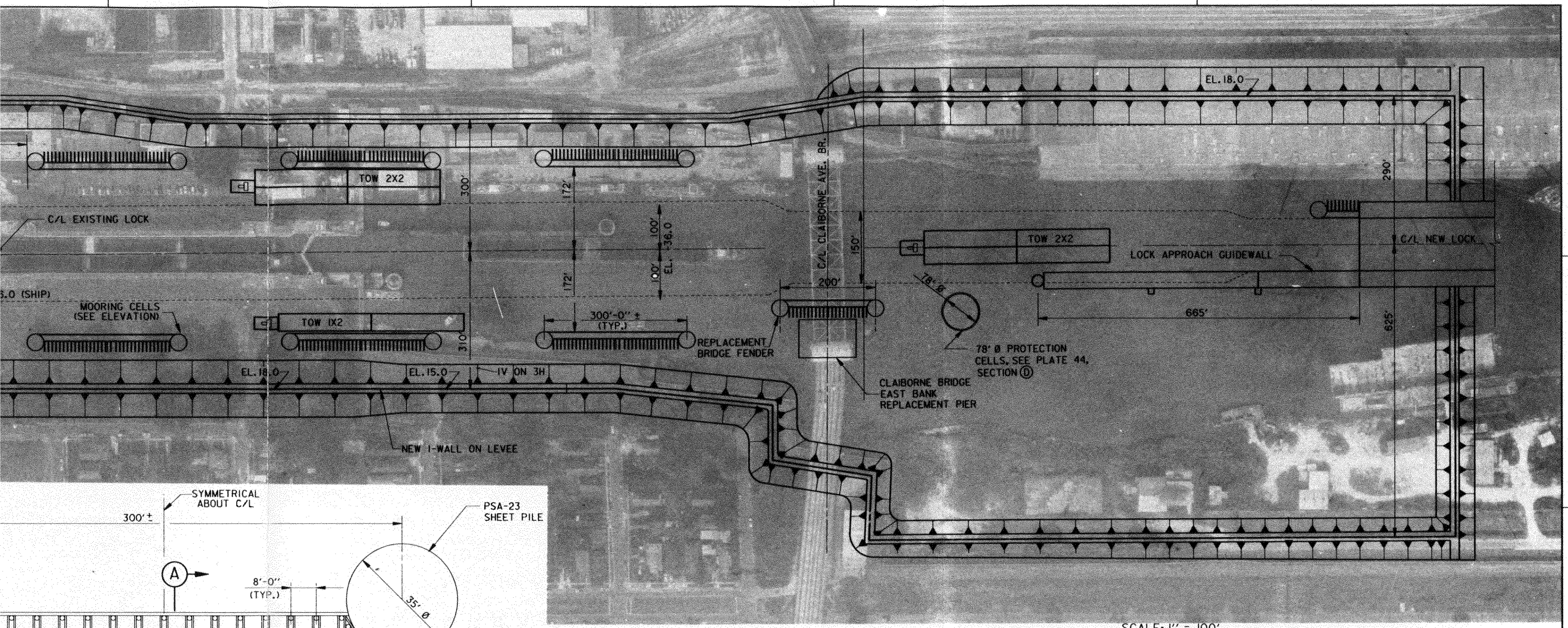

SCALE: 1" = 100'

100' 0 100' 200' 300' 400'

PLAN

SCALE: 1/16"=1'-0"

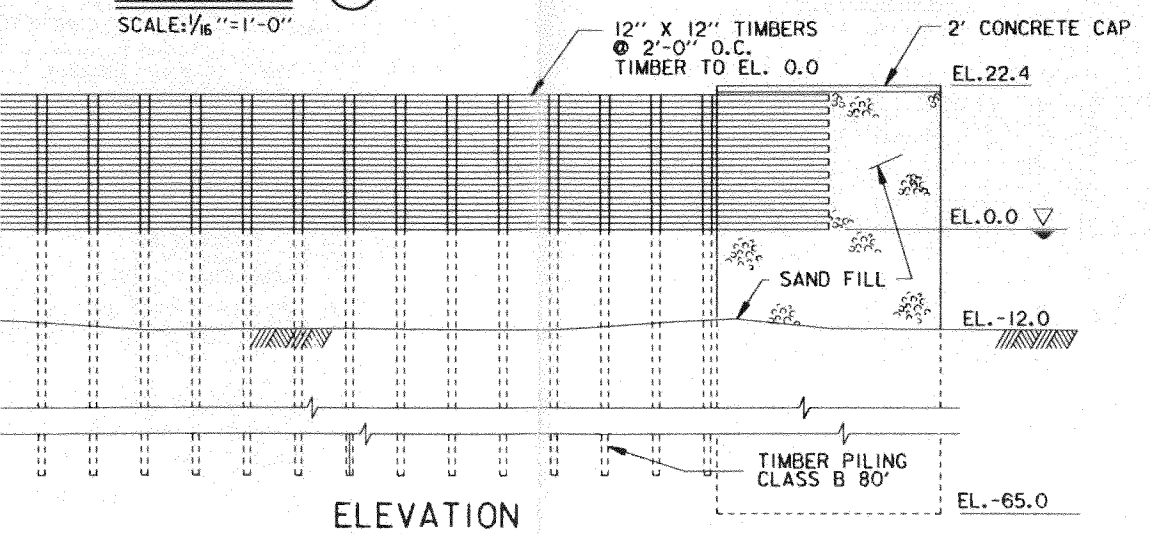

ELEVATION

SCALE: 1/16"=1'-0"

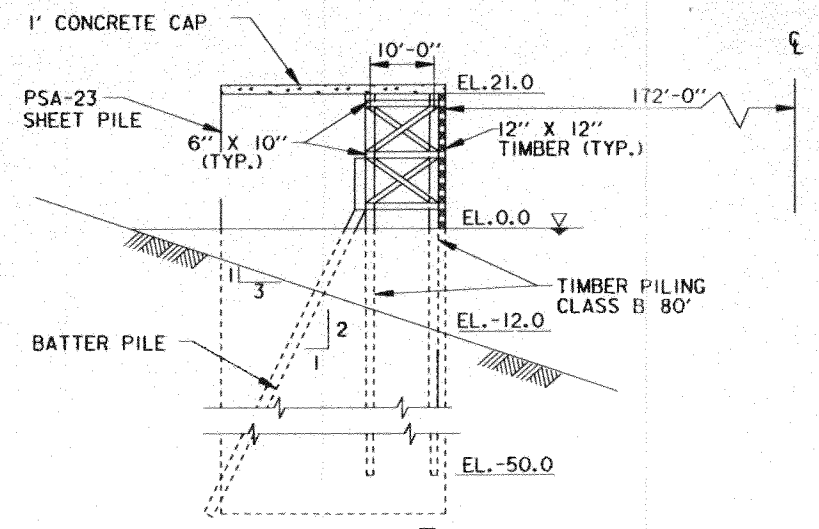

SECTION (A)

SCALE: 1/16"=1'-0"

MISSISSIPPI RIVER - GULF OUTLET
NEW LOCK AND CONNECTING CHANNELS
(INDUSTRIAL CANAL LOCK REPLACEMENT)
FEASIBILITY STUDY
NORTH OF CLAIBORNE AVE.

PERMANENT MOORING DETAILS 900' BARGE LOCK

U.S. ARMY ENGINEER DISTRICT, NEW ORLEANS
CORPS OF ENGINEERS
NEW ORLEANS, LOUISIANA

DESIGNED BY: MHG	PLOT SCALE: 1200	PLOT DATE: X	CADD FILE: FSSTCLBR.DGN	
DRAWN BY: HAT			FILE NO.	H-2-40392
CHECKED BY: ADS	DATE: NOVEMBER 1994			

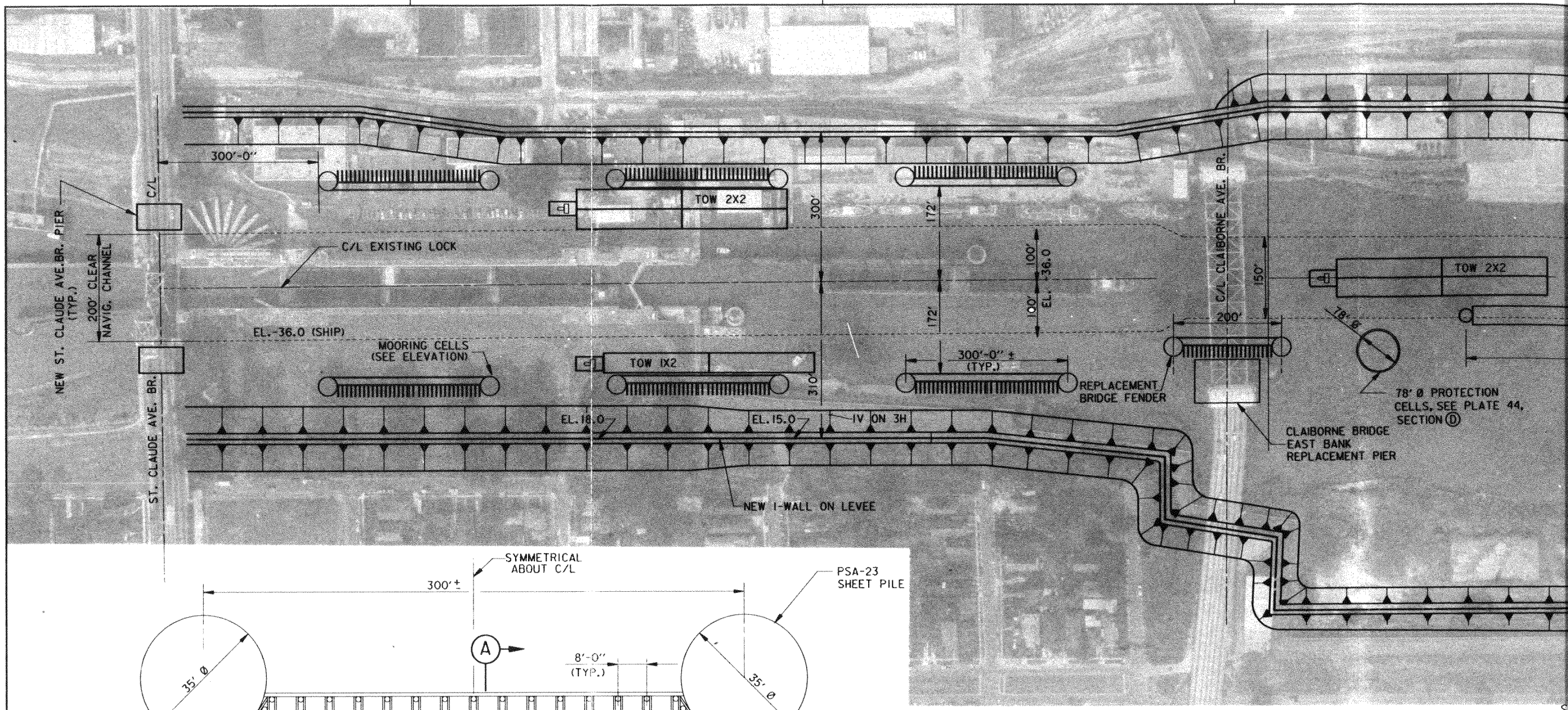

PLAN

SCALE: 1/16" = 1'-0"

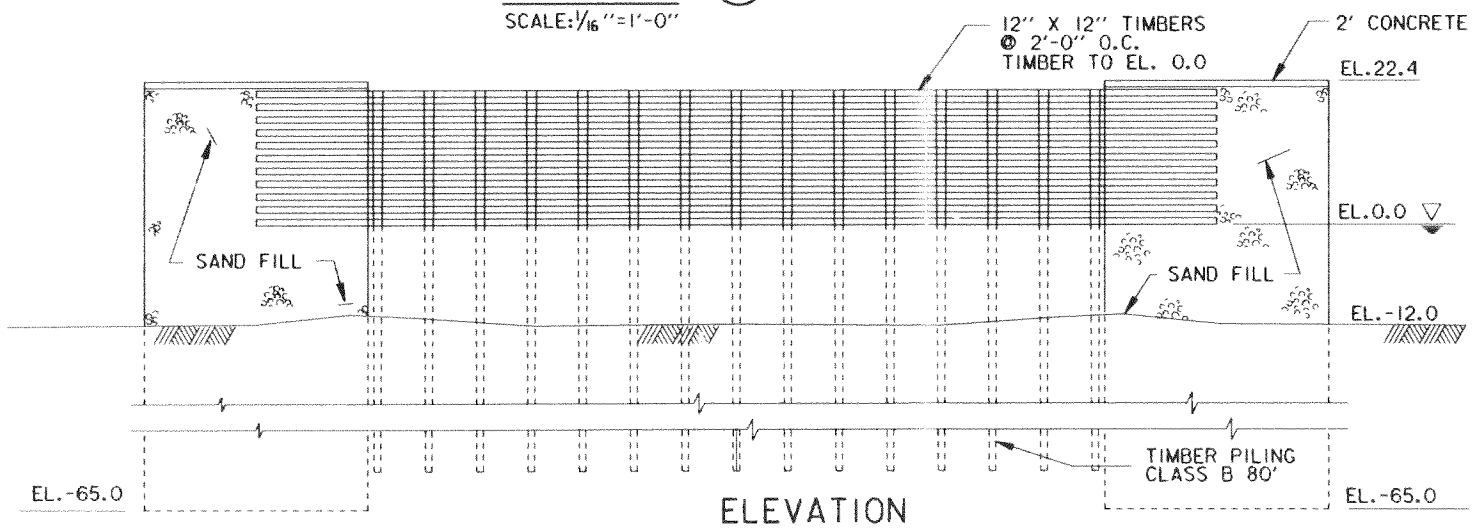

ELEVATION

SCALE: 1/16" = 1'-0"

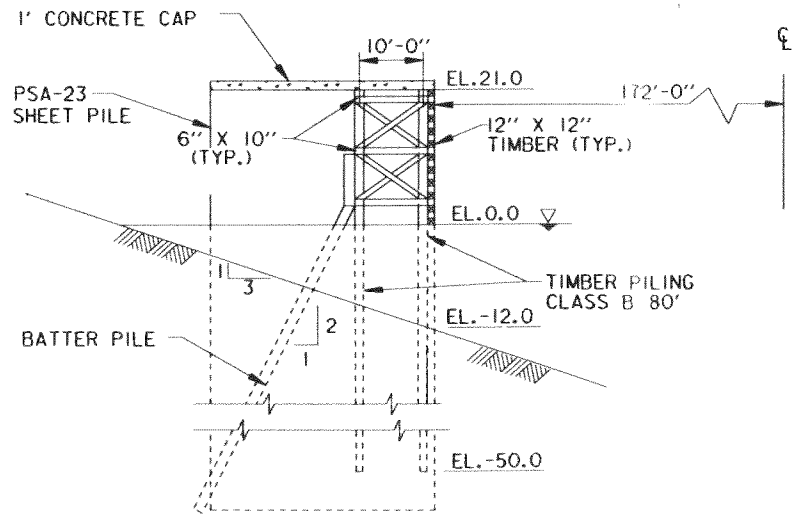

SECTION (A)

SCALE: 1/16" = 1'-0"

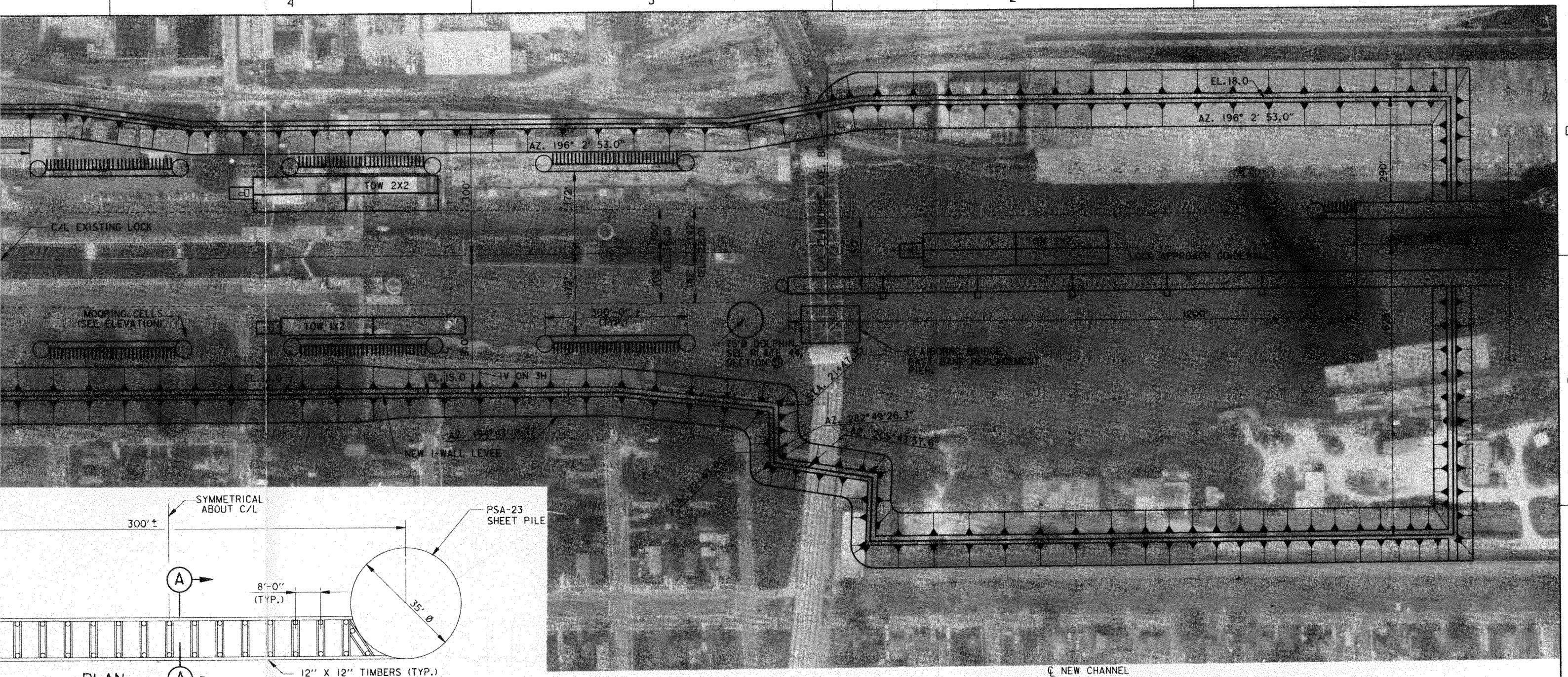

PLAN

SCALE: 1/16" = 1'-0"

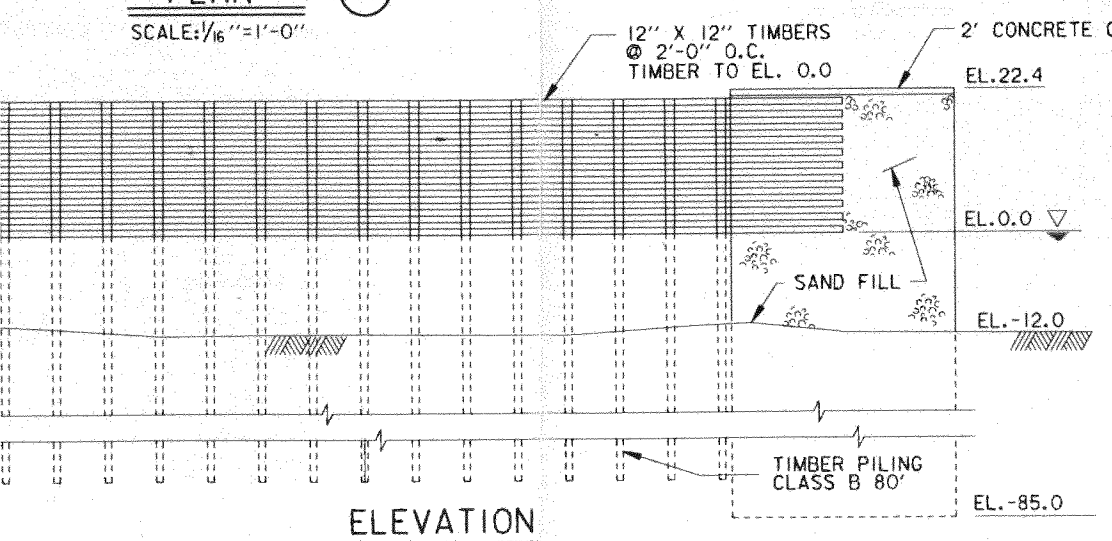

ELEVATION

SCALE: 1/16" = 1'-0"

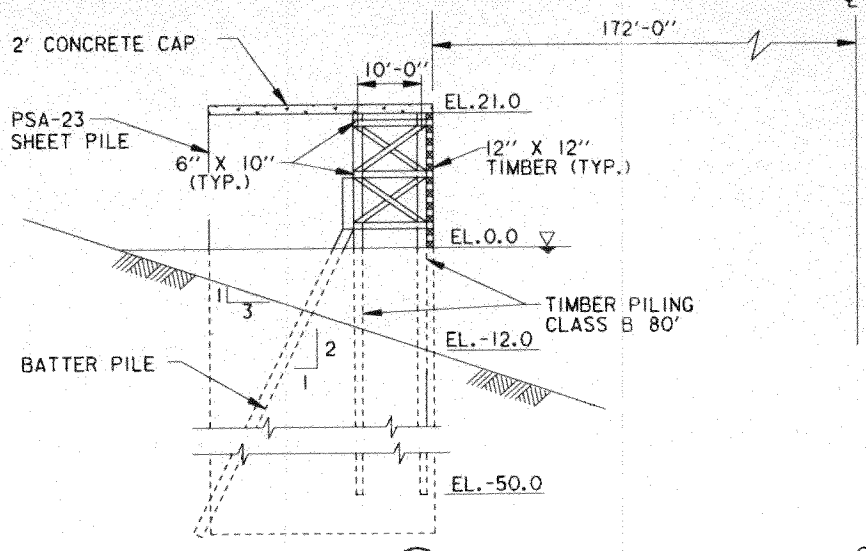

SECTION (A)

SCALE: 1/16" = 1'-0"

SCALE: 1" = 100'

100' 0 100' 200' 300' 400'

MISSISSIPPI RIVER - GULF OUTLET
NEW LOCK AND CONNECTING CHANNELS
(INDUSTRIAL CANAL LOCK REPLACEMENT)
FEASIBILITY STUDY
NORTH OF CLAIBORNE AVE.

PERMANENT MOORING DETAILS 1200' SHIP LOCK

U.S. ARMY ENGINEER DISTRICT, NEW ORLEANS
CORPS OF ENGINEERS
NEW ORLEANS, LOUISIANA

DESIGNED BY: MHG	PLOT SCALE: 1200	PLOT DATE: X	CADD FILE: TWFSMOOR.DGN	
DRAWN BY: HAT			FILE NO. H-2-40392	
CHECKED BY: ADS	DATE: NOVEMBER 1994			

5 4 3 2

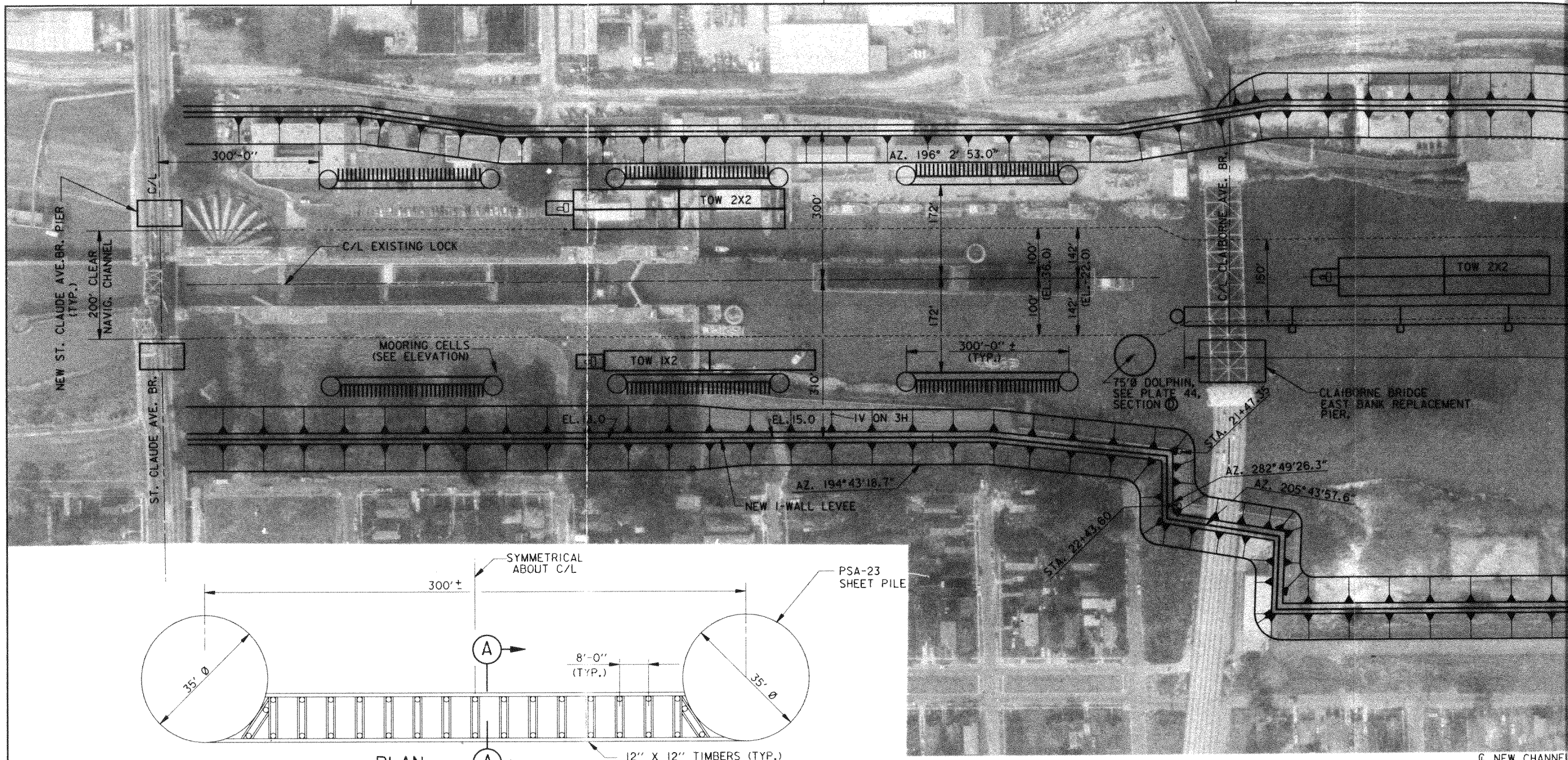

PLAN

SCALE: 1/16"=1'-0"

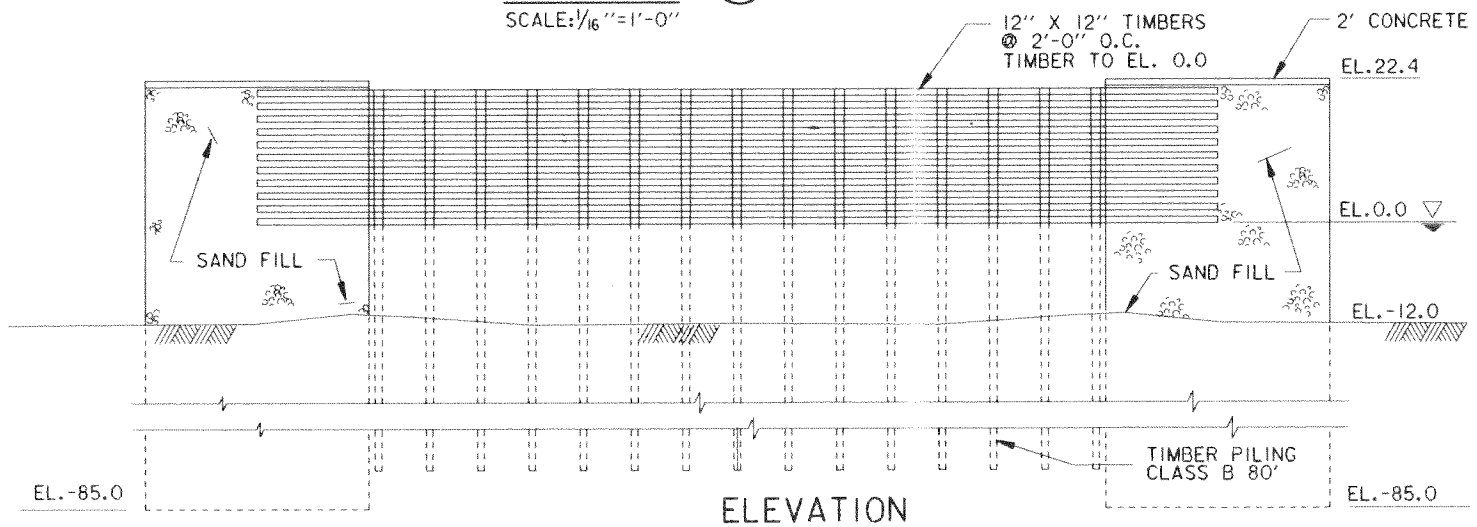

ELEVATION

SCALE: 1/16"=1'-0"

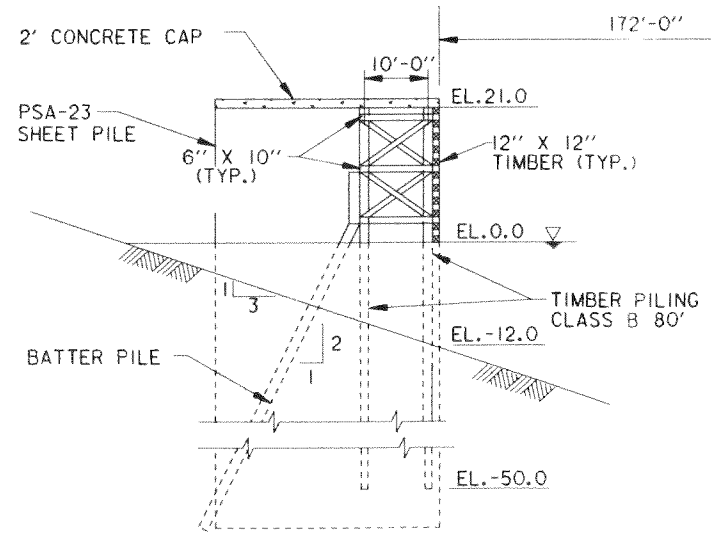

SECTION (A)

SCALE: 1/16"=1'-0"

℄ NEW CHANNEL

SCALE: 1" =

100' 0 100'

E DONE IN THE WET.
E DETOURED THROUGH
CATED ON THE EAST

G LOCK SHALL BE
IRETY.
N OF THE EXISTING
RED. LOCK WALLS
. -30.0.

DEMOLITION DIRECTION

REMOVE EAST & WEST BRIDGE PIERS SECTION
REMOVE LIGHT SECTION & EMERG. DAM.
REMOVE SOUTH GATE DIVISION (SOUTH HALF)
REMOVE SOUTH GATE DIVISION (NORTH HALF)
REMOVE CENTER STRETCH - SOUTH THIRD
REMOVE CENTER STRETCH - MIDDLE THIRD
REMOVE CENTER STRETCH - NORTH THIRD
REMOVE LOCKMASTER'S OFFICE AS REQUIRED FOR REASSEMBLY OFFSITE

EL. + 22.5 NGVD
EL. (-) 32.5
EL. + 9.5
Culvert Openings
Vent
Pump Suction

EL. (-) 36.5
EL. (-) 41.0
EL. (-) 41.5
EL. (-) 42.5
EL. (-) 44.5
EL. (-) 41.5

STEP ONE- REMOVE ST. CLAUDE BRIDGE COLUMNS AND RETAINING WALLS. SEE PLATE 51

LONGITUDINAL SECTION AT ℄ OF LOCK

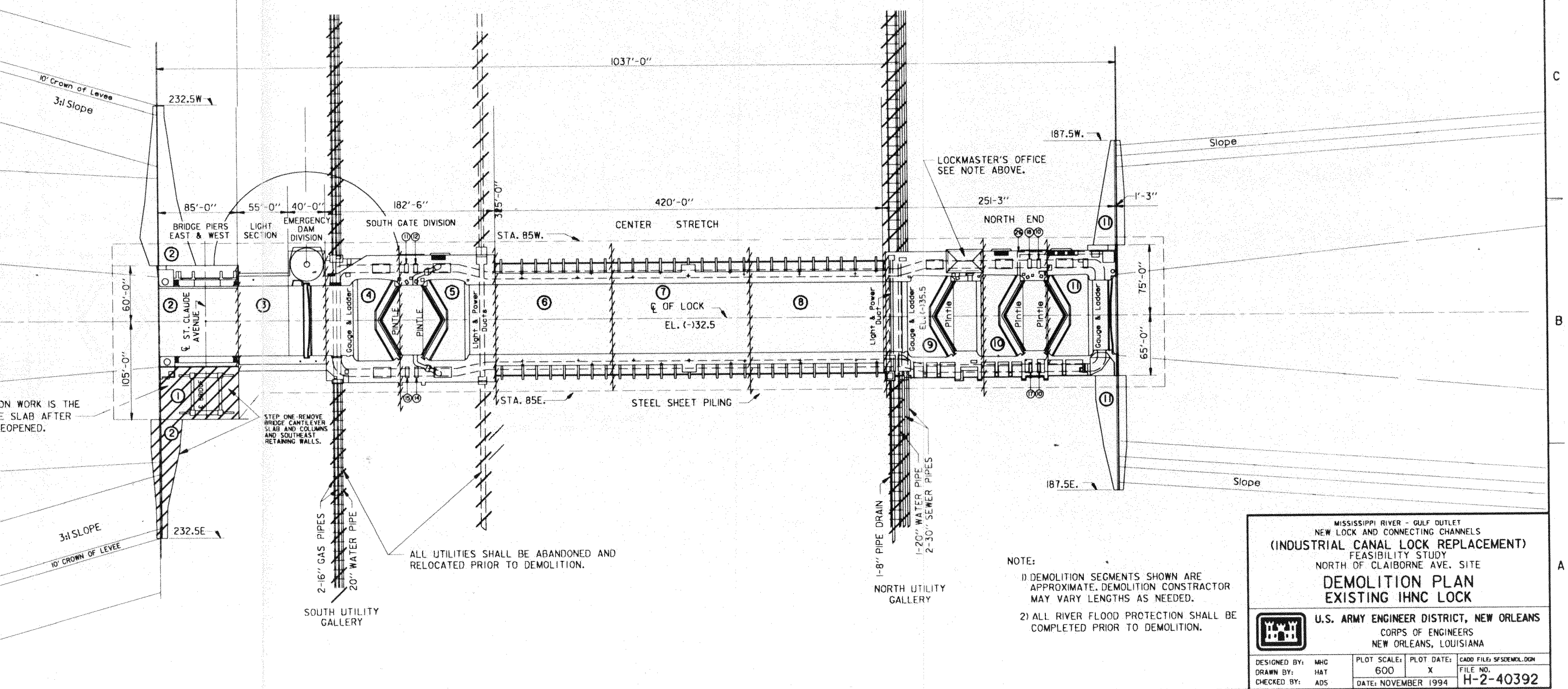

ON WORK IS THE
E SLAB AFTER
EOPENED.

NOTE:

1) DEMOLITION SEGMENTS SHOWN ARE APPROXIMATE. DEMOLITION CONSTRACTOR MAY VARY LENGTHS AS NEEDED.

2) ALL RIVER FLOOD PROTECTION SHALL BE COMPLETED PRIOR TO DEMOLITION.

MISSISSIPPI RIVER - GULF OUTLET
NEW LOCK AND CONNECTING CHANNELS
(INDUSTRIAL CANAL LOCK REPLACEMENT)
FEASIBILITY STUDY
NORTH OF CLAIBORNE AVE. SITE

DEMOLITION PLAN EXISTING IHNC LOCK

U.S. ARMY ENGINEER DISTRICT, NEW ORLEANS
CORPS OF ENGINEERS
NEW ORLEANS, LOUISIANA

DESIGNED BY: MHG	PLOT SCALE: 600	PLOT DATE: X	CADD FILE: SFSDEMOL.DGN	
DRAWN BY: HAT			FILE NO. H-2-40392	
CHECKED BY: ADS	DATE: NOVEMBER 1994			

5 4 3 2

NOTES

1) ALL DEMOLITION SHALL BE DONE IN THE WET. MARINE TRAFFIC SHALL BE DETOURED THROUGH AN 85' WIDE CHANNEL LOCATED ON THE EAST BANK (SEE PLATE 50).

2) SHIP LOCK: THE EXISTING LOCK SHALL BE DEMOLIOSHED IN IT'S ENTIRETY.

3) BARGE LOCK: DEMOLITION OF THE EXISTING LOCK SLAB IS NOT REQUIRED. LOCK WALLS SHALL BE REMOVED TO EL. -30.0.

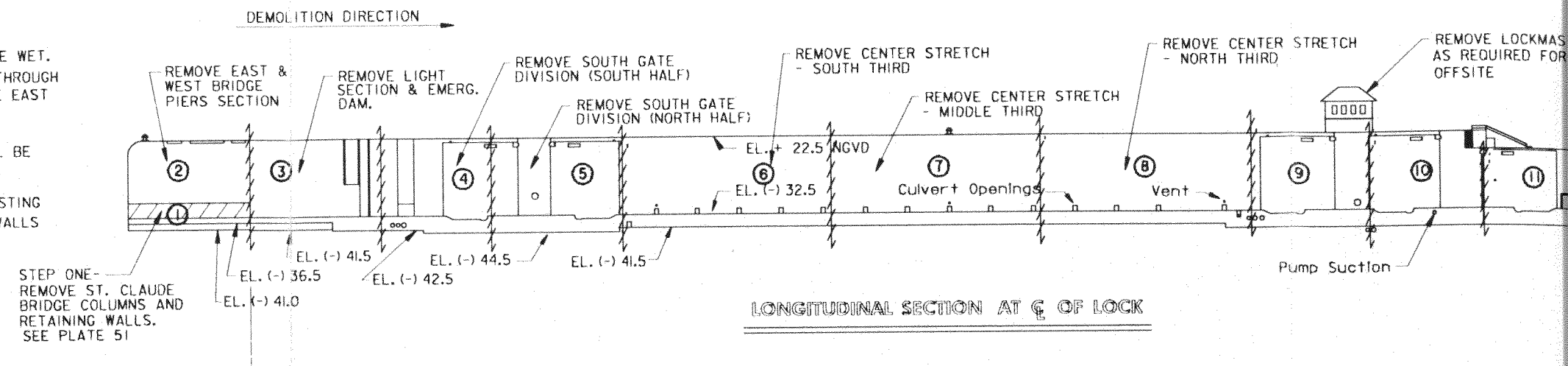

LONGITUDINAL SECTION AT ℄ OF LOCK

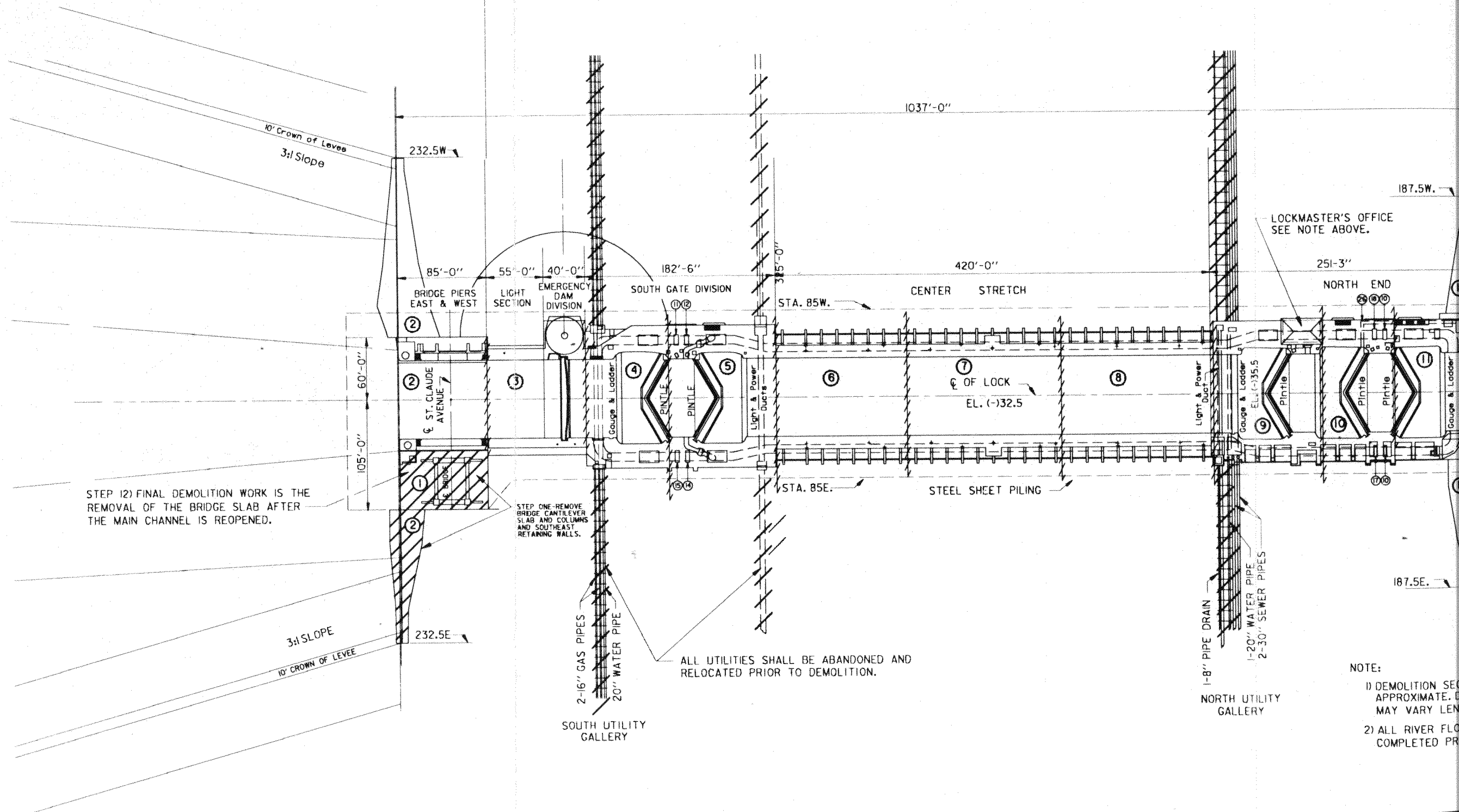

NOTE:

1) DEMOLITION SE APPROXIMATE. MAY VARY LEN

2) ALL RIVER FLO COMPLETED PR

DEMOLITION BYPASS CHANNEL SEQUENCE

1) PHASE I. DEMOLISH AND REMOVE THE ST. CLAUDE BRIDE, SUPPORTS AND RETAINING WALLS AS IS REQUIRED TO OPEN THE BYPASS CHANNEL. THE EXTENT OF REMOVAL IS SHOWN ON PLATE 51.

2) PHASE II CONCURRENT WITH BRIDGE DEMOLITION, DREDGE THE CHANNEL SECTION WITHIN THE LIMITS OF THE BYPASS CHANNEL. DREDGING SHALL EXTENT UP TO THE WALL OF THE EXISTING LOCK.

3) PHASE III ONCE THE ST. CLAUDE BRIDGE DEMOLITION IS COMPLETE AND ALL DEBRIS REMOVED, CONTINUE DREDGING THE BYPASS CHANNEL SOUTHWARD. OPEN THE BYPASS CHANNEL TO MARINE TRAFFIC, CLOSE THE EXISTING LOCK AND COMMENCE LOCK DEMOLITION.

4) THE AVAILABLE AREA IS INADEQUATE TO PERMIT THE BYPASS CHANNEL AND CONSTRUCTION OF THE NEW ST. CLAUDE BRIDE EAST PIER. THE EAST PIER CONSTRUCTION MUST BE DELAYED UNTIL THE NEW CHANNEL IS OPEN.

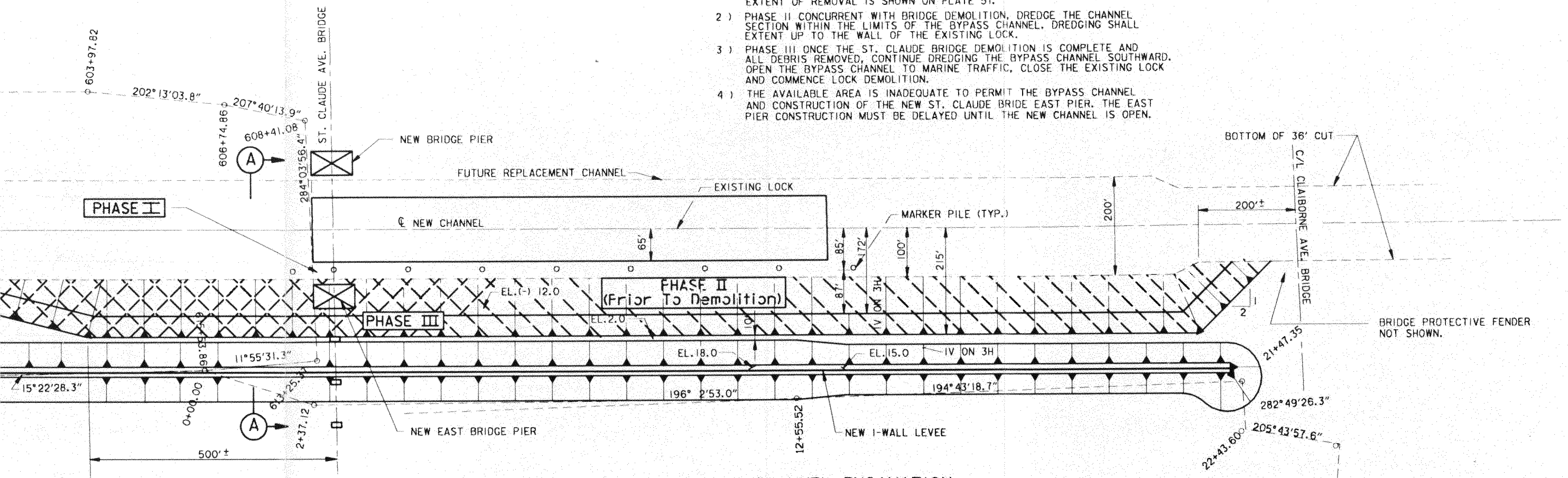

BYPASS CHANNEL EXCAVATION

PLAN

SCALE: 1"=100'

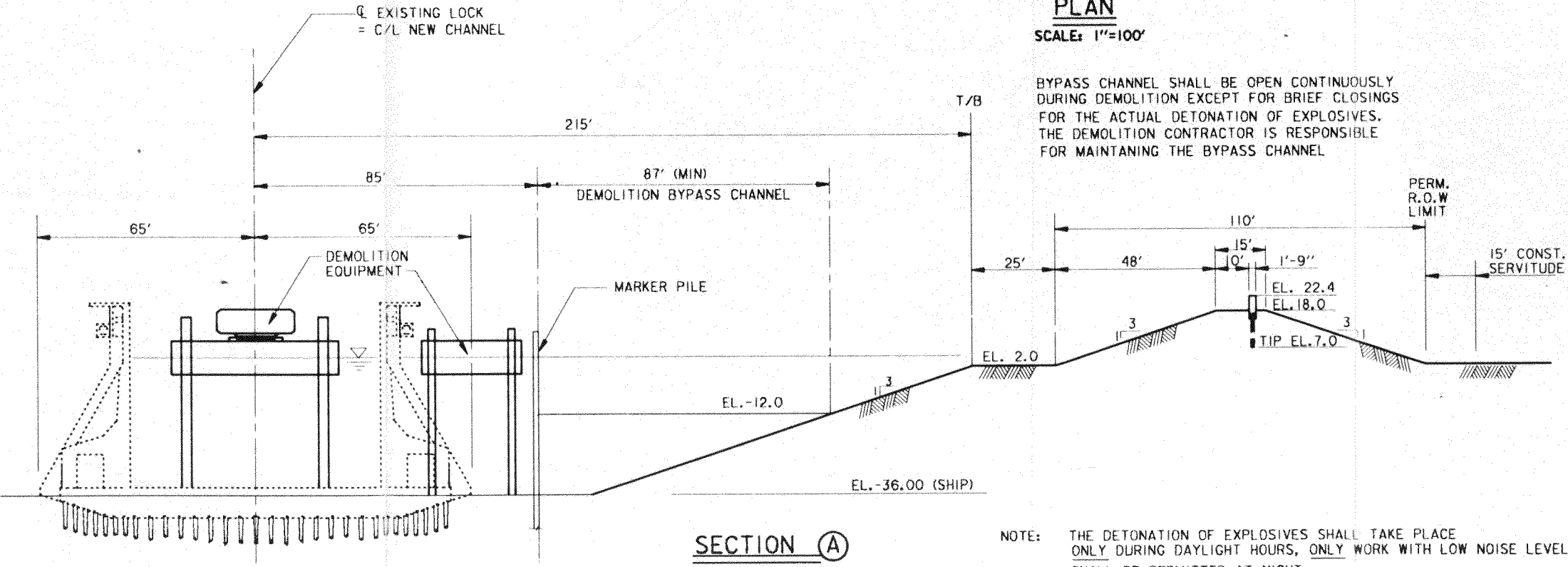

SECTION (A)

SCALE: 1"=20'

NOTE: THE DETONATION OF EXPLOSIVES SHALL TAKE PLACE ONLY DURING DAYLIGHT HOURS, ONLY WORK WITH LOW NOISE LEVELS SHALL BE PERMITTED AT NIGHT.

WATER STAGE	*BYPASS CHANNEL MIN. BOTTOM WIDTH	** SIDE CLEARANCE FOR BARGE DOUBLE TOW
EL. 0.0	87'	8.5'
EL. 3.0	96'	13.0'
EL. 5.0	102'	16.0'
EL. 10.0	117'	23.5'

* BASED ON 9' BARGE DRAFT PLUS 3' BOTTOM CLEARANCE

** DOUBLE BARGE WIDTH CONSIDERED TO BE 70', CLEARANCE EQUAL ON EACH SIDE.

NOTE: DOUBLE TOWS PERMITTED WHEN WATER STAGE EXCEEDS EL. 3.0

MISSISSIPPI RIVER - GULF OUTLET
NEW LOCK AND CONNECTING CHANNELS
(INDUSTRIAL CANAL LOCK REPLACEMENT)
FEASIBILITY STUDY
NORTH OF CLAIBORNE AVE. SITE

DEMOLITION BYPASS CHANNEL PLAN

U.S. ARMY ENGINEER DISTRICT, NEW ORLEANS
CORPS OF ENGINEERS
NEW ORLEANS, LOUISIANA

DESIGNED BY: MHG	PLOT SCALE: 1200	PLOT DATE: X	CADD FILE: FSDMBYPL.DGN	
DRAWN BY: HAT			FILE NO. H-2-40392	
CHECKED BY: ADS	DATE: NOVEMBER 1994			

PLATE B-50

DEMOLITION BYPASS CHANNEL SEQUENCE

1) PHASE I. DEMOLISH AND REMOVE THE ST. CLAUDE BRIDE, SUPPORTS AND RETAINING WALLS AS IS REQUIRED TO OPEN THE BYPASS CHANNEL. THE EXTENT OF REMOVAL IS SHOWN ON PLATE 51.

2) PHASE II CONCURRENT WITH BRIDGE DEMOLITION, DREDGE THE CHANNEL SECTION WITHIN THE LIMITS OF THE BYPASS CHANNEL. DREDGING SHALL EXTENT UP TO THE WALL OF THE EXISTING LOCK.

3) PHASE III ONCE THE ST. CLAUDE BRIDGE DEMOLITION IS COMPLETE AND ALL DEBRIS REMOVED, CONTINUE DREDGING THE BYPASS CHANNEL SOUTHWARD. OPEN THE BYPASS CHANNEL TO MARINE TRAFFIC, CLOSE THE EXISTING LOCK AND COMMENCE LOCK DEMOLITION.

4) THE AVAILABLE AREA IS INADEQUATE TO PERMIT THE BYPASS CHANNEL AND CONSTRUCTION OF THE NEW ST. CLAUDE BRIDE EAST PIER. THE EAST PIER CONSTRUCTION MUST BE DELAYED UNTIL THE NEW CHANNEL IS OPEN.

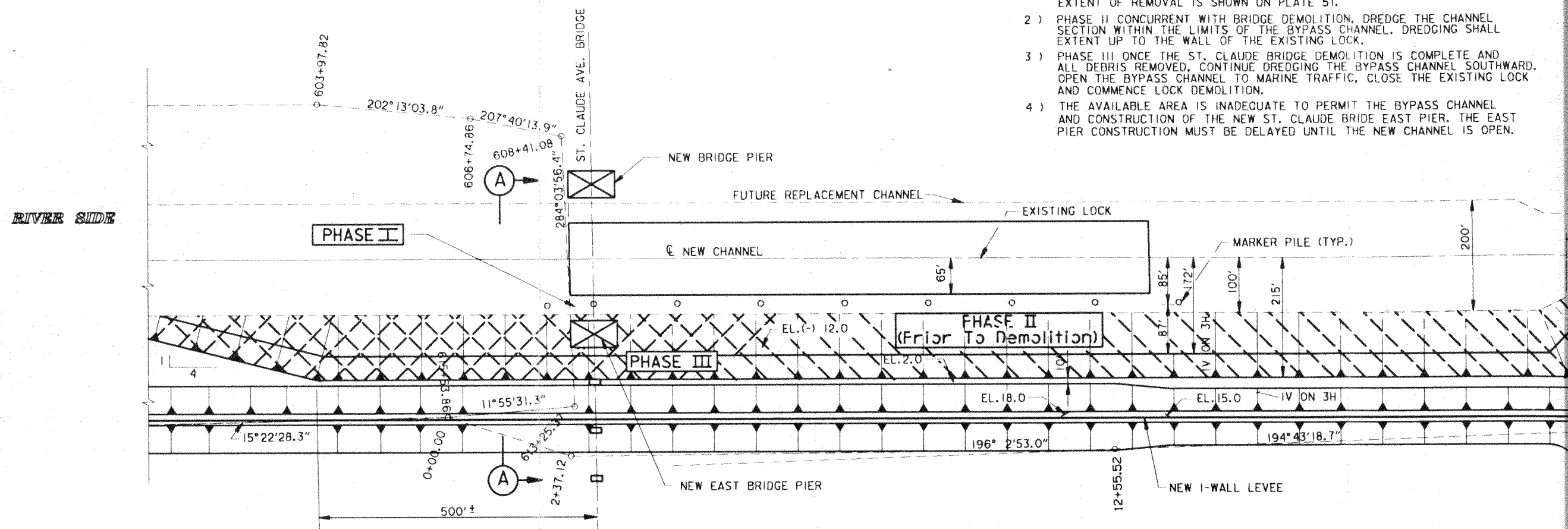

BYPASS CHANNEL EXCAVATION

PLAN

SCALE: 1"=100'

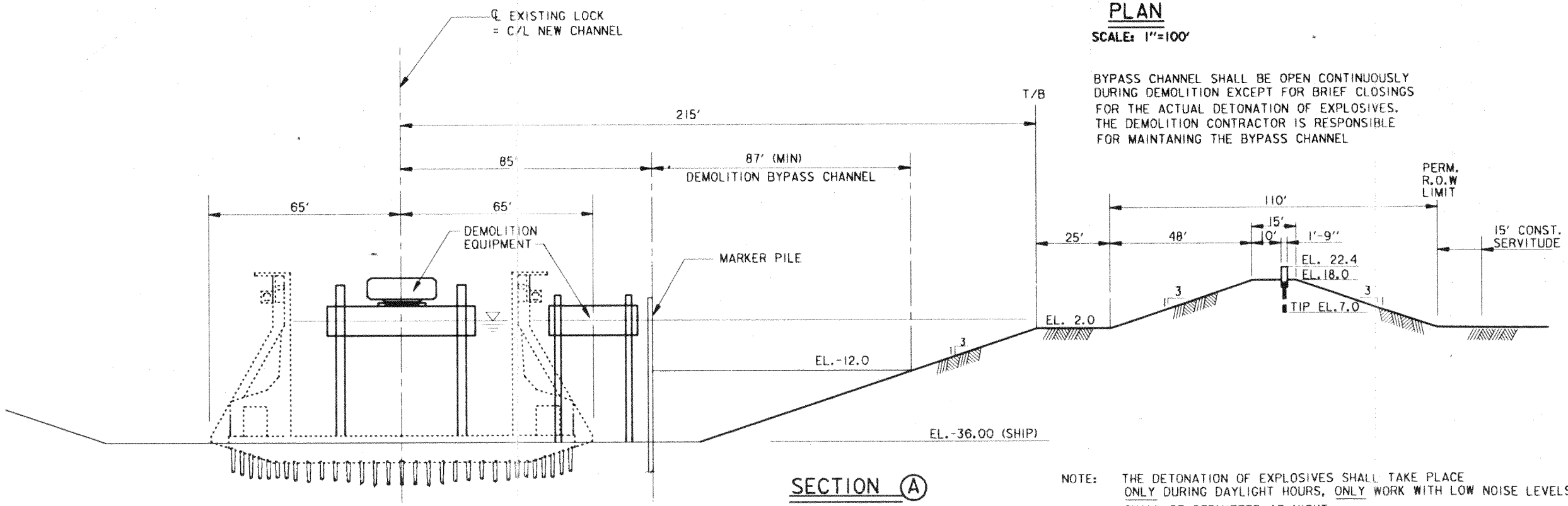

SECTION (A)

SCALE: 1"=20'

NOTE: THE DETONATION OF EXPLOSIVES SHALL TAKE PLACE ONLY DURING DAYLIGHT HOURS, ONLY WORK WITH LOW NOISE LEVELS SHALL BE PERMITTED AT NIGHT.

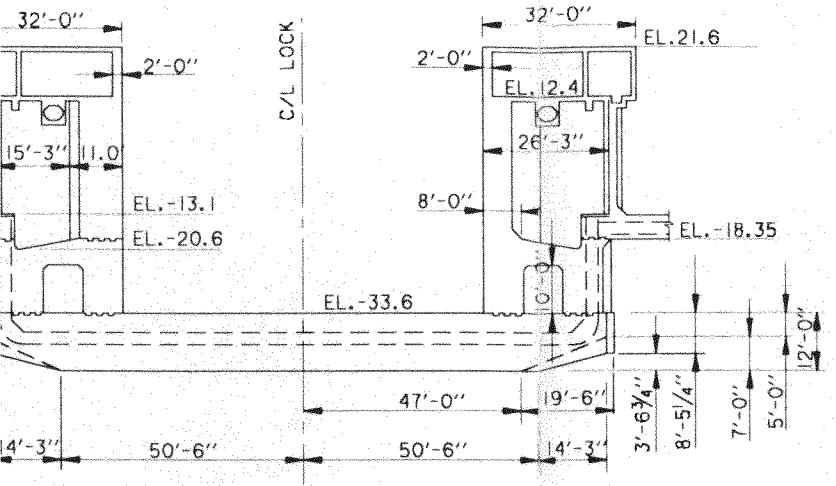

GATE BAY SECTION

SCALE: 1"=20'

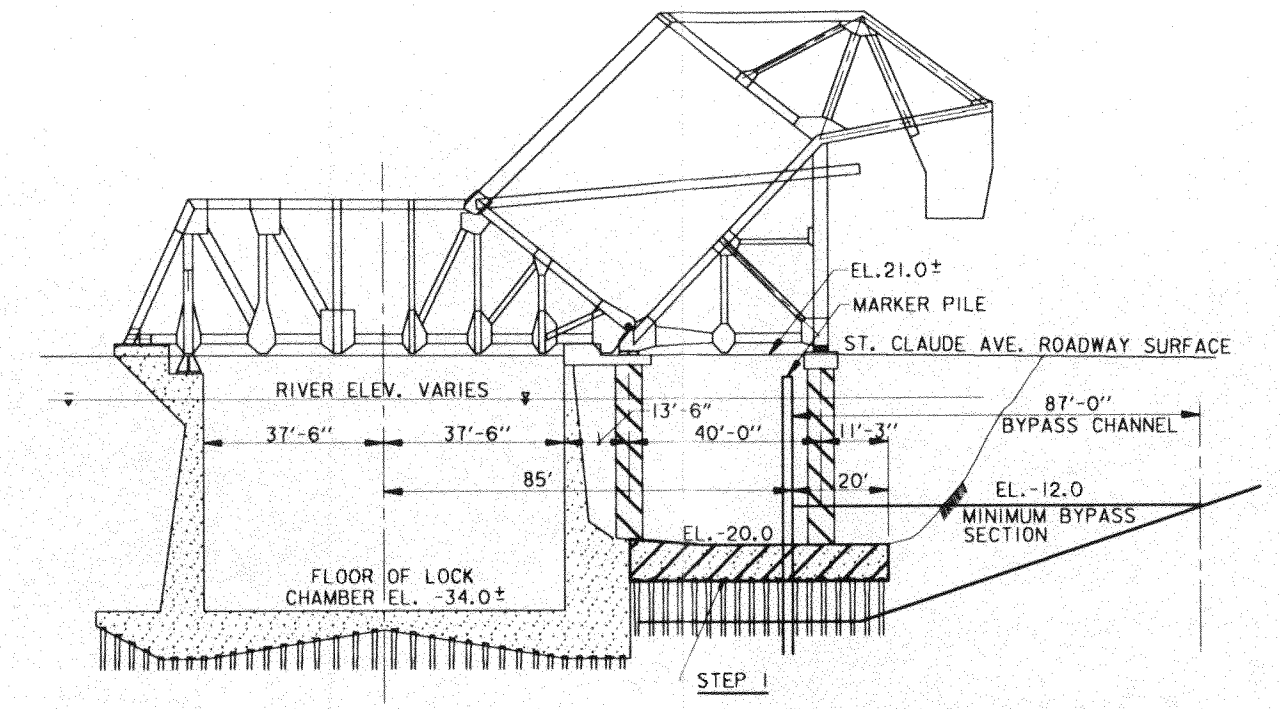

ST. CLAUDE BRIDGE SECTION

SCALE: 1"=20'

REMOVE BRIDGE COLUMNS AND RETAINING WALLS TO ELEV. -20.0 TO PERMIT BYPASS CHANNEL OPENING. THE REMAINING SLAB AND RETAINING WALLS BELOW ELEV. -20.0 SHALL BE DEMOLISHED AND REMOVED AFTER THE MAIN CHANNEL IS REOPENED. THIS SHALL BE THE LAST SEGMENT OF DEMOLITION WORK.

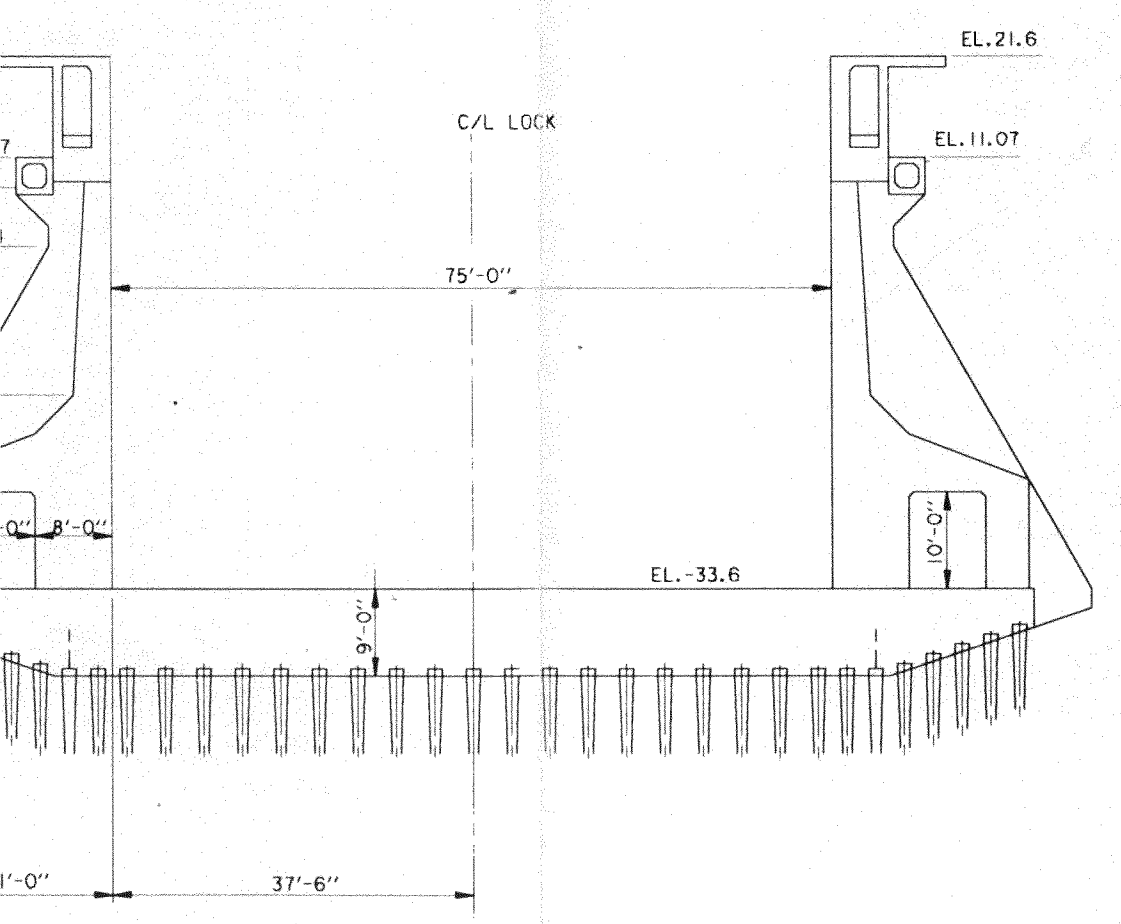

LOCK CHAMBER SECTION

SCALE: 1"=20'

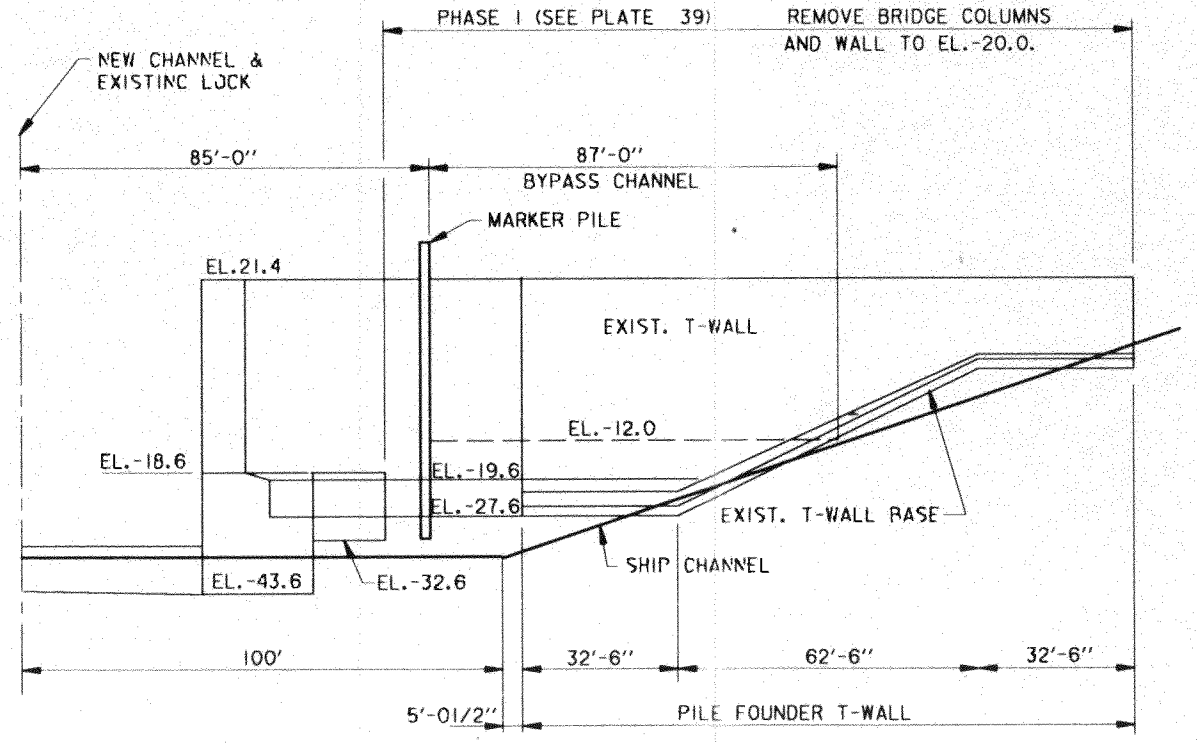

SOUTHEAST BRIDGE SECTION

MISSISSIPPI RIVER - GULF OUTLET
NEW LOCK AND CONNECTING CHANNEL
(INDUSTRIAL CANAL LOCK REPLACEMENT)
FEASIBILITY STUDY
NORTH OF CLAIBORNE AVE. SITE

DEMOLITION
TYPICAL LOCK SECTIONS

U.S. ARMY ENGINEER DISTRICT, NEW ORLEANS
CORPS OF ENGINEERS
NEW ORLEANS, LOUISIANA

DESIGNED BY: MHC	PLOT SCALE: 240	PLOT DATE: X	CADD FILE: STSDEBRI.DGN	
DRAWN BY: HAT			FILE NO. H-2-40392	
CHECKED BY: ADS	DATE: NOVEMBER 1994			

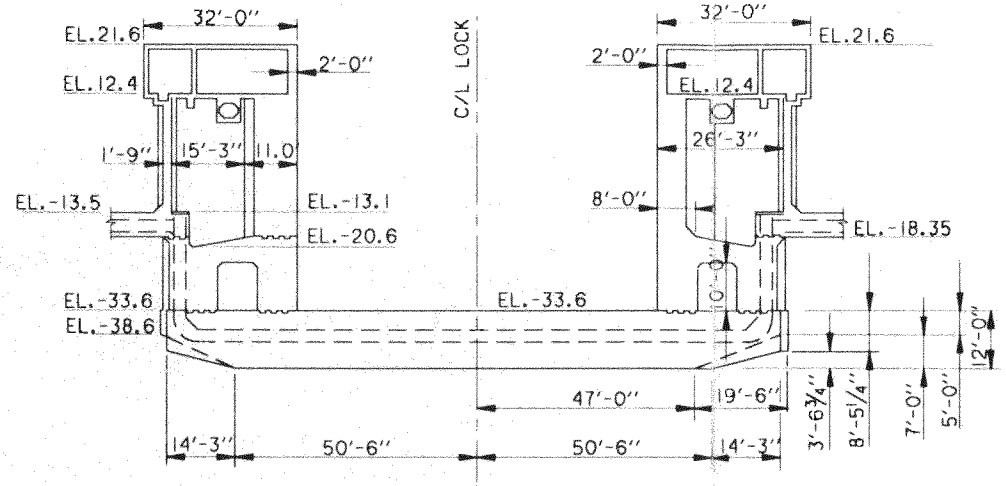

GATE BAY SECTION

SCALE: 1"=20'

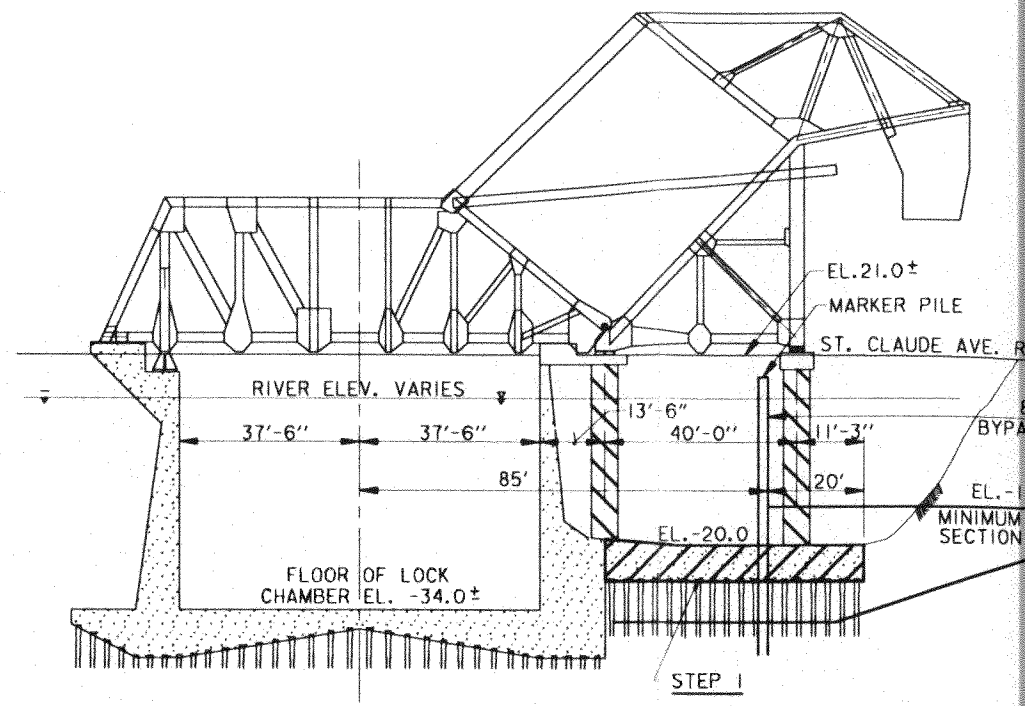

ST. CLAUDE BRIDGE SECTION

SCALE: 1"=20'

REMOVE BRIDGE COLUMNS AND RE
ELEV. -20.0 TO PERMIT BYPASS
THE REMAINING SLAB AND RETAIN
ELEV. -20.0 SHALL BE DEMOLISH
THE MAIN CHANNEL IS REOPENED.
LAST SEGMENT OF DEMOLITION W

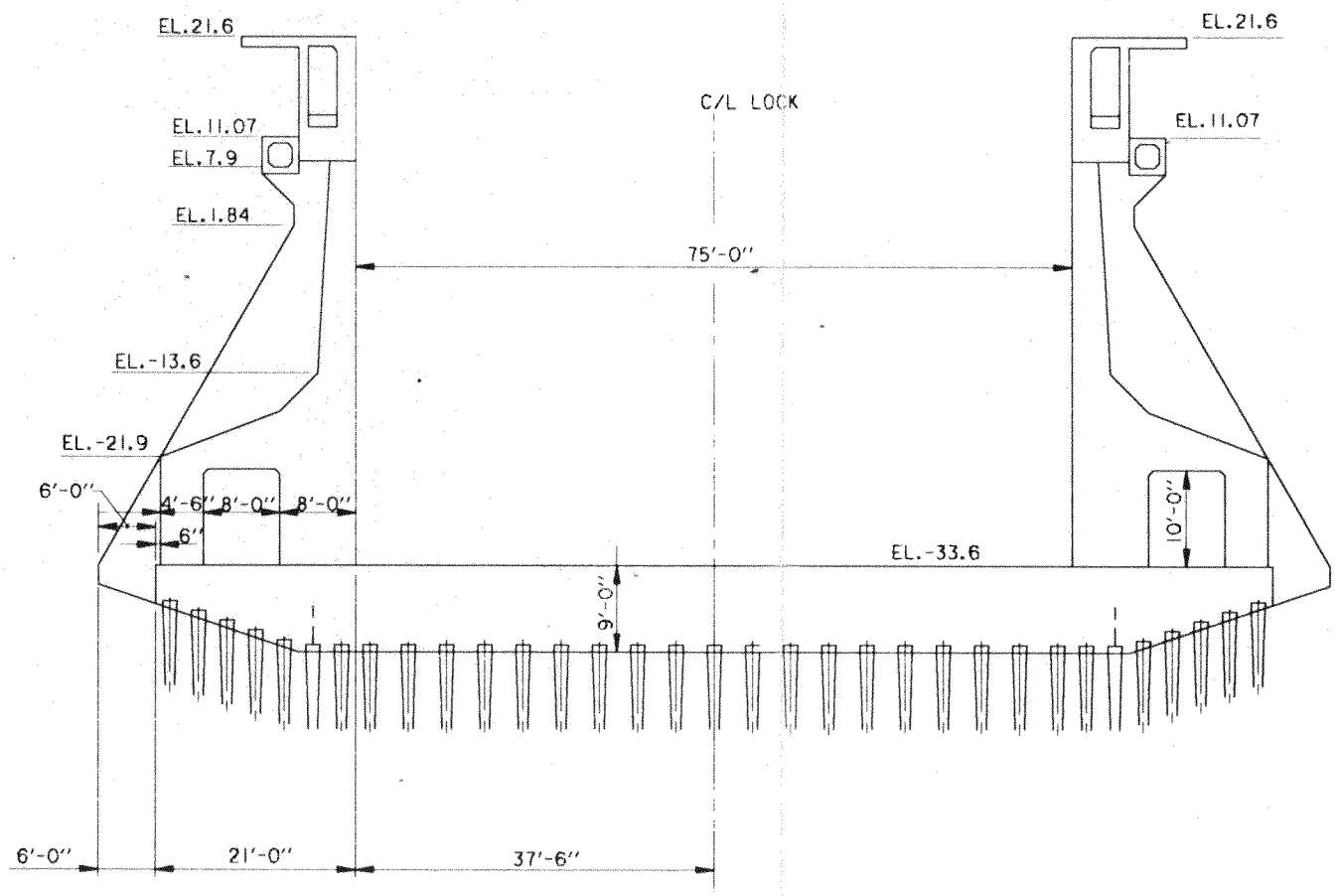

LOCK CHAMBER SECTION

SCALE: 1"=20'

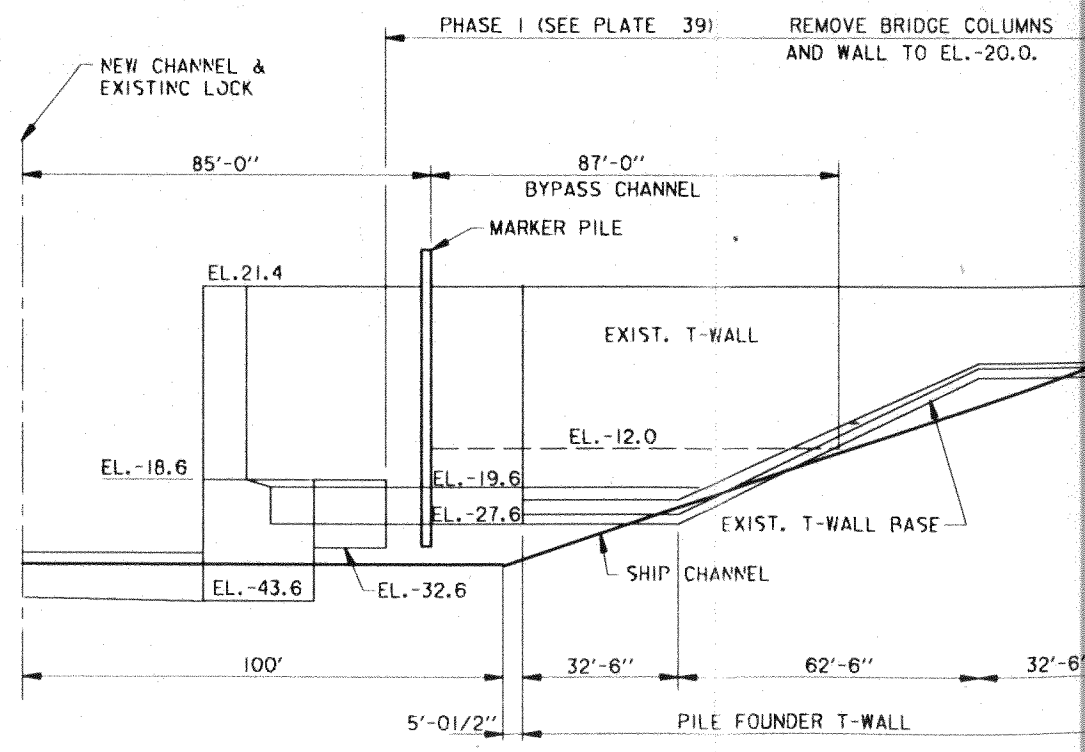

SOUTHEAST BRIDGE SECTION

EQUIPMENT BUILDING

EAST SIDE
HYDRAULIC PUMP FOR MITER GATES AND TAINTER VALVES

WEST SIDE
HYDRAULIC PUMP FOR MITER GATES AND TAINTER VALVES

VALVE
CROSS OVER

MITER GATE CYLINDER

MITER GATE CYLINDER

TAINTER VALVE CYLINDER

WEST SIDE

TAINTER VALVE CYLINDER

MITER GATE CYLINDER

MITER GATE CYLINDER

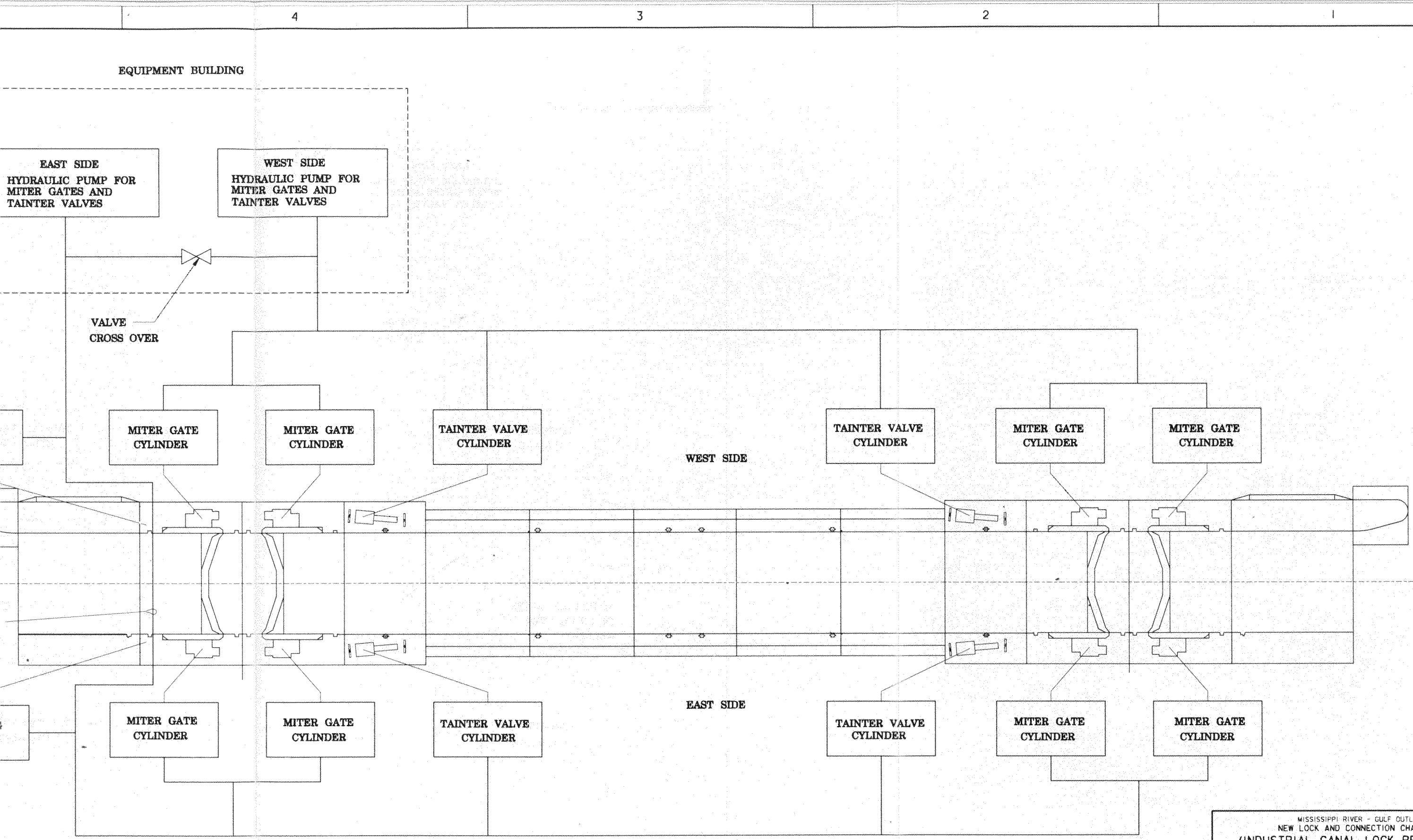

MITER GATE CYLINDER

MITER GATE CYLINDER

TAINTER VALVE CYLINDER

EAST SIDE

TAINTER VALVE CYLINDER

MITER GATE CYLINDER

MITER GATE CYLINDER

HYDRAULIC SCHEMATIC

N.T.S.

C•A•D

MISSISSIPPI RIVER - GULF OUTLET
NEW LOCK AND CONNECTION CHANNELS
(INDUSTRIAL CANAL LOCK REPLACEMEN)
FEASIBILITY STUDY
NORTH OF CLAIBORNE AVE. SITE

HYDRAULIC SYSTEM
1200'/900' SHIP/BARGE LOCK

U.S. ARMY ENGINEER DISTRICT, NEW ORLEANS
CORPS OF ENGINEERS
NEW ORLEANS, LOUISIANA

DESIGNED BY:	D.C.S.	PLOT SCALE:	PLOT DATE:	CADD FILE: IHNC_HYD.DGN
DRAWN BY:	G.P.W.	64	NOV. 1994	FILE NO. H-2-40392
CHECKED BY:	D.C.S.	DATE: NOV. 1994		

PLATE **B-52**

Safety is a Part of Your Contract

EQUIPMENT BUILDING

EAST SIDE
HYDRAULIC PUMP FOR MITER GATES AND TAINTER VALVES

WEST SIDE
HYDRAULIC PUMP FOR MITER GATES AND TAINTER VALVES

VALVE CROSS OVER

LOWERING CARRIAGE

MITER GATE CYLINDER

MITER GATE CYLINDER

TAINTER VALVE CYLINDER

WEST SIDE

TAINTER VALVE CYLINDER

MITER GAT CYLINDE

HYDRAULIC LINES IN CROSS OVER GALLERY

LOWERING CARRIAGE

MITER GATE CYLINDER

MITER GATE CYLINDER

TAINTER VALVE CYLINDER

EAST SIDE

TAINTER VALVE CYLINDER

MITER GAT CYLINDE

HYDRAULIC SCHEMATIC

N.T.S.

VALUE ENGINEERING INCENTIVE CLAUSES YOUR KEY TO HIGHER PROFITS

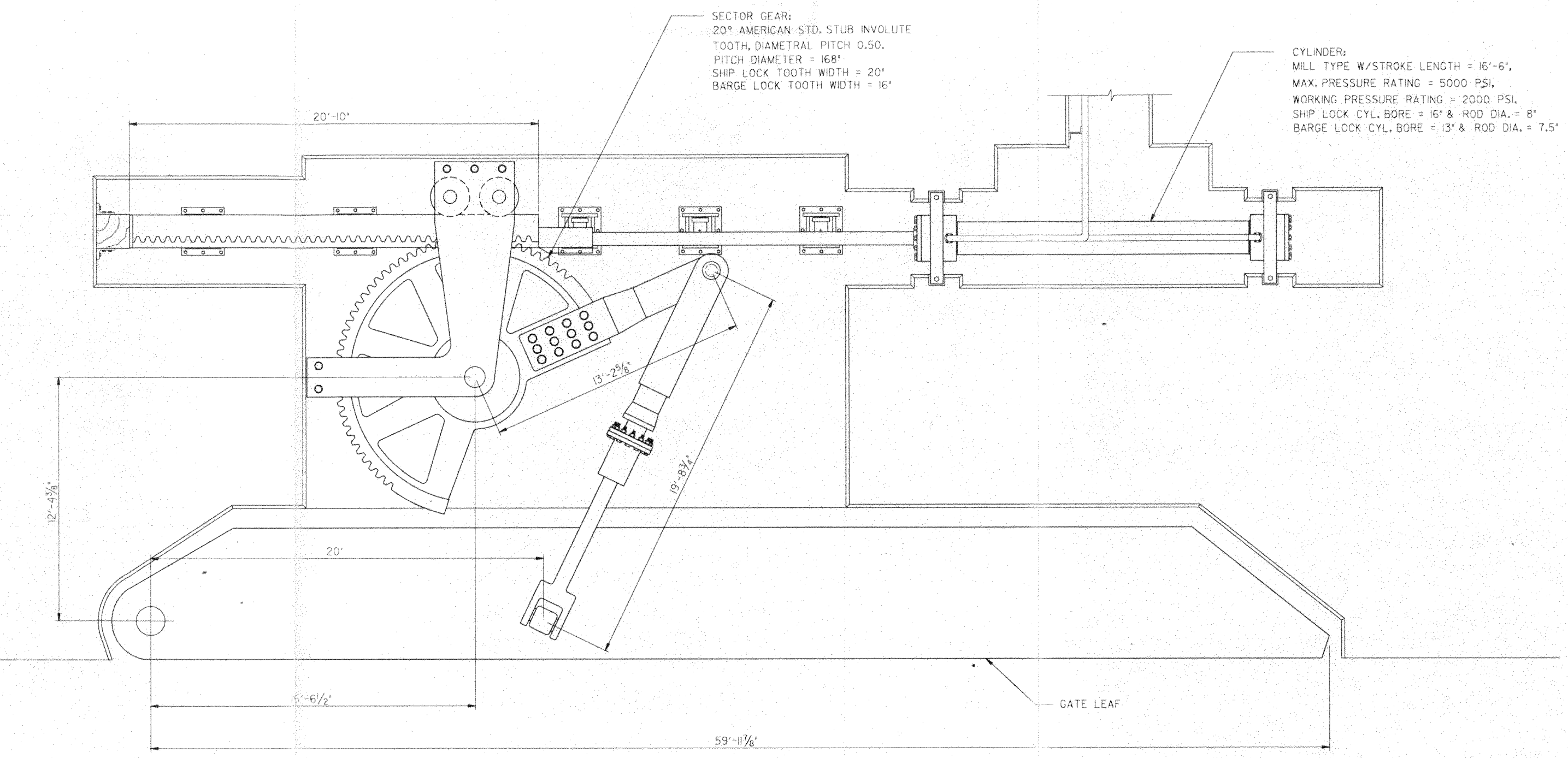

MITER GATE MACHINERY PLAN

SCALE: 3/8" = 1'- 0" NO. REQ'D. = 8

NOTE:
THE INFORMATION CONTAINED HEREIN
IS PRELIMINARY AND IS PRESENTED
MERELY FOR COST ESTIMATING PURPOSES.

MISSISSIPPI RIVER - GULF OUTLET
NEW LOCK AND CONNECTION CHANNELS
(INDUSTRIAL CANAL LOCK REPLACEMENT)
FEASIBILITY STUDY
NORTH OF CLAIBORNE AVE. SITE

MITER GATE MACHINERY
1200' SHIP/BARGE LOCK

U.S. ARMY ENGINEER DISTRICT, NEW ORLEANS
CORPS OF ENGINEERS
NEW ORLEANS, LOUISIANA

DESIGNED BY:	D.C.S.	PLOT SCALE: 32	PLOT DATE: NOV. 1994	CADD FILE: IHNC_GAT.DGN
DRAWN BY:	G.P.W.			FILE NO. H-2-40392
CHECKED BY:	D.C.S.	DATE: NOV. 1994		

Safety is a Part of Your Contract

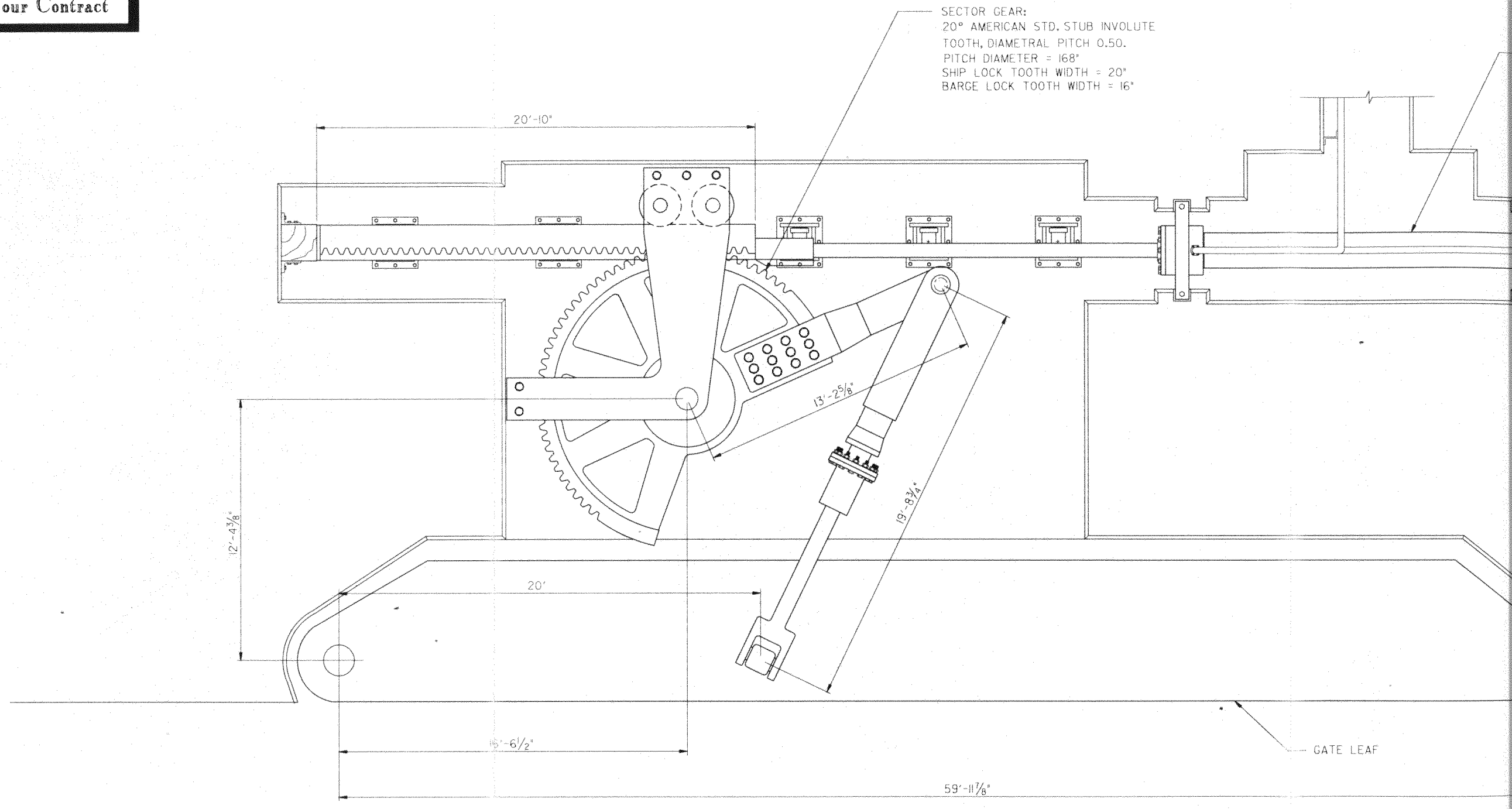

MITER GATE MACHINERY PLAN

SCALE: 3/8" = 1'- 0" NO. REQ'D. = 8

NOTE:
THE INFORMATION CONTAINED HERE
IS PRELIMINARY AND IS PRESENTE
MERELY FOR COST ESTIMATING PU

VALUE ENGINEERING INCENTIVE CLAUSES YOUR KEY TO HIGHER PROFITS

SHIP LOCK: PROTOTYPE SUBMERGENCE = 53.6'; PROTOTYPE OPERATING TIME = 2 MIN.
MODEL SUBMERGENCE = 2.68'

'CLE: RECESS TO MITER

GATE POSITION	% OF OF FULL OPEN	MODEL TORQUE LBS.-FT.	PROTOTYPE TORQUE KIP-FT.	STRUT FORCE KIPS	SECTOR GEAR TORQUE KIP-FT.	PISTON ROD FORCE KIPS
0	0	8.0	1280	110.86	0	0
1	2.5	9.0	1440	104.93	416.57	79.98
1a	10	8.5	1360	85.56	645.12	123.86
2	20	5.5	880	49.29	524.94	100.79
3	30	4.4	704	37.22	443.29	85.11
4	40	4.3	688	35.12	444.97	85.43
5	50	4.3	688	44.12	580.18	111.39
6	60	4.3	688	44.06	579.39	111.24
7	70	4.3	688	44.65	569.73	109.39
8	80	4.3	688	45.55	536.12	102.94
9	90	4.3	688	46.83	493.59	94.77
9a	97.5	12.0	1920	104.75	987.79	189.67
10	100	1.0	160	8.77	78.58	15.09

CLE: MITER TO RECESS

GATE POSITION	% OF OF FULL OPEN	MODEL TORQUE LBS.-FT.	PROTOTYPE TORQUE KIP-FT.	STRUT FORCE KIPS	SECTOR GEAR TORQUE KIP-FT.	PISTON ROD FORCE KIPS
0	0	1.0	160	13.86	0	0
1	2.5	3.5	560	40.80	161.98	31.10
1a	10	5.8	928	58.38	440.19	84.52
2	20	6.0	960	53.77	572.65	109.95
3	30	5.5	880	46.53	554.17	106.40
4	40	4.5	720	36.76	465.75	89.42
5	50	2.8	448	22.46	295.35	56.71
6	60	2.8	448	22.42	294.82	56.61
7	70	2.8	448	22.73	290.03	55.69
8	80	2.8	448	21.64	254.70	48.90
9	90	2.8	448	23.84	251.27	48.24
9a	97.5	2.2	352	19.20	181.06	34.76
10	100	2.2	352	19.28	172.75	33.17

MPORAL HYDRAULIC LOAD

GATE OSITION	% OF OF FULL OPEN	PROTOTYPE TORQUE KIP-FT.	STRUT FORCE KIPS	SECTOR GEAR TORQUE KIP-FT.	PISTON ROD FORCE KIPS
0	0	TEMPORAL HYDRAULIC LOAD 1.25 FT. HEAD DIFFERENCE TORQUE = 7383.5 KIP-FT.	639.48	0	0
1	2.5		538.02	2135.93	410.09
1a	10		464.51	3502.38	672.44
2	20		413.56	4404.43	845.66
3	30		390.36	4649.19	892.63
4	40		376.90	4775.34	916.82
5	50		462.73	6224.36	1195.41
6	60		462.10	6217.92	1193.81
7	70		468.29	6114.25	1173.96
8	80		488.83	5753.55	1104.73
9	90		502.57	5297.12	1017.06
9a	97.5		402.82	3798.62	729.39
10	100		404.71	3626.22	696.36

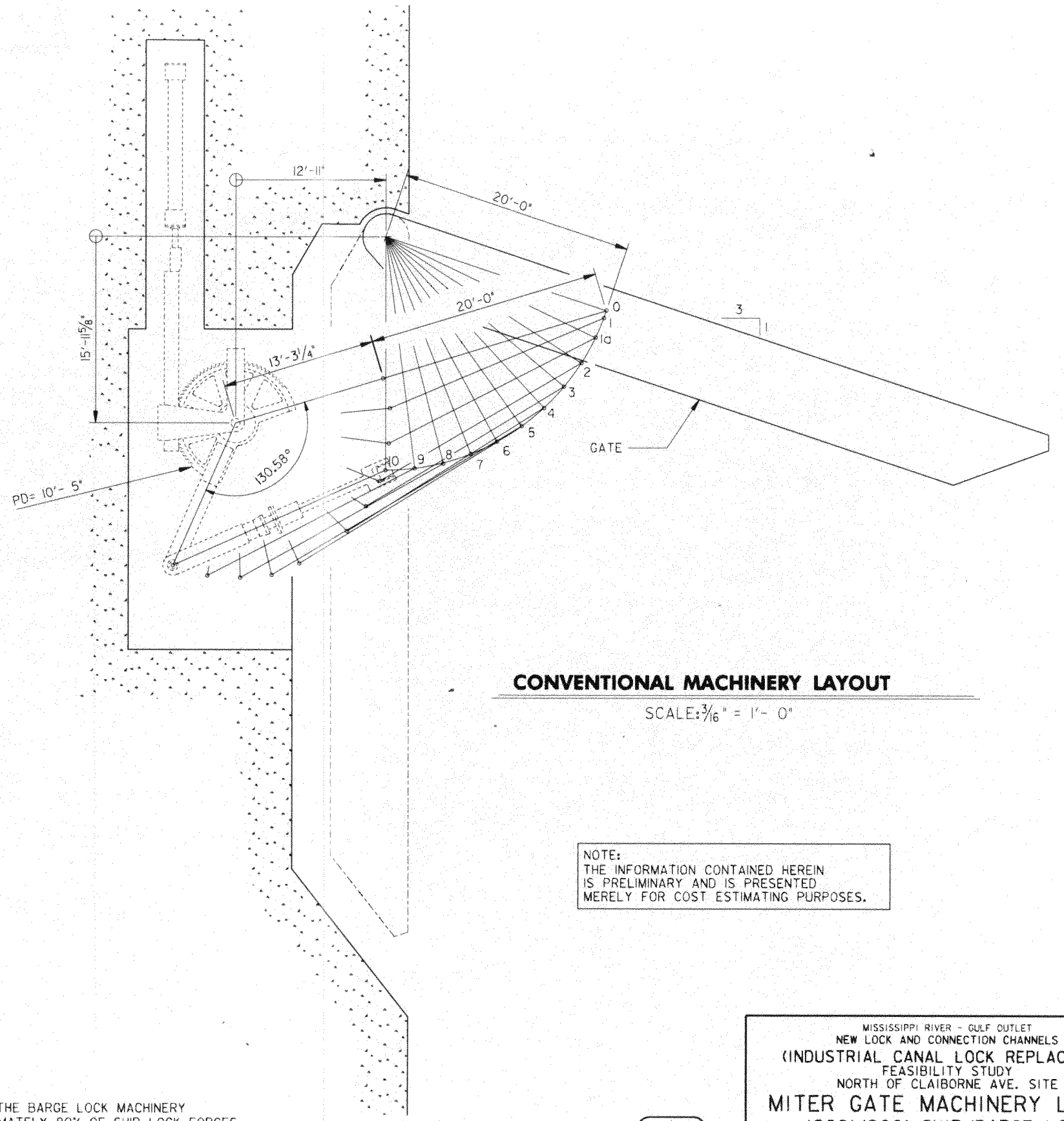

CONVENTIONAL MACHINERY LAYOUT

SCALE: 3/16" = 1'- 0"

NOTE:
THE INFORMATION CONTAINED HEREIN IS PRELIMINARY AND IS PRESENTED MERELY FOR COST ESTIMATING PURPOSES.

NOTE:
FORCES ON THE BARGE LOCK MACHINERY ARE APPROXIMATELY 80% OF SHIP LOCK FORCES.

MISSISSIPPI RIVER - GULF OUTLET
NEW LOCK AND CONNECTION CHANNELS
(INDUSTRIAL CANAL LOCK REPLACEMEN)
FEASIBILITY STUDY
NORTH OF CLAIBORNE AVE. SITE

MITER GATE MACHINERY LOADS
1200'/900' SHIP/BARGE LOCK

U.S. ARMY ENGINEER DISTRICT, NEW ORLEANS
CORPS OF ENGINEERS
NEW ORLEANS, LOUISIANA

DESIGNED BY: D.C.S.	PLOT SCALE: 64	PLOT DATE: NOV. 1994	CADD FILE: IHNCTAB1.DGN	
DRAWN BY: G.P.W.			FILE NO. H-2-40392	
CHECKED BY: D.C.S.	DATE: NOV. 1994			

PLATE B-54

Safety is a Part of Your Contract

SHIP LOCK: PROTOTYPE SUBMERGENCE = 53.6'; PROTOTYPE OPERATING TIME = 2 MIN.
MODEL SUBMERGENCE = 2.68'

CYCLE: RECESS TO MITER

GATE POSITION	% OF OF FULL OPEN	MODEL TORQUE LBS.-FT.	PROTOTYPE TORQUE KIP-FT.	STRUT FORCE KIPS	SECTOR GEAR TORQUE KIP-FT.	PISTON ROD FORCE KIPS
0	0	8.0	1280	110.86	0	0
1	2.5	9.0	1440	104.93	416.57	79.98
1a	10	8.5	1360	85.56	645.12	123.86
2	20	5.5	880	49.29	524.94	100.79
3	30	4.4	704	37.22	443.29	85.11
4	40	4.3	688	35.12	444.97	85.43
5	50	4.3	688	44.12	580.18	111.39
6	60	4.3	688	44.06	579.39	111.24
7	70	4.3	688	44.65	569.73	109.39
8	80	4.3	688	45.55	536.12	102.94
9	90	4.3	688	46.83	493.59	94.77
9a	97.5	12.0	1920	104.75	987.79	189.67
10	100	1.0	160	8.77	78.58	15.09

CYCLE: MITER TO RECESS

GATE POSITION	% OF OF FULL OPEN	MODEL TORQUE LBS.-FT.	PROTOTYPE TORQUE KIP-FT.	STRUT FORCE KIPS	SECTOR GEAR TORQUE KIP-FT.	PISTON ROD FORCE KIPS
0	0	1.0	160	13.86	0	0
1	2.5	3.5	560	40.80	161.98	31.10
1a	10	5.8	928	58.38	440.19	84.52
2	20	6.0	960	53.77	572.65	109.95
3	30	5.5	880	46.53	554.17	106.40
4	40	4.5	720	36.76	465.75	89.42
5	50	2.8	448	22.46	295.35	56.71
6	60	2.8	448	22.42	294.82	56.61
7	70	2.8	448	22.73	290.03	55.69
8	80	2.8	448	21.64	254.70	48.90
9	90	2.8	448	23.84	251.27	48.24
9a	97.5	2.2	352	19.20	181.06	34.76
10	100	2.2	352	19.28	172.75	33.17

TEMPORAL HYDRAULIC LOAD

GATE POSITION	% OF OF FULL OPEN	PROTOTYPE TORQUE KIP-FT.	STRUT FORCE KIPS	SECTOR GEAR TORQUE KIP-FT.	PISTON ROD FORCE KIPS
0	0	TEMPORAL HYDRAULIC LOAD 1.25 FT. HEAD DIFFERENCE TORQUE = 7383.5 KIP-FT.	639.48	0	0
1	2.5		538.02	2135.93	410.09
1a	10		464.51	3502.38	672.44
2	20		413.56	4404.43	845.66
3	30		390.36	4649.19	892.63
4	40		376.90	4775.34	916.82
5	50		462.73	6224.36	1195.41
6	60		462.10	6217.92	1193.81
7	70		468.29	6114.25	1173.96
8	80		488.83	5753.55	1104.73
9	90		502.57	5297.12	1017.06
9a	97.5		402.82	3798.62	729.39
10	100		404.71	3626.22	696.36

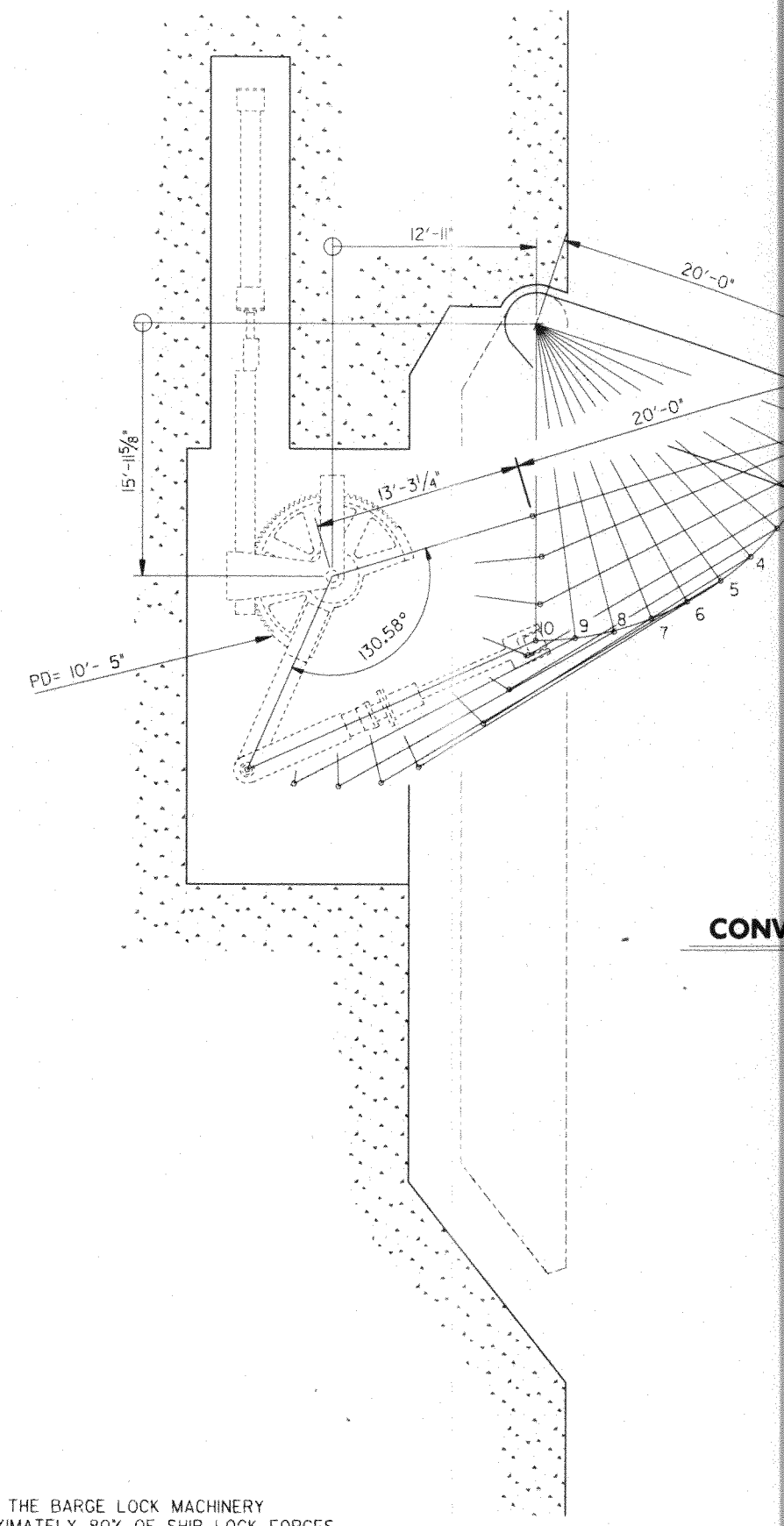

NOTE:
FORCES ON THE BARGE LOCK MACHINERY
ARE APPROXIMATELY 80% OF SHIP LOCK FORCES.

VALUE ENGINEERING INCENTIVE CLAUSES YOUR KEY TO HIGHER PROFITS

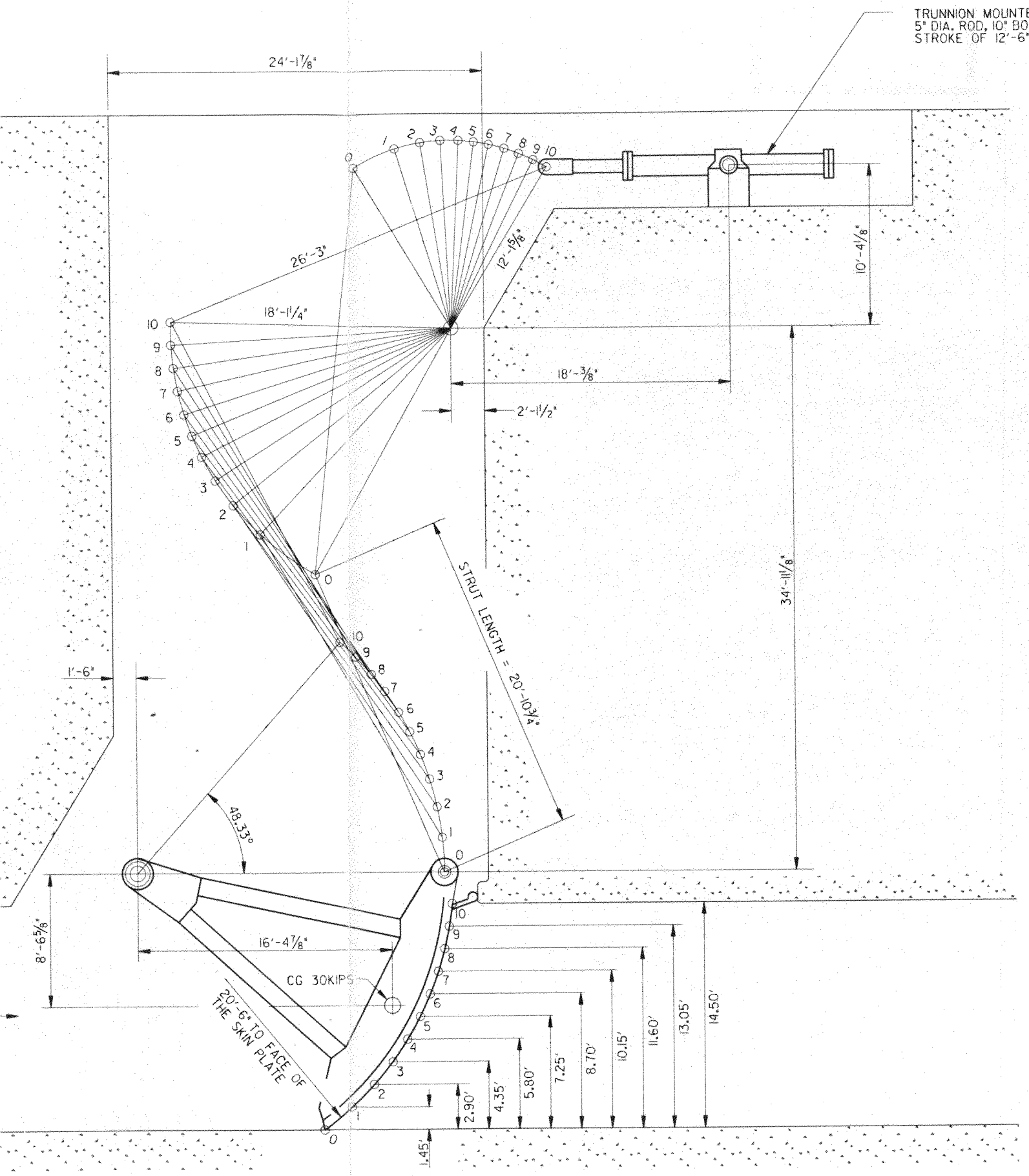

VALVE SCHEMATIC

SCALE: 1/4" = 1' - 0"

OPERATING FORCES IN KIPS											
MEMBER	POSITION NUMBER										
	0	1	2	3	4	5	6	7	8	9	10
STRUT FORCE	29.8	31.4	31.8	31.8	31.7	31.2	30.8	30.5	30.2	29.6	28.7
CYLINDER FORCE REQ'D.	41.7	47.9	49.2	48.0	47.5	46.0	44.6	43.8	43.4	43.4	43.9
CYLINDER FORCE AVAIL.	88	88	88	88	88	88	88	88	88	88	88

NOTES:
1. CYLINDER FORCE AVAILABLE IS BASED ON A ROD DIAMETER OF 5", CYLINDER BORE OF 10" AND AN OPERATING PRESSURE OF 1500 PSI.
2. STRUT AND CYLINDER FORCES REQ'D. INCLUDE THE WEIGHT OF THE VALVE PLUS 10% FOR CONTINGENCIES.

NOTE:
THE INFORMATION CONTAINED HEREIN IS PRELIMINARY AND IS PRESENTED MERELY FOR COST ESTIMATING PURPOSES.

C·A·D

MISSISSIPPI RIVER - GULF OUTLET
NEW LOCK AND CONNECTION CHANNELS
(INDUSTRIAL CANAL LOCK REPLACEMEN)
FEASIBILITY STUDY
NORTH OF CLAIBORNE AVE. SITE

TAINTER VALVE
900' SHIP/BARGE LOCK

U.S. ARMY ENGINEER DISTRICT, NEW ORLEANS
CORPS OF ENGINEERS
NEW ORLEANS, LOUISIANA

DESIGNED BY:	D.C.S.	PLOT SCALE: 48	PLOT DATE: NOV. 1994	CADD FILE: IHNC_VAL.DGN
DRAWN BY:	G.P.W.			FILE NO. H-2-40392
CHECKED BY:	D.C.S.	DATE: NOV. 1994		

PLATE B-55N

Safety is a Part of Your Contract

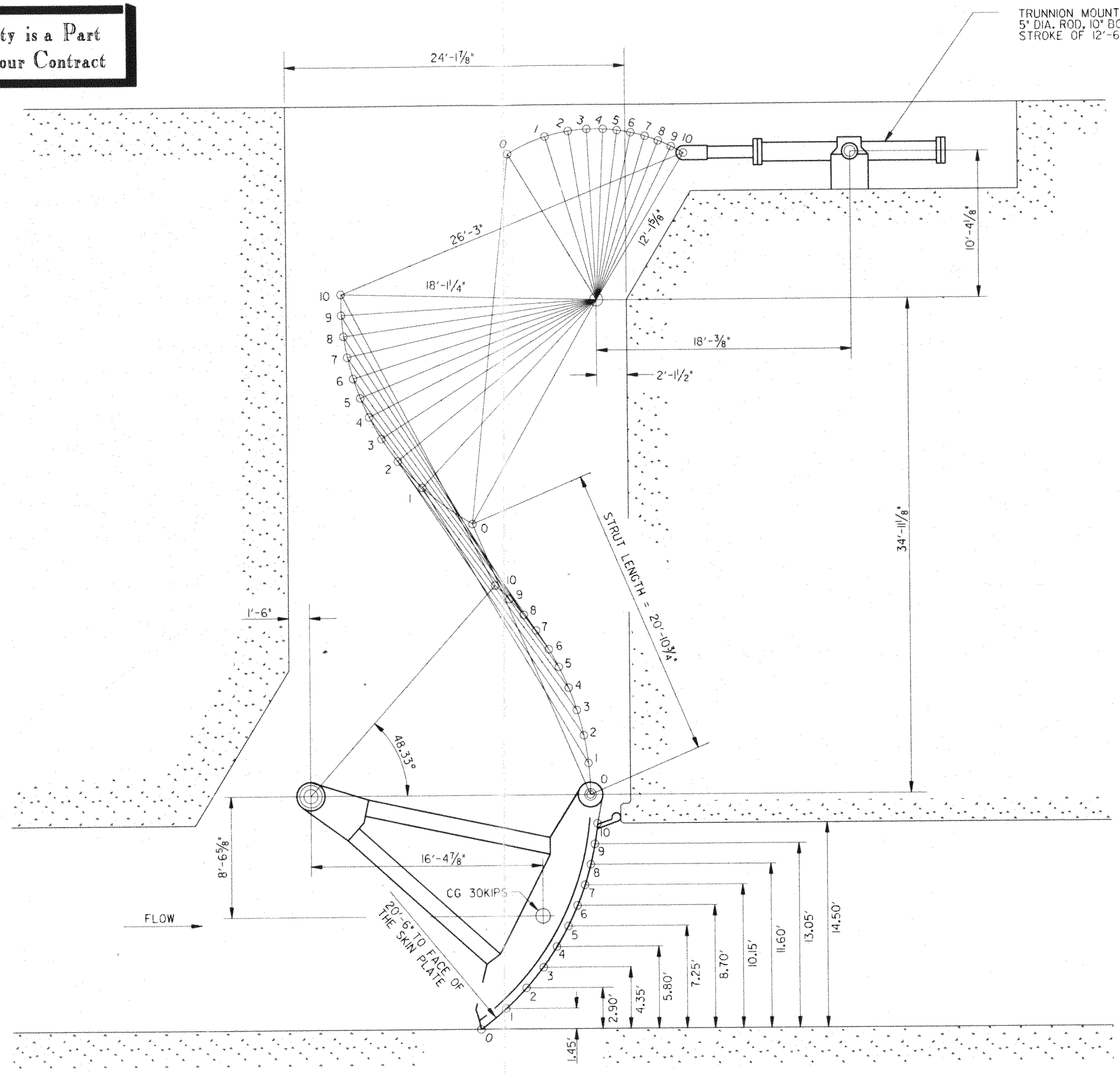

MEMBER	OPERATING FORC POS				
	0	1	2	3	4
STRUT FORCE	29.8	31.4	31.8	31.8	31.
CYLINDER FORCE REQ'D.	41.7	47.9	49.2	48.0	47.
CYLINDER FORCE AVAIL.	88	88	88	88	88

NOTES:
1. CYLINDER FORCE AVAILABLE IS BASED ON A ROD DIAMETER OF 5", CYLINDER BORE OF 10" AND AN OPERATING PRESSURE OF 1500 PSI.
2. STRUT AND CYLINDER FORCES REQ'D. INCLUDE THE WEIGHT OF THE VALVE PLUS 10% FOR CONTINGENCIES.

NOTE
THE
IS PR
MERE

VALVE SCHEMATIC

SCALE: 1/4" = 1' - 0"

VALUE ENGINEERING INCENTIVE CLAUSES YOUR KEY TO HIGHER PROFITS

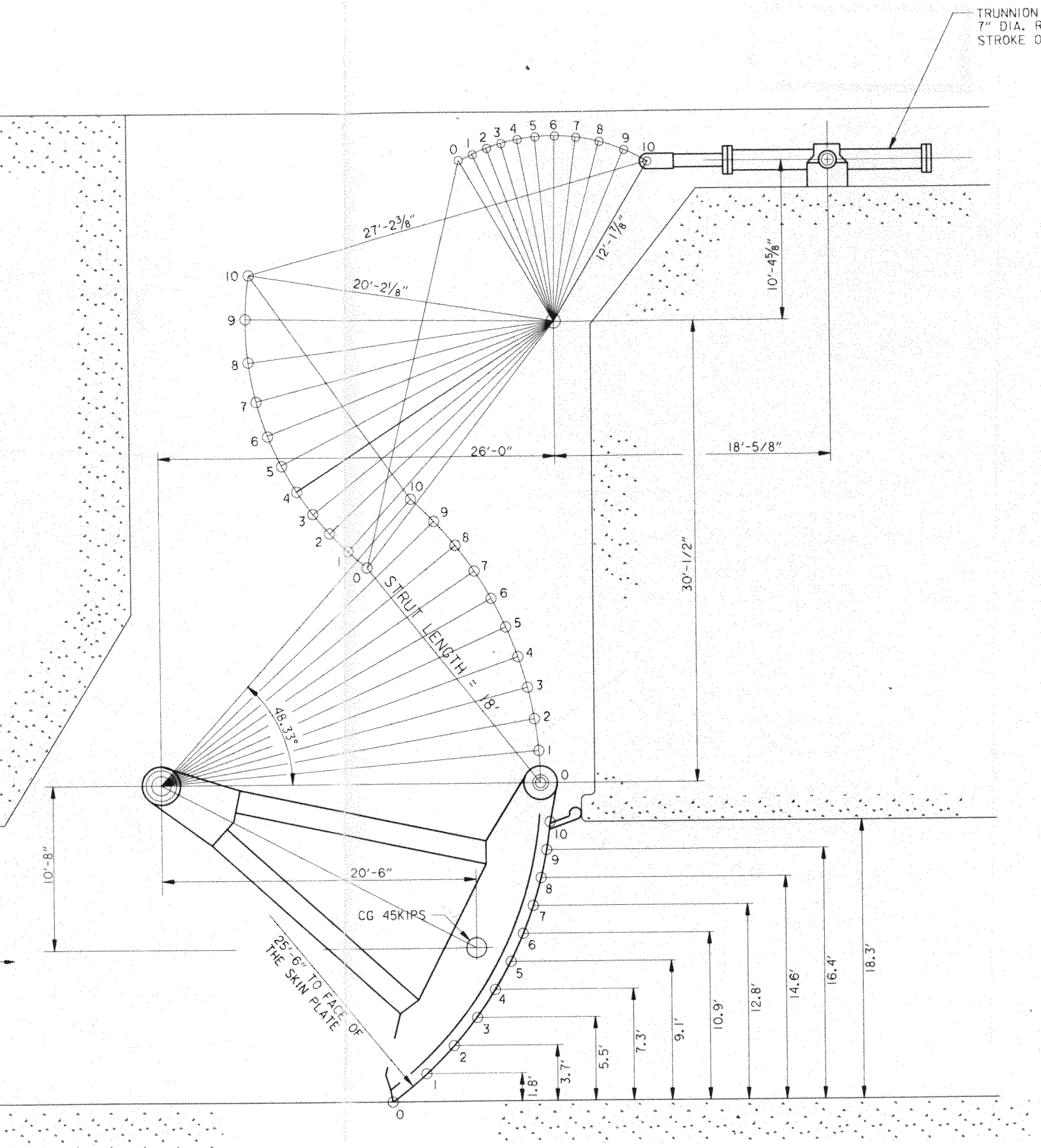

VALVE SCHEMATIC

SCALE: 1/4" = 1' - 0"

OPERATING FORCES IN KIPS

MEMBER	POSITION NUMBER										
	0	1	2	3	4	5	6	7	8	9	10
STRUT FORCE	52.0	54.1	55.6	55.7	56.1	53.2	50.8	47.4	45.5	44.5	44.4
CYLINDER FORCE REQ'D.	91.2	98.1	98.1	97.7	96.9	96.1	95.3	94.1	94.4	96.8	102.3
CYLINDER FORCE AVAIL.	141.4	141.4	141.4	141.4	141.4	141.4	141.4	141.4	141.4	141.4	141.4

NOTES:
1. CYLINDER FORCE AVAILABLE IS BASED ON A ROD DIAMETER OF 7", CYLINDER BORE OF 13" AND AN OPERATING PRESSURE OF 1500 PSI.
2. STRUT AND CYLINDER FORCES REQ'D. INCLUDE THE WEIGHT OF THE VALVE PLUS 10% FOR CONTINGENCIES.

NOTE:
THE INFORMATION CONTAINED HEREIN IS PRELIMINARY AND IS PRESENTED MERELY FOR COST ESTIMATING PURPOSES.

MISSISSIPPI RIVER - GULF OUTLET
NEW LOCK AND CONNECTION CHANNELS
(INDUSTRIAL CANAL LOCK REPLACEMEN)
FEASIBILITY STUDY
NORTH OF CLAIBORNE AVE. SITE

TAINTER VALVE
1200' SHIP/BARGE LOCK

C·A·D

U.S. ARMY ENGINEER DISTRICT, NEW ORLEANS
CORPS OF ENGINEERS
NEW ORLEANS, LOUISIANA

DESIGNED BY:	D.C.S.	PLOT SCALE: 48	PLOT DATE: NOV. 1994	CADD FILE: IHNC_VA2.DGN
DRAWN BY:	G.P.W.			FILE NO. H-2-40392
CHECKED BY:	D.C.S.	DATE: NOV. 1994		

PLATE B-55T

Safety is a Part of Your Contract

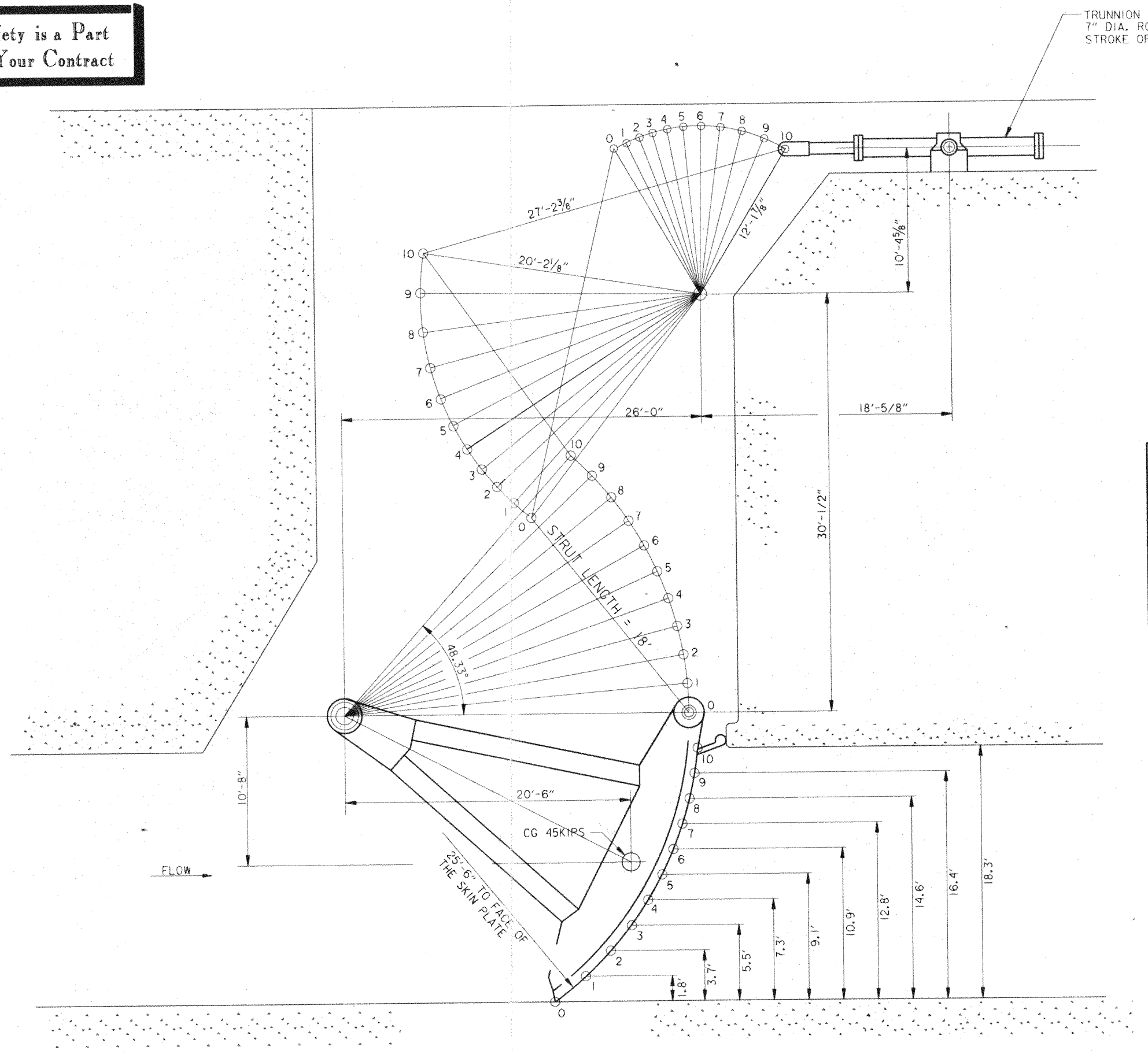

MEMBER	OPERATING FO				
	P				
	0	1	2	3	
STRUT FORCE	52.0	54.1	55.6	55.7	5
CYLINDER FORCE REQ'D.	91.2	98.1	98.1	97.7	9
CYLINDER FORCE AVAIL.	141.4	141.4	141.4	141.4	1

NOTES:
1. CYLINDER FORCE AVAILABLE IS BASED ON A ROD DIAMETER OF 7", CYLINDER BORE OF 13" AND AN OPERATING PRESSURE OF 1500 PSI.
2. STRUT AND CYLINDER FORCES REQ'D. INCLUDE THE WEIGHT OF THE VALVE PLUS 10% FOR CONTINGENCIES.

VALVE SCHEMATIC

SCALE: 1/4" = 1' - 0"

VALUE ENGINEERING INCENTIVE CLAUSES YOUR KEY TO HIGHER PROFITS

PRIME POWER GENERATOR
300 KW, 0.8 P.F., 480 VOLTS
3 PHASE, 3 WIRE 60 HERTZ

MAIN DISTRIBUTION SWITCHBOARD
480V, 800A, 3 PHASE, 3W BUS

POWER COMPANY TERMINAL POLE
DUCT BANK
HIGH VOLTAGE POWER CABLE TERMINALS
13.2 KV
500 KVA
480V, 3 PHASE
3 WIRE, 60 HZ
PAD MOUNTED
MAIN SERVICE
TRANSFORMER

VOLTAGE REGULATOR
600AF 600AT 3P
120V 480V
ETM
100 AF 100 AT 3P
800 AF 700 AT 3P
800 AF 600 AT 3P
ADMIN. BLDG.
600/5
800/1

MOTOR CONTROL CENTER (NEMA STANDARD CLASS II, TYPE C), LOCATED IN EQUIPMENT BLDG.

CONTROLLER CABINET
600 AF 500 AT 3P
GENERATOR DISCONNECT
800 AF 700 AT 3P
METER PANEL
INCOMING LINE DISCONNECT
METER PANEL
GENERATOR METERING
INCOMING LINE METERING
GND. DET.
GROUND DETECTOR
800A ATS
AUTOMATIC TRANSFER SWITCH
SPACE
250 AF 225 AT 3P
RV
EASTWALL HYDRAULIC PUMP
250 AF 225 AT 3P
RV
WESTWALL HYDRAULIC PUMP
250 AF 175 AT 3P
RV
AIR COMPRESSOR
100 AF 40 AT 3P
480V 30 KVA 208/120V
PANEL LP1
PANEL BOARD LP1
100 AF 40 AT 3P
480V 30 KVA 208/120V
PANEL LP2
PANEL BOARD LP2
100 AF 40 AT 3P
480V 30 KVA 208/120V
PANEL LP3
PANEL BOARD LP3
100-3 8/28 3P
FUEL OIL TRANSFER PUMP
120V 5 KVA 120V
ISOLATION TRANSFORMER
SPACE
SPACE
SPACE
100 AF 15 AT 3P
CONTROLLER
DUPLEX SUMP PUMP
100 AF 15 AT 3P
CONTROLLER
DUPLEX SUMP PUMP
SPACE
100 AF 15 AT 3P
CONTROLLER
LE EAST SWEEP NOZZLE HYD. PUMP

100 AF 15 AT 3P
CONTROLLER
LE WEST SWEEP NOZZLE HYD. PUMP
100 AF 15 AT 3P
CONTROLLER
RE EAST SWEEP NOZZLE HYD. PUMP
100 AF 15 AT 3P
CONTROLLER
RE WEST SWEEP NOZZLE HYD. PUMP
100 AF 20 AT 3P
CONTROLLER
EASTSIDE GALLERY SUMP PUMP
100 AF 20 AT 3P
CONTROLLER
WESTSIDE GALLERY SUMP PUMP
SPACE
100 AF 90 AT 3P
CARRIAGE SYSTEM MAIN DISCONNECT
100-30 90/390 3P
PC
PCR PCL
EASTSIDE CARRIAGE MOTOR AND BRAKE
100-30 90/390 3P
PCR PCL
WESTSIDE CARRIAGE MOTOR AND BRAKE
100 AF 15 AT 3P
CONTROLLER
MECH. ROOM EXHAUST FAN
SPACE
100 AF 40 AT 3P
CONTROL HOUSE #1
100 AF 40 AT 3P
CONTROL HOUSE #2
100 AF 20 AT 3P
CONTROL HOUSE #3
100 AF 20 AT 3P
CONTROL HOUSE #4
100 AF 15 AT 3P
CONTROLLER
BULKHEAD STORAGE SUMP PUMP
SPACE
100 AF 60 AT 3P
EASTWALL LOCK POWER RECEPTACLE
100 AF 60 AT 3P
WESTWALL LOCK POWER RECEPTACLE
100 AF 15 AT 3P
30A
480V 6 KVA 208/120V
100 AF 20 AT 3P
EASTWALL LOCK CHAMBER LIGHTS
480V 6 KVA 208/120V
100 AF 20 AT 3P
WESTWALL LOCK CHAMBER LIGHTS

100 AF 30 AT 3P
30A
LIGHTING HIGH MAST NO.1
6KW, M*1
100 AF 30 AT 3P
30A
LIGHTING HIGH MAST NO.2
6KW, M*2
LIGHTING HIGH MAST NO.3
6KW, M*3
LIGHTING HIGH MAST NO.4
6KW, M*4
100 AF 15 AT 3P
20A
20A
480V 3 KVA 208/120V
480V 3 KVA 208/120V
LAKE END GUIDEWALL LIGHTING
RIVER END GUIDEWALL LIGHTING
225 AF 125 AT 3P
RV
L.E. SILT FLUSHING PUMP
225 AF 125 AT 3P
RV
R.E. SILT FLUSHING PUMP

Safety is a Part of Your Contract

MISSISSIPPI RIVER - GULF OUTLET
NEW LOCK AND CONNECTION CHANNELS
(INDUSTRIAL CANAL LOCK REPLACEMENT)
FEASIBILITY STUDY
NORTH OF CLAIBORNE AVE. SITE

ELECTRICAL-ONE LINE DIAGRAM
1200'/900' SHIP/BARGE LOCK

U.S. ARMY ENGINEER DISTRICT, NEW ORLEANS
CORPS OF ENGINEERS
NEW ORLEANS, LOUISIANA

DESIGNED BY: D.F.B.	PLOT SCALE: 1	PLOT DATE: NOV. 1994	CADD FILE: 931INNC1.DGN	
DRAWN BY: G.P.W.			FILE NO.	H-2-40392
CHECKED BY: D.F.B.	DATE: NOV. 1994			

PRIME POWER GENERATOR
300 KW, 0.8 P.F., 480 VOLTS
3 PHASE, 3 WIRE, 60 HERTZ

CONTROL PANEL MOUNTED ON GENERATOR

VOLTAGE REGULATOR

600AF 500AT 3P

120V 480V

ETM

MAIN DISTRIBUTION SWITCHBOARD
480V, 800A, 3 PHASE, 3W BUS

100 AF 100 AT 3P

800 AF 700 AT 3P

800 AF 800 AT 3P

ADMIN. BLDG.

POWER COMPANY TERMINAL POLE

DUCT BANK

HIGH VOLTAGE POWER CABLE TERMINALS

13.2 KV
500 KVA
480V, 3 PHASE
3 WIRE, 60 HZ
PAD MOUNTED
MAIN SERVICE
TRANSFORMER

600/5

800/1

MOTOR CONTROL CENTER (NEMA STANDARD CLASS II, TYPE C), LOCATED IN EQUIPMENT BLDG.

PROGRAMMABLE LOGIC CONTROLLER CABINET

600 AF 500 AT 3P

800 AF 700 AT 3P

METER PANEL

METER PANEL

GND. DET.

800A ATS

250 AF 225 AT 3P

250 AF 225 AT 3P

250 AF 175 AT 3P

100 AF 40 AT 3P

100 AF 40 AT 3P

100 AF 40 AT 3P

100-3 8/28 3P

100 AF 15 AT 3P

RV

480V 30 KVA 208/120V

120V 5 KVA 120V

PANEL LP1

PANEL LP2

PANEL LP3

200

125

100

15

1/3

CONTROLLER

2

PROGRAMMABLE LOGIC CONTROLLER CABINET

GENERATOR DISCONNECT

SPACE

INCOMING LINE DISCONNECT

GENERATOR METERING

INCOMING LINE METERING

GROUND DETECTOR

AUTOMATIC TRANSFER SWITCH

SPACE

EASTWALL HYDRAULIC PUMP

WESTWALL HYDRAULIC PUMP

AIR COMPRESSOR

PANEL BOARD LP1

PANEL BOARD LP2

PANEL BOARD LP3

FUEL OIL TRANSFER PUMP

ISOLATION TRANSFORMER

SPACE

SPACE

SPACE

DUPLEX SUMP PUMP

DUPLEX SUMP PUMP

100 AF 15 AT 3P

100 AF 20 AT 3P

100 AF 90 AT 3P

100-30 90/390 3P

PC

PCR

PCL

100 AF 60 AT 3P

CONTROLLER

3/4

5

30

15 B

60

LE WEST SWEEP NOZZLE HYD. PUMP

RE EAST SWEEP NOZZLE HYD. PUMP

RE WEST SWEEP NOZZLE HYD. PUMP

EASTSIDE GALLERY SUMP PUMP

WESTSIDE GALLERY SUMP PUMP

SPACE

CARRIAGE SYSTEM MAIN DISCONNECT

EASTSIDE CARRIAGE MOTOR AND BRAKE

WESTSIDE CARRIAGE MOTOR AND BRAKE

MECH. ROOM EXHAUST FAN

SPACE

CONTROL HOUSE #1

CONTROL HOUSE #2

CONTROL HOUSE #3

CONTROL HOUSE #4

BULKHEAD STORAGE SUMP PUMP

SPACE

EASTWALL LOCK POWER RECEPTACLE

WESTWALL LOCK POWER RECEPTACLE

EASTWALL DOCK LIGHTS

100 AF 30 AT 3P

100 AF 15 AT 3P

225 AF 125 AT 3P

30A

20A

480V 3 KVA 208/120V

6KW, M#1

6KW, M#2

6KW, M#3

6KW, M#4

6

60

100

LIGHTING HIGH MAST NO.1

LIGHTING HIGH MAST NO.2

LIGHTING HIGH MAST NO.3

LIGHTING HIGH MAST NO.4

LAKE END GUIDEWALL LIGHTING

RIVER END GUIDEWALL LIGHTING

L.E. SILT FLUSHING PUMP

R.E. SILT FLUSHING PUMP

VALUE ENGINEERING INCENTIVE CLAUSES YOUR KEY TO HIGHER PROFITS

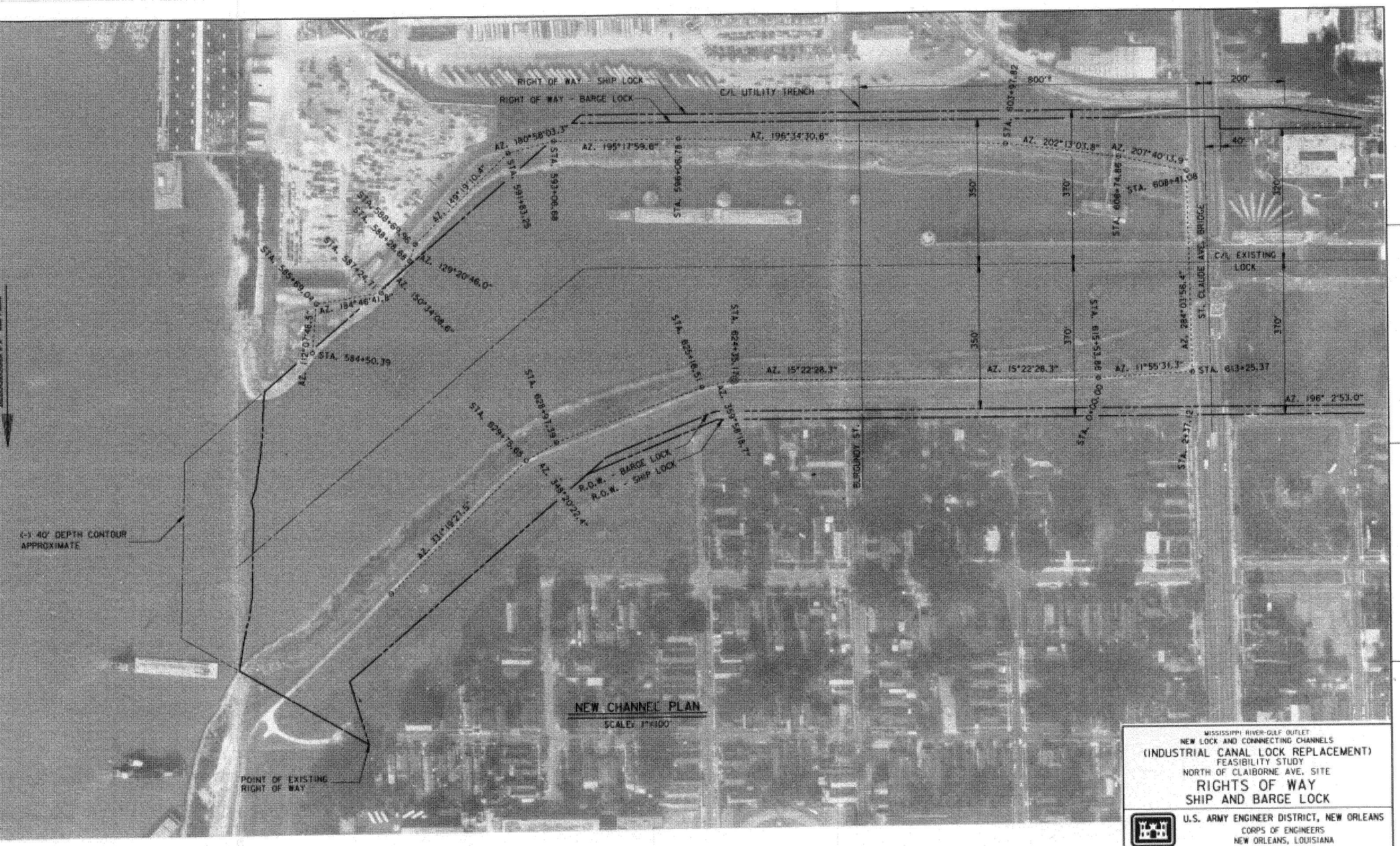

NEW CHANNEL PLAN
SCALE: 1"=100'

MISSISSIPPI RIVER-GULF OUTLET
NEW LOCK AND CONNNECTING CHANNELS
(INDUSTRIAL CANAL LOCK REPLACEMENT)
FEASIBILITY STUDY
NORTH OF CLAIBORNE AVE. SITE
RIGHTS OF WAY
SHIP AND BARGE LOCK

U.S. ARMY ENGINEER DISTRICT, NEW ORLEANS
CORPS OF ENGINEERS
NEW ORLEANS, LOUISIANA

DESIGNED BY: MHG	PLOT SCALE: 100	PLOT DATE: X	CADD FILE: NCROWBR1.DGN	
DRAWN BY: HAT	DATE: NOVEMBER 1994		FILE NO.: H-2-40392	
CHECKED BY: ADS				

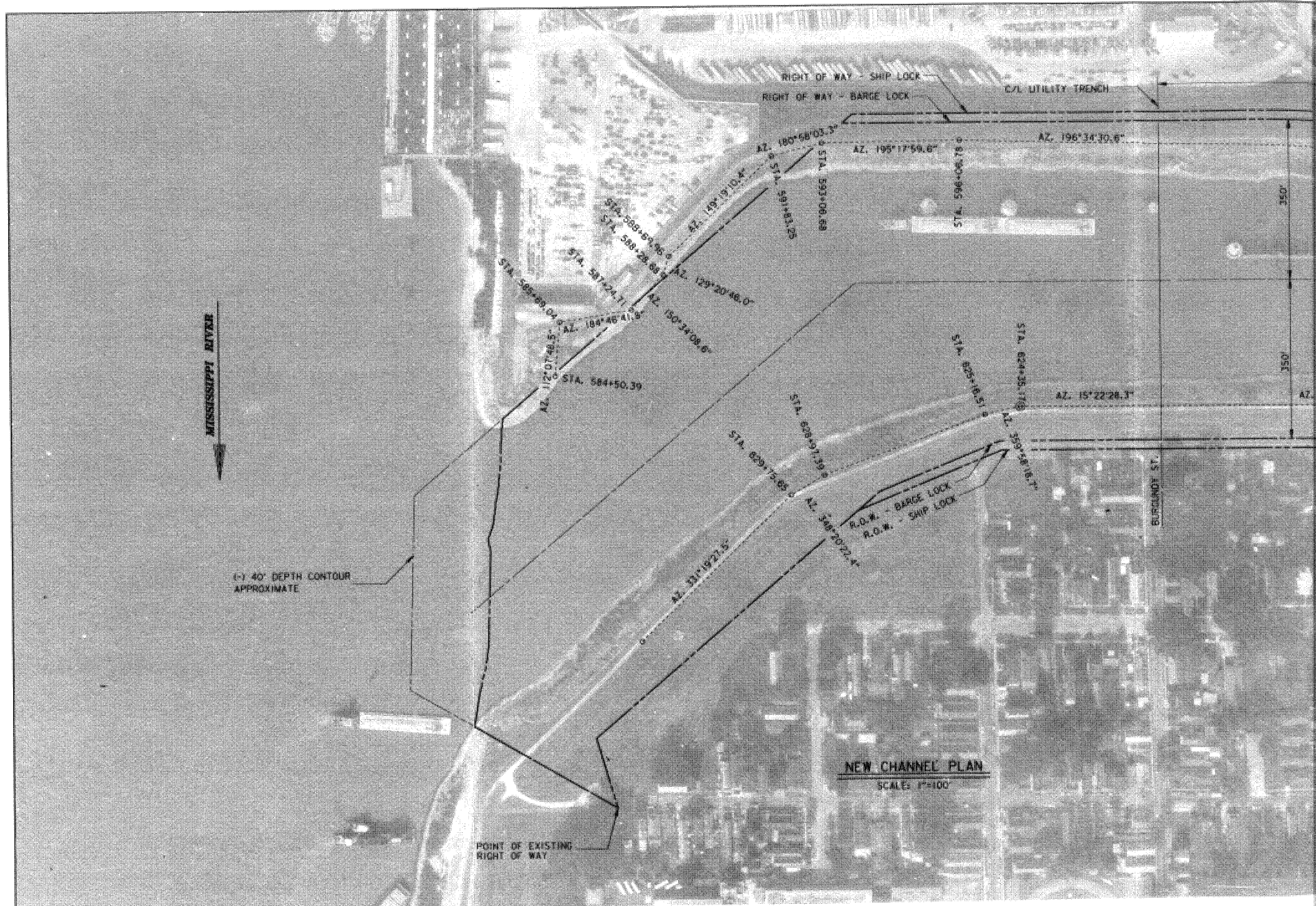

NEW CHANNEL PLAN

SCALE: 1"=100'

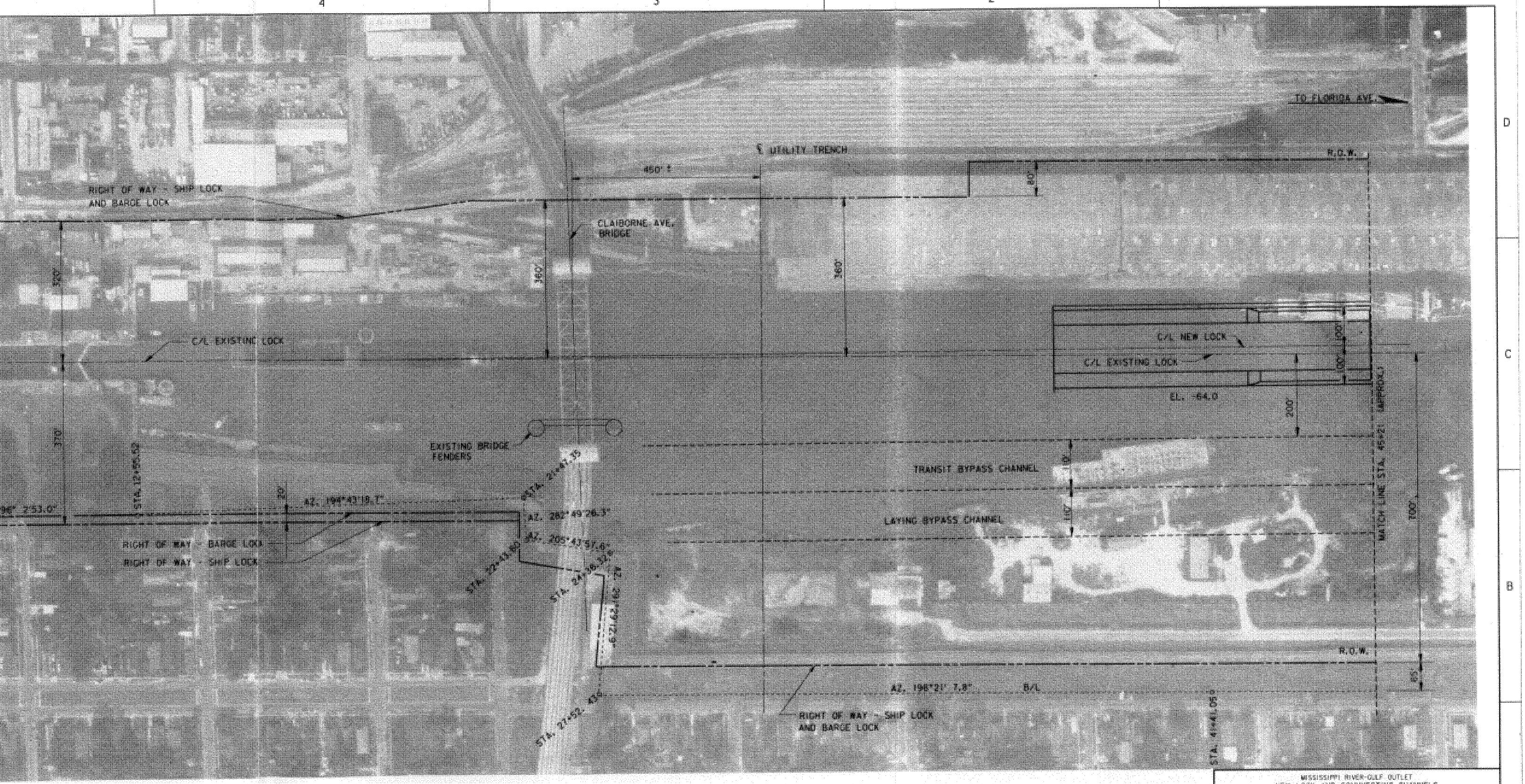

MISSISSIPPI RIVER-GULF OUTLET
NEW LOCK AND CONNNECTING CHANNELS
(INDUSTRIAL CANAL LOCK REPLACEMENT)
FEASIBILITY STUDY
NORTH OF CLAIBORNE AVE. SITE

RIGHTS OF WAY
SHIP AND BARGE LOCK

U.S. ARMY ENGINEER DISTRICT, NEW ORLEANS
CORPS OF ENGINEERS
NEW ORLEANS, LOUISIANA

DESIGNED BY: MHG	PLOT SCALE: 100	PLOT DATE: X	CADD FILE: NCROWBR2.DGN	
DRAWN BY: HAT			FILE NO. H-2-40392	
CHECKED BY: ADS	DATE: NOVEMBER 1994			

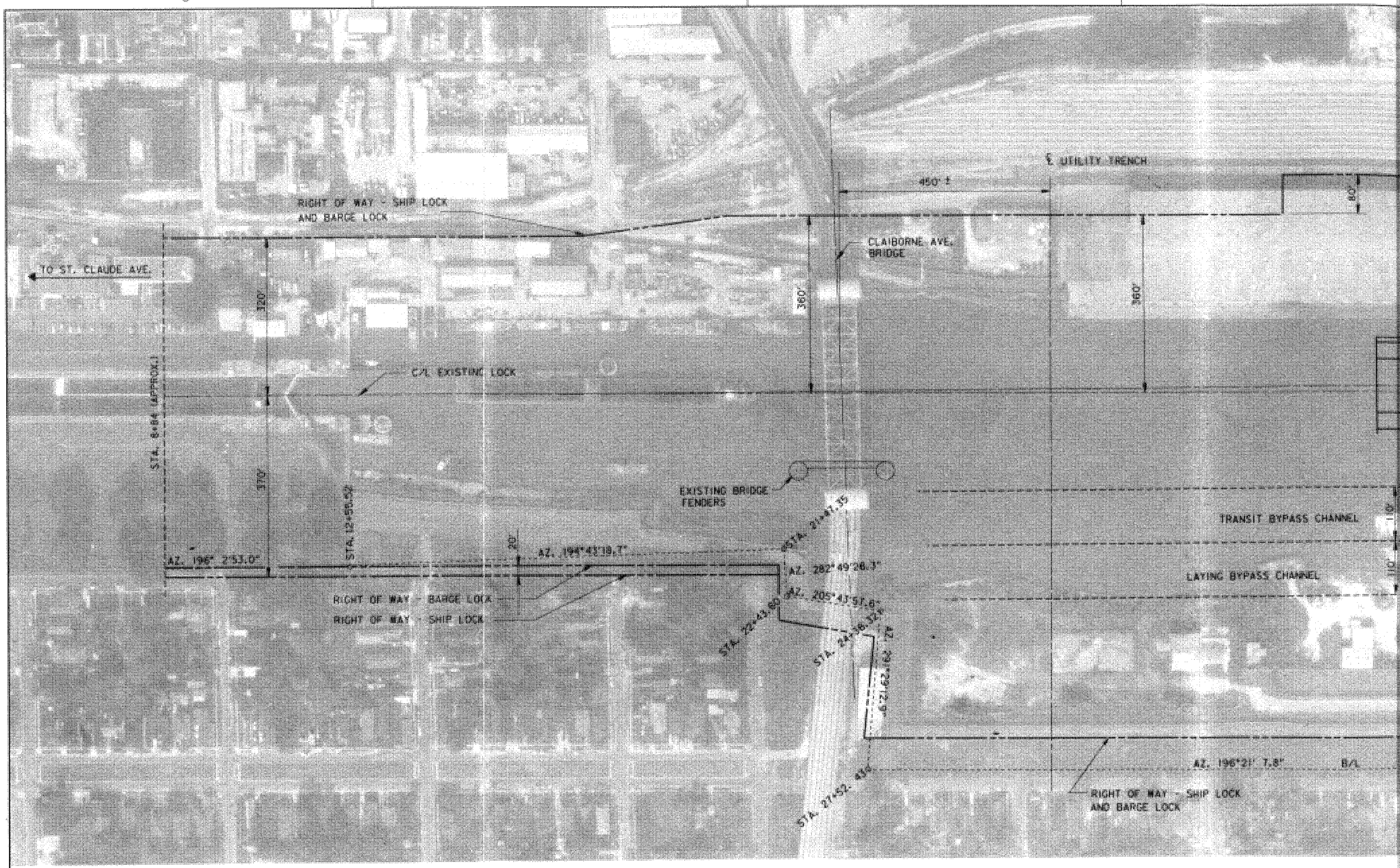

SCALE: 1" = 100'

100' 0 100' 200' 300' 400'

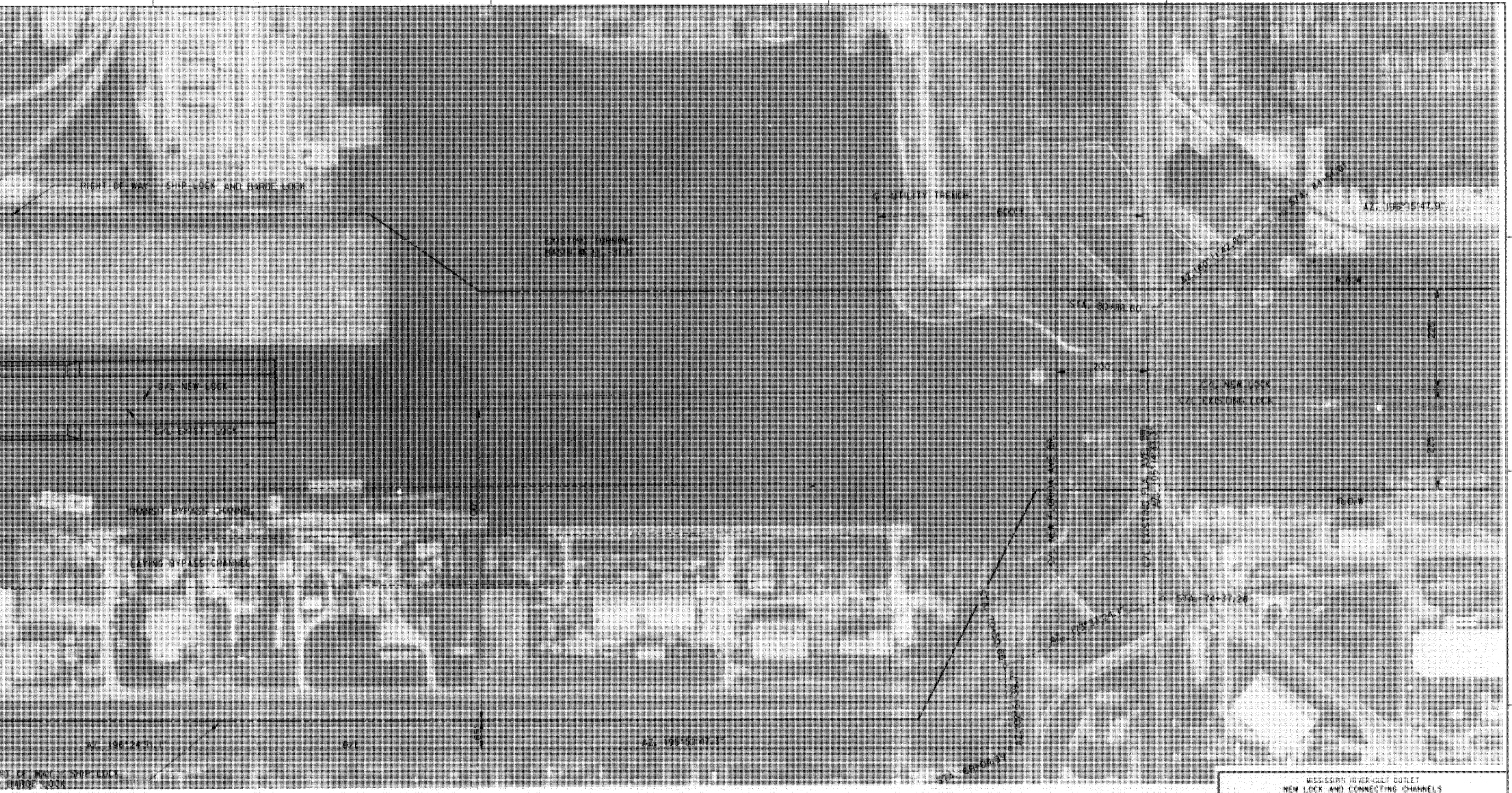

MISSISSIPPI RIVER-GULF OUTLET
NEW LOCK AND CONNECTING CHANNELS
(INDUSTRIAL CANAL LOCK REPLACEMENT)
FEASIBILITY STUDY
NORTH OF CLAIBORNE AVE. SITE

RIGHTS OF WAY
SHIP AND BARGE LOCK

U.S. ARMY ENGINEER DISTRICT, NEW ORLEANS
CORPS OF ENGINEERS
NEW ORLEANS, LOUISIANA

DESIGNED BY: ADS	PLOT SCALE: 100	PLOT DATE: X	CADD FILE: NCROWBRD.DGN	
DRAWN BY: HAT			FILE NO. H-2-40392	
CHECKED BY: MHG	DATE: NOVEMBER 1994			

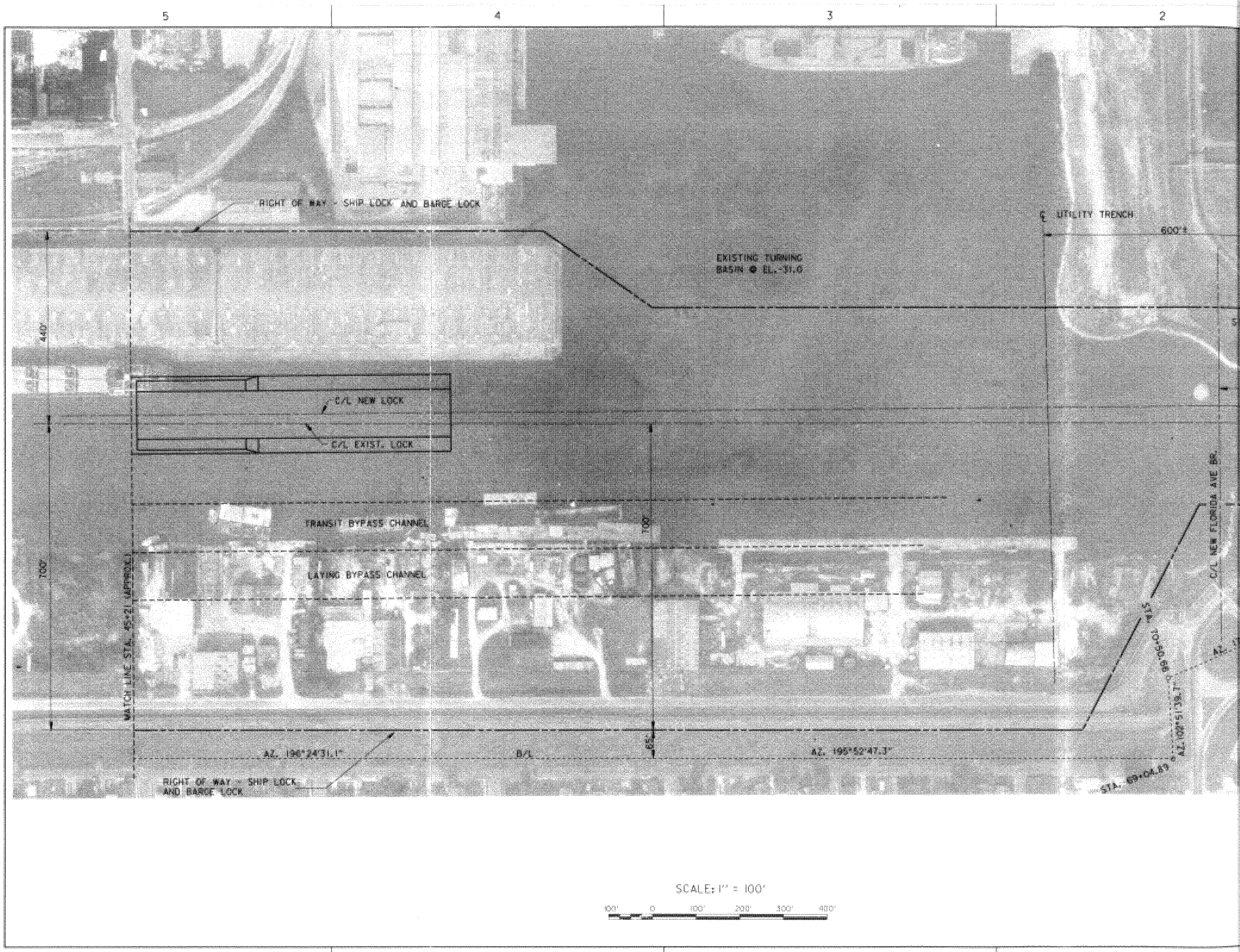

5
4
3
2
RIGHT OF WAY - SHIP LOCK AND BARGE LOCK
℄ UTILITY TRENCH
600'±
EXISTING TURNING BASIN @ EL.-31.0
440'
C/L NEW LOCK
C/L EXIST. LOCK
TRANSIT BYPASS CHANNEL
LAYING BYPASS CHANNEL
700'
700'
MATCH LINE STA. 45+21 (APPROX.)
C/L NEW FLORIDA AVE BR.
STA. 70+50.68
AZ. 102°51'39.7"
STA. 69+04.89
AZ. 196°24'31.1"
B/L
AZ. 195°52'47.3"
65'
RIGHT OF WAY - SHIP LOCK AND BARGE LOCK
SCALE: 1" = 100'
100' 0 100' 200' 300' 400'

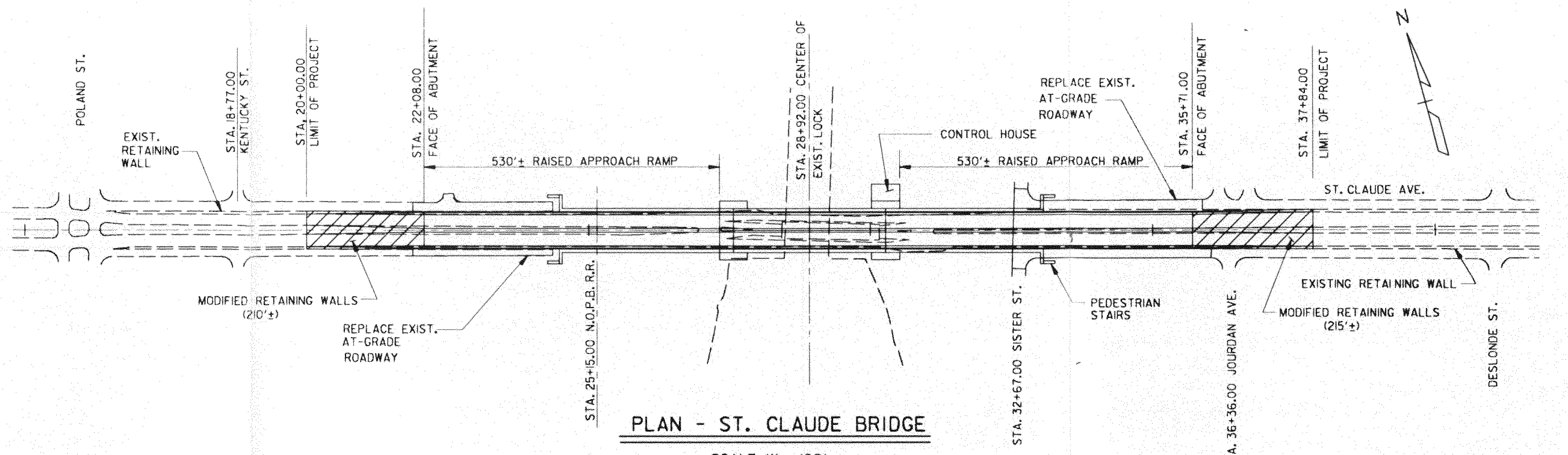

PLAN - ST. CLAUDE BRIDGE

SCALE: 1" = 100'

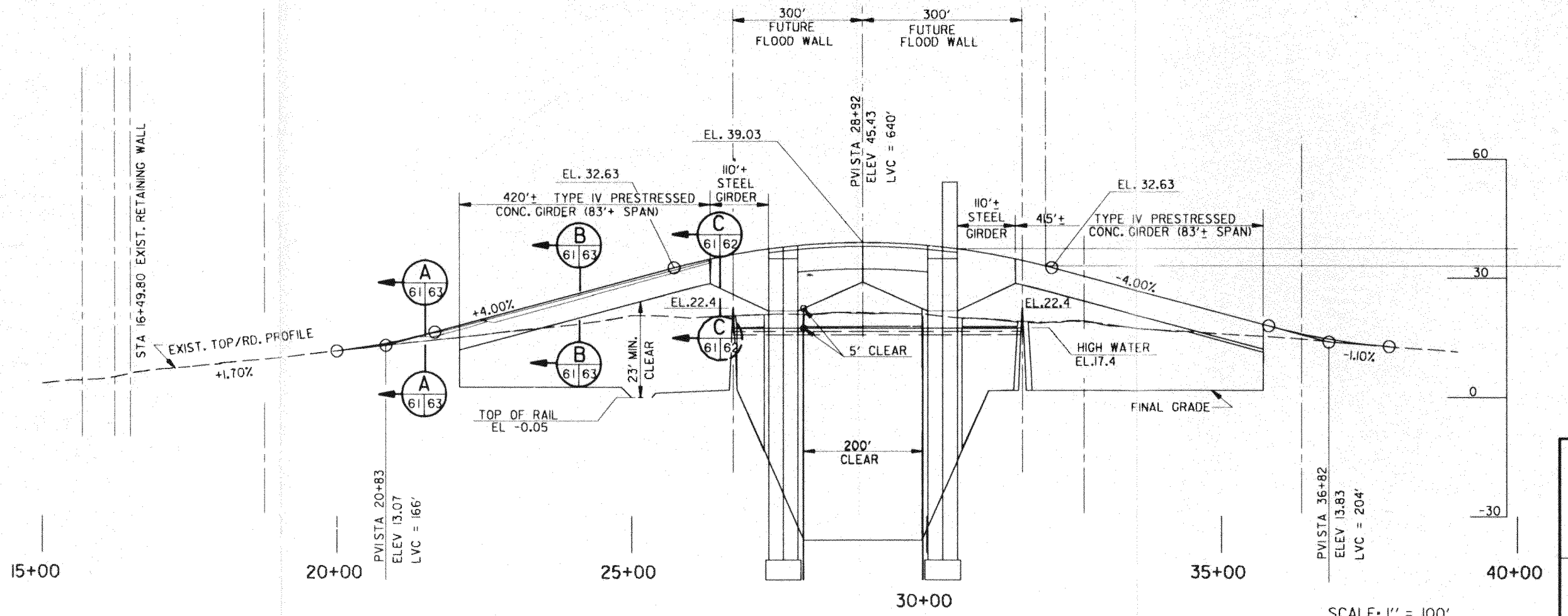

PROFILE

SCALE: HOR. 1" = 100'
SCALE: VER. 1" = 15'

SCALE: 1" = 100'

100' 0 100' 200' 300' 400'

MISSISSIPPI RIVER - GULF OUTLET
NEW LOCK AND CONNECTING CHANNELS
(INDUSTRIAL CANAL LOCK REPLACEMENT)
FEASIBILITY STUDY
NORTH OF CLAIBORNE AVE.

PLAN AND PROFILE
ST. CLAUDE AVE. BR. REPLACEMENT

U.S. ARMY ENGINEER DISTRICT, NEW ORLEANS
CORPS OF ENGINEERS
NEW ORLEANS, LOUISIANA

DESIGNED BY: MHG	PLOT SCALE: 100	PLOT DATE: X	CADD FILE: FSSTCLAI.DGN	
DRAWN BY: HAT			FILE NO. H-2-40392	
CHECKED BY: ADS	DATE: NOVEMBER 1994			

PLATE B-61

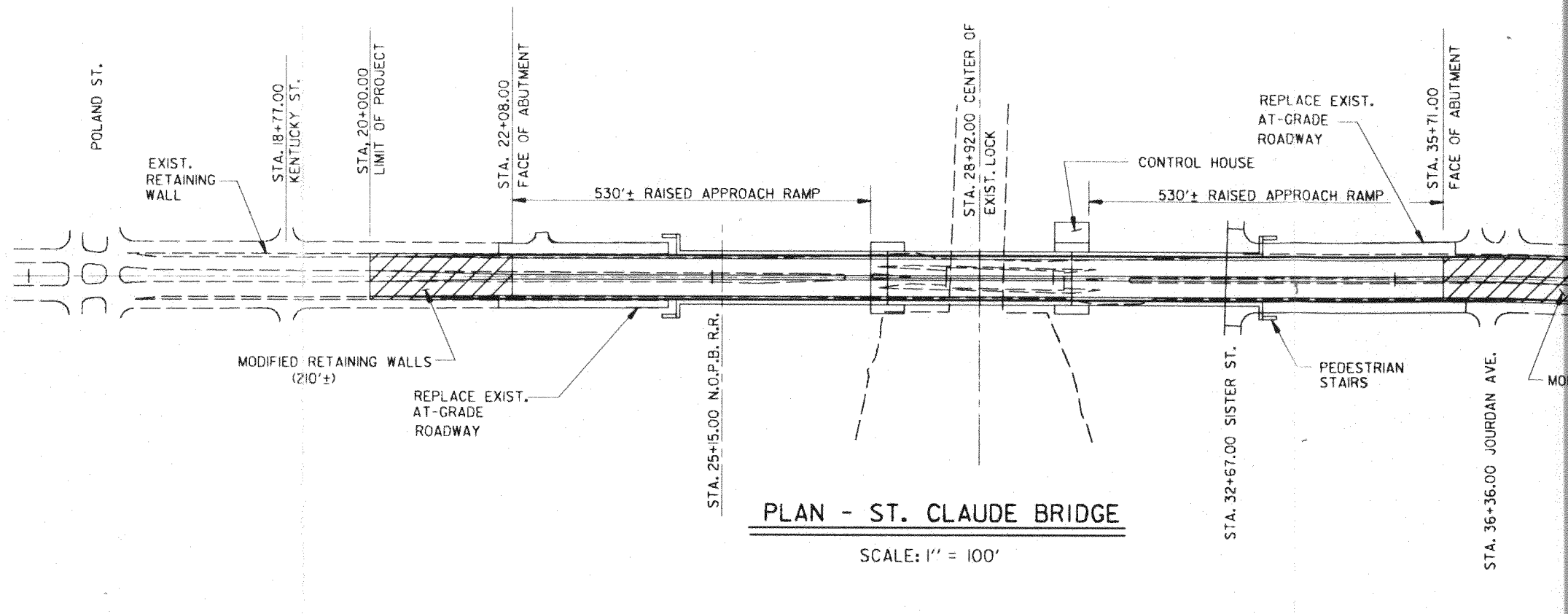

PLAN - ST. CLAUDE BRIDGE

SCALE: 1" = 100'

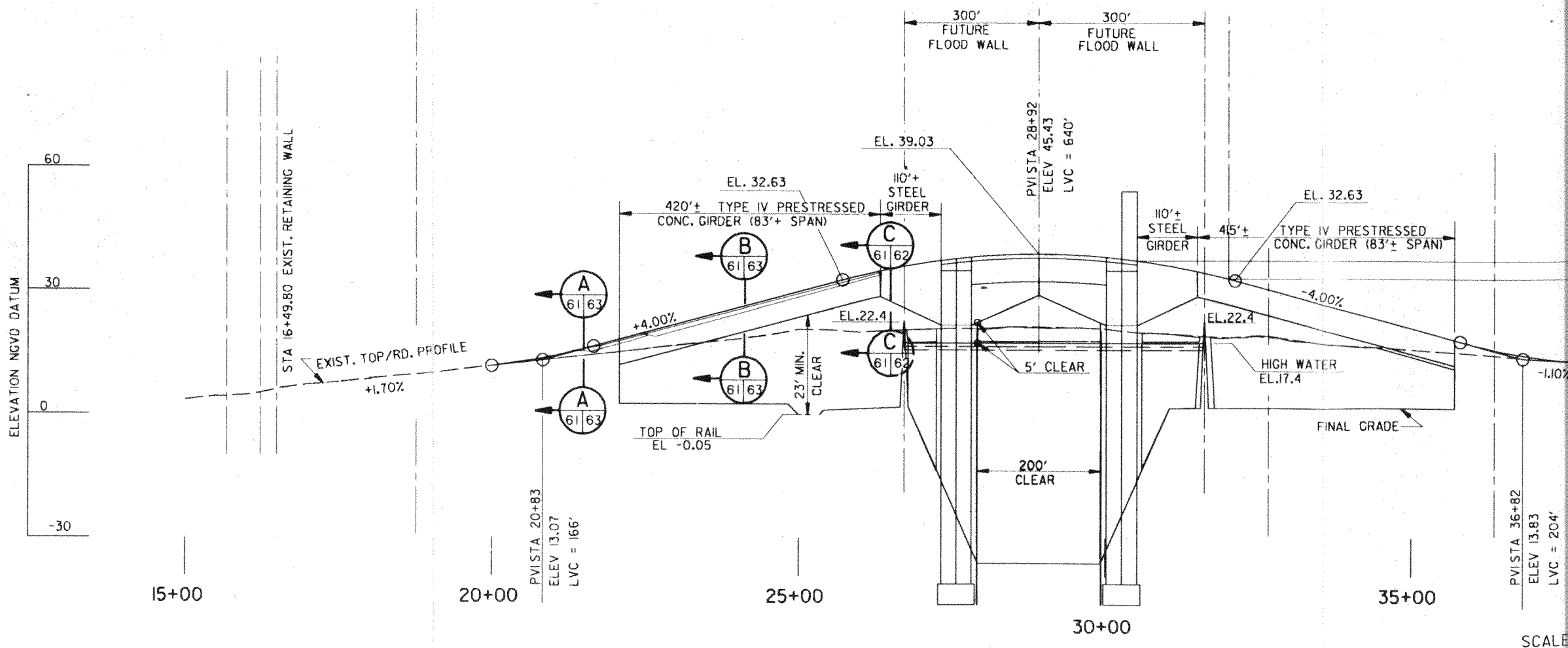

PROFILE

SCALE: HOR. 1" = 100'
SCALE: VER. 1" = 15'

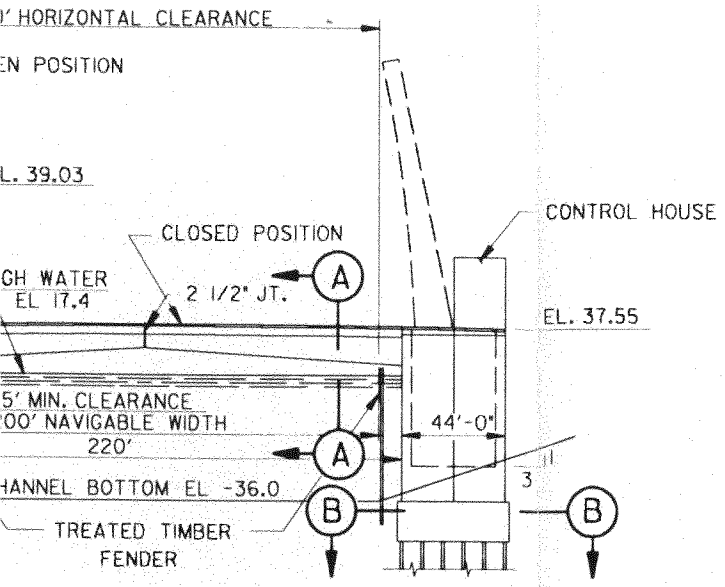

ELEVATION
FOUR LEAF BASCULE BRIDGE

SCALE: 1" = 40'-0"

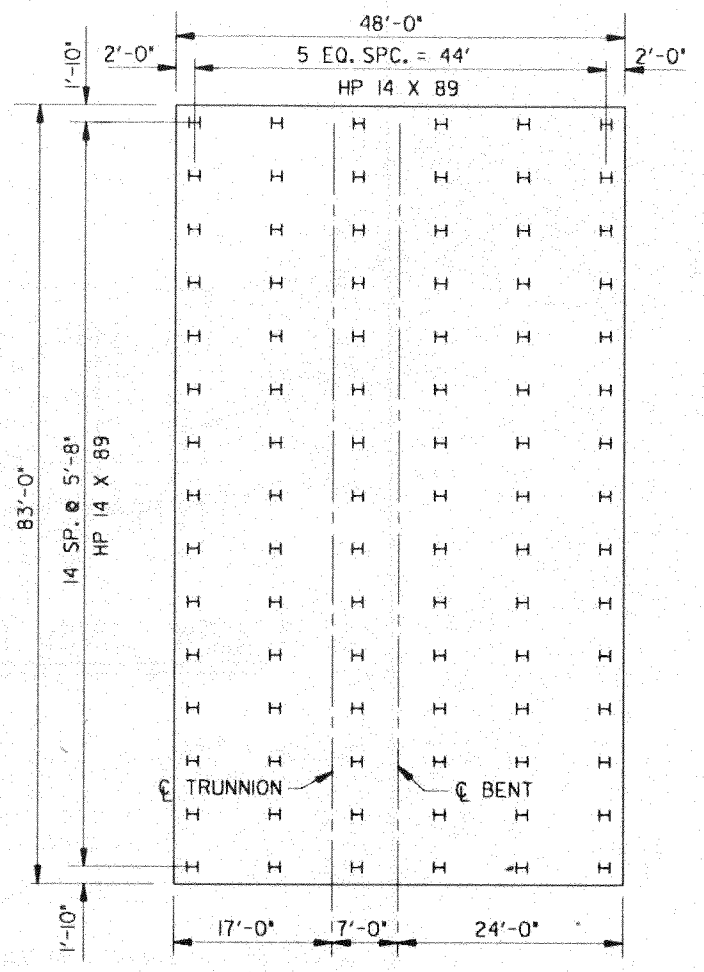

SECTION (B)
FOUNDATION PLAN

SCALE: 1" = 10'-0"

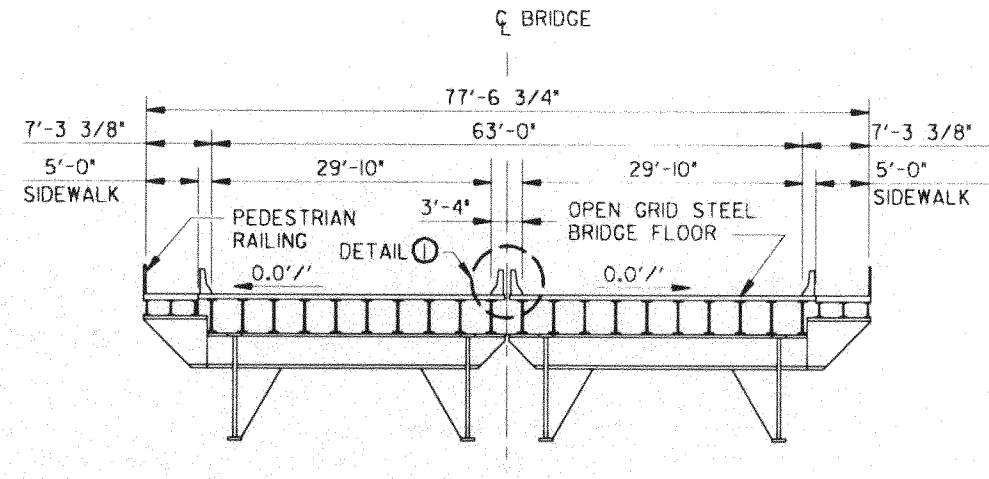

SECTION (A)

SCALE: 1" = 10'-0"

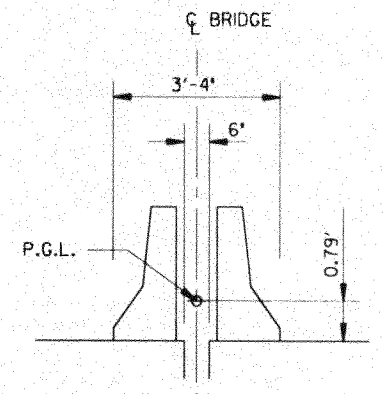

DETAIL (1)

N.T.S.

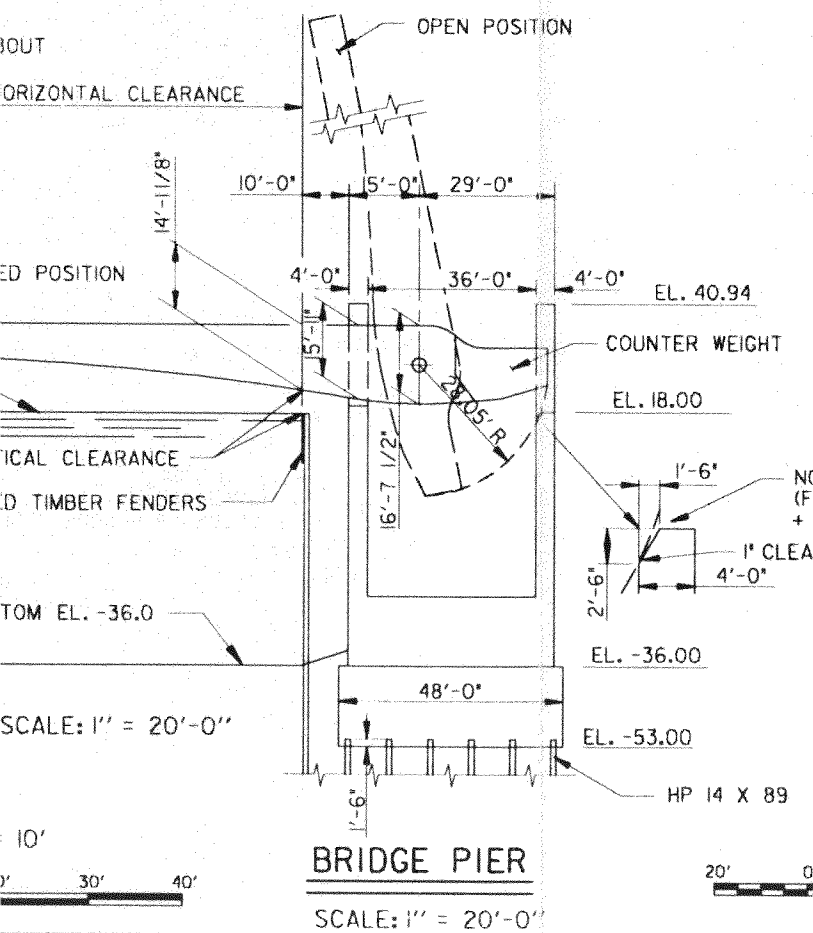

BRIDGE PIER

SCALE: 1" = 20'-0"

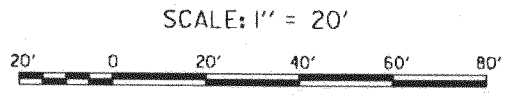

SCALE: 1" = 20'

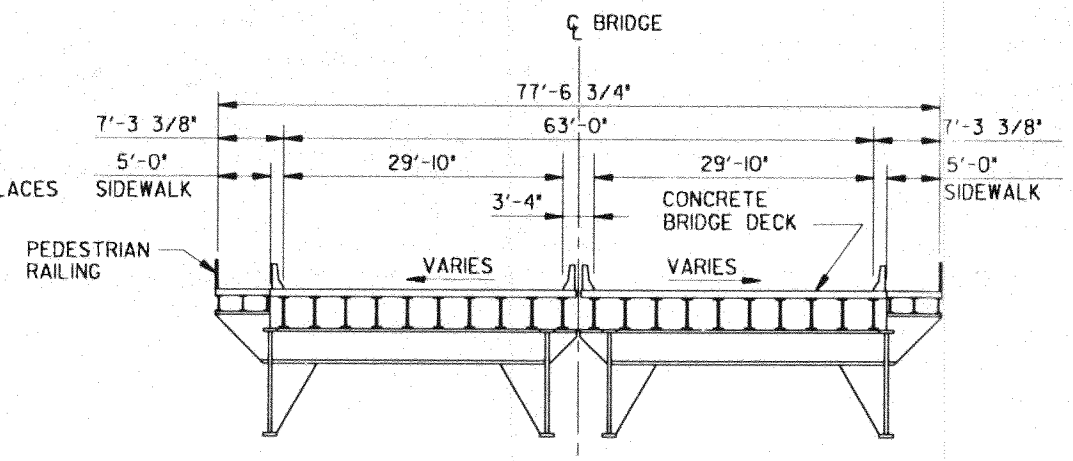

SECTION (C 61 62)

SCALE: 1" = 10'-0"

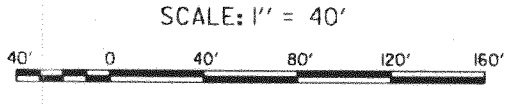

SCALE: 1" = 40'

MISSISSIPPI RIVER - GULF OUTLET
NEW LOCK AND CONNECTING CHANNELS
(INDUSTRIAL CANAL LOCK REOLACEMENT)
FEASIBILITY STUDY
NORTH OF CLAIBORNE AVE.

BRIDGE DETAILS
ST. CLAUDE AVE. BRIDGE REPLACEMENT

U.S. ARMY ENGINEER DISTRICT, NEW ORLEANS
CORPS OF ENGINEERS
NEW ORLEANS, LOUISIANA

DESIGNED BY:	MHG	PLOT SCALE: 480	PLOT DATE: X	CADD FILE:	FSSTCLA2.DGN
DRAWN BY:	HAT			FILE NO.	H-2-40392
CHECKED BY:	AOS	DATE: NOVEMBER 1994			

PLATE B-62

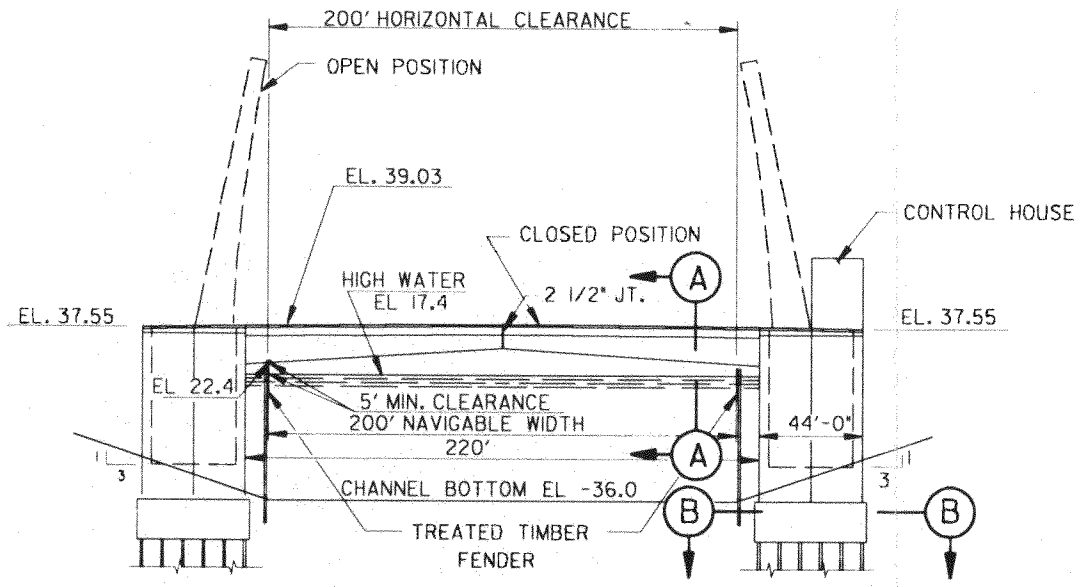

ELEVATION

LOW LEVEL FOUR LEAF BASCULE BRIDGE

SCALE: 1" = 40'-0"

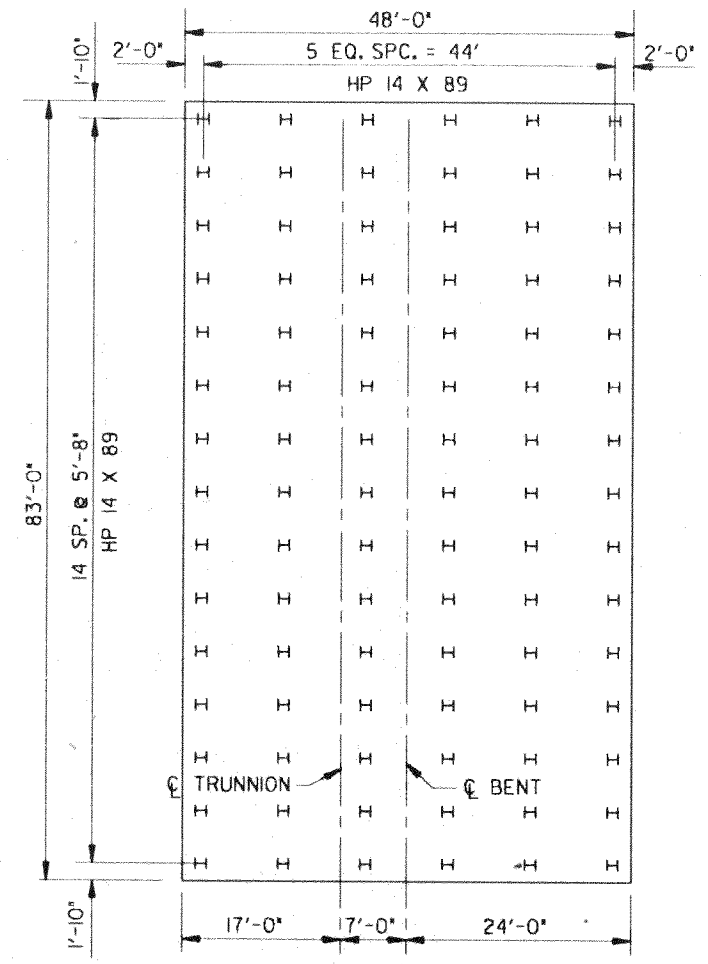

SECTION (B)

FOUNDATION PLAN

SCALE: 1" = 10'-0"

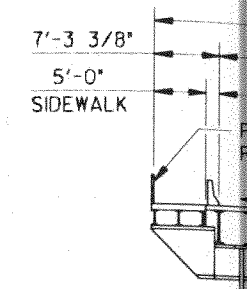

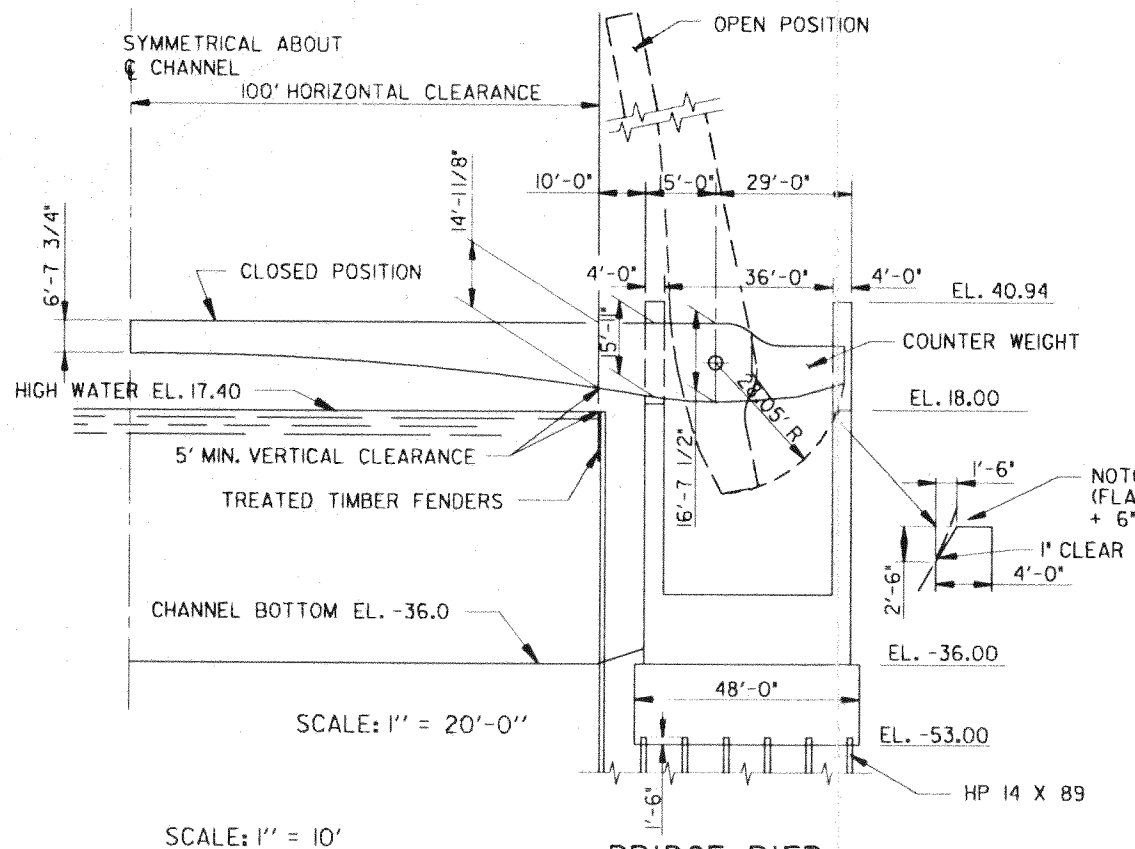

SCALE: 1" = 20'-0"

BRIDGE PIER

SCALE: 1" = 20'-0"

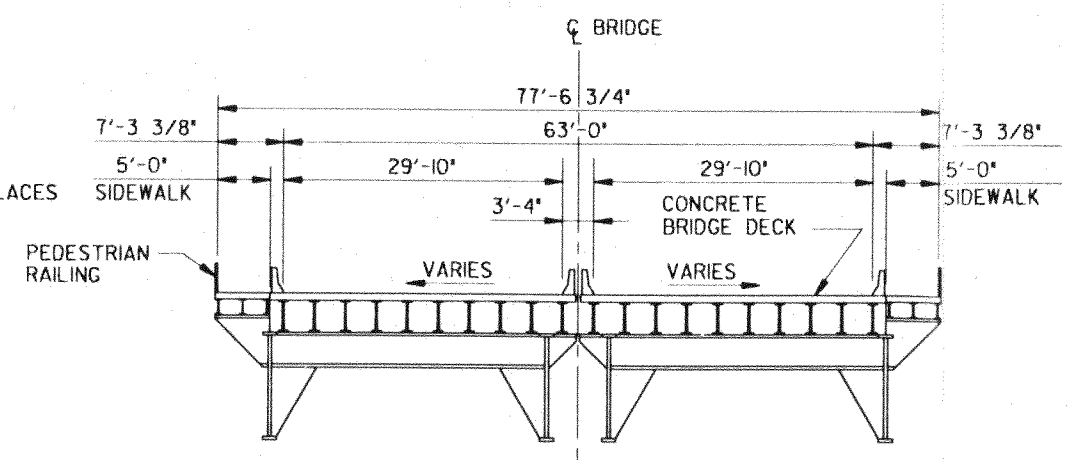

SECTION (C 61|62)

SCALE: 1" = 10'-0"

SCALE: 1" = 10'

10' 0 10' 20' 30' 40'

SCALE: 1" = 20'

20' 0 20' 40' 60' 80'

SCALE: 1" = 40'

40' 0 40' 80' 120'

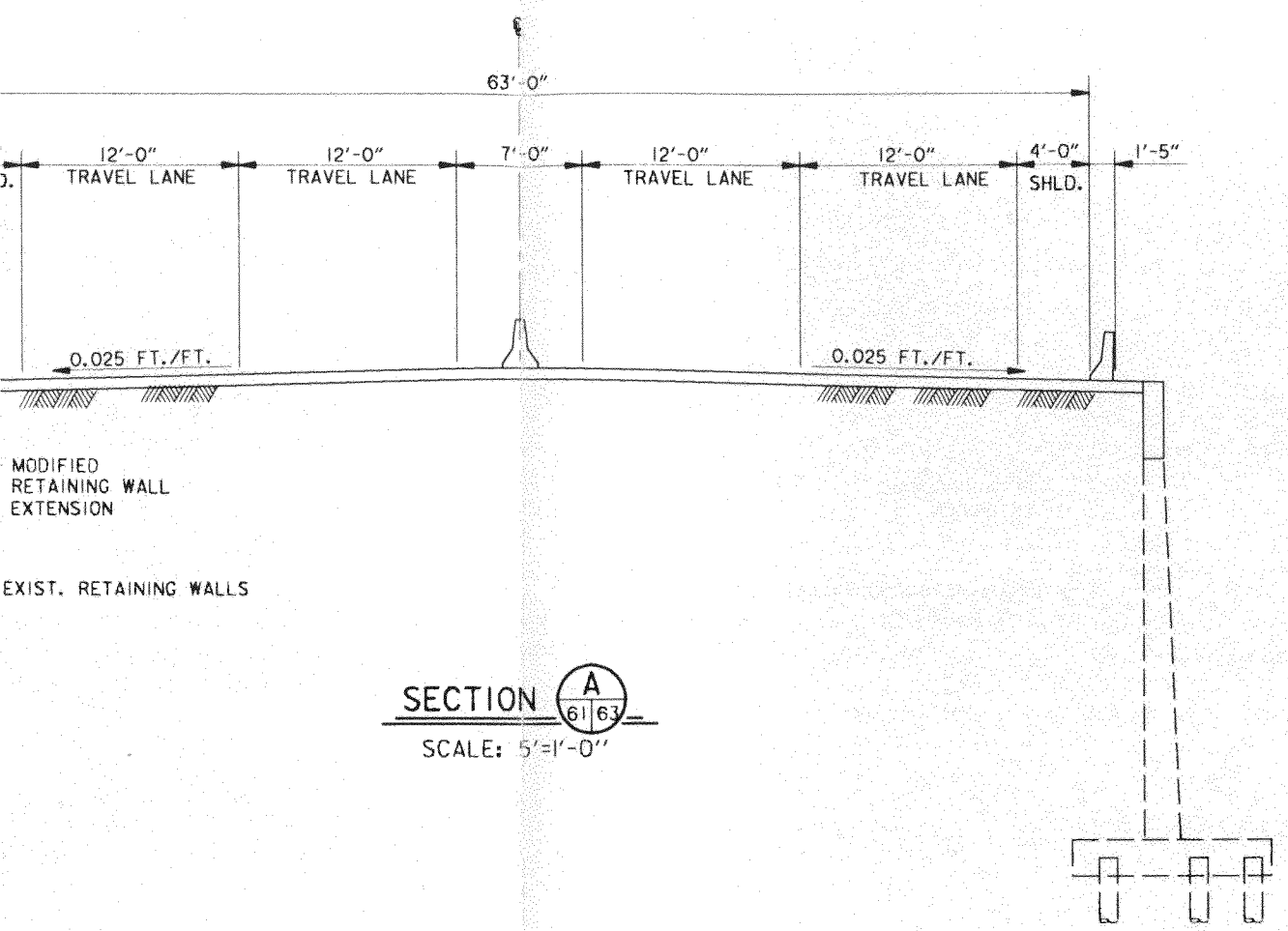

SECTION A (61 | 63)

SCALE: 5'=1'-0"

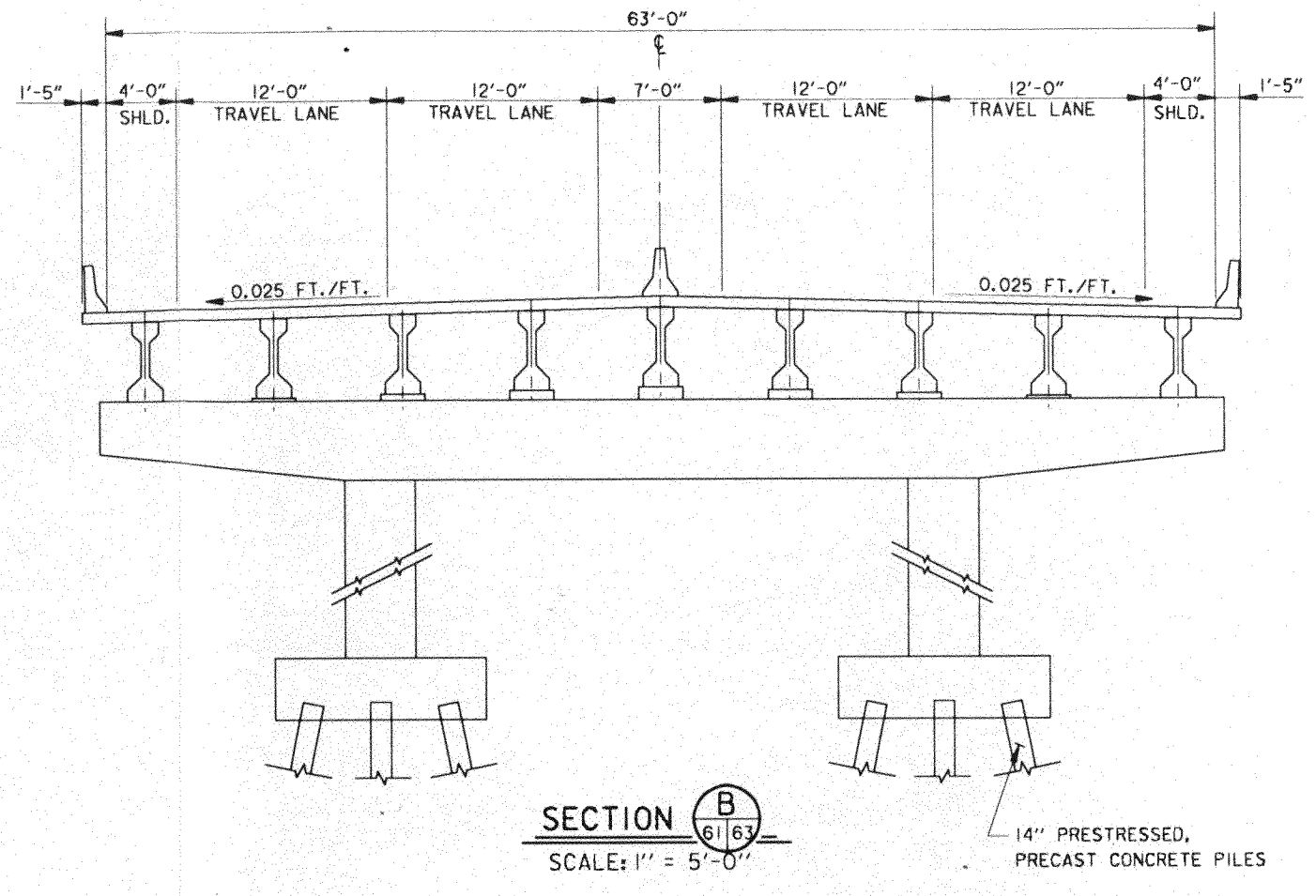

SECTION B (61 | 63)

SCALE: 1" = 5'-0"

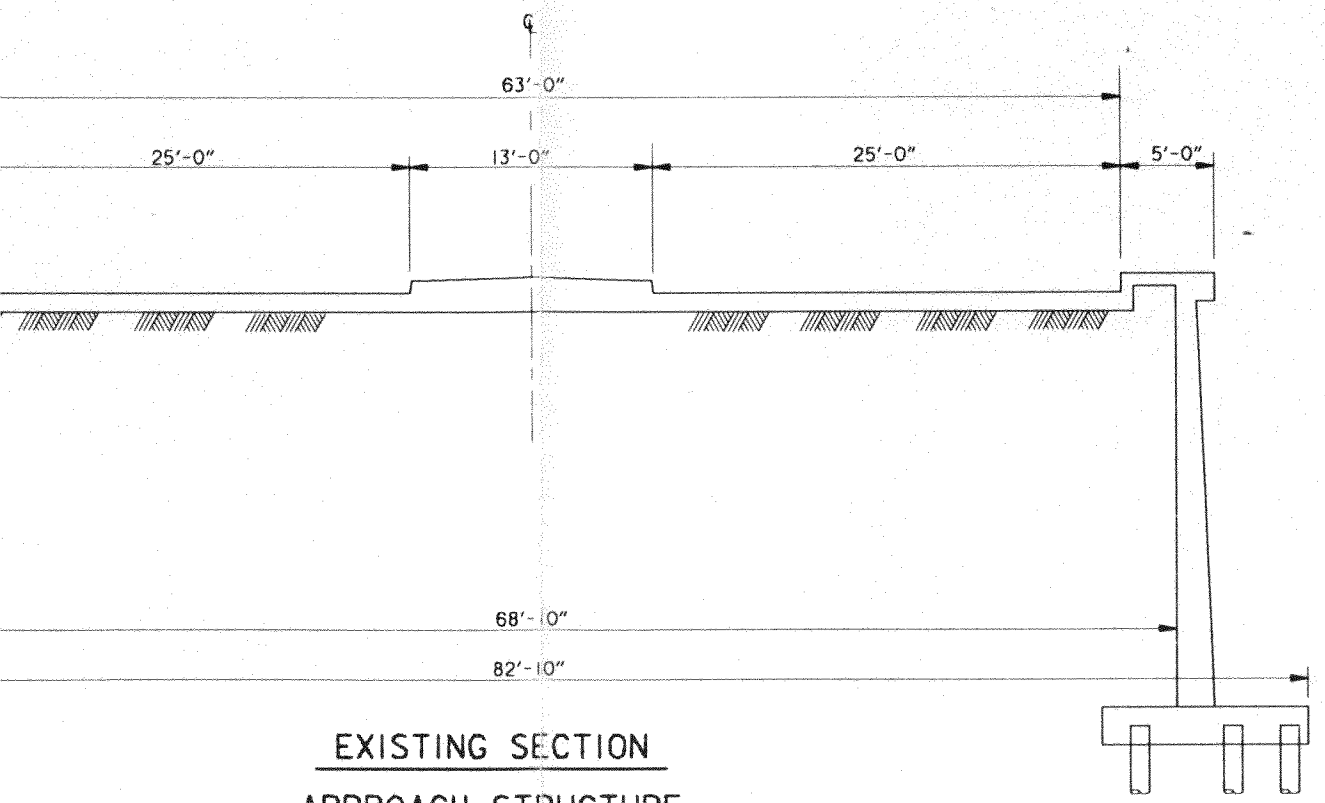

EXISTING SECTION

APPROACH STRUCTURE

SCALE: 1" = 5'-0"

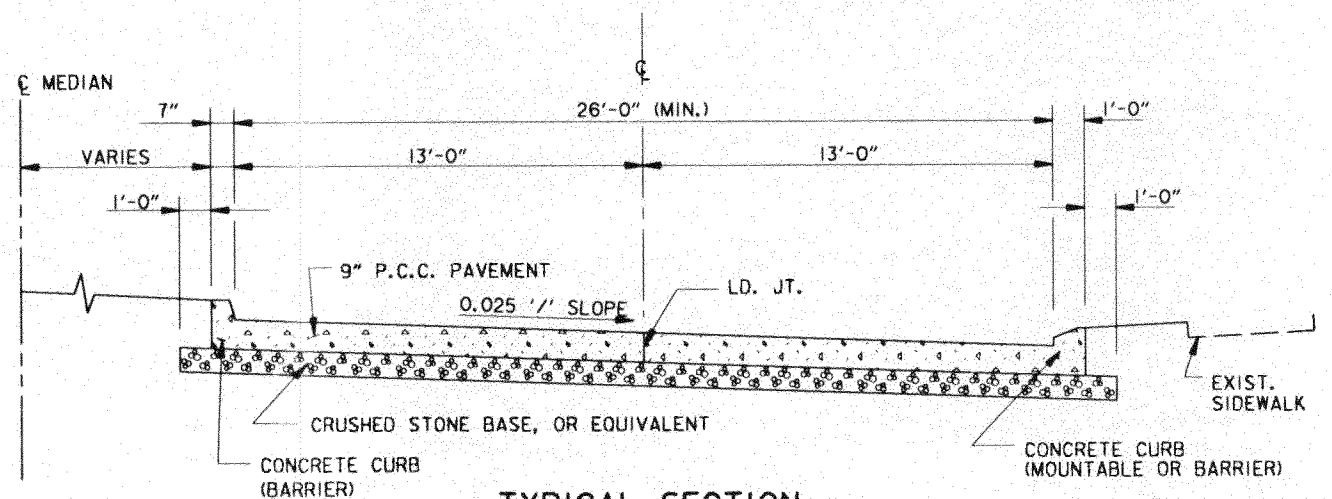

TYPICAL SECTION

AT - GRADE ROADWAY

SCALE: 1" = 3' -0"

SCALE: 3" = 1' - 0"

12" 0 1'

SCALE: 1" = 5'

5' 0 5' 10' 15' 20'

MISSISSIPPI RIVER - GULF OUTLET
NEW LOCK AND CONNECTING CHANNELS
(INDUSTRIAL CANAL LOCK REPLACEMENT)
FEASIBILITY STUDY
NORTH OF CLAIBORNE AVE. SITE

APPROACH RAMP SECTIONS
ST. CLAUDE AVE. BRIDGE REPLACEMENT

U.S. ARMY ENGINEER DISTRICT, NEW ORLEANS
CORPS OF ENGINEERS
NEW ORLEANS, LOUISIANA

DESIGNED BY: MHG	PLOT SCALE: 60	PLOT DATE: X	CADD FILE: FSSTCLA3.DGN	
DRAWN BY: HAT			FILE NO. H-2-40392	
CHECKED BY: ADS	DATE: NOVEMBER 1994			

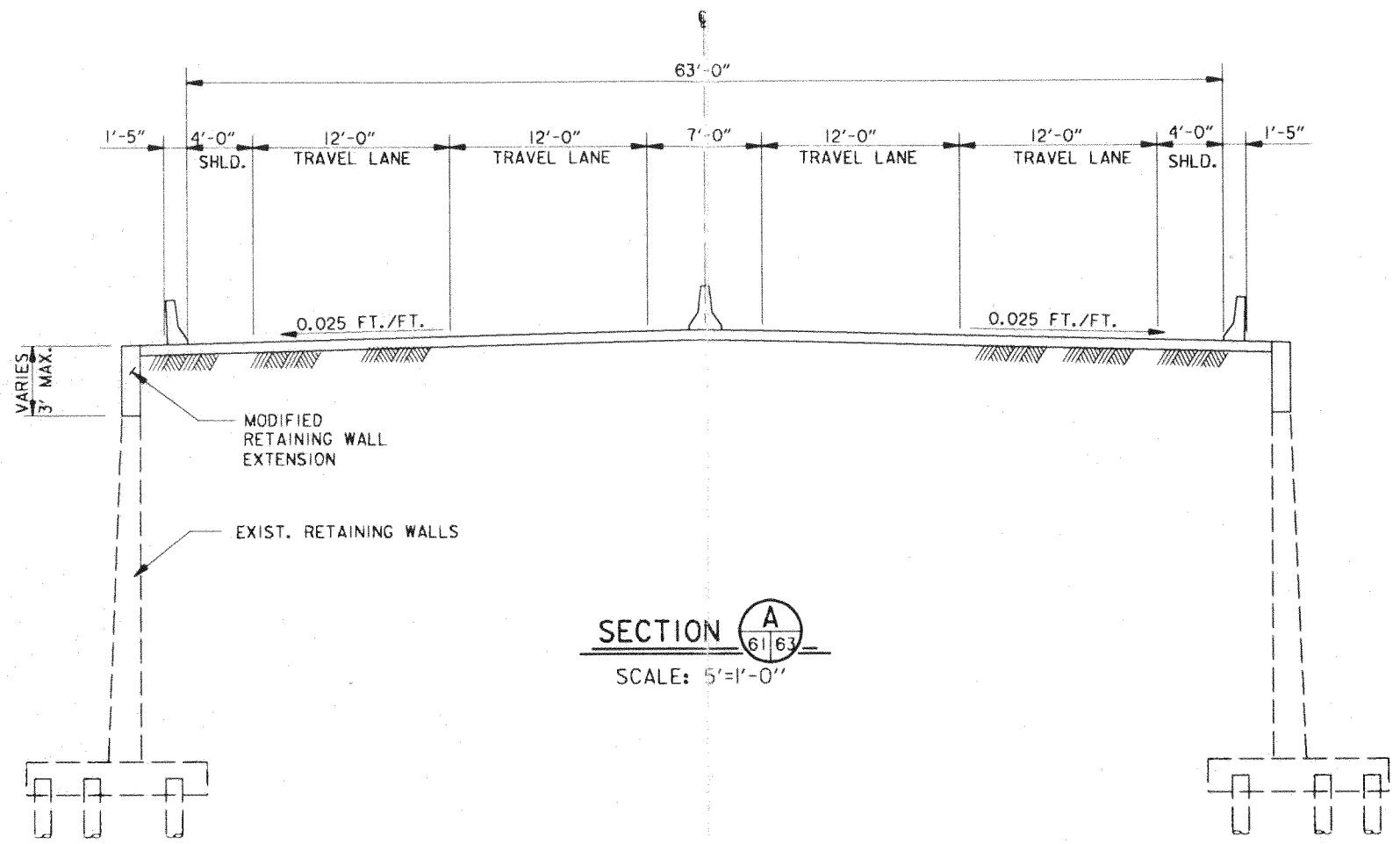

SECTION A (61 | 63)

SCALE: 5'=1'-0"

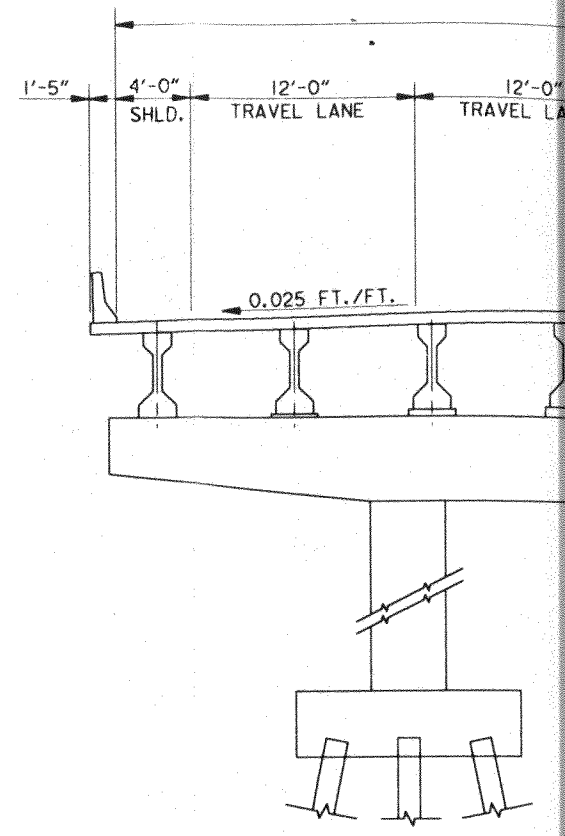

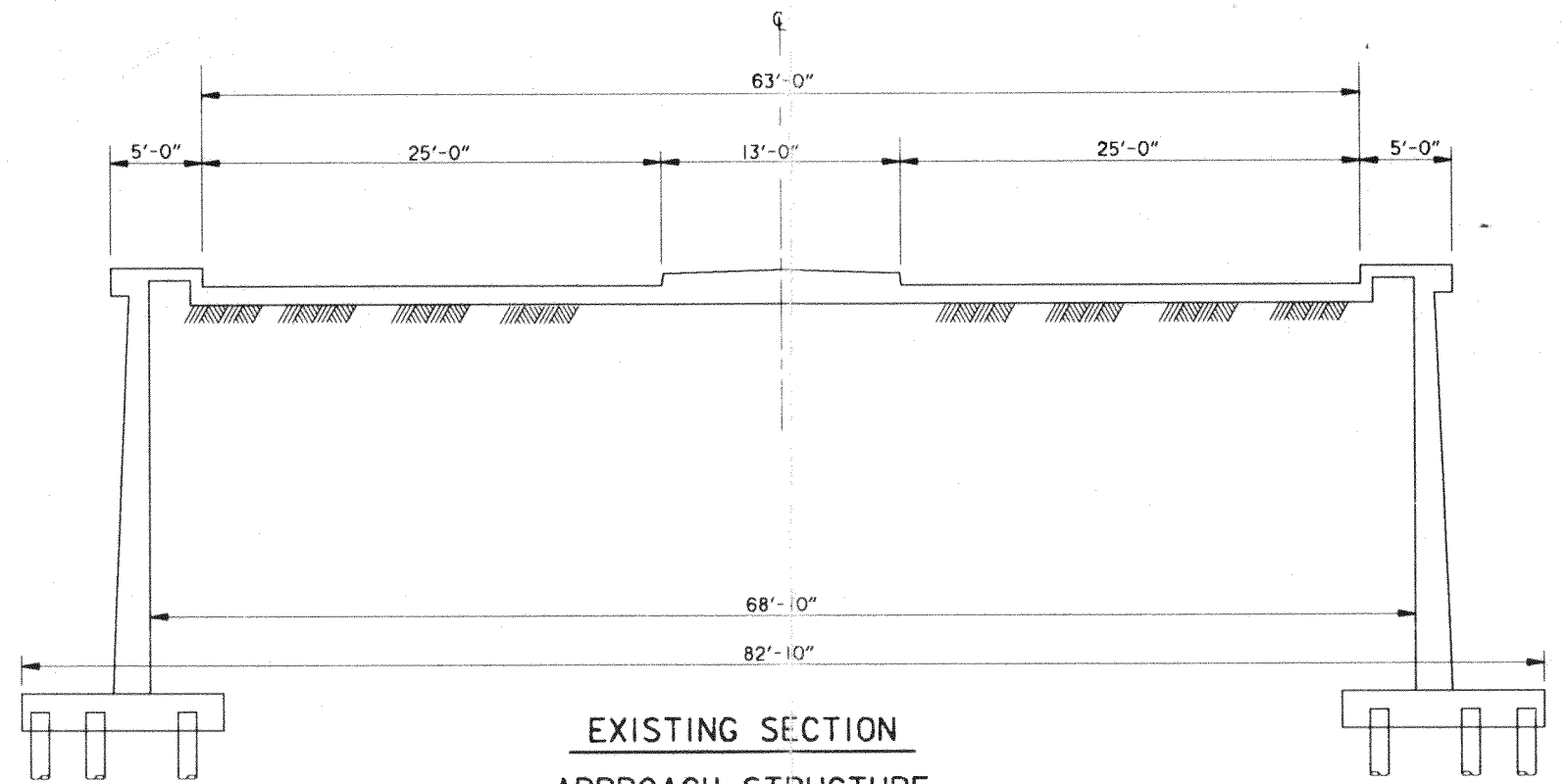

EXISTING SECTION

APPROACH STRUCTURE

SCALE: 1" = 5'-0"

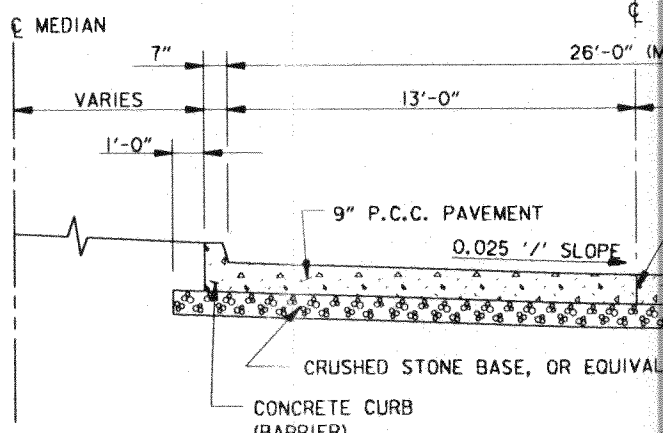

TYPICAL S

AT - GRADE

SCALE: 1" =

SCALE: 3" = 1' - 0"

12" 0 1'

SCAL

5' 0 5'

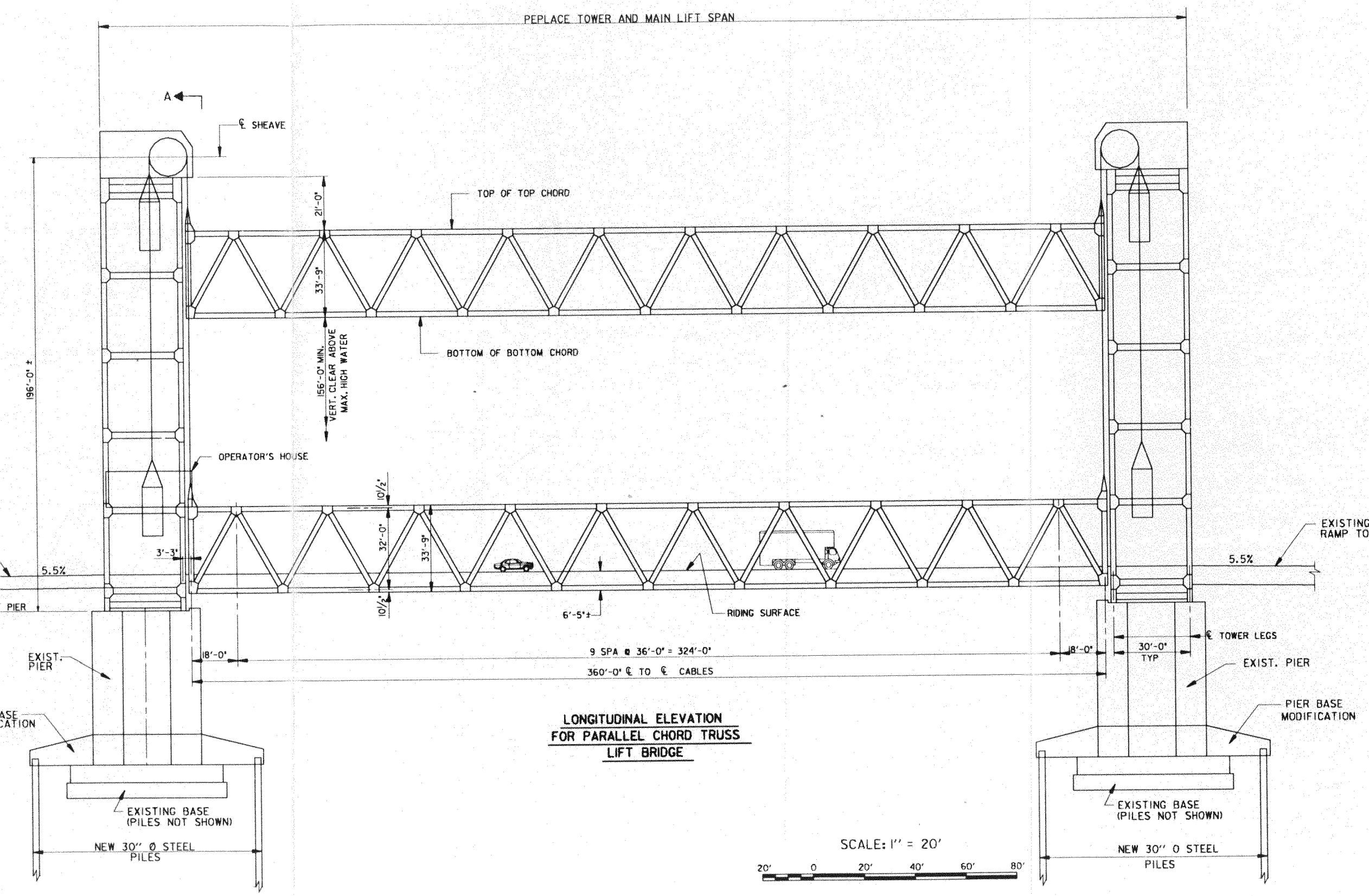

LONGITUDINAL ELEVATION FOR PARALLEL CHORD TRUSS LIFT BRIDGE

MISSISSIPPI RIVER - GULF OUTLET
NEW LOCK AND CONNECTING CHANNELS
(INDUSTRIAL CANAL LOCK REPLACEMENT)
FEASIBILITY STUDY
NORTH OF CLAIBORNE AVE. SITE

CLAIBORNE AVENUE MAIN SPAN SUPER STRUCTURE REPLACEMENT

U.S. ARMY ENGINEER DISTRICT, NEW ORLEANS
CORPS OF ENGINEERS
NEW ORLEANS, LOUISIANA

DESIGNED BY: MHG	PLOT SCALE: 240	PLOT DATE: X	CADD FILE: CNCPCA01.DGN	
DRAWN BY: HAT			FILE NO. H-2-40392	
CHECKED BY: ADS	DATE: NOVEMBER 1994			

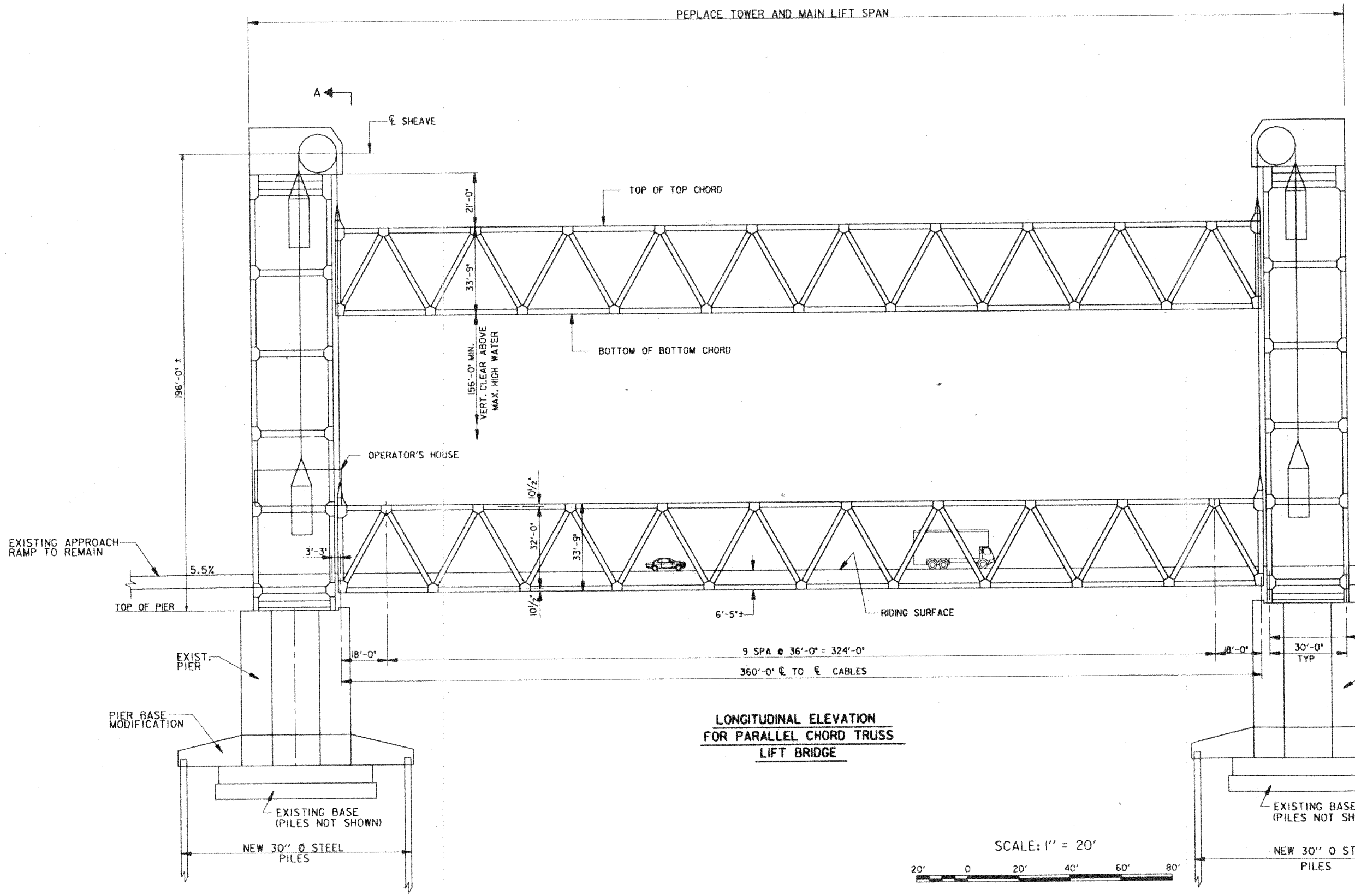

LONGITUDINAL ELEVATION FOR PARALLEL CHORD TRUSS LIFT BRIDGE

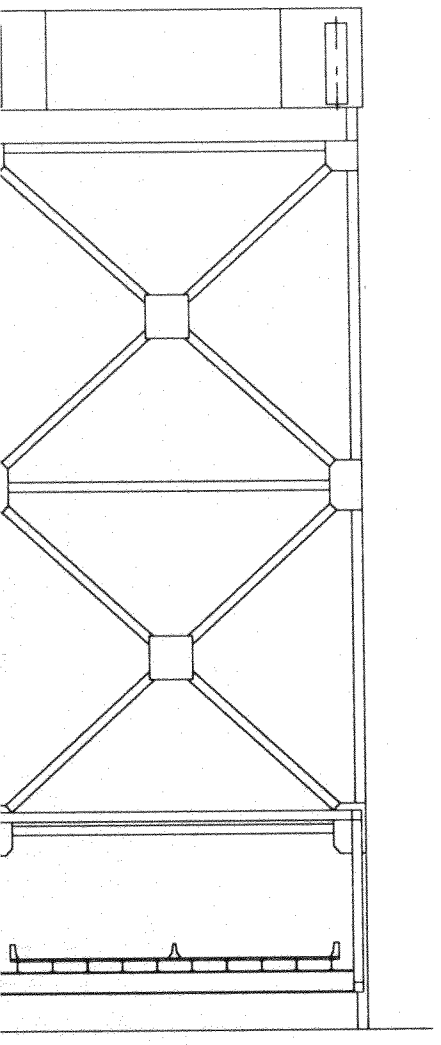

SECTION A-A
SCALE: 3/16" = 1'-0"

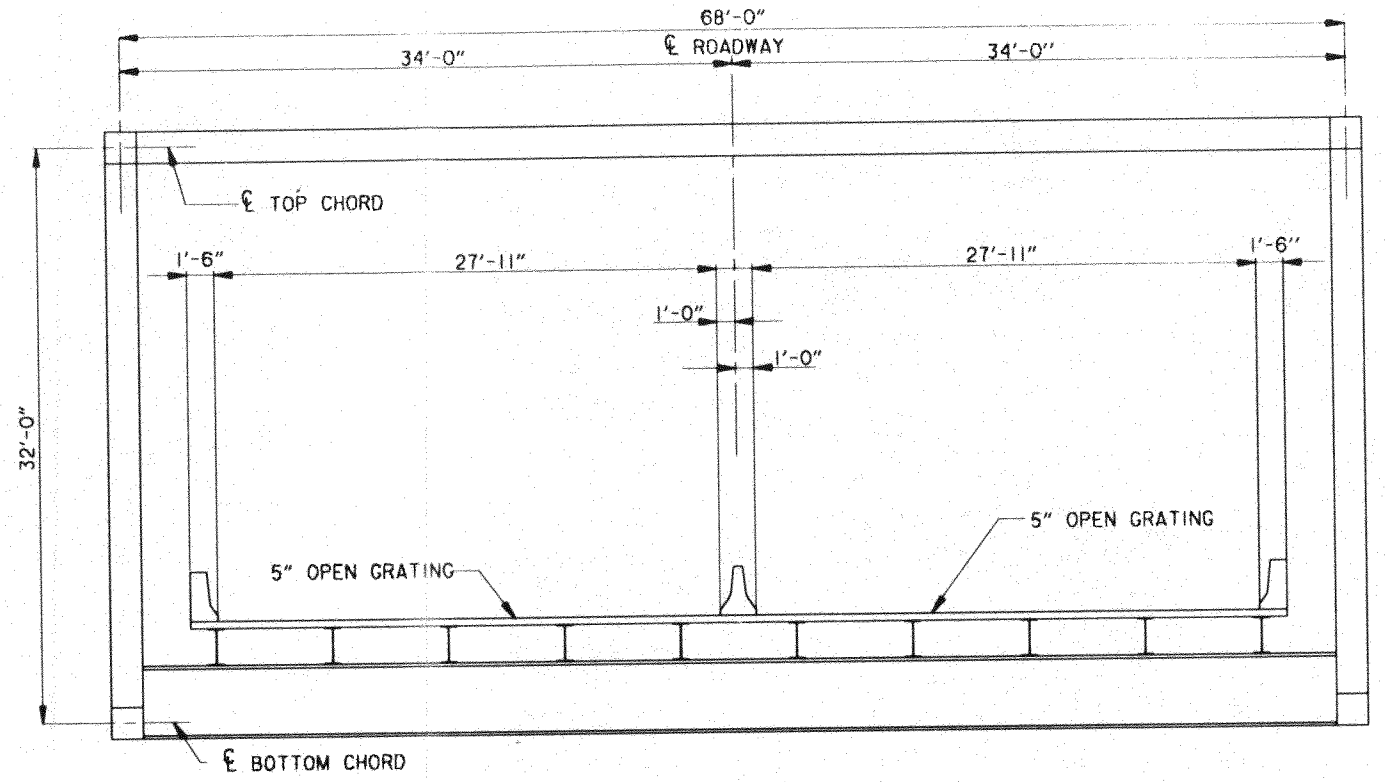

MOVABLE MAIN SPAN
SCALE: 3/16" = 1'-0"

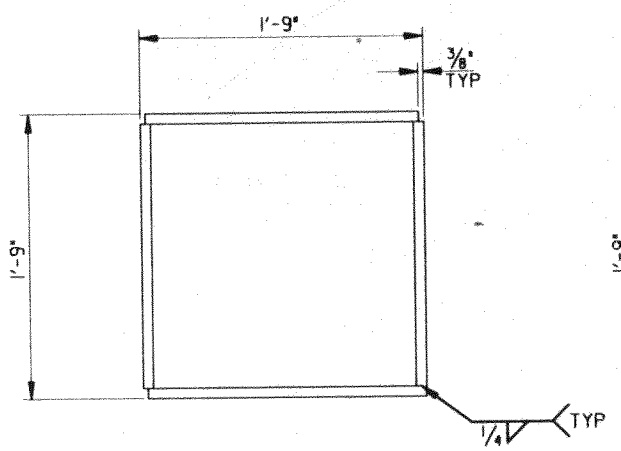

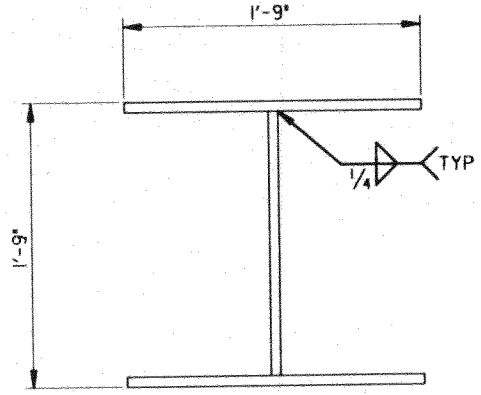

ALL MATERIAL 3/4" PLATE

SECTION THRU TOP AND BOTTOM CHORDS
SCALE: 3/16" = 1'-0"

SECTION THRU DIAGONAL BRACING
SCALE: 3/16" = 1'-0"

SCALE: 3/16" = 1'- 0"
12" 0 5' 10' 15' 20'

MISSISSIPPI RIVER - GULF OUTLET
NEW LOCK AND CONNECTING CHANNELS
(INDUSTRIAL CANAL LOCK REPLACEMENT)
FEASIBILITY STUDY
NORTH OF CLAIBORNE AVE. SITE

MAIN SPAN - CROSS SECTION
CLAIBORNE AVE. BRIDGE REPLACEMENT

U.S. ARMY ENGINEER DISTRICT, NEW ORLEANS
CORPS OF ENGINEERS
NEW ORLEANS, LOUISIANA

DESIGNED BY: MHG	PLOT SCALE: 64	PLOT DATE: X	CADD FILE: CNCPCA02.DGN	
DRAWN BY: HAT			FILE NO. H-2-40392	
CHECKED BY: AOS		DATE: NOVEMBER 1994		

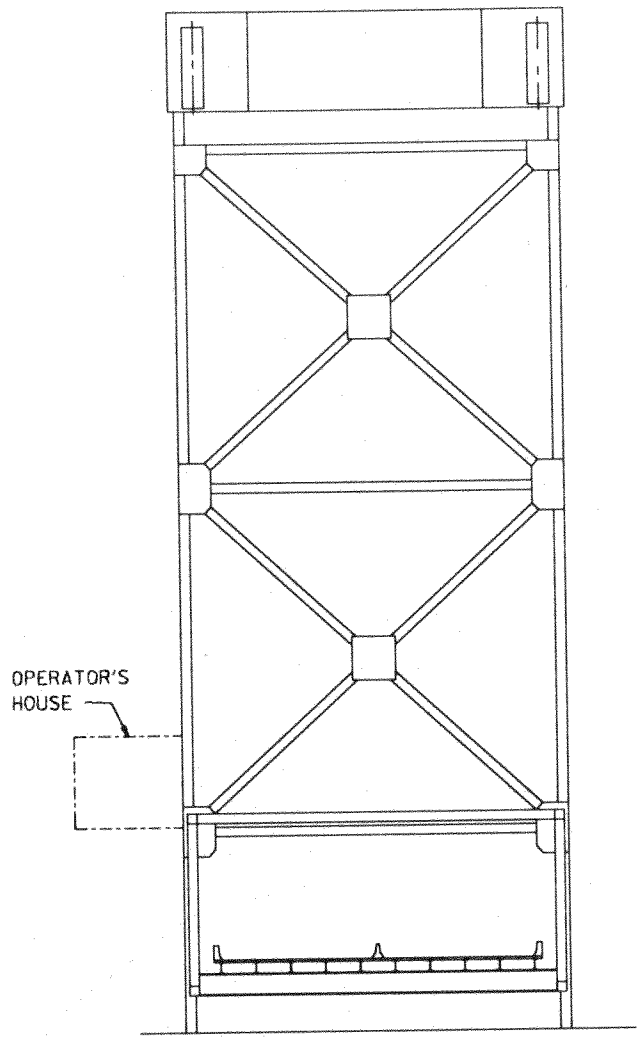

SECTION A-A
SCALE: 3/16"=1'-0"

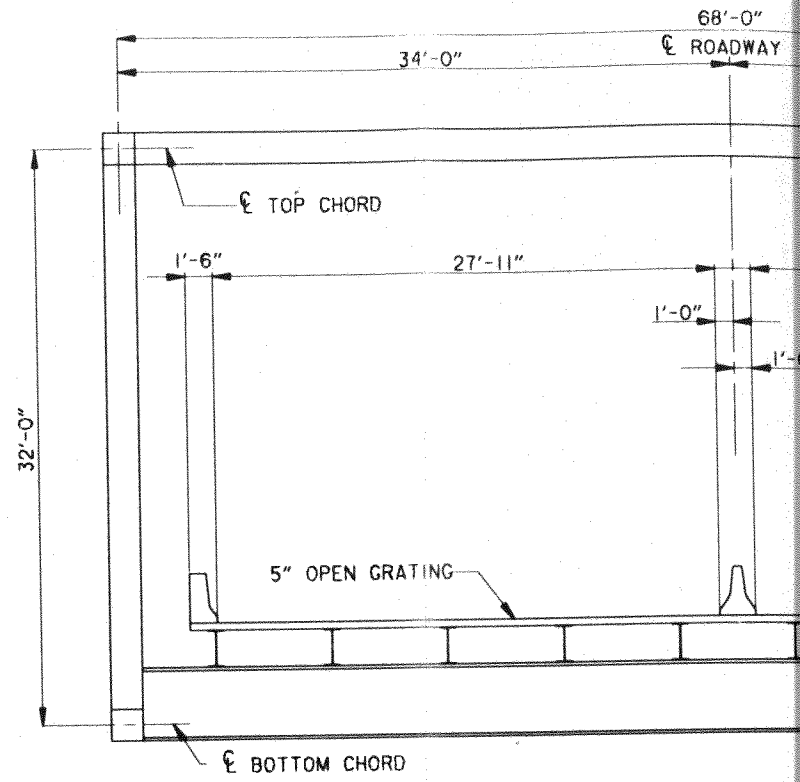

MOVABLE MAIN
SCALE: 3/16" =1'-0

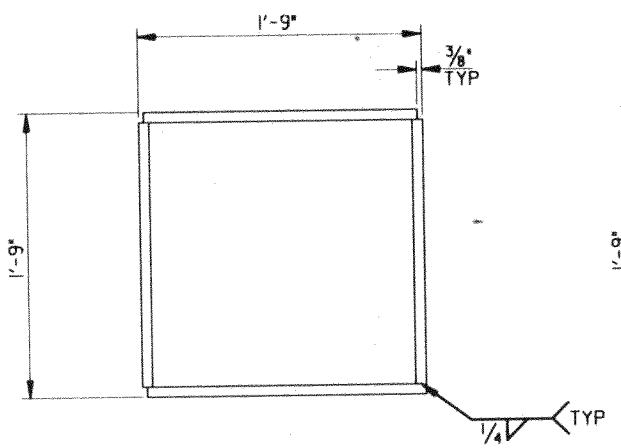

ALL MATERIAL 3/4" PLATE

SECTION THRU TOP
AND BOTTOM CHORDS
SCALE: 3/16"=1'-0"

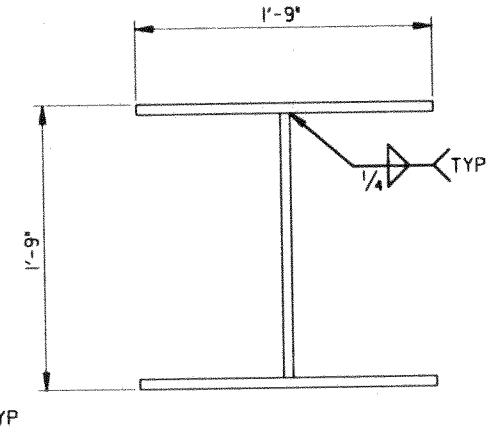

SECTION THRU
DIAGONAL BRACING
SCALE: 3/16"=1'-0"

SCALE: 3/16" = 1'
12" 0 5' 10'

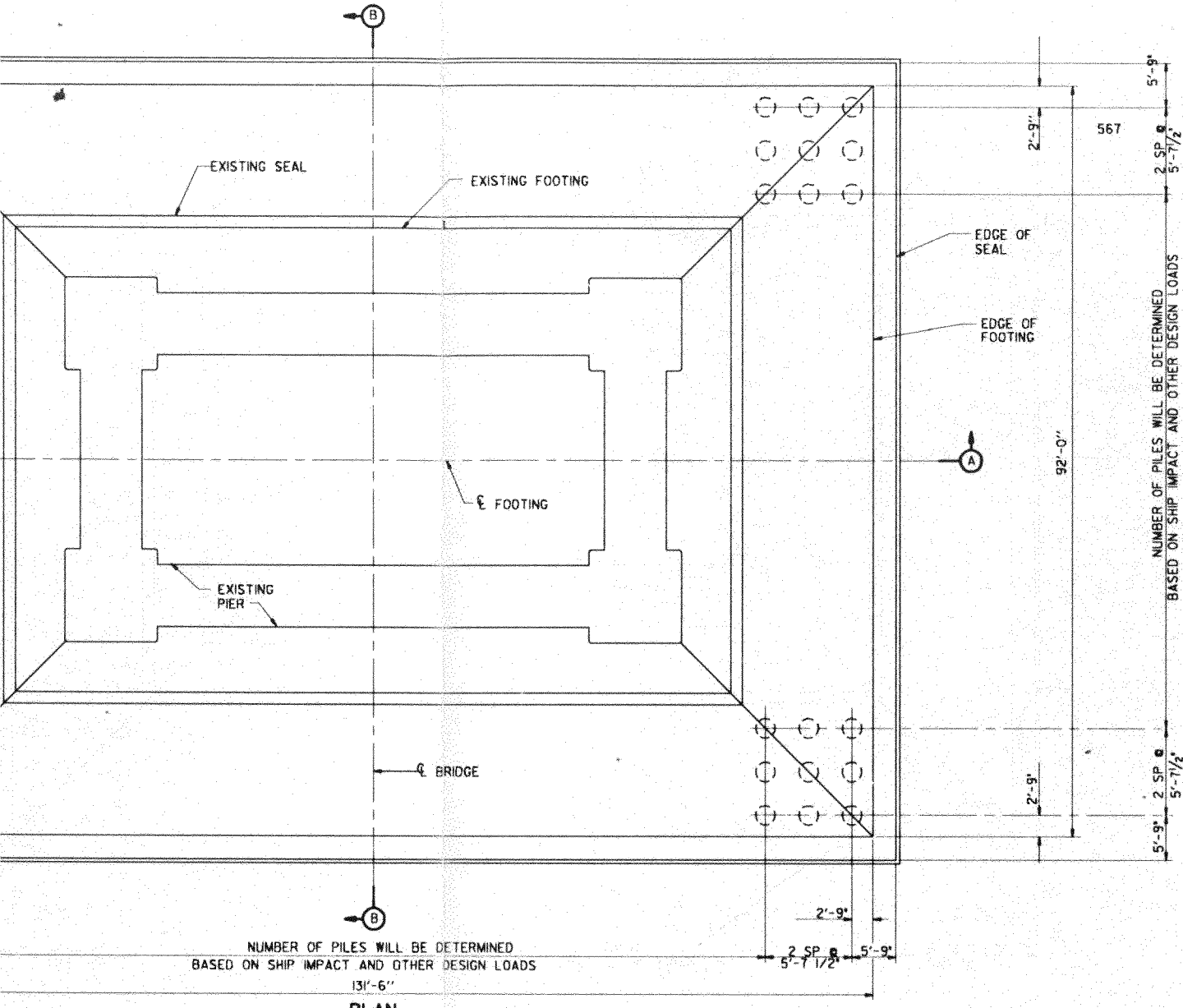

PLAN
SCALE: 1/16"=1'-0"

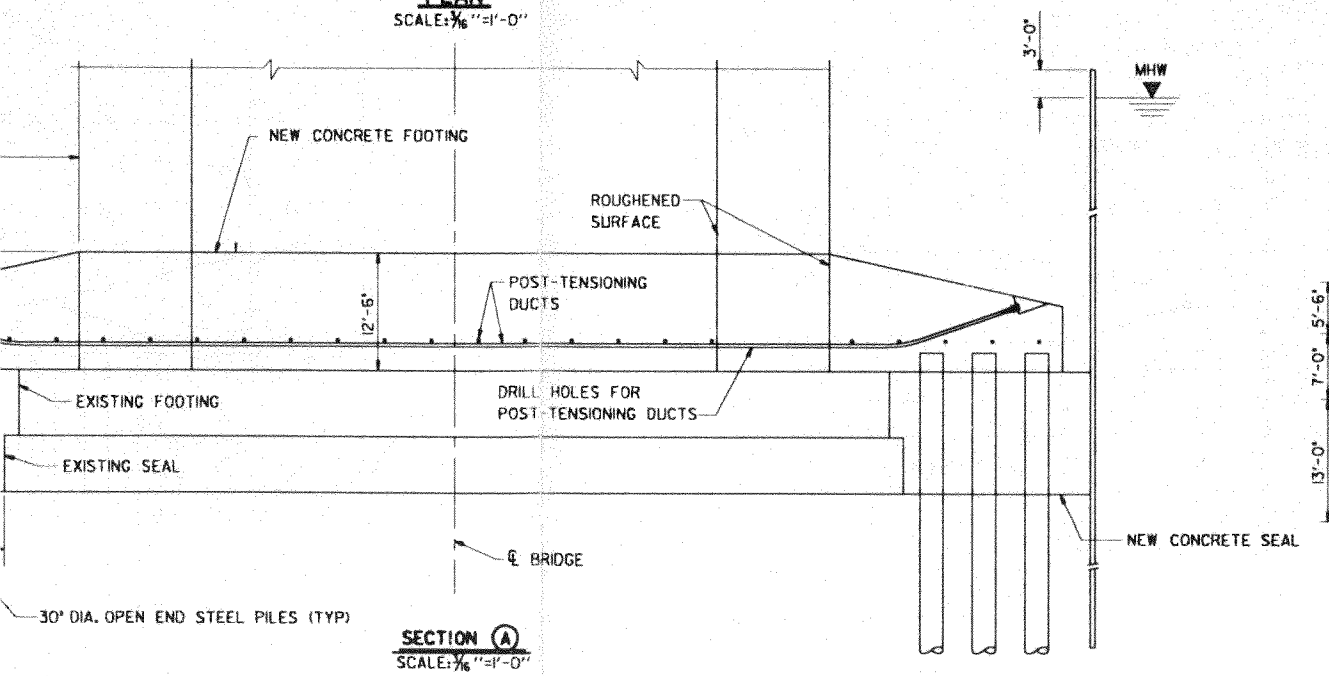

SECTION (A)
SCALE: 1/16"=1'-0"

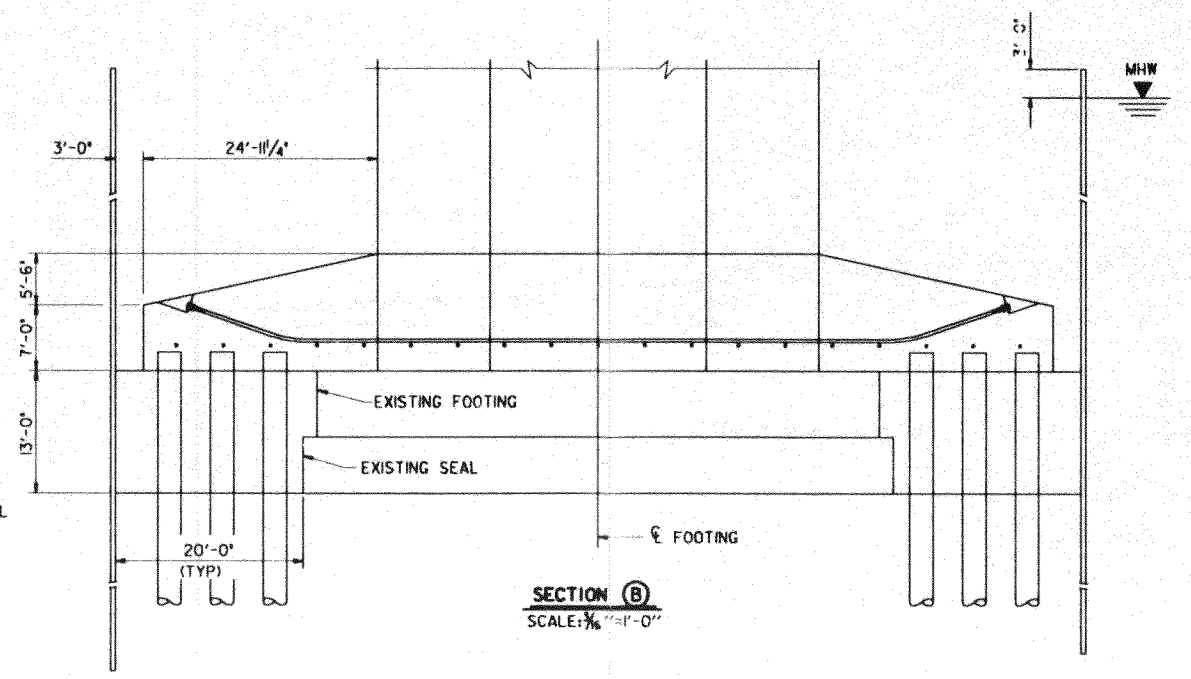

SECTION (B)
SCALE: 1/16"=1'-0"

NOTES:

1. THE RETROFITTED FOOTING WILL CARRY THE EXISTING LOADS AS WELL AS ANY ADDITIONAL LOADS FROM THE PROPOSED SUPERSTRUCTURE.

2. PILE SPACING AND ORIENTATION TO BE DETERMINED BASED ON RESULTS OF ENGINEERING ANALYSIS. CONSIDERATION WILL BE GIVEN TO BATTERED PILES OR REARRANGEMENT OF PILES BASED ON CRITICAL LOADING CONDITIONS. THE COST ESTIMATE INCLUDES 18,480 LF OF PILING BENEATH EACH PIER.

MISSISSIPPI RIVER - GULF OUTLET
NEW LOCK AND CONNECTING CHANNELS
(INDUSTRIAL CANAL LOCK REPLACEMENT)
FEASIBILITY STUDY
NORTH OF CLAIBORNE AVE. SITE

PIER RETROFIT
CLAIBORNE AVE. BRIDGE REPLACEMENT

U.S. ARMY ENGINEER DISTRICT, NEW ORLEANS
CORPS OF ENGINEERS
NEW ORLEANS, LOUISIANA

DESIGNED BY: MHG	PLOT SCALE: 120	PLOT DATE: X	CADD FILE: CNCPCA04.DGN	
DRAWN BY: HAT			FILE NO. H-2-40392	
CHECKED BY: ADS	DATE: NOVEMBER 1994			

PLATE D-23

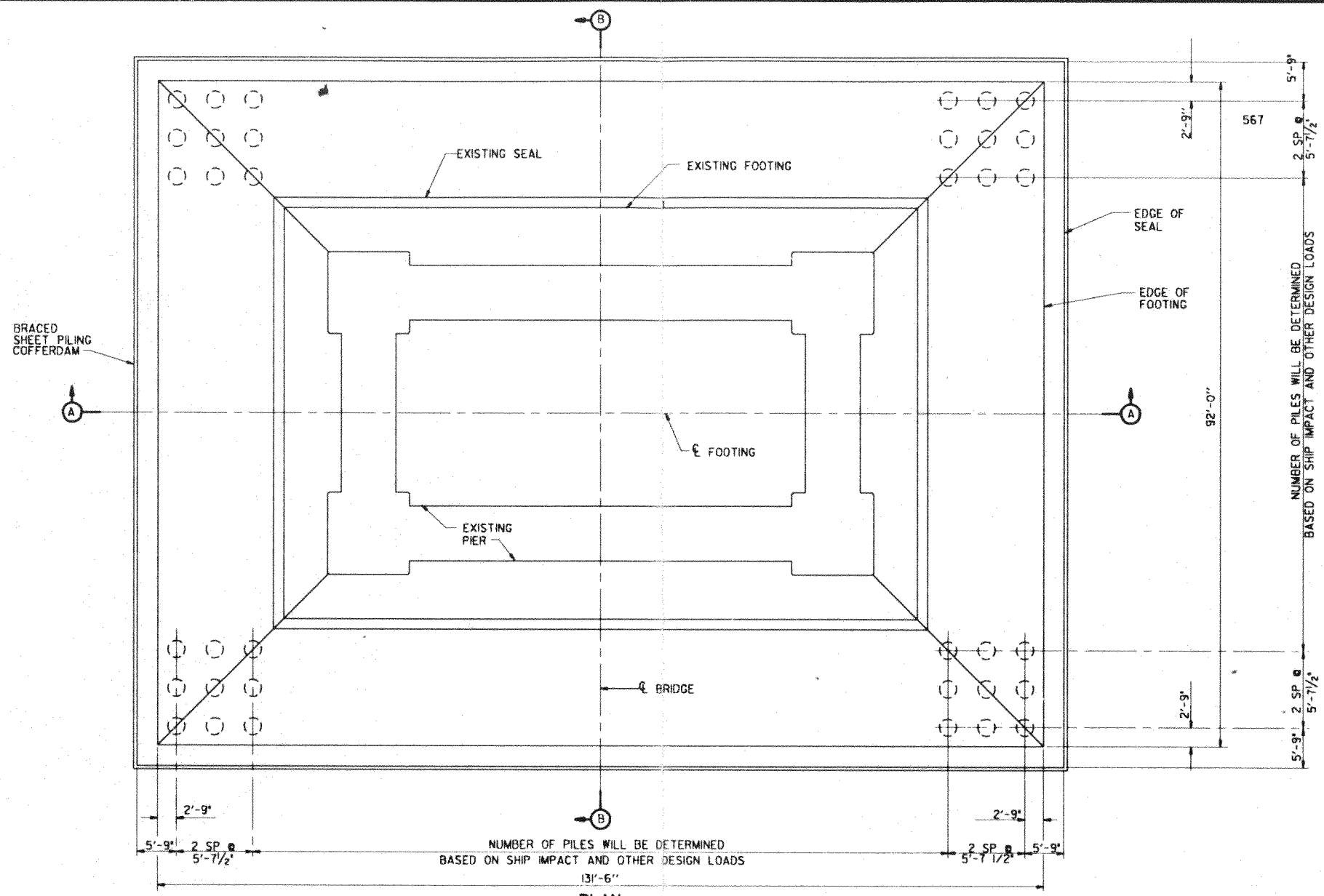

PLAN
SCALE: 1/16" = 1'-0"

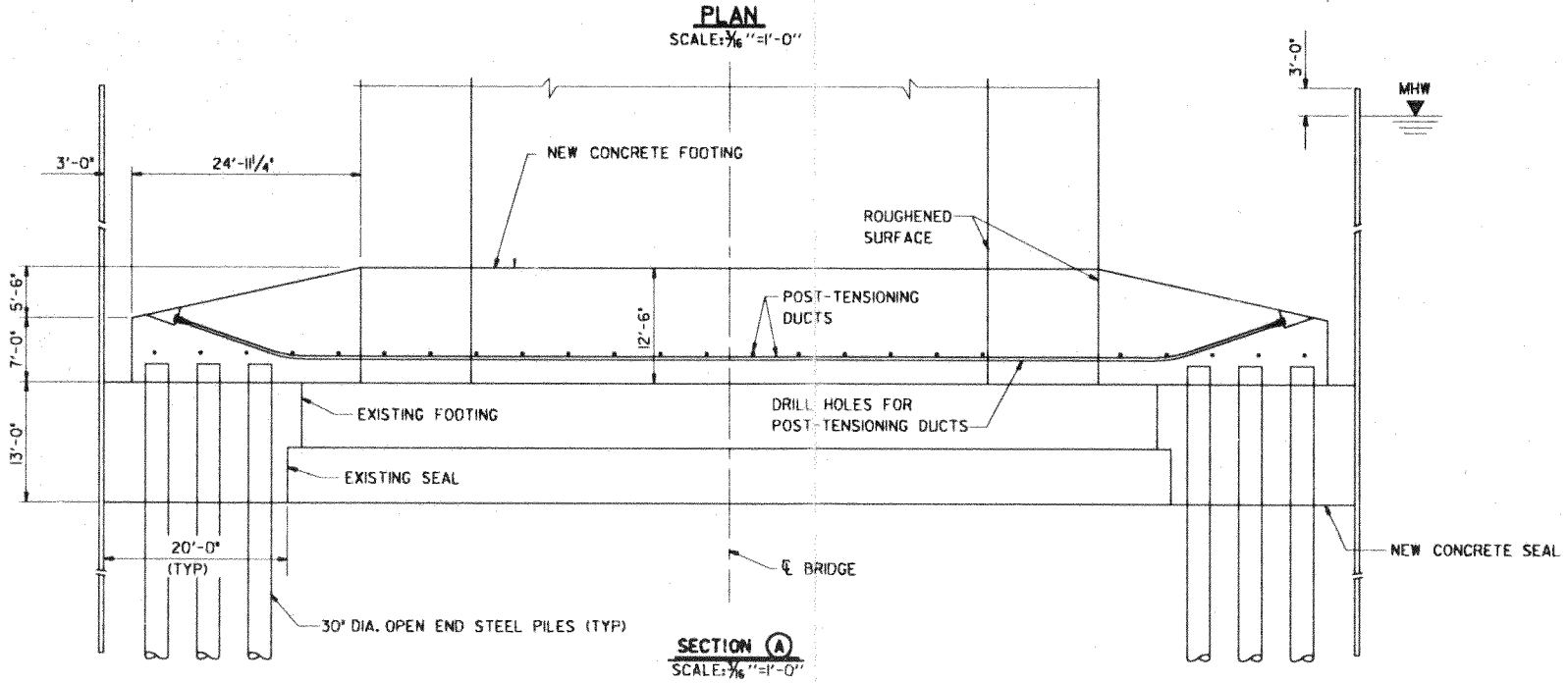

SECTION (A)
SCALE: 1/16" = 1'-0"

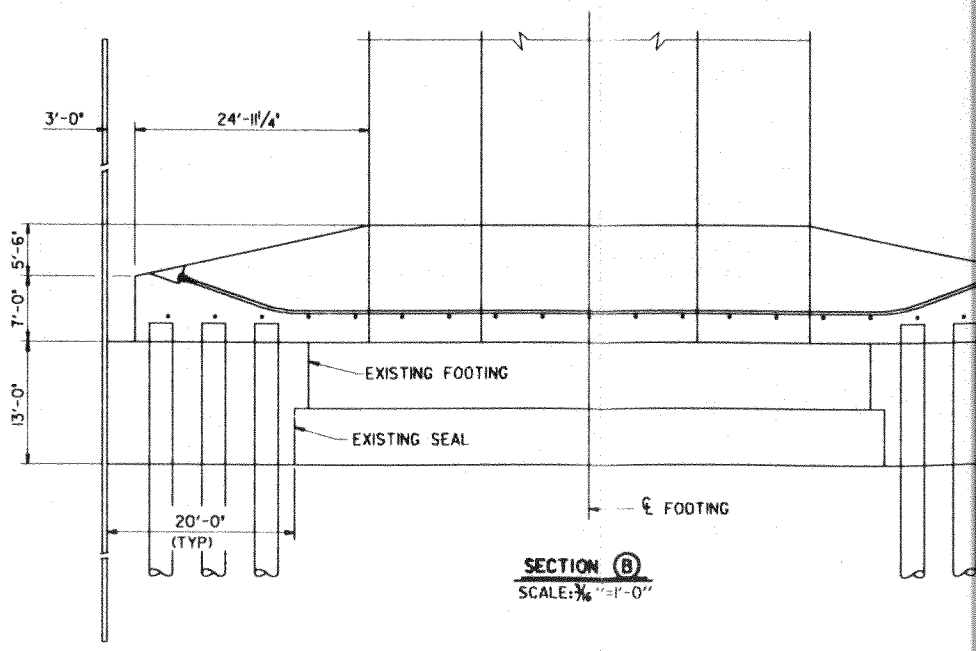

SECTION (B)
SCALE: 1/16" = 1'-0"

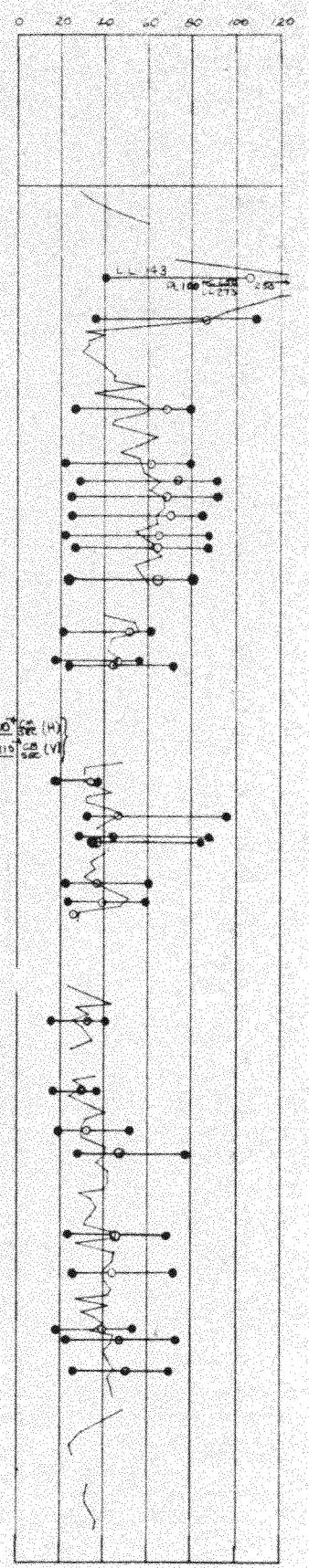
WATER CONTENT
(PERCENT DRY WEIGHT)
0 20 40 60 80 100 120
LL=43
PL=27
B/L
2.0
Gr
Gr&Br
Gr&Gr
Gr
Gr
Gr
Gr&Gr
Gr
Gr
Gr&Br
Gr&Br
Gr
Gr
Gr
Gr

BOR. 2-UL
STA. 14+20
135 FT. EAST B/L

9-19 JULY 68

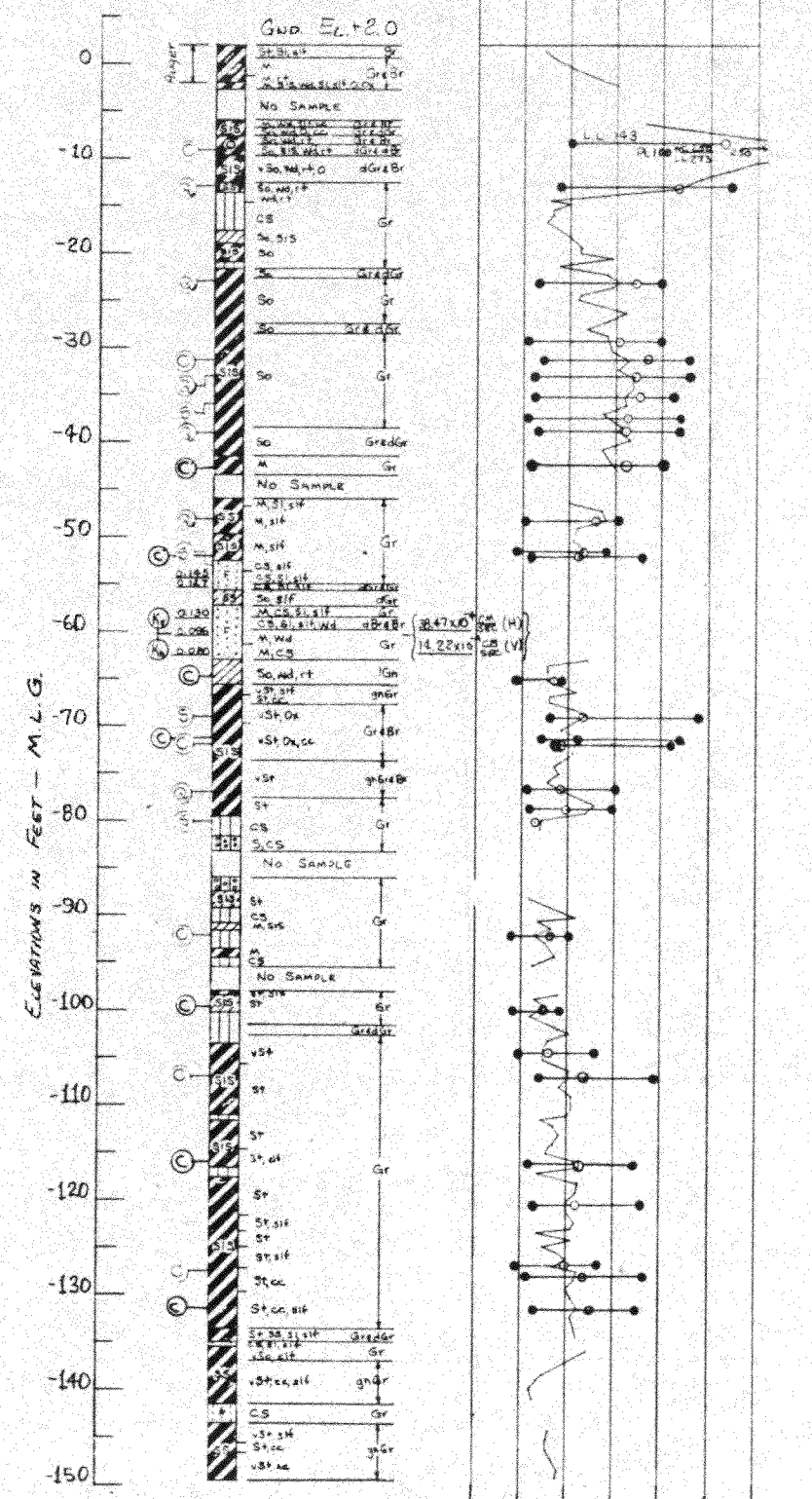

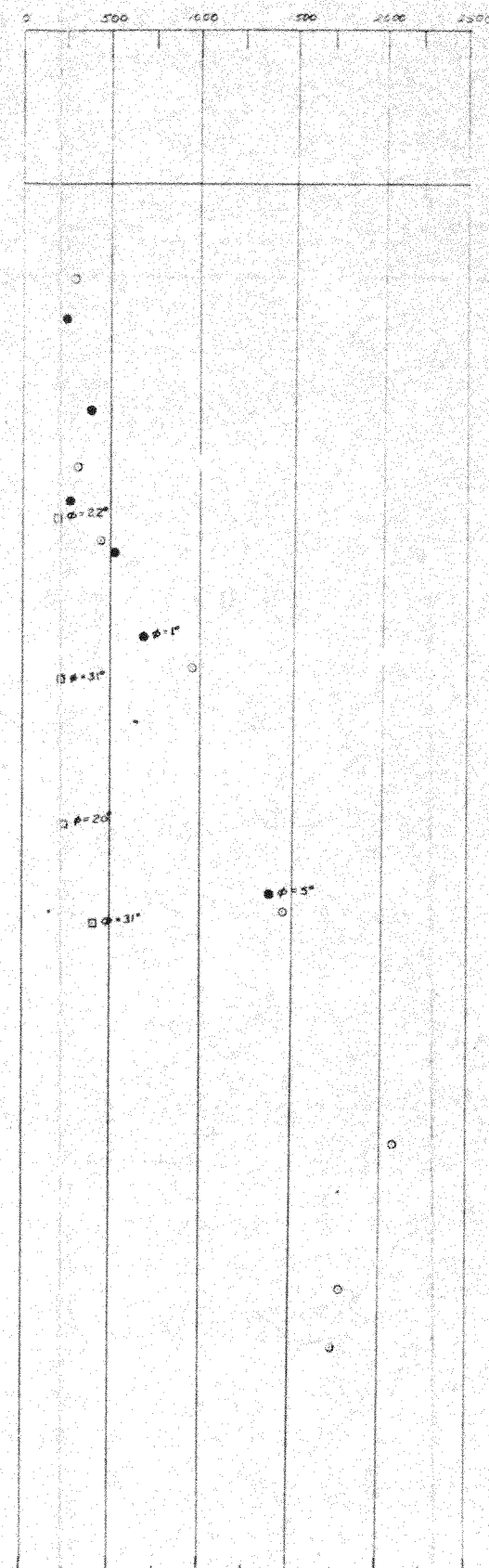



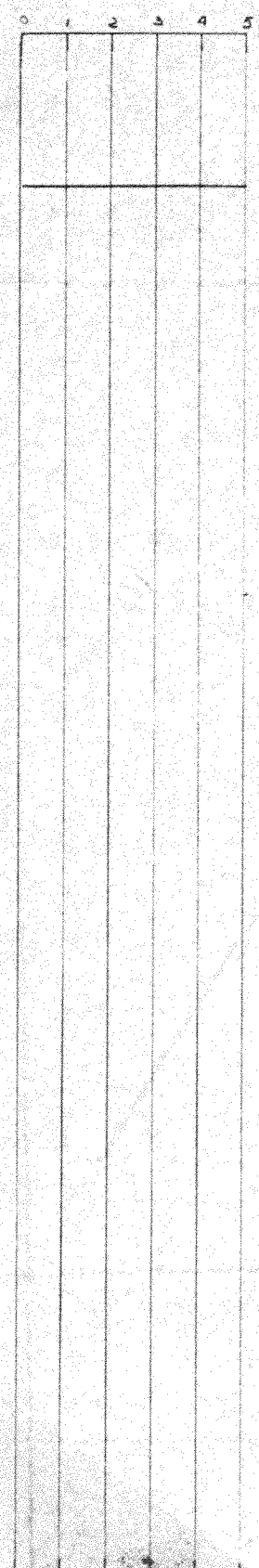

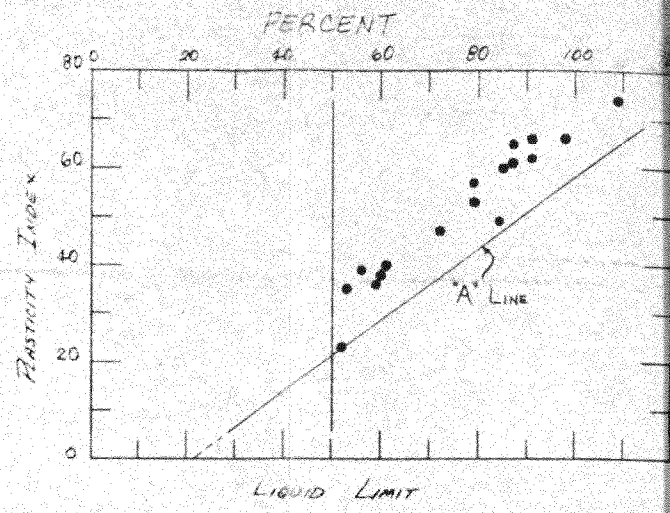

PLASTICITY CHART

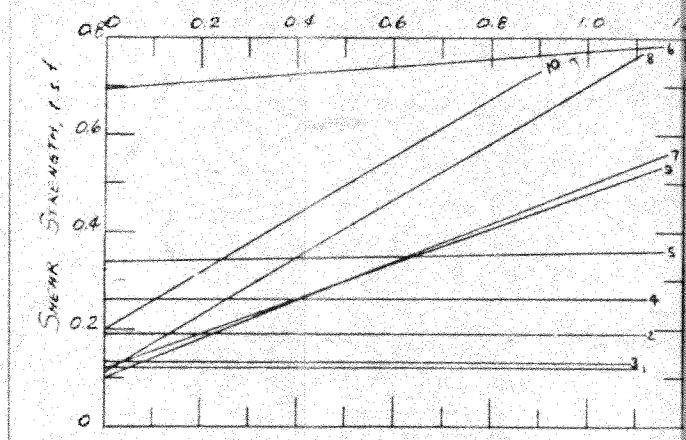

Envelope No.	El.	Type	Strength Ø (Deg)	Strength C t.s.f.	Class
1	-13.0	Q	0	0.12	CH
2	-23.1		0	0.19	CH
3	-33.0		0	0.13	CH
4	-38.8		0	0.86	CH
5	-48.2		1	0.34	CH
6	-76.7		5	0.69	CH
7	-35.1	S	22	0.10	CH
8	-52.9		31	0.11	SM
9	-69.0		20	0.12	CH
10	-80.0		31	0.20	ML

SHEAR STRENGTH DATA

○ - (UC) UNCONFINED COMPR
● - (Q) UNCONSOLIDATED - UN
△ - (R) CONSOLIDATED - UND
□ - (S) CONSOLIDATED - DRA

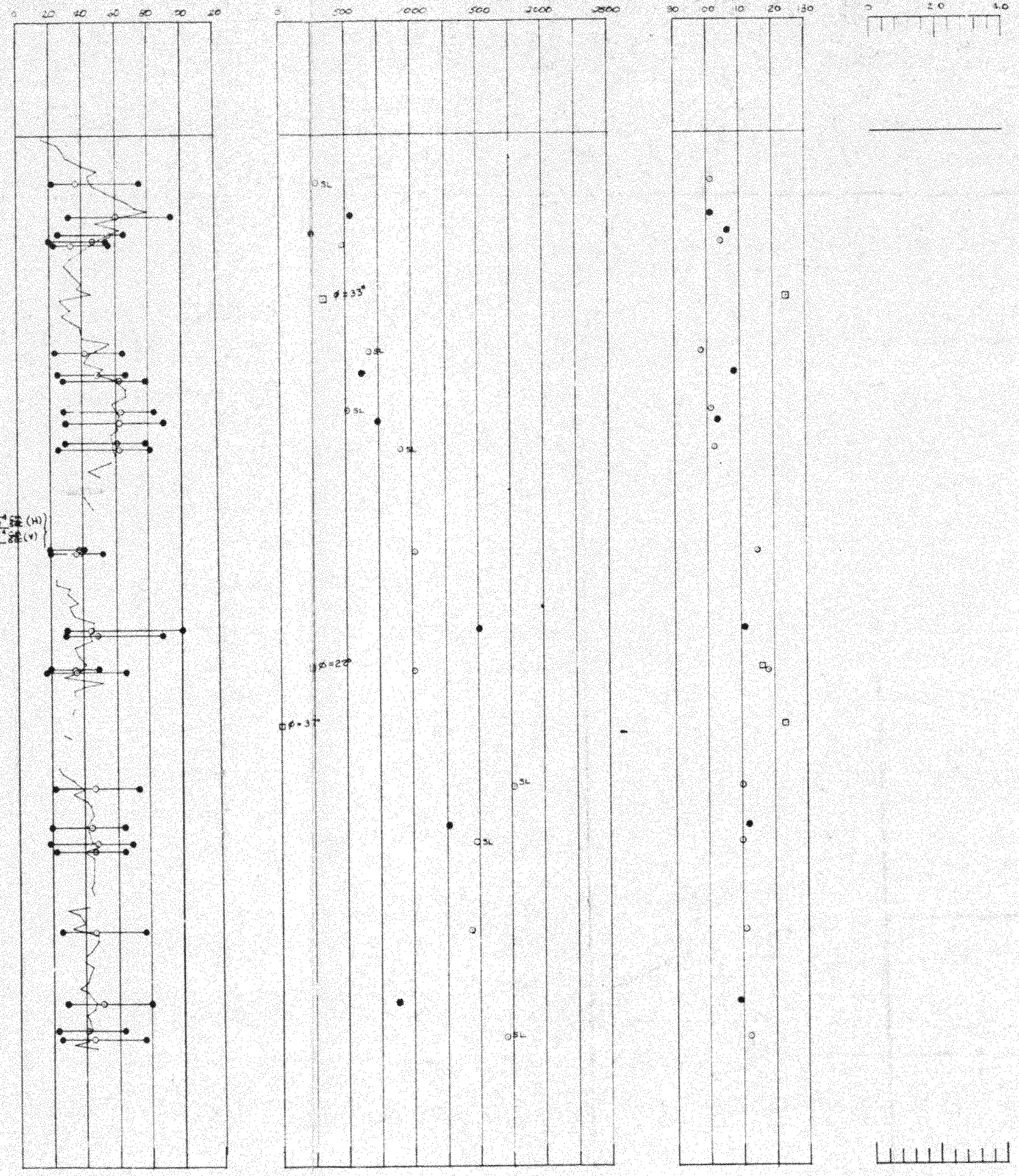
WATER CONTENT "W"
(PERCENT DRY WEIGHT)
0 20 40 60 80 100 120
SHEAR STRENGTH "C"
(POUNDS PER SQ FT)
0 500 1000 1500 2000 2500
WET DENSITY "δ"
(POUNDS / CU FT)
90 100 110 120 130
NORMAL STRESS "σ"
(TONS / SQ FT)
0 2.0 4.0
0
Br
Gr & Br
Gr
Gr & Gr
Gr & Br
Gr
Gr
Gr

BOR. 3-UL
STA. 6+15
100 FT. EAST B/L
1-7 JULY 68

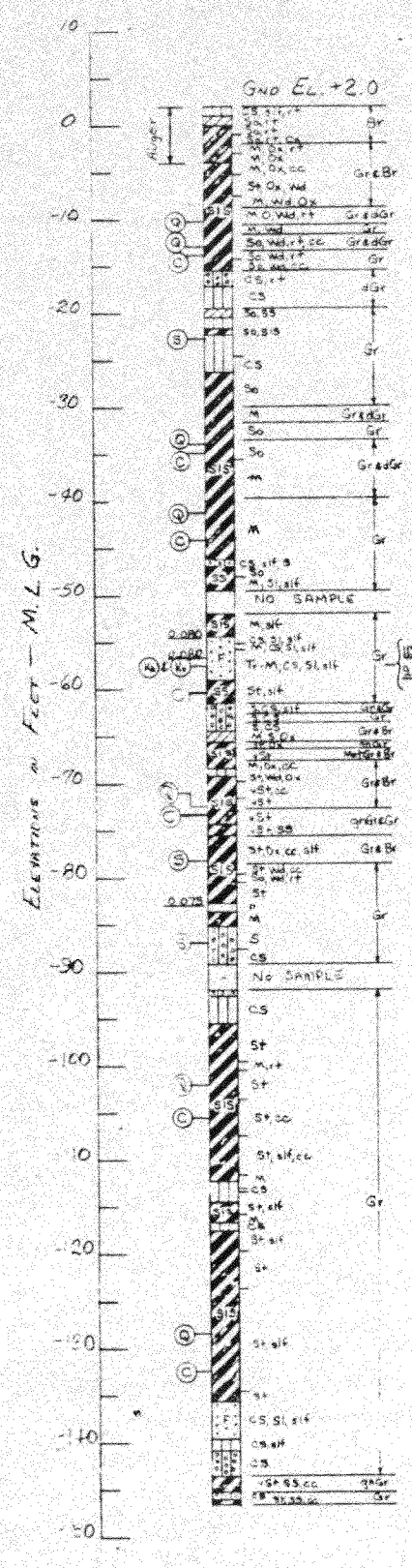

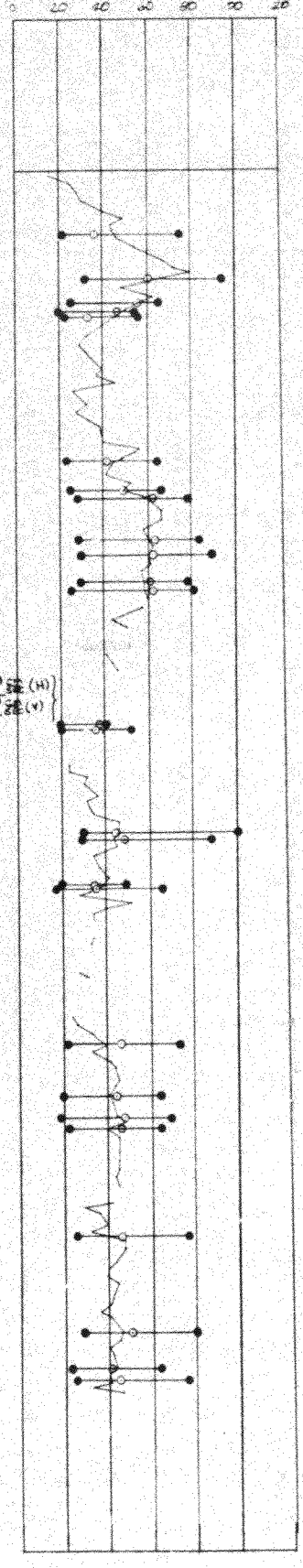

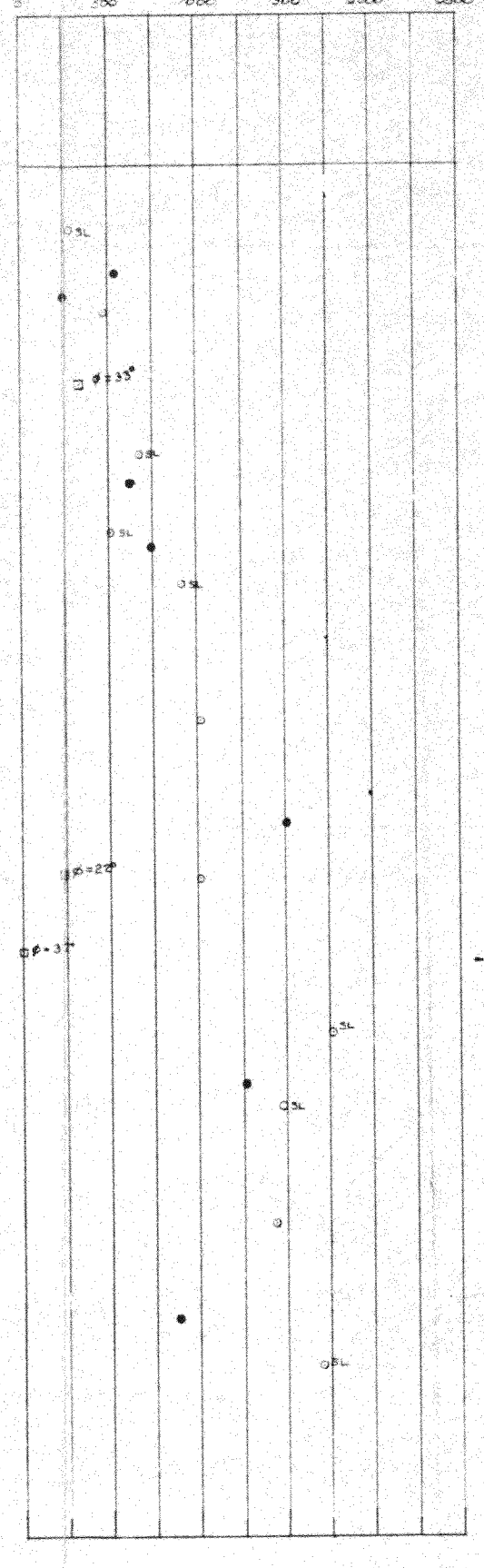

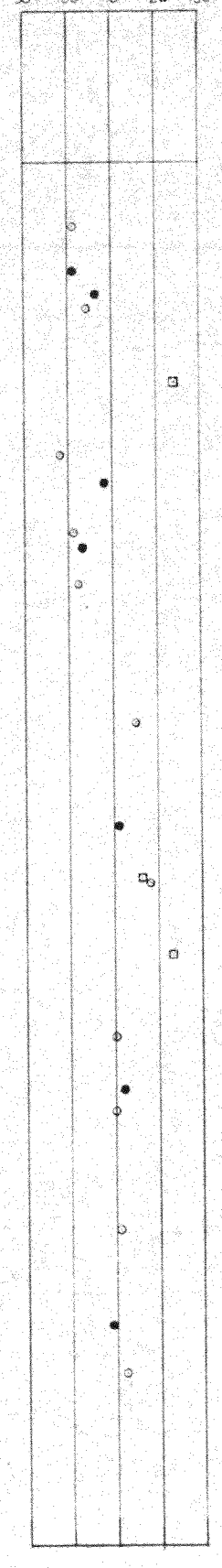

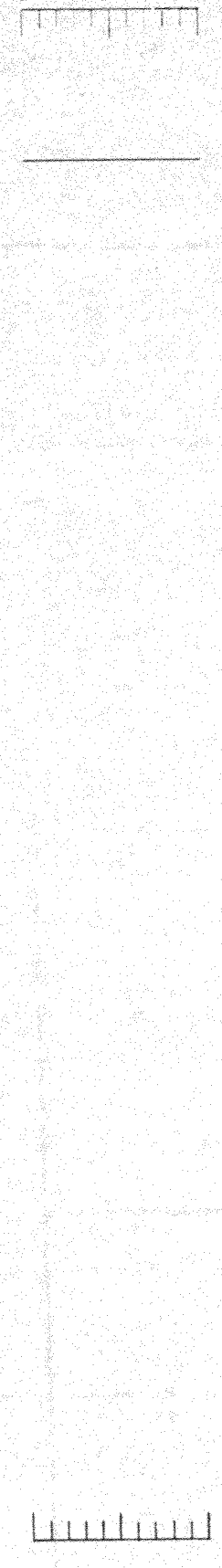

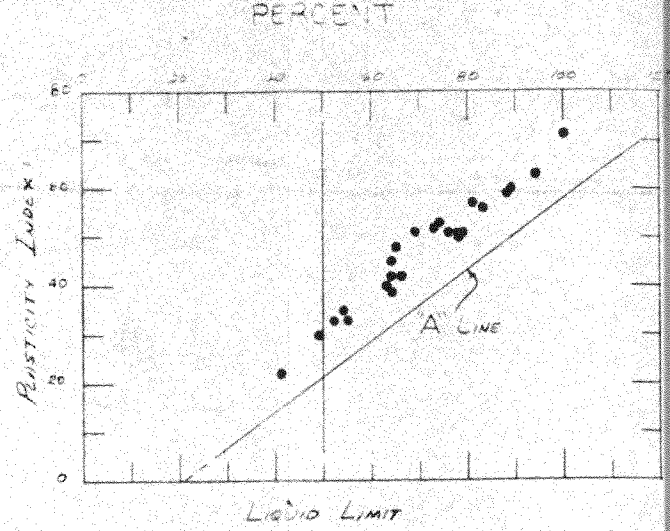

PLASTICITY CHART

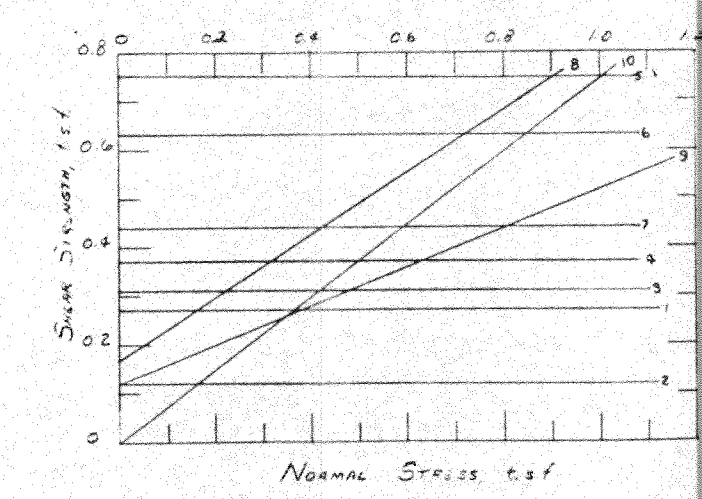

ENVELOPE NO.	EL	TYPE	STRENGTH ϕ deg.	STRENGTH c t.s.f.	USCS
1	-10.2	Q	0	0.27	CH
2	-12.9			0.12	CH
3	-34.0			0.31	CH
4	-41.2			0.37	CH
5	-72.4			0.75	CH
6	-102.0			0.63	CH
7	-128.6		0	0.44	CH
8	-22.8	S	33	0.17	ML
9	-78.2		22	0.12	CL
10	-87.0		37	0	SM

SHEAR STRENGTH DATA

BOR. 4-UL
STA. 10+35
150 FT. WEST B/L

24-28 JUNE 68

ELEVATIONS IN FEET - N.G.V.D.

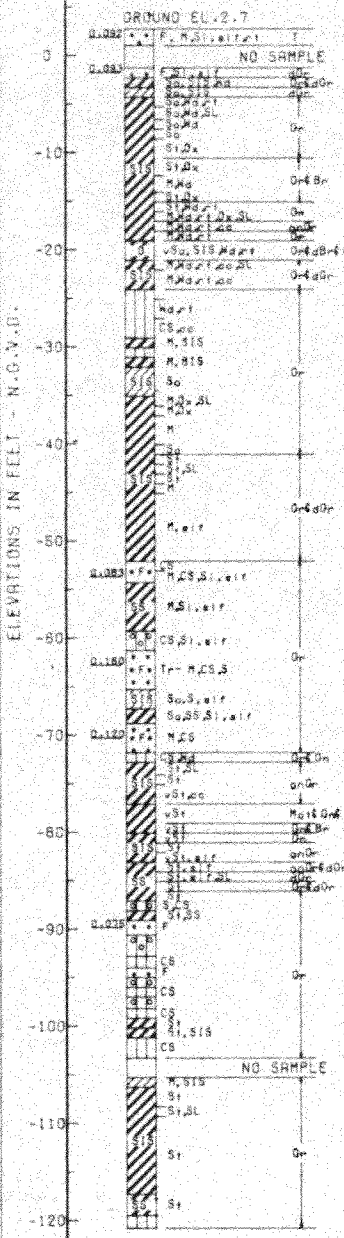

TEST DATA

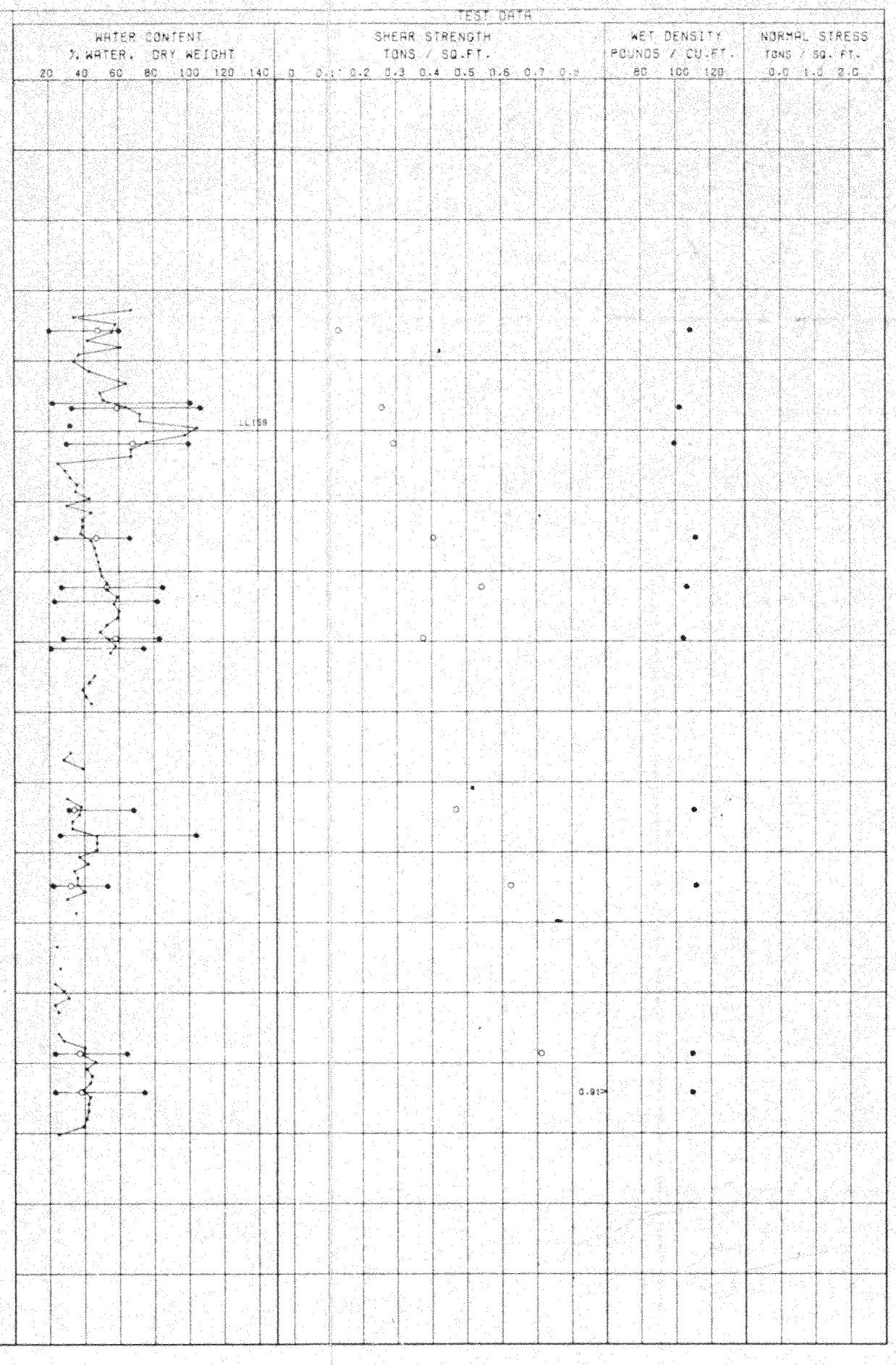

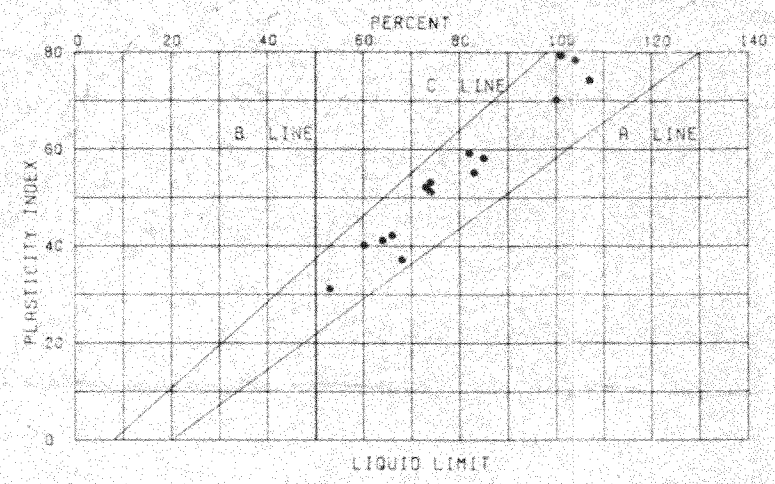

PLASTICITY CHART

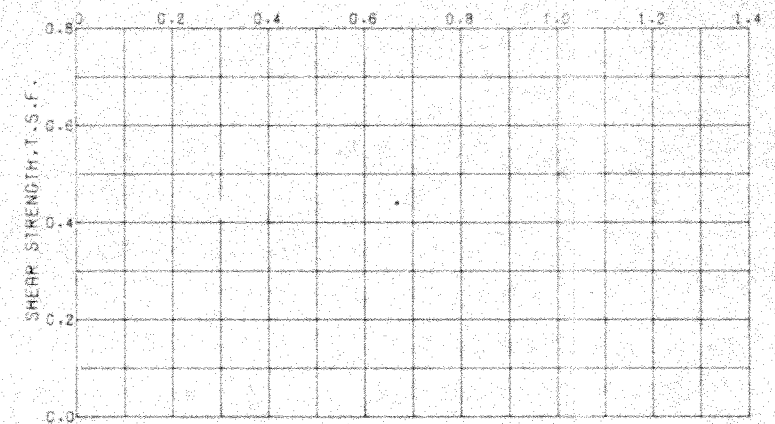

SHEAR STRENGTH DATA

ENVELOPE NO.	ENVELOPE EL.	TYPE	STRENGTH Φ	STRENGTH C - TSF	CLASS

TEST DATA

WATER CONTENT % WATER. DRY WEIGHT	SHEAR STRENGTH TONS / SQ.FT.	WET DENSITY POUNDS / CU.FT.	NORMAL STRESS TONS / SQ. FT.
20 40 60 80 100 120 140	0 0.1 0.2 0.3 0.4 0.5 0.6 0.7 0.8	80 100 120	0.0 1.0 2.0

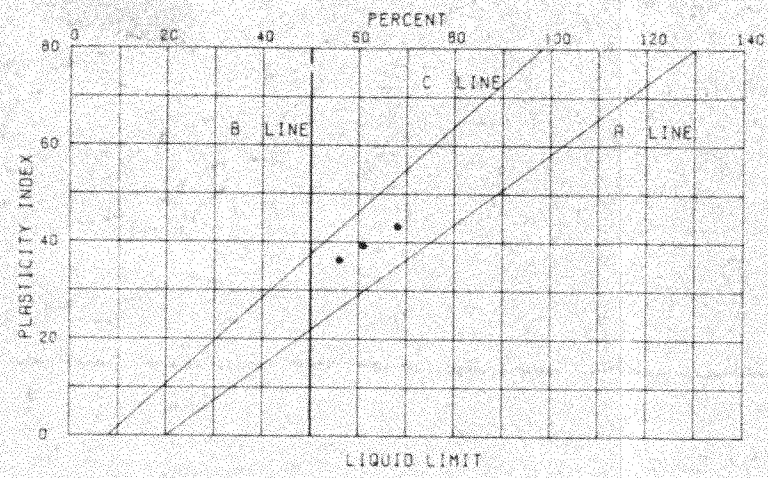

PLASTICITY CHART

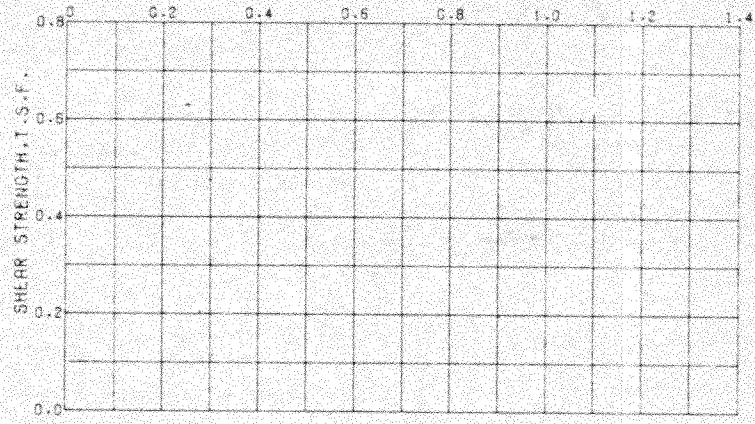

SHEAR STRENGTH DATA

ENVELOPE NO.	ENVELOPE EL.	TYPE	STRENGTH Φ	STRENGTH C - TSF	CLASS

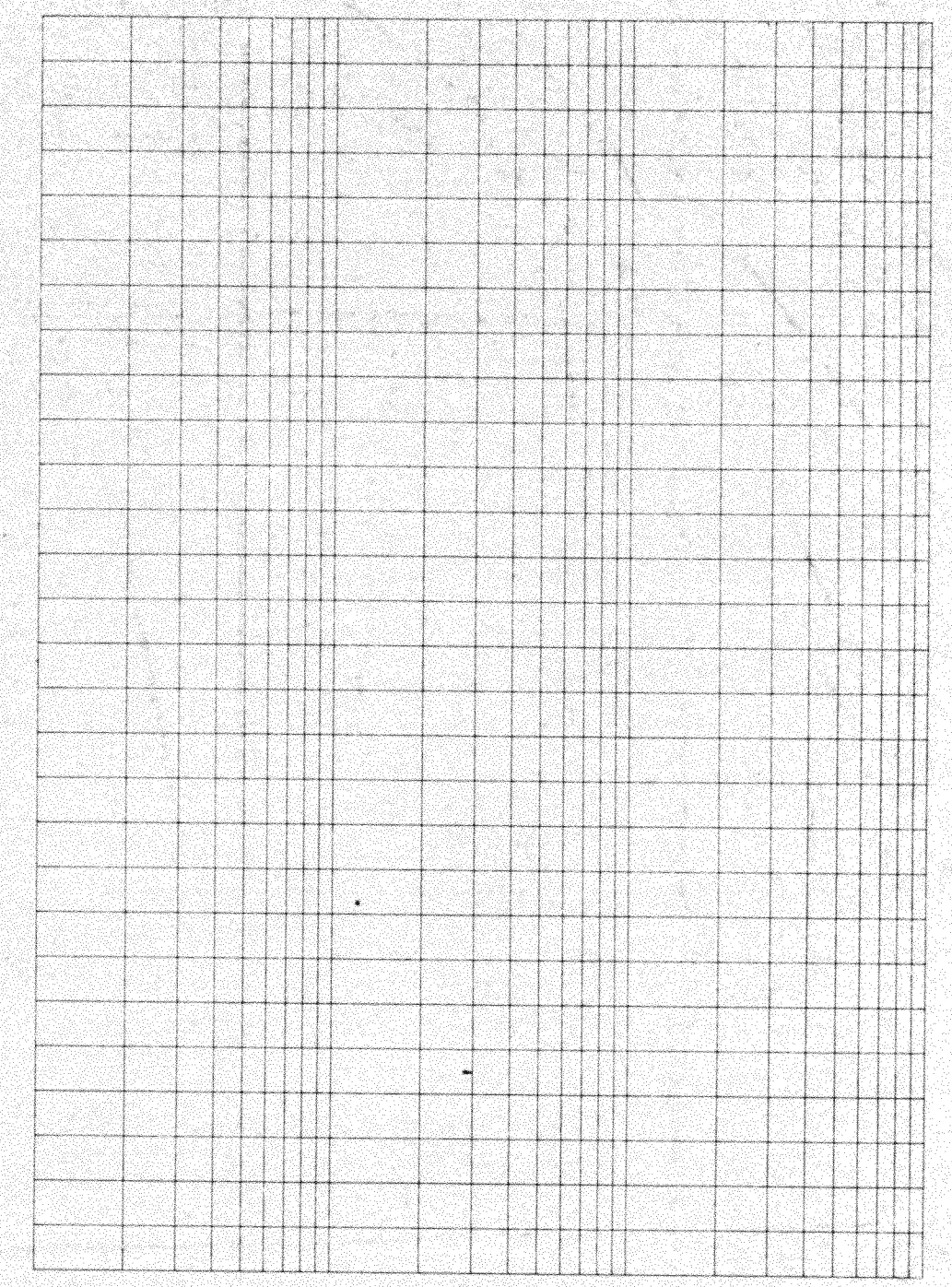

CONSOLIDATION DATA

○ - (UC) UNCONFINED COMPRESSION TEST
■ - (Q) UNCONSOLIDATED - UNDRAINED SHEAR TEST
▲ - (R) CONSOLIDATED - UNDRAINED SHEAR TEST
⊡ - (S) CONSOLIDATED - DRAINED SHEAR TEST

BORINGS WERE TAKEN WITH A 5 INCH DIAMETER STEEL TUBE PISTON TYPE SAMPLER

FOR SOIL BORING LEGEND SEE PLATE A

FOR LOCATION OF BORING SEE PLATE

MISSISSIPPI RIVER - GULF OUTLET
NEW LOCK AND CONNECTING CHANNELS
(INDUSTRIAL CANAL LOCK REPLACEMENT)
FEASIBILITY STUDY

BORING 4-UL CONT'D
UNDISTURBED BORING

U.S. ARMY ENGINEER DISTRICT, NEW ORLEANS
CORPS OF ENGINEERS
NEW ORLEANS, LOUISIANA

DESIGNED BY:	T.G.W.	PLOT SCALE:	PLOT DATE:	CADD FILE:	
DRAWN BY:	K.J.T.	10	JUN 93	FILE NO.	
CHECKED BY:	K.J.T.	DATE: JUN 93		H-2-40392	

BOR. 4-UL

TEST DATA

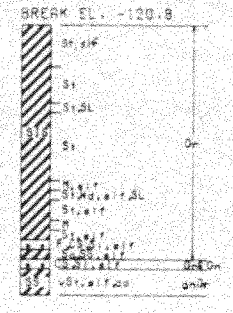

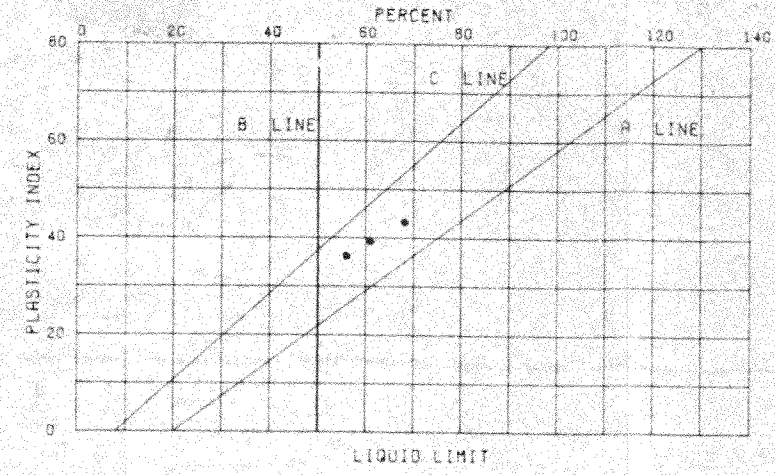

PLASTICITY CHART

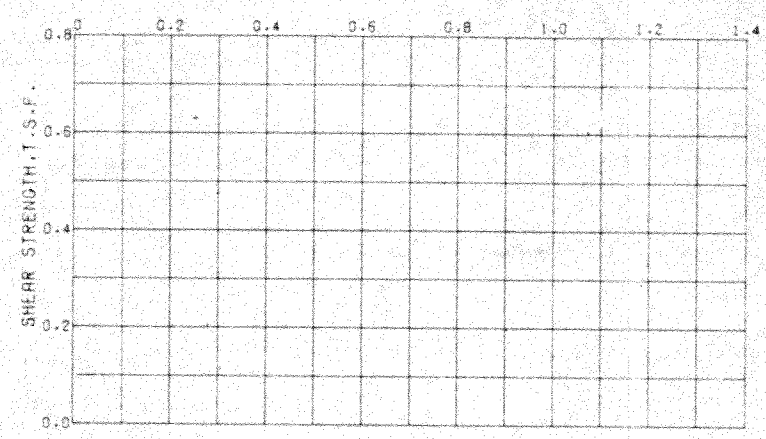

SHEAR STRENGTH DATA

ENVELOPE NO.	ENVELOPE EL.	TYPE	STRENGTH Φ	STRENGTH C - TSF	CLASS

TEST DATA

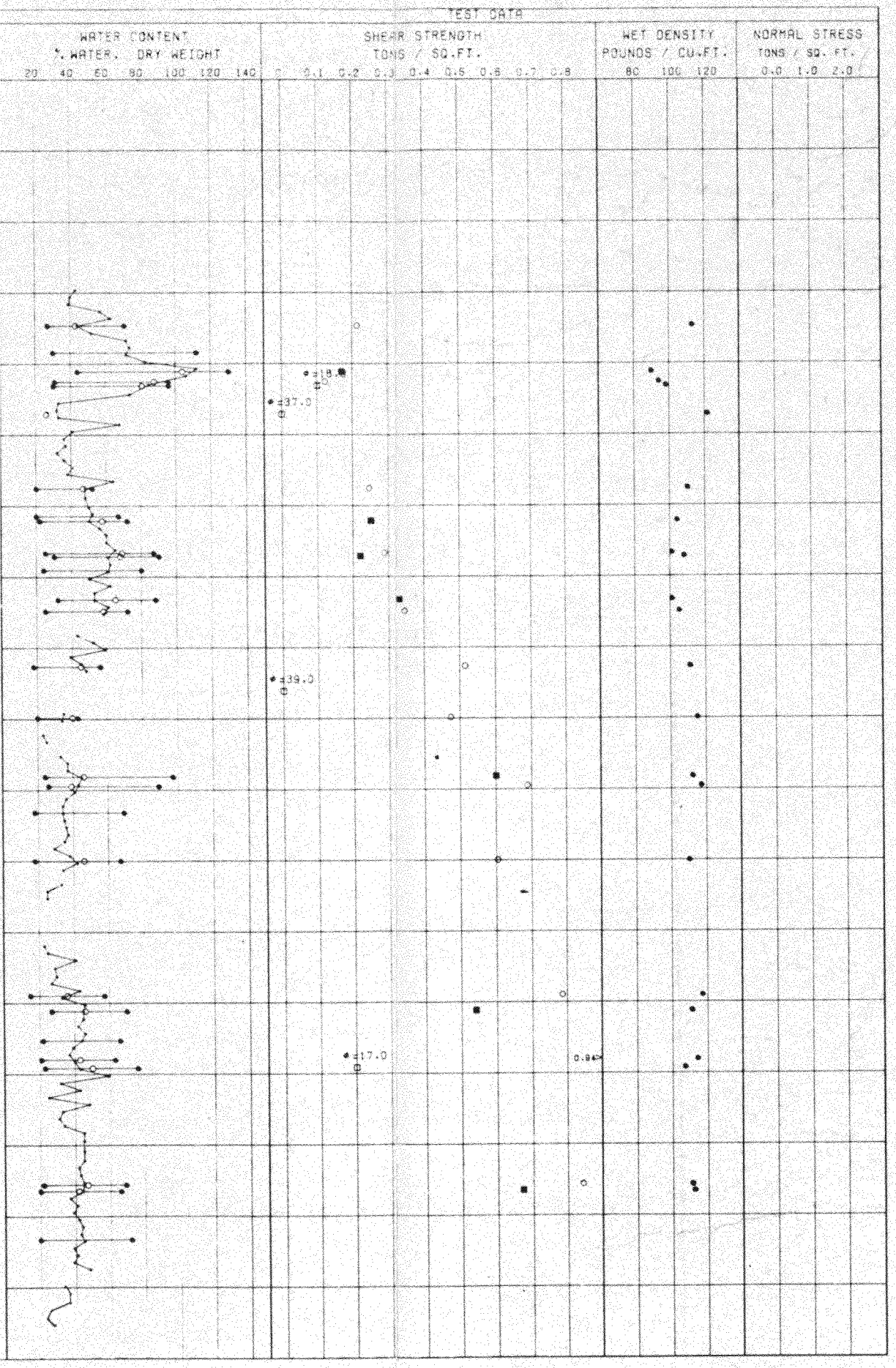

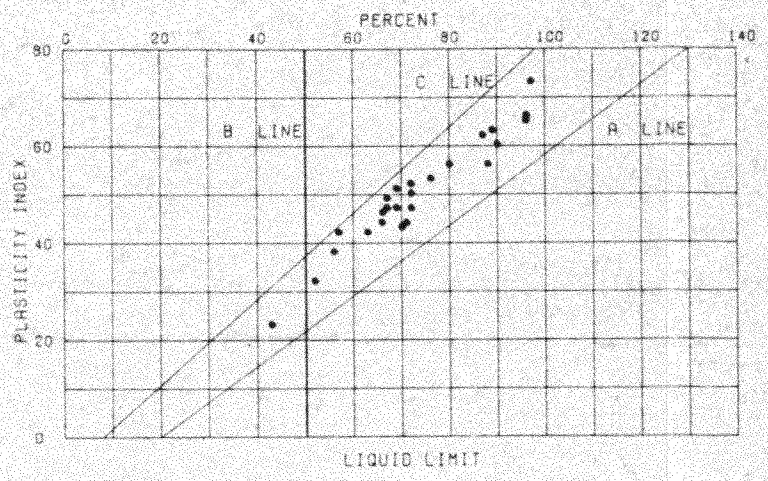

PLASTICITY CHART

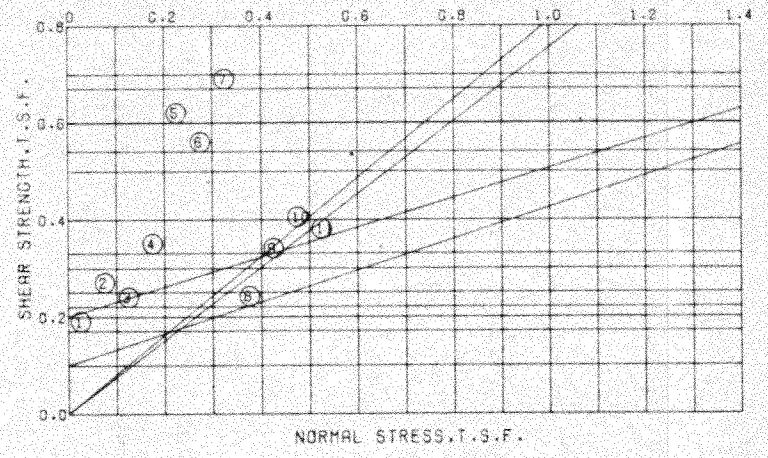

SHEAR STRENGTH DATA

ENVELOPE NO.	ENVELOPE EL.	TYPE	STRENGTH Φ	STRENGTH C - TSF	CLASS
1	-11.20	Q	0.0	0.170	CH
2	-32.20	Q	0.0	0.250	CH
3	-37.20	Q	0.0	0.220	CH
4	-43.30	Q	0.0	0.330	CH
5	-68.20	Q	0.0	0.600	CH
6	-101.20	Q	0.0	0.540	CH
7	-126.50	Q	0.0	0.670	CH
8	-13.20	S	18.0	0.100	CH
9	-17.20	S	37.0	0.000	ML
10	-56.20	S	39.0	0.000	SM
11	-109.20	S	17.0	0.200	CH

VOID RATIO

LOAD 'P' TONS / SQ. FT.

CONSOLIDATION DATA

○ - (UC) UNCONFINED COMPRESSION TEST
■ - (Q) UNCONSOLIDATED - UNDRAINED SHEAR TEST
▲ - (R) CONSOLIDATED - UNDRAINED SHEAR TEST
⊡ - (S) CONSOLIDATED - DRAINED SHEAR TEST

BORINGS WERE TAKEN WITH A 5 INCH DIAMETER STEEL TUBE PISTON TYPE SAMPLER

FOR SOIL BORING LEGEND SEE PLATE A

FOR LOCATION OF BORING SEE PLATE

MISSISSIPPI RIVER - GULF OUTLET
NEW LOCK AND CONNECTING CHANNELS
(INDUSTRIAL CANAL LOCK REPLACEMENT)
FEASIBILITY STUDY

BORING 8-UL
UNDISTURBED BORING

U.S. ARMY ENGINEER DISTRICT, NEW ORLEANS
CORPS OF ENGINEERS
NEW ORLEANS, LOUISIANA

DESIGNED BY:	T.G.W.	PLOT SCALE:	PLOT DATE:	CADD FILE:	
DRAWN BY:	K.J.T.	10	JUN 93	FILE NO.	H-2-40392
CHECKED BY:	K.J.T.	DATE:	JUN 93		

BOR. 8-UL
STA. 10+65
390 FT. EAST B/L

22 JULY 68

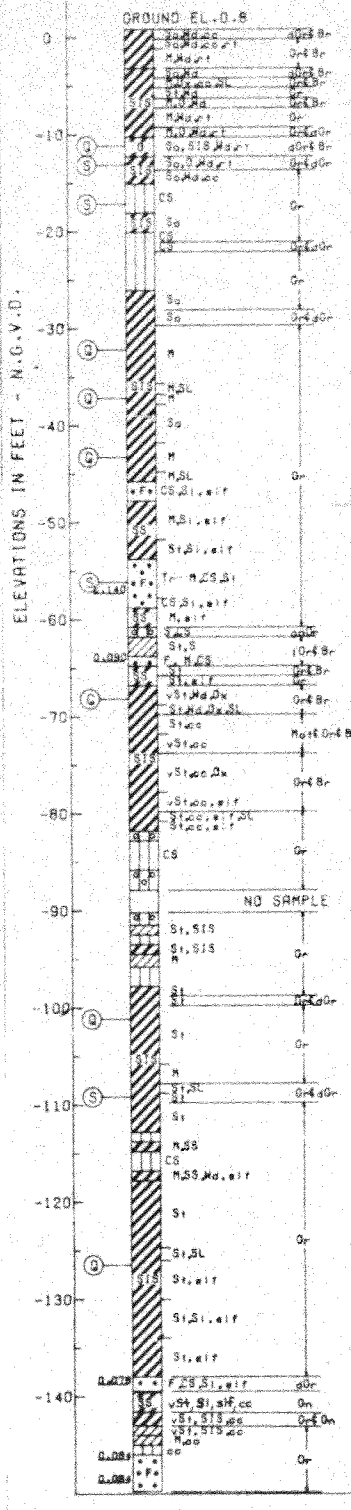

TEST DATA

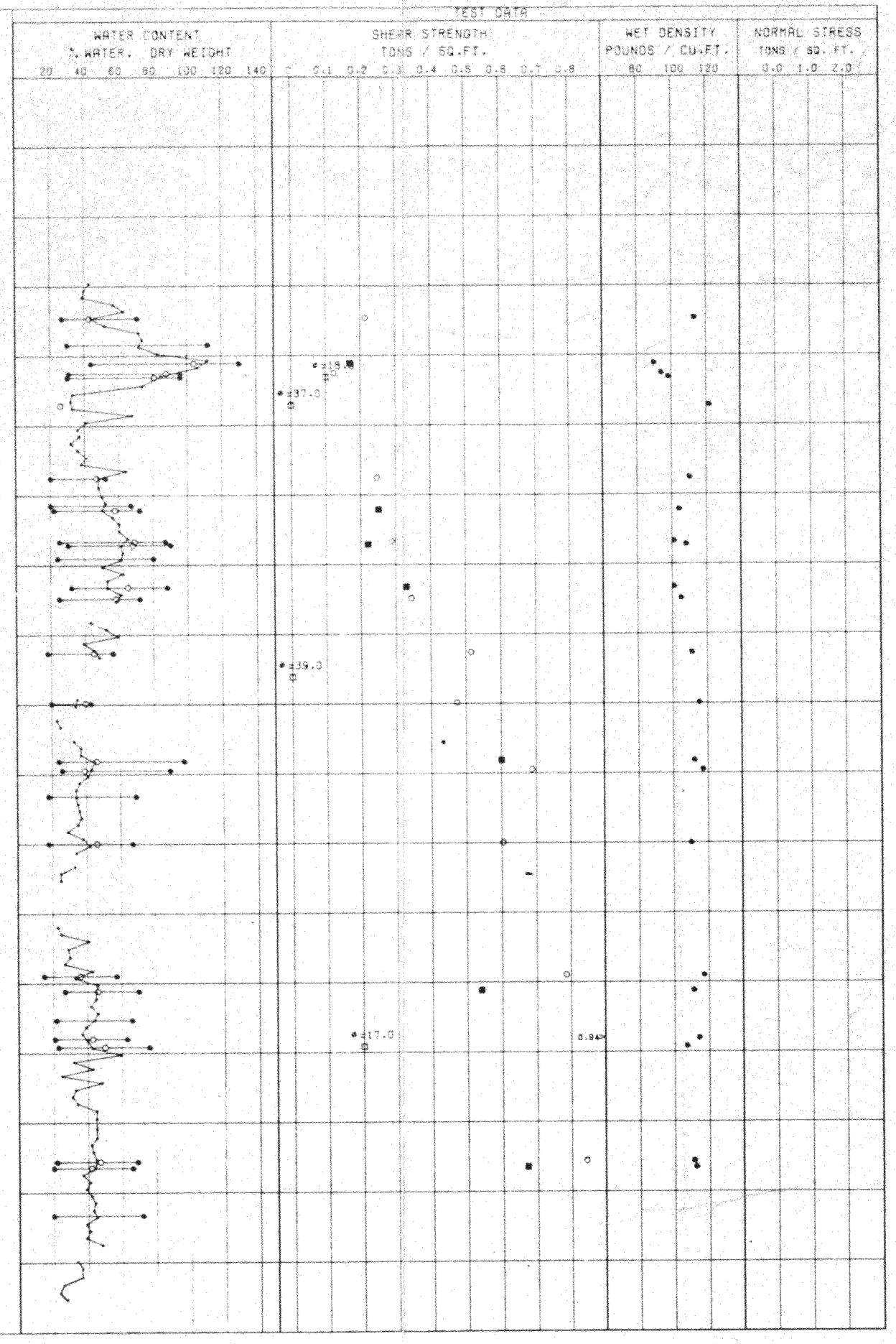

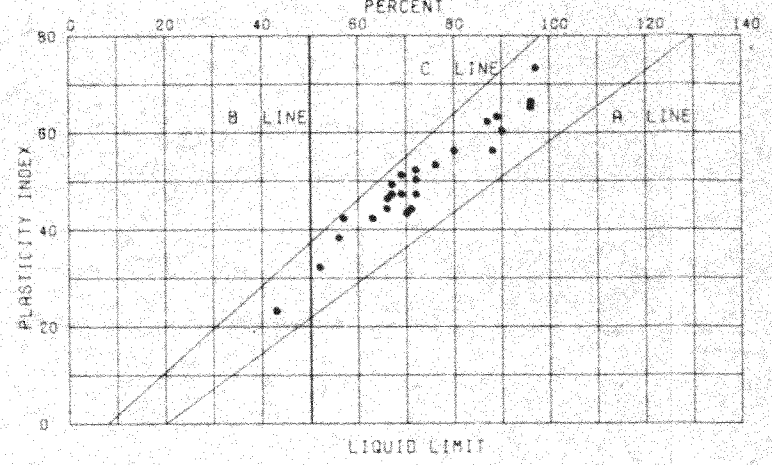

PLASTICITY CHART

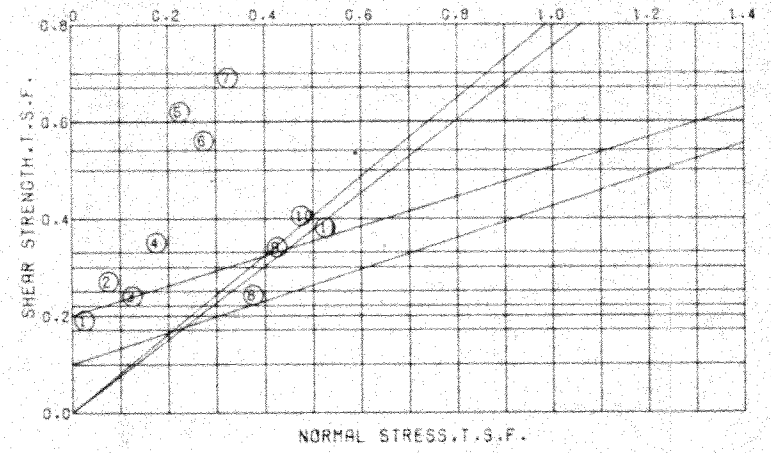

SHEAR STRENGTH DATA

ENVELOPE NO.	EL.	TYPE	STRENGTH Φ	STRENGTH C - TSF	CLASS
1	-11.20	Q	0.0	0.170	CH
2	-32.20	Q	0.0	0.250	CH
3	-37.20	Q	0.0	0.220	CH
4	-43.30	Q	0.0	0.330	CH
5	-68.20	Q	0.0	0.600	CH
6	-101.20	Q	0.0	0.540	CH
7	-126.50	Q	0.0	0.670	CH
8	-13.20	S	18.0	0.100	CH
9	-17.20	S	37.0	0.000	ML
10	-56.20	S	39.0	0.000	SM
11	-109.20	S	17.0	0.200	CH

VOID RATIO

○ - (UC) UNCONFINED COM
■ - (Q) UNCONSOLIDATED
▲ - (R) CONSOLIDATED -
⊡ - (S) CONSOLIDATED -

BORINGS WERE TAKEN WITH A
STEEL TUBE PISTON TYP
FOR SOIL BORING LEGEND SEE
FOR LOCATION OF BORING SEE

TEST DATA

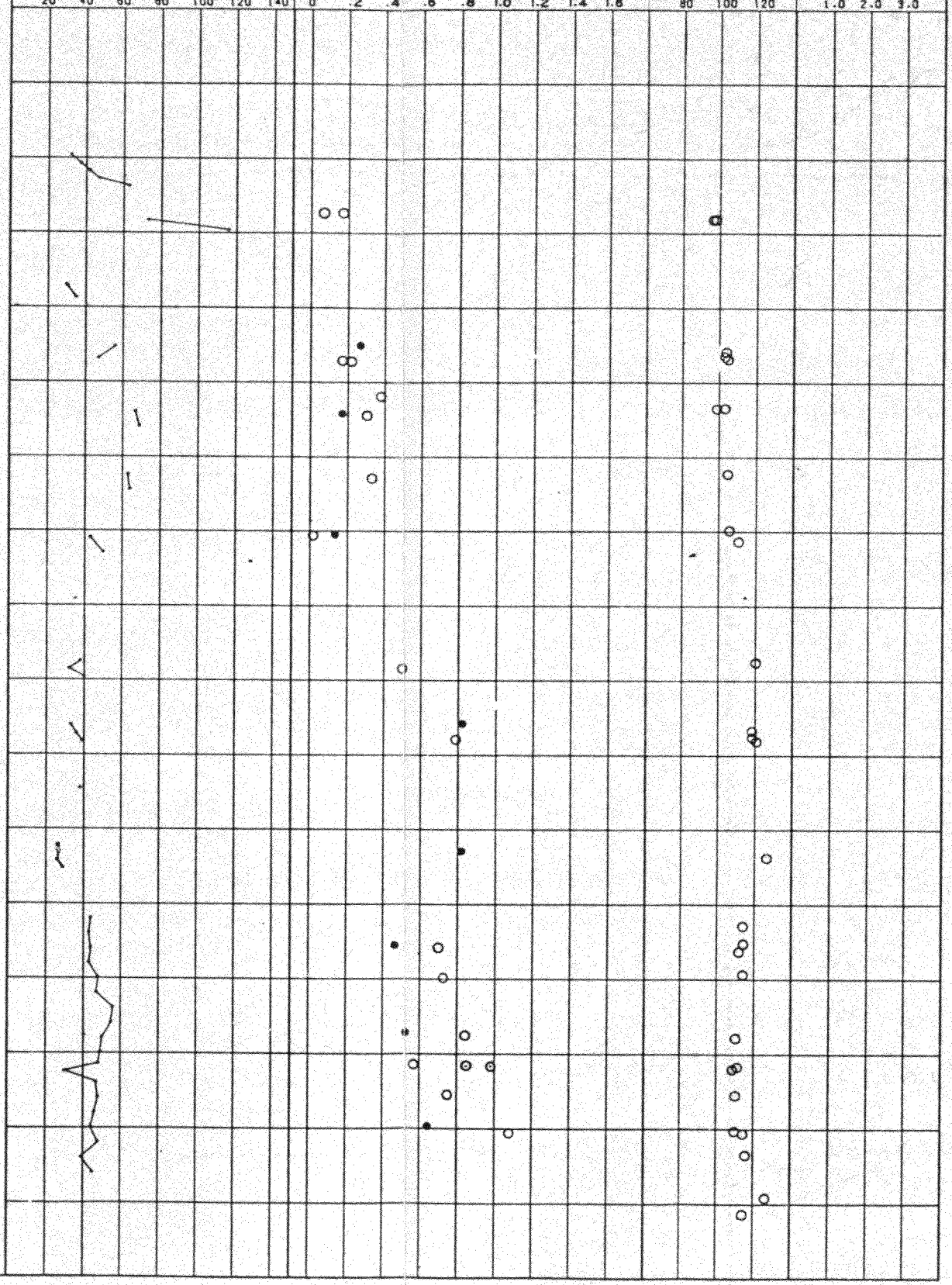

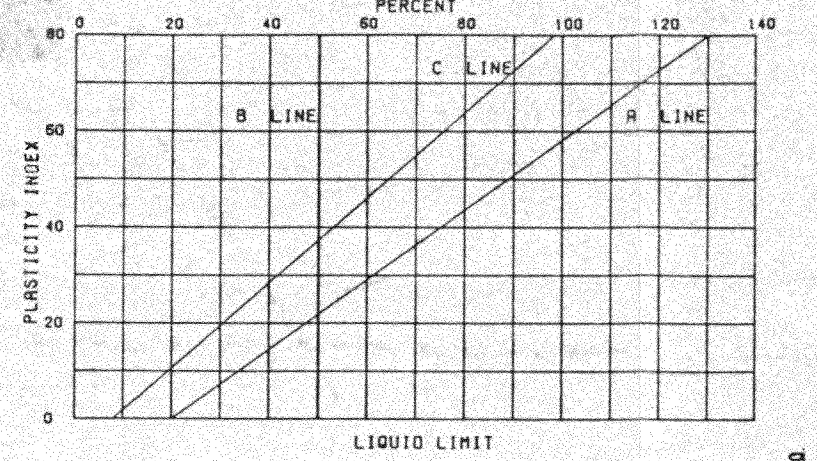

PLASTICITY CHART

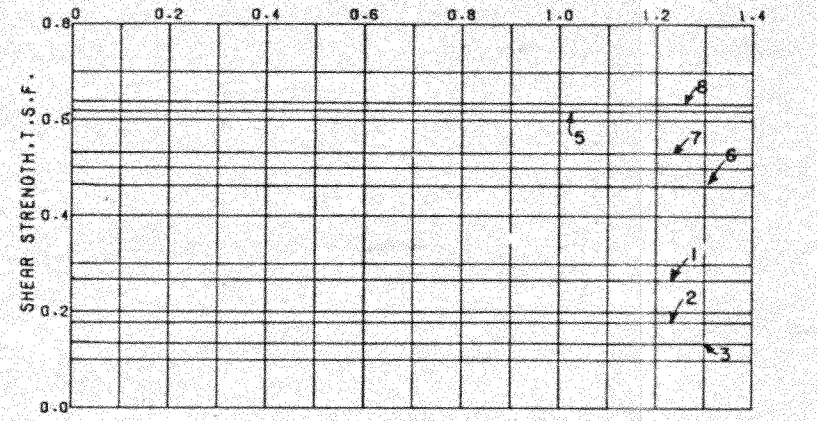

SHEAR STRENGTH DATA

ENVELOPE NO.	ENVELOPE EL.	TYPE	STRENGTH Φ	STRENGTH C - TSF	CLASS
1	-25.3	Q	0	.27	CH
2	-33.9	Q	0	.18	CH
3	-50.9	Q	0	.14	CH
4	-78.3	Q	2.0	.83	CH
5	-93.3	Q	0	.82	CH
6	-105.7	Q	0	.47	CH
7	-117.8	Q	0	.53	CH
8	-129.8	Q	0	.84	CH

VOID RATIO

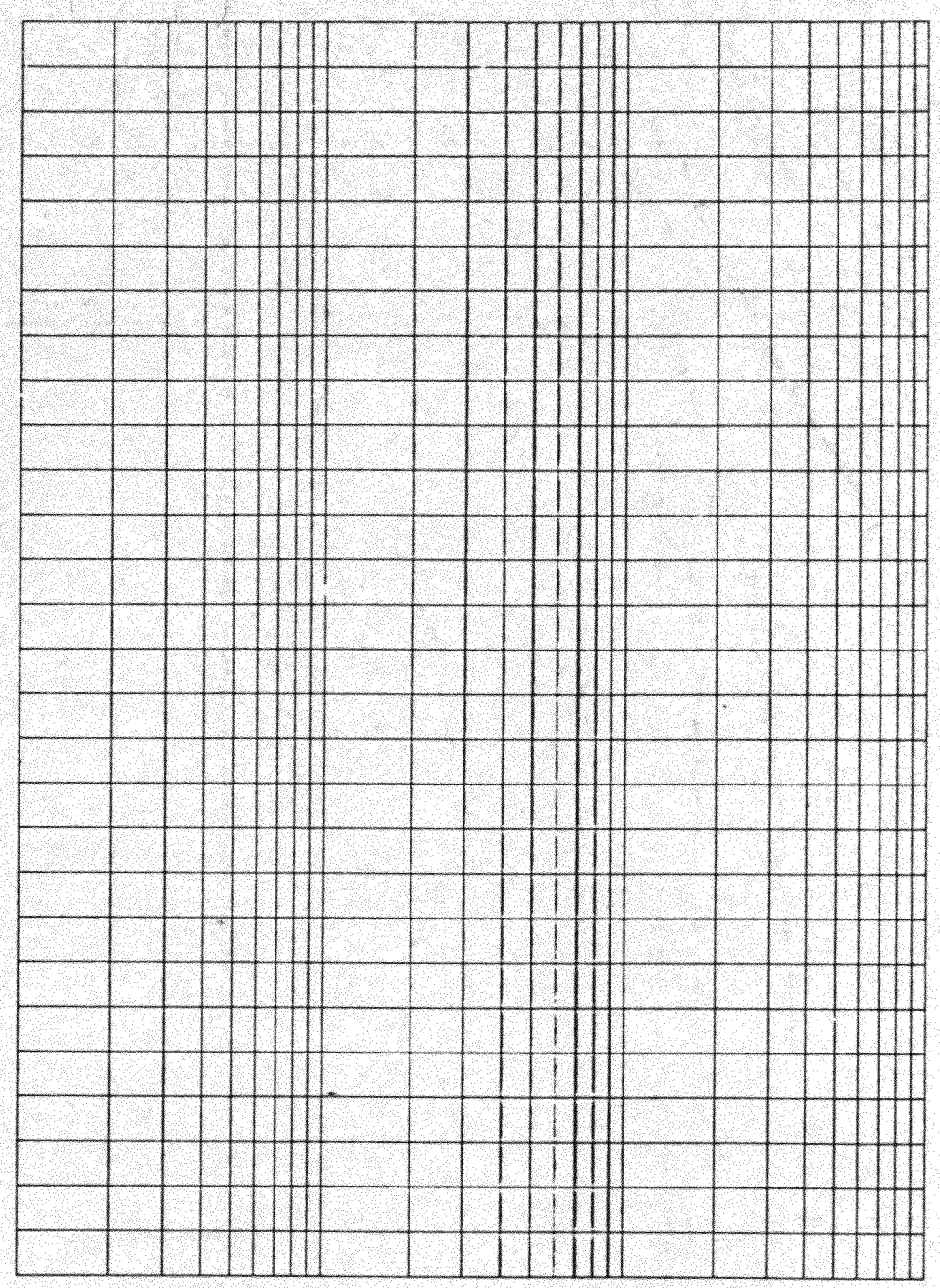

CONSOLIDATION DATA

○ - (UC) UNCONFINED COMPRESSION TEST
● - (Q) UNCONSOLIDATED - UNDRAINED SHEAR TEST
- (R) CONSOLIDATED - UNDRAINED SHEAR TEST
- (S) CONSOLIDATED - DRAINED SHEAR TEST

BORINGS WERE TAKEN WITH A 5 INCH DIAMETER STEEL TUBE PISTON TYPE SAMPLER

FOR SOIL BORING LEGEND SEE PLATE A

FOR LOCATION OF BORINGS SEE PLATE

MISSISSIPPI RIVER - GULF OUTLET
NEW LOCK AND CONNECTING CHANNELS
(INDUSTRIAL CANAL LOCK REPLACEMENT)
FEASIBILITY STUDY

BORING 9-UL
UNDISTURBED BORING

U.S. ARMY ENGINEER DISTRICT, NEW ORLEANS
CORPS OF ENGINEERS
NEW ORLEANS, LOUISIANA

DESIGNED BY: T.G.W.	PLOT SCALE: 10	PLOT DATE: JUN 93	CADD FILE:
DRAWN BY: K.J.T.			FILE NO. H-2-40392
CHECKED BY: K.J.T.	DATE: JUN 93		

PLATE B-72

BOR. 9-UL
STA. 10+35
130 FT. EAST B/L

4-16 MAR 69

GROUND EL. 1.1

ELEVATIONS IN FEET - M.S.L.

NO SAMPLE

TEST DATA

WATER CONTENT
% WATER, DRY WEIGHT
20 40 60 80 100 120 140

SHEAR STRENGTH
TONS / SQ.FT.
0 .2 .4 .6 .8 1.0 1.2 1.4 1.6

WET DENSITY
POUNDS / CU.FT.
80 100 120

NORMAL STRESS
TONS / SQ. FT.
1.0 2.0 3.0

PLASTICITY INDEX

PERCENT
0 20 40 60 80 100 120 140

C LINE
B LINE
A LINE

LIQUID LIMIT

PLASTICITY CHART

SHEAR STRENGTH T.S.F.

0 0.2 0.4 0.6 0.8 1.0 1.2 1.4

NORMAL STRESS.T.S.F.

SHEAR STRENGTH DATA

ENVELOPE NO.	EL.	TYPE	STRENGTH Φ	STRENGTH C - TSF	CLASS
1	-25.3	Q	0	.27	CH
2	-33.9	Q	0	.18	CH
3	-50.9	Q	0	.14	CH
4	-76.3	Q	20	.83	CH
5	-93.3	Q	0	.82	CH
6	-105.7	Q	0	.47	CH
7	-117.8	Q	0	.53	CH
8	-129.8	Q	0	.64	CH

○ - (UC) UNCONFINED
● - (Q) UNCONSOLIDA
- (R) CONSOLIDATE
- (S) CONSOLIDATE

BORINGS WERE TAKEN WIT
STEEL TUBE PISTON

FOR SOIL BORING LEGEND

FOR LOCATION OF BORING

VOID RATIO

TEST DATA

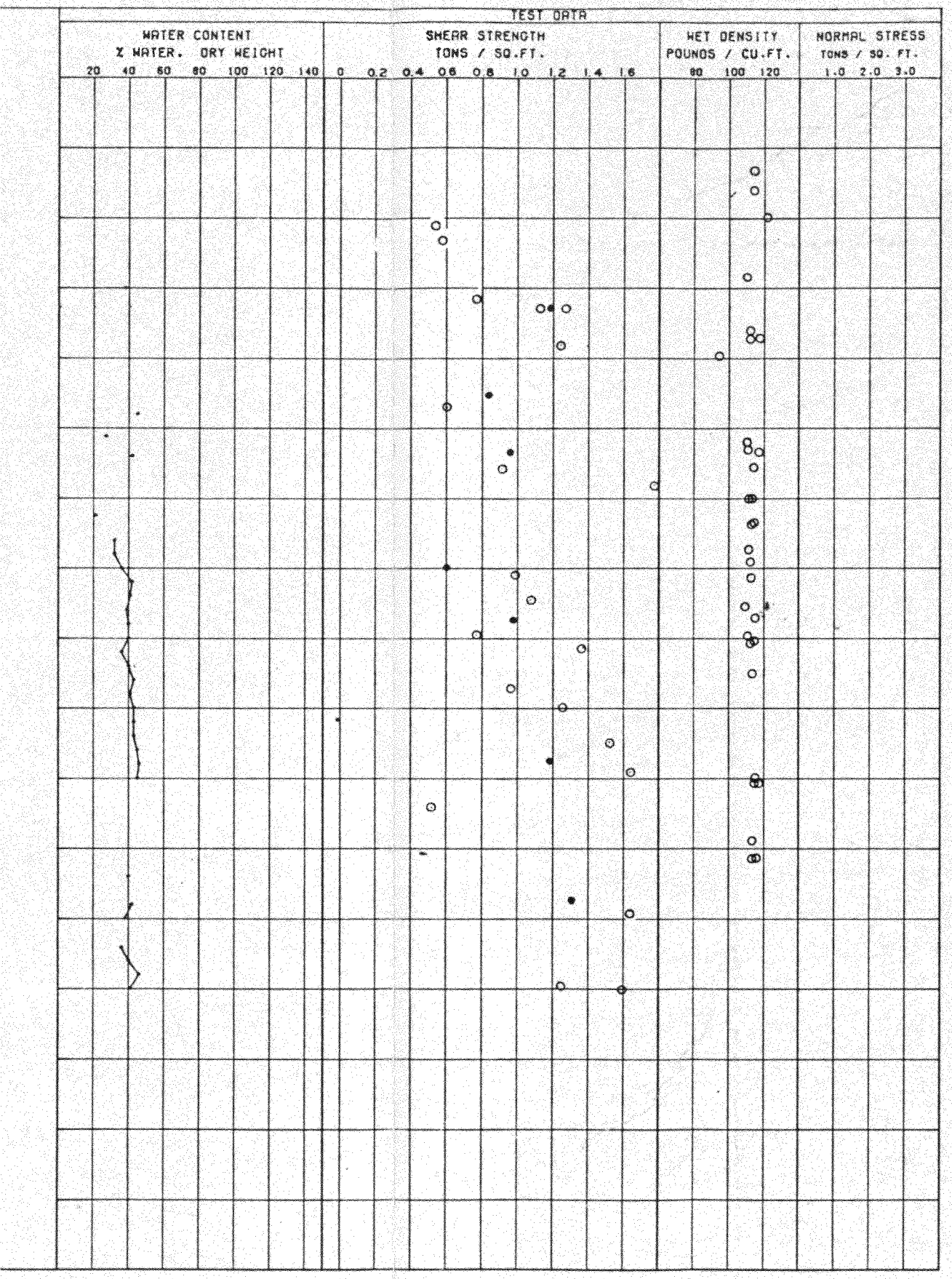

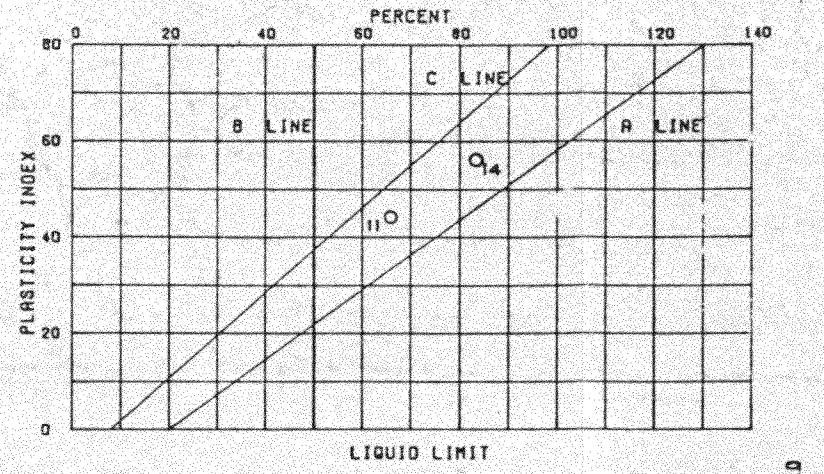

PLASTICITY CHART

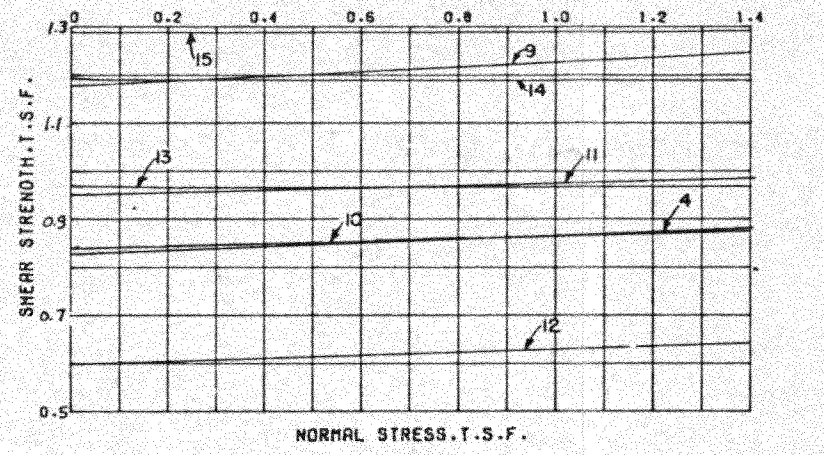

SHEAR STRENGTH DATA

ENVELOPE NO.	ENVELOPE EL.	TYPE	STRENGTH Φ	STRENGTH C - TSF	CLASS
9	-153.8	Q	3.0	1.18	CH
10	-165.8	Q	1.0	0.84	CH
11	-173.8	Q	1.0	0.95	CH
12	-189.8	Q	2.0	6	CH
13	-197.8	Q	0	.97	CH
14	-217.8	Q	0	1.19	CH
15	-237.8	Q	0	1.29	CH

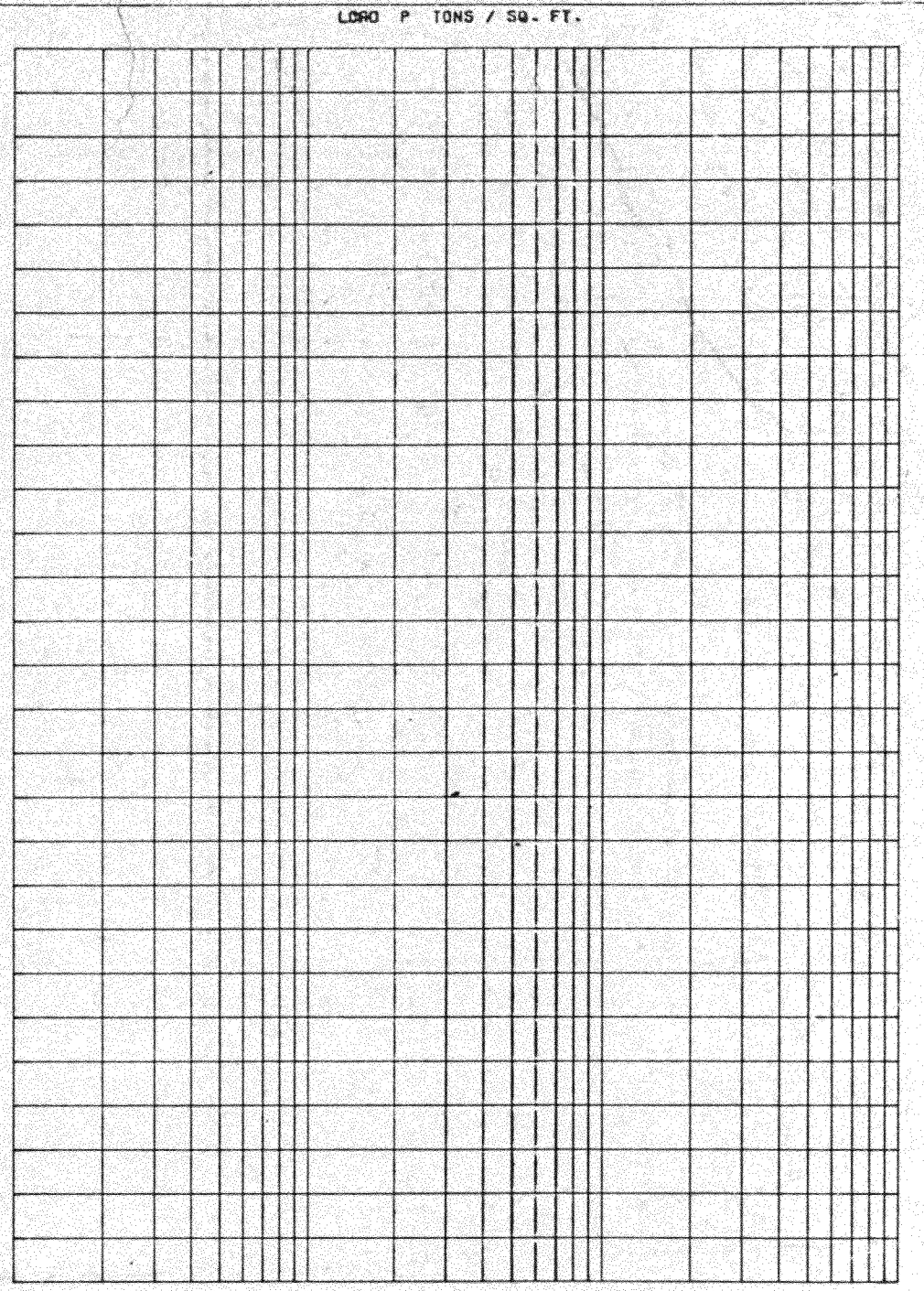

CONSOLIDATION DATA

○ - (UC) UNCONFINED COMPRESSION TEST
● - (Q) UNCONSOLIDATED - UNDRAINED SHEAR TEST
- (R) CONSOLIDATED - UNDRAINED SHEAR TEST
- (S) CONSOLIDATED - DRAINED SHEAR TEST
BORINGS WERE TAKEN WITH A 6 INCH DIAMETER STEEL TUBE PISTON TYPE SAMPLER
FOR SOIL BORING LEGEND SEE PLATE A
FOR LOCATION OF BORINGS SEE PLATE

MISSISSIPPI RIVER - GULF OUTLET
NEW LOCK AND CONNECTING CHANNELS
(INDUSTRIAL CANAL LOCK REPLACEMENT)
FEASIBILITY STUDY

BORING 9-UL CONT'D
UNDISTURBED BORING

U.S. ARMY ENGINEER DISTRICT, NEW ORLEANS
CORPS OF ENGINEERS
NEW ORLEANS, LOUISIANA

DESIGNED BY: T.G.W.	PLOT SCALE: 10	PLOT DATE: JUN 93	CADD FILE:	
DRAWN BY: K.J.T.			FILE NO.	H-2-40392
CHECKED BY: K.J.T.	DATE: JUN 93			

PLATE B-73

BOR 9-UL

CONTINUED

TEST DATA

WATER CONTENT
% WATER, DRY WEIGHT
20 40 60 80 100 120 140

SHEAR STRENGTH
TONS / SQ.FT.
0 0.2 0.4 0.6 0.8 1.0 1.2 1.4 1.6

WET DENSITY
POUNDS / CU.FT.
80 100 120

NORMAL STRESS
TONS / SQ. FT.
1.0 2.0 3.0

ELEVATIONS IN FEET - M.S.L.

-130 -140 -150 -160 -170 -180 -190 -200 -210 -220 -230 -240 -250 -260 -270 -280

GROUND EL.-136.8

NO SAMPLE

NO SAMPLE

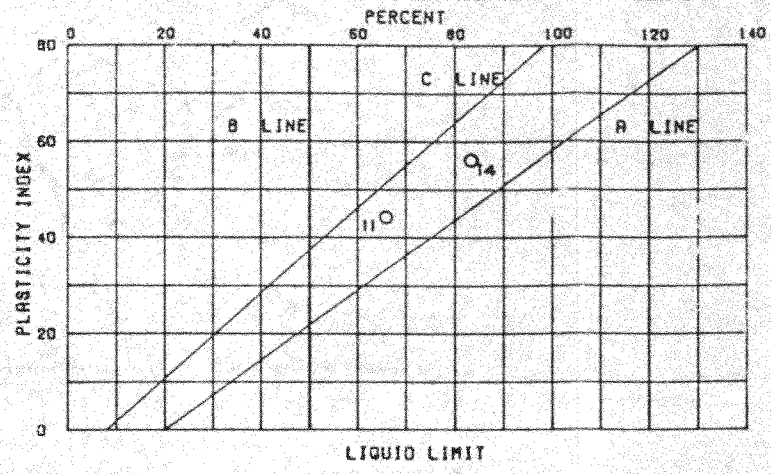

PLASTICITY CHART

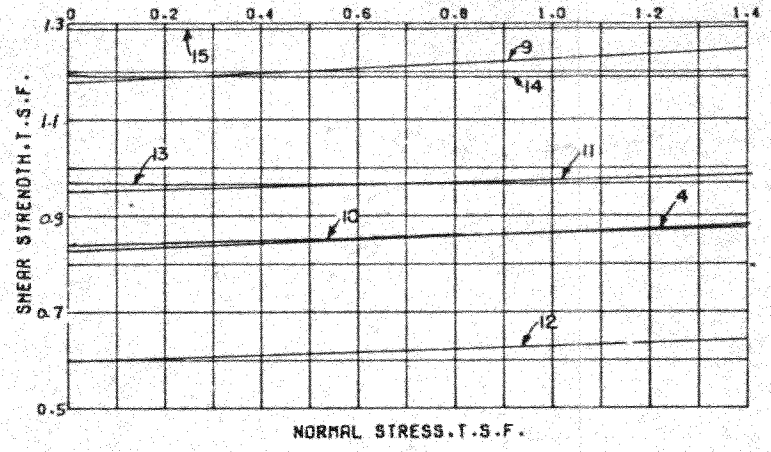

SHEAR STRENGTH DATA

ENVELOPE NO.	ENVELOPE EL.	TYPE	STRENGTH Φ	STRENGTH C - TSF	CLASS
9	-153.8	Q	3.0	1.18	CH
10	-165.8	Q	1.0	0.84	CH
11	-173.8	Q	1.0	0.95	CH
12	-189.8	Q	2.0	6	CH
13	-197.8	Q	0	97	CH
14	-217.8	Q	0	1.19	CH
15	-237.8	Q	0	1.29	CH

VOID RATIO

○ - (UC) UNCON
● - (Q) UNCONS
- (R) CONSOL
- (S) CONSOL

BORINGS WERE TAKE
STEEL TUBE
FOR SOIL BORING
FOR LOCATION OF

TEST DATA

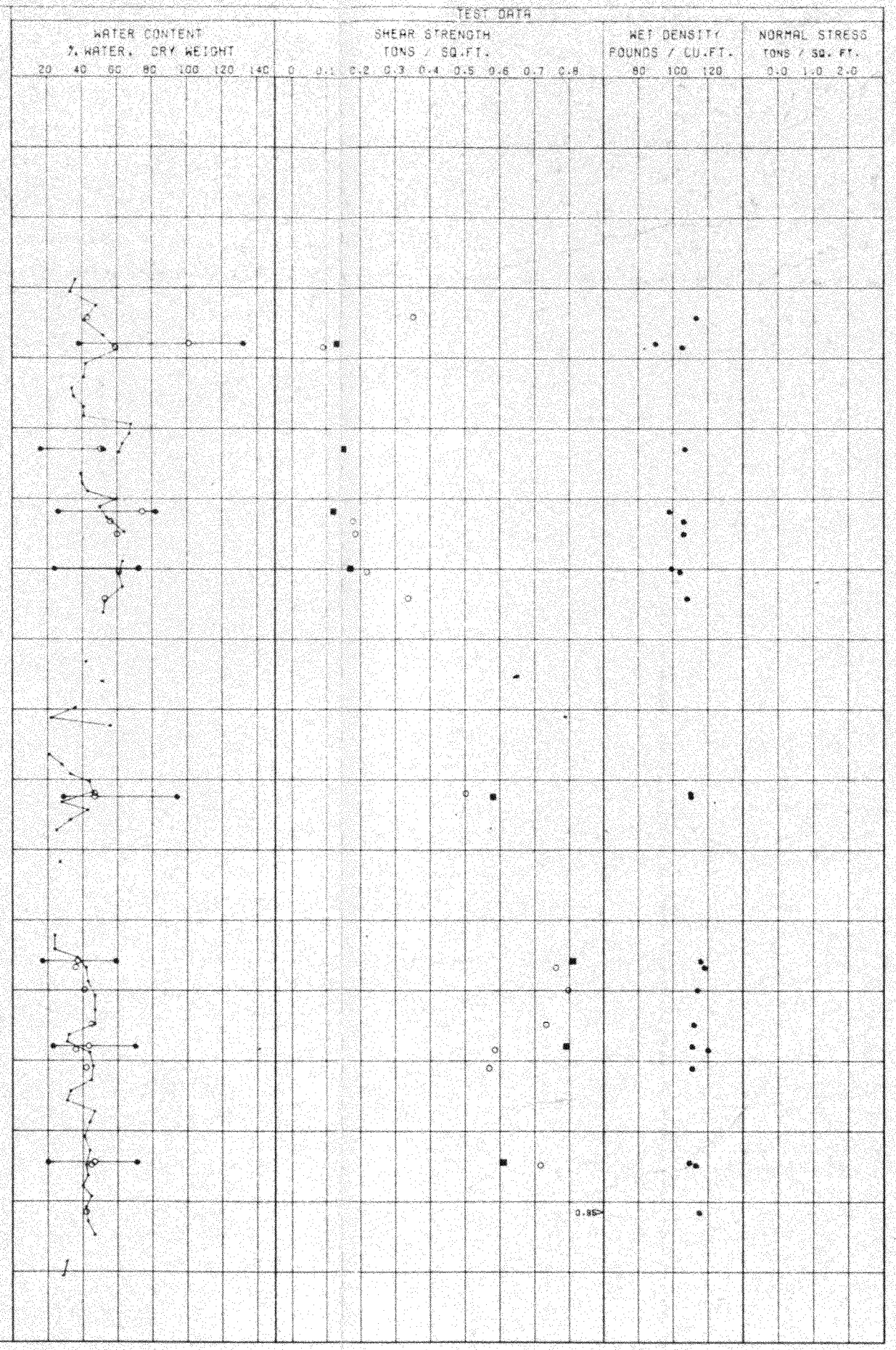

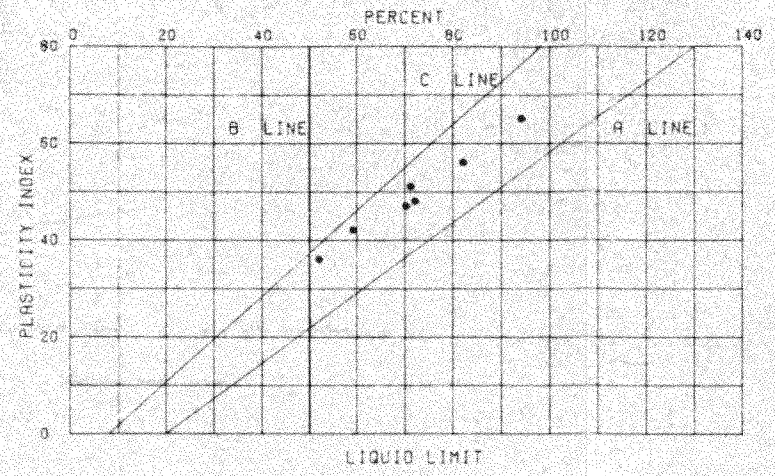

PLASTICITY CHART

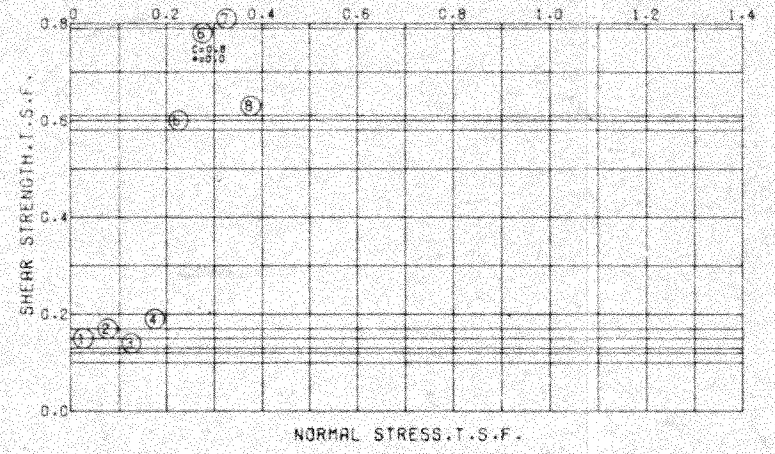

SHEAR STRENGTH DATA

ENVELOPE NO.	ENVELOPE EL.	TYPE	STRENGTH Φ	STRENGTH C - TSF	CLASS
1	-17.90	Q	0.0	0.130	CH
2	-32.90	Q	0.0	0.150	CH
3	-41.80	Q	0.0	0.120	CH
4	-49.90	Q	0.0	0.170	CH
5	-82.40	Q	0.0	0.580	CH
6	-105.80	Q	0.0	0.810	CH
7	-117.90	Q	0.0	0.790	CH
8	-134.40	Q	0.0	0.610	CH

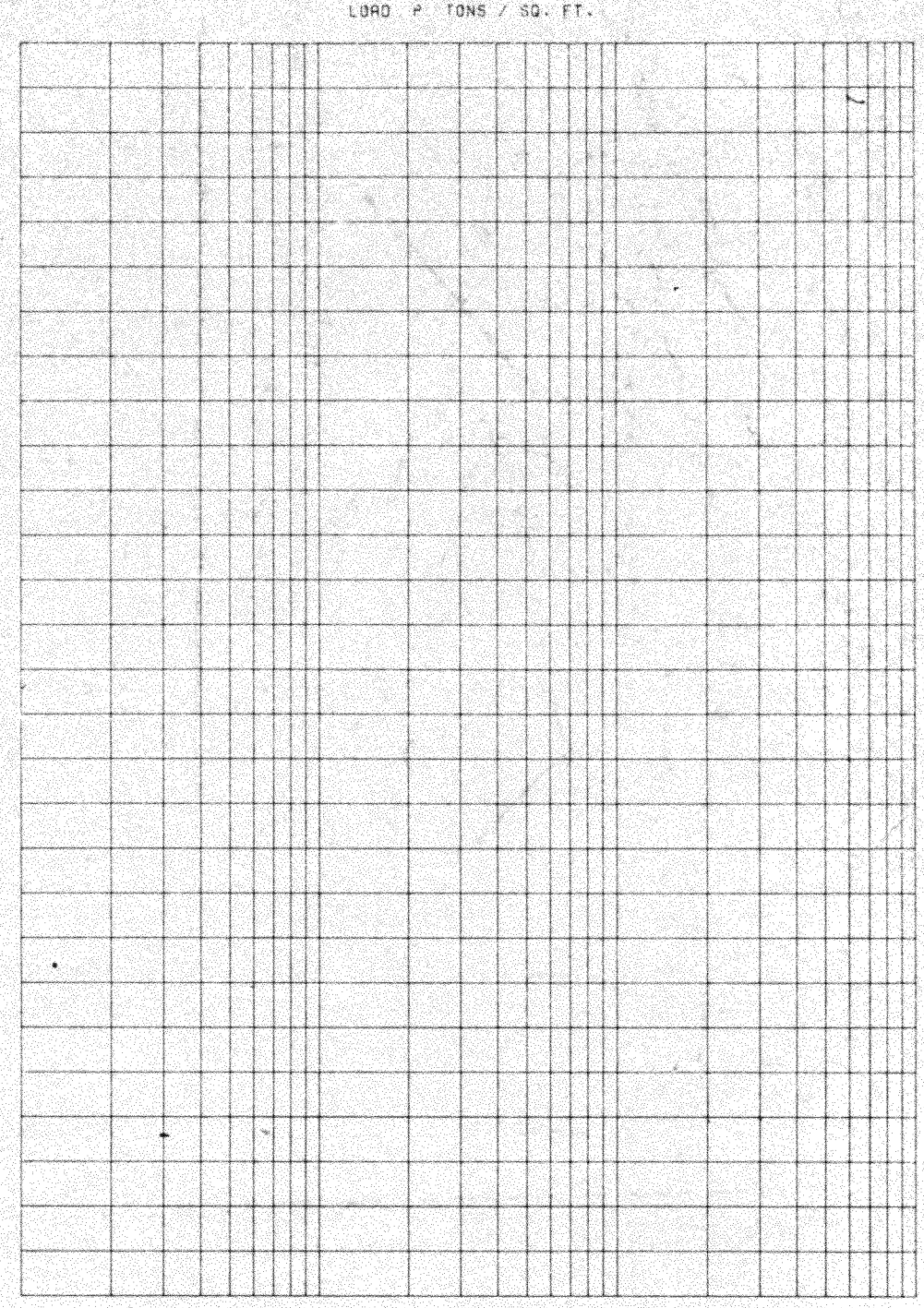

CONSOLIDATION DATA

○ - (UC) UNCONFINED COMPRESSION TEST
■ - (Q) UNCONSOLIDATED - UNDRAINED SHEAR TEST
▲ - (R) CONSOLIDATED - UNDRAINED SHEAR TEST
⊡ - (S) CONSOLIDATED - DRAINED SHEAR TEST

BORINGS WERE TAKEN WITH A 5 INCH DIAMETER STEEL TUBE PISTON TYPE SAMPLER

FOR SOIL BORING LEGEND SEE PLATE A

FOR LOCATION OF BORING SEE PLATE

MISSISSIPPI RIVER - GULF OUTLET
NEW LOCK AND CONNECTING CHANNELS
(INDUSTRIAL CANAL LOCK REPLACEMENT)
FEASIBILITY STUDY

BORING 2-SCU
UNDISTURBED BORING

U.S. ARMY ENGINEER DISTRICT, NEW ORLEANS
CORPS OF ENGINEERS
NEW ORLEANS, LOUISIANA

DESIGNED BY: T.G.W.	PLOT SCALE: 10	PLOT DATE: JUN 93	CADD FILE:	
DRAWN BY: K.J.T.			FILE NO.	H-2-40392
CHECKED BY: K.J.T.	DATE: JUN 93			

BOR. 2-SCU
STA. 3+90
90 FT. EAST B/L

19-21 SEP 78

ELEVATIONS IN FEET - N.G.V.D.

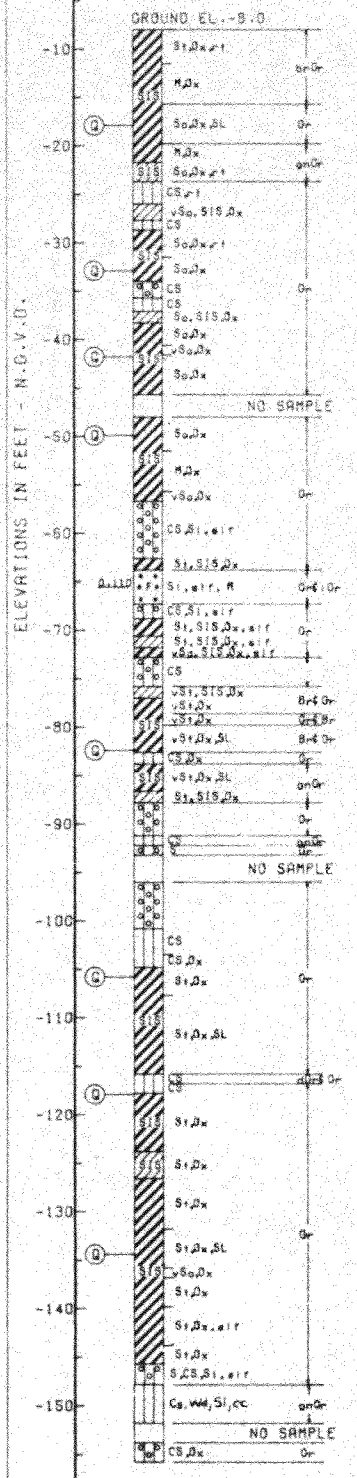

TEST DATA

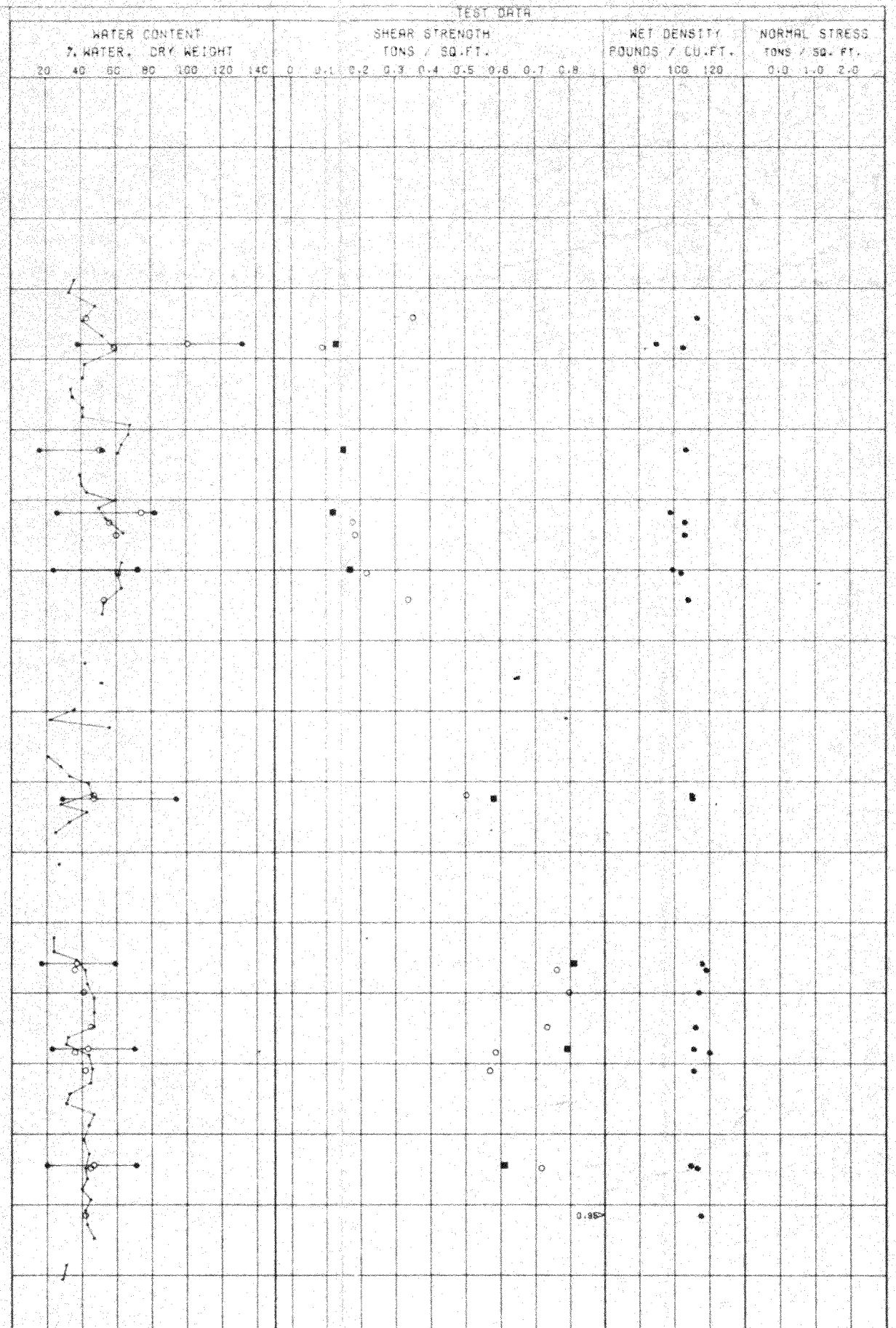

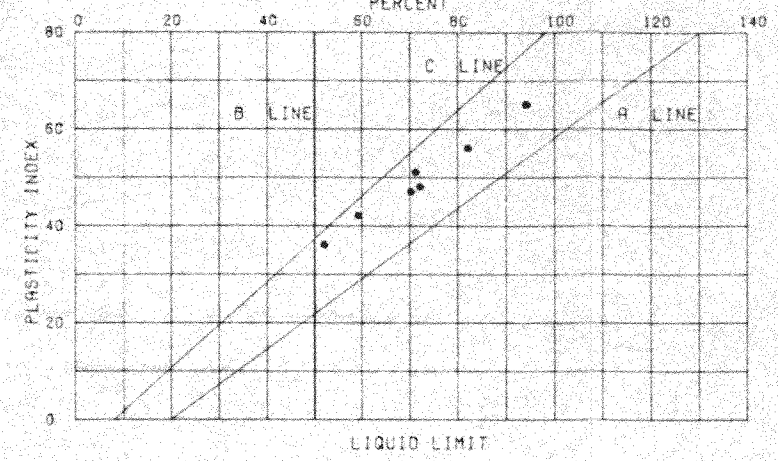

PLASTICITY CHART

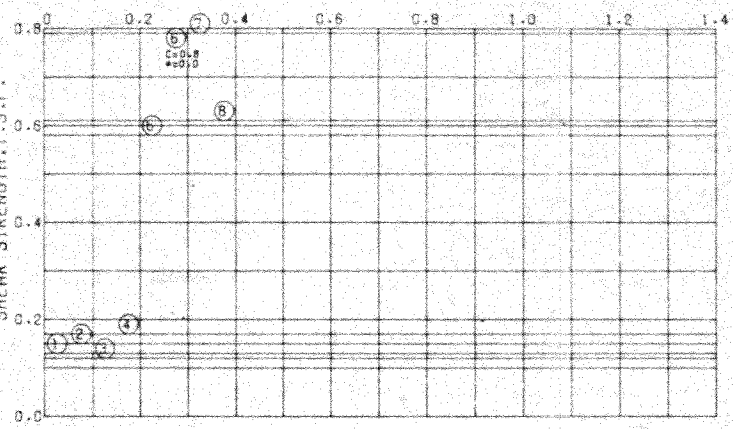

SHEAR STRENGTH DATA

ENVELOPE NO.	ENVELOPE EL.	TYPE	STRENGTH Φ	STRENGTH C - TSF	CLASS
1	-17.90	Q	0.0	0.130	CH
2	-32.90	Q	0.0	0.150	CH
3	-41.80	Q	0.0	0.120	CH
4	-49.90	Q	0.0	0.170	CH
5	-82.40	Q	0.0	0.580	CH
6	-105.80	Q	0.0	0.810	CH
7	-117.90	Q	0.0	0.790	CH
8	-134.40	Q	0.0	0.610	CH

○ - (UC) UNCONF
■ - (Q) UNCONSO
▲ - (R) CONSOLI
▣ - (S) CONSOLI

BORINGS WERE TAKEN
STEEL TUBE PI
FOR SOIL BORING LE
FOR LOCATION OF BO

VOID RATIO

BOR. 2-IU
STA. 12+90
FT. WEST B/L
24 JUL 78
GROUND EL. 8.6

TEST DATA

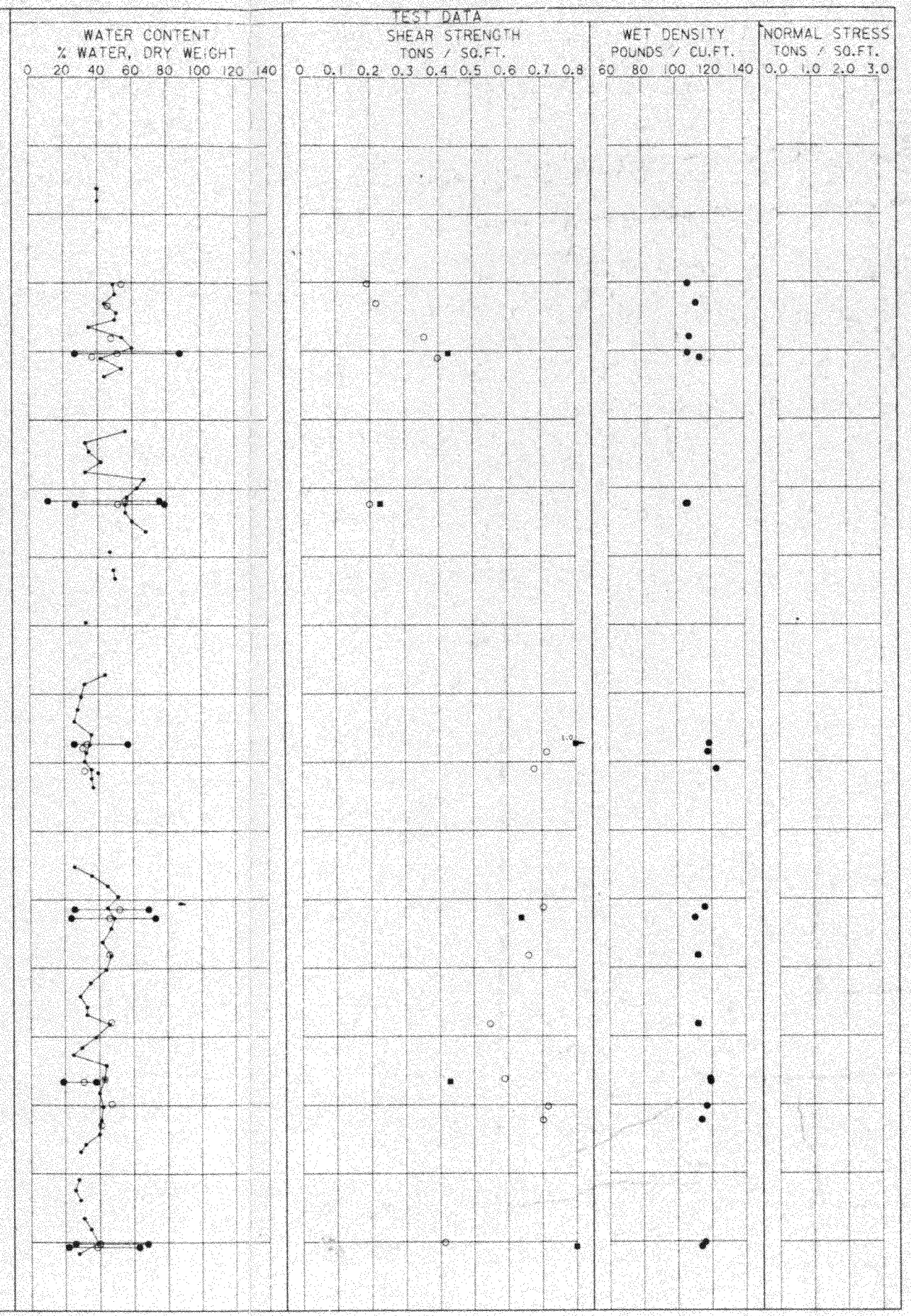

PLASTICITY CHART

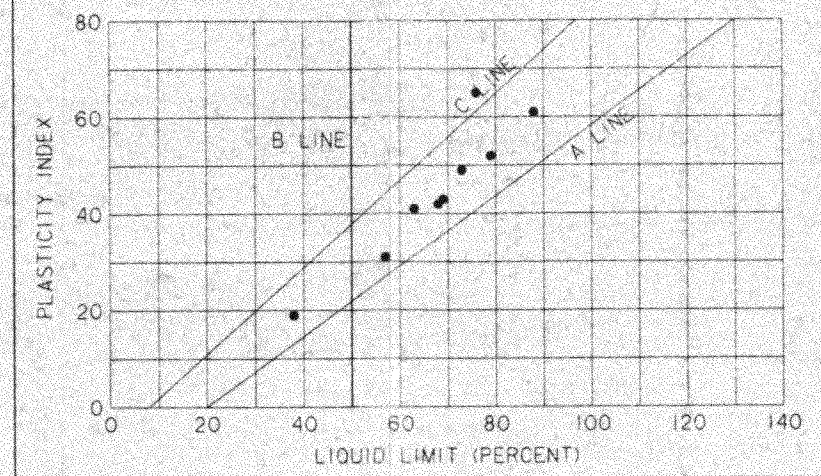

SHEAR STRENGTH DATA

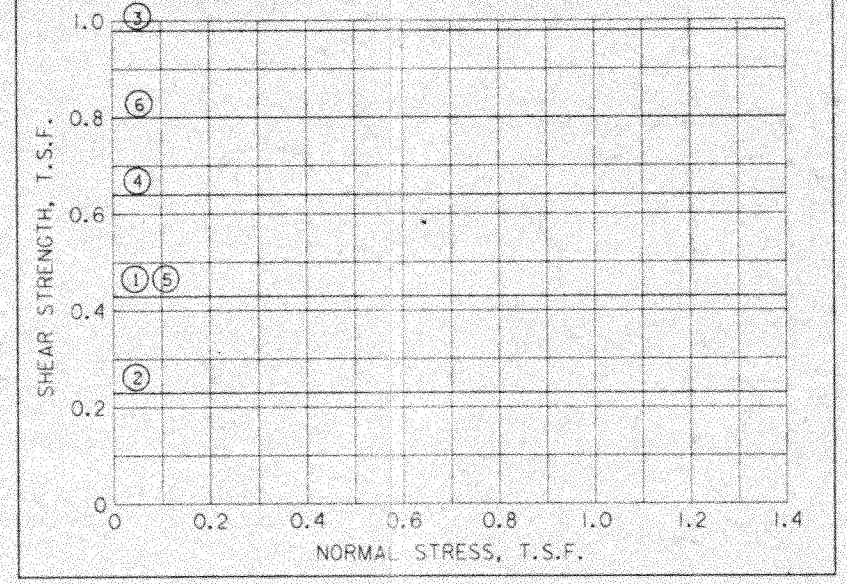

TABULAR TEST DATA

ENVELOPE NO.	ENVELOPE EL.	TYPE	STRENGTH Φ	STRENGTH C - TSF	CLASS
1	-20.3	Q	0.0	0.430	CH
2	-42.3	Q	0.0	0.230	CH
3	-77.3	Q	0.0	0.980	CH
4	-102.7	Q	0.0	0.640	CH
5	-126.6	Q	0.0	0.430	CL
6	-150.7	Q	0.0	0.800	CH

NOTES

- ○ - (UC) UNCONFINED COMPRESSION TEST
- ■ - (Q) UNCONSOLIDATED - UNDRAINED TRIAXIAL SHEAR TEST
- ▲ - (R) CONSOLIDATED - UNDRAINED TRIAXIAL SHEAR TEST
- ⊡ - (S) CONSOLIDATED - DRAINED DIRECT SHEAR TEST
- ω_P ●——○——● ω_L ATTERBERG LIMITS

BORING WAS TAKEN WITH A 5 INCH DIAMETER STEEL TUBE PISTON TYPE SAMPLER.
FOR SOIL BORING LEGEND SEE PLATE A.
FOR LOCATION OF BORINGS SEE PLATE
FOR DETAILED TEST DATA SEE

C•A•D

MISSISSIPPI RIVER - GULF OUTLET
NEW LOCK AND CONNECTING CHANNELS
(INDUSTRIAL CANAL LOCK REPLACEMENT)
FEASIBILITY STUDY

UNDISTURBED BORING LOG
BORING 2-IU

U.S. ARMY ENGINEER DISTRICT, NEW ORLEANS
CORPS OF ENGINEERS
NEW ORLEANS, LOUISIANA

DESIGNED BY: T.G.W.	PLOT SCALE: 10	PLOT DATE: JUN 93	CADD FILE: 2-IU	
DRAWN BY: T.G.W.			FILE NO.	H-2-40392
CHECKED BY: T.G.W.	DATE: JUN 93			

PLATE B-75

BOR. 2-IU
STA. 12+90
430 FT. WEST B/L
24 JUL 78

W. OF DIO

GROUND EL. 8.6

ELEVATIONS IN FEET - N.G.V.D.

TEST DATA

WATER CONTENT
% WATER, DRY WEIGHT
0 20 40 60 80 100 120 140

SHEAR STRENGTH
TONS / SQ.FT.
0 0.1 0.2 0.3 0.4 0.5 0.6 0.7 0.8

WET DENSITY
POUNDS / CU.FT.
60 80 100 120 140

NORMAL STRESS
TONS / SQ.FT.
0.0 1.0 2.0 3.0

PLASTICITY CHART

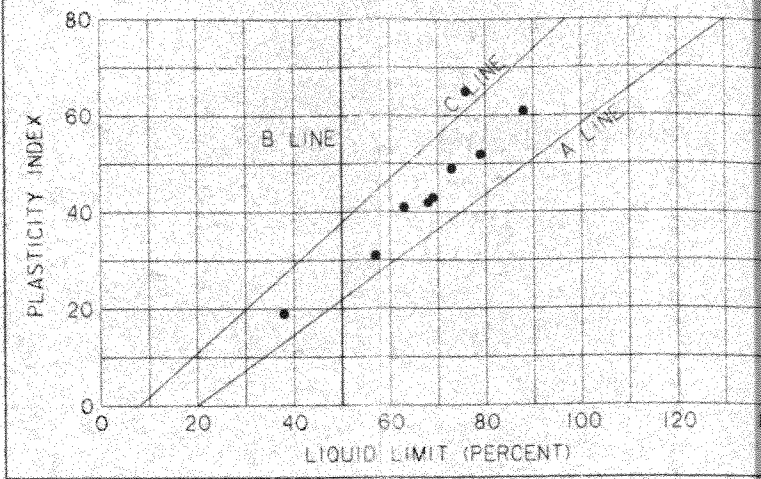

SHEAR STRENGTH DATA

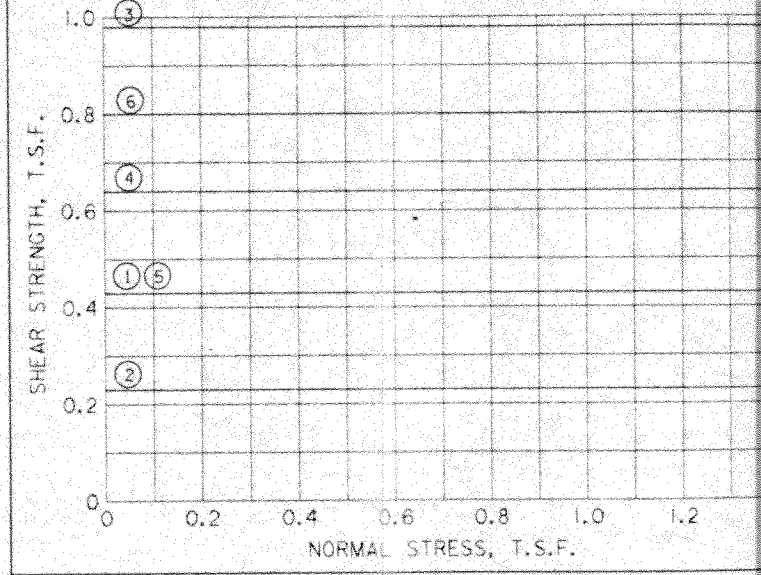

NOTES

- ○ - (UC) UNCONFINED COMPRESSION TEST
- ■ - (Q) UNCONSOLIDATED - UNDRAINED TRIAXIAL SHEAR TEST
- ▲ - (R) CONSOLIDATED - UNDRAINED TRIAXIAL SHEAR TEST
- ⊡ - (S) CONSOLIDATED - DRAINED DIRECT SHEAR TEST
- ω_P ω_N ω_L ATTERBERG LIMITS

BORING WAS TAKEN WITH A 5 INCH DIAMETER STEEL TUBE PISTON TYPE SAMPLER.
FOR SOIL BORING LEGEND SEE PLATE A.
FOR LOCATION OF BORINGS SEE PLATE
FOR DETAILED TEST DATA SEE

OR. 2-IU
STA. 12+90
FT. WEST B/L
24 JUL 78

TEST DATA

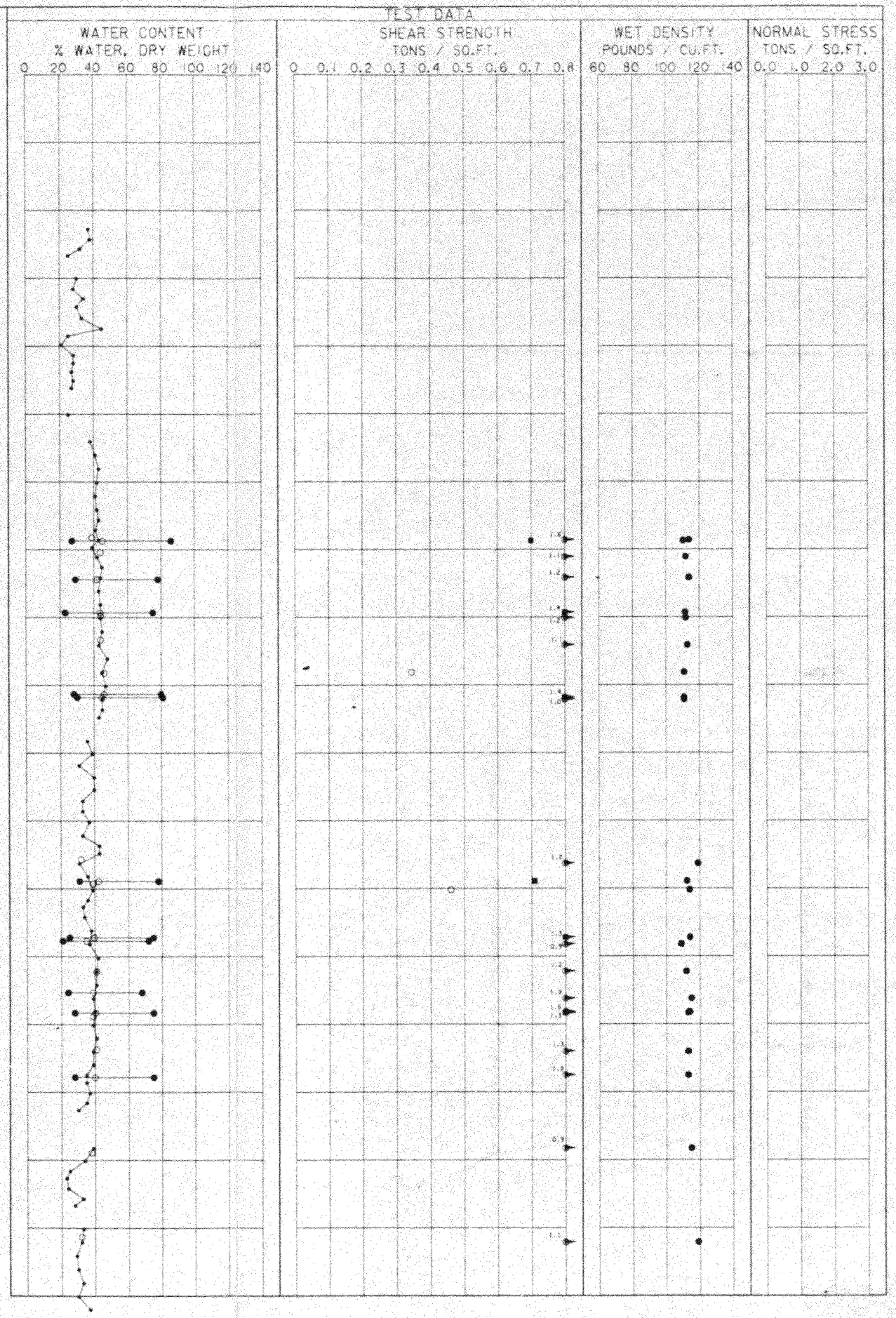

PLASTICITY CHART

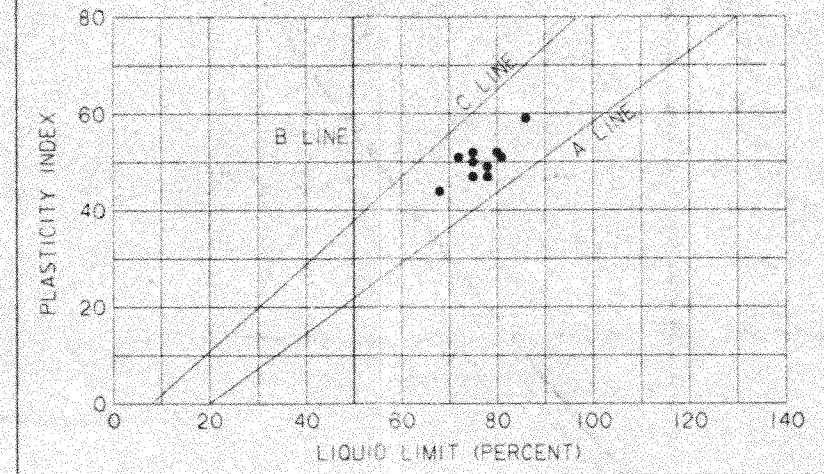

SHEAR STRENGTH DATA

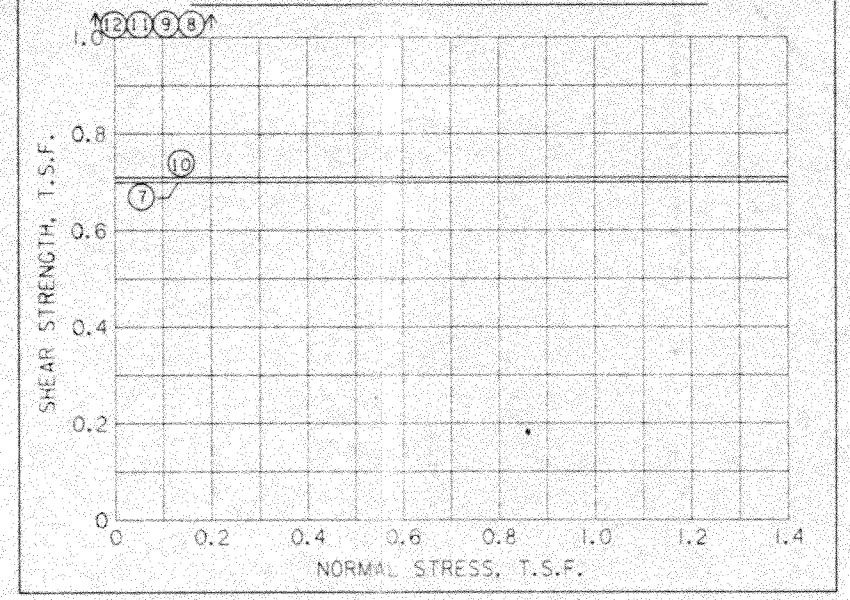

TABULAR TEST DATA

ENVELOPE NO.	ENVELOPE EL.	TYPE	STRENGTH Φ	STRENGTH C - TSF	CLASS
7	-198.7	Q	0.0	0.700	CH
8	-209.3	Q	0.0	1.400	CH
9	-221.8	Q	0.0	1.380	CH
10	-248.9	Q	0.0	0.710	CH
11	-257.2	Q	0.0	1.320	CH
12	-268.3	Q	0.0	1.310	CH

NOTES

- ○ - (UC) UNCONFINED COMPRESSION TEST
- ■ - (Q) UNCONSOLIDATED - UNDRAINED TRIAXIAL SHEAR TEST
- ▲ - (R) CONSOLIDATED - UNDRAINED TRIAXIAL SHEAR TEST
- ⊟ - (S) CONSOLIDATED - DRAINED DIRECT SHEAR TEST
- ω_P ω_N ω_L ATTERBERG LIMITS

BORING WAS TAKEN WITH A 5 INCH DIAMETER STEEL TUBE PISTON TYPE SAMPLER.
FOR SOIL BORING LEGEND SEE PLATE A.
FOR LOCATION OF BORINGS SEE PLATE
FOR DETAILED TEST DATA SEE

C·A·D

MISSISSIPPI RIVER - GULF OUTLET
NEW LOCK AND CONNECTING CHANNELS
(INDUSTRIAL CANAL LOCK REPLACEMENT)
FEASIBILITY STUDY

UNDISTURBED BORING LOG
BORING 2-IU CONT'D

U.S. ARMY ENGINEER DISTRICT, NEW ORLEANS
CORPS OF ENGINEERS
NEW ORLEANS, LOUISIANA

DESIGNED BY:	T.G.W.	PLOT SCALE:	PLOT DATE:	CADD FILE:	2-IU
DRAWN BY:	T.G.W.	10	JUN 93	FILE NO.	H-2-40392
CHECKED BY:	T.G.W.	DATE:	JUN 93		

BOR. 2-IU
STA. 12+90
430 FT. WEST B/L
24 JUL 78

ELEVATIONS IN FEET - N.G.V.D.

TEST DATA

WATER CONTENT
% WATER, DRY WEIGHT
0 20 40 60 80 100 120 140

SHEAR STRENGTH
TONS / SQ.FT.
0 0.1 0.2 0.3 0.4 0.5 0.6 0.7 0.8

WET DENSITY
POUNDS / CU.FT.
60 80 100 120 140

NORMAL STRESS
TONS / SQ.FT.
0.0 1.0 2.0 3.0

PLASTICITY CHART

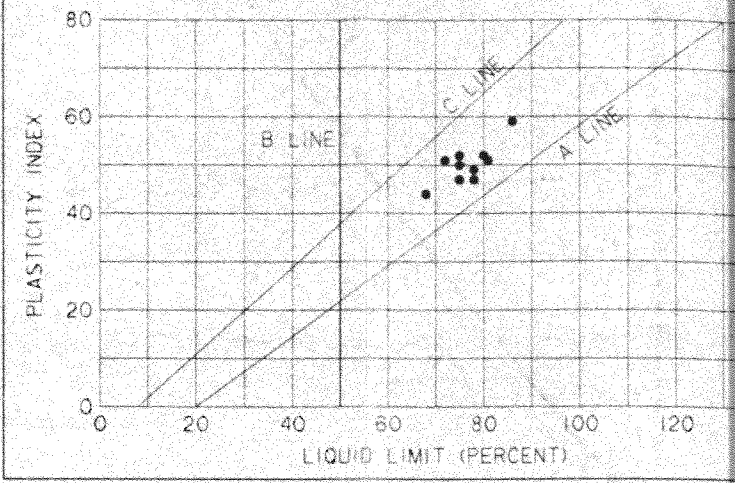

SHEAR STRENGTH DATA

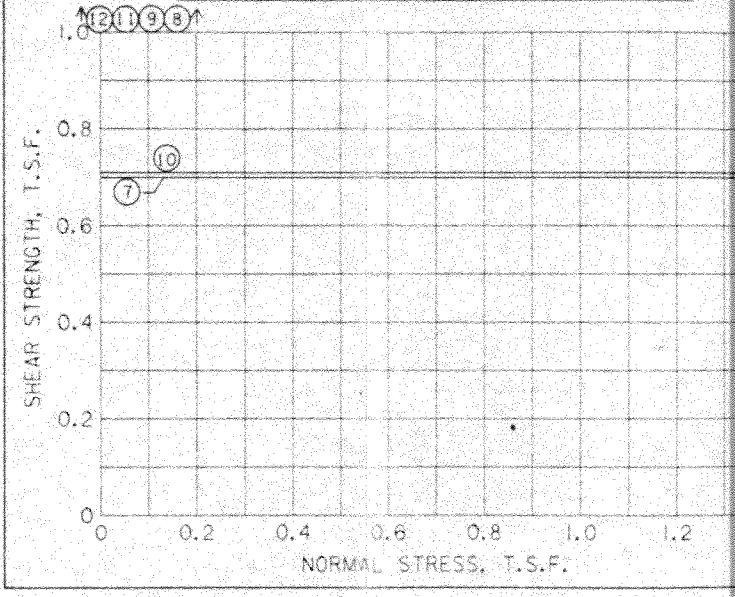

NOTES

- ○ - (UC) UNCONFINED COMPRESSION TEST
- ■ - (Q) UNCONSOLIDATED - UNDRAINED TRIAXIAL SHEAR TEST
- ▲ - (R) CONSOLIDATED - UNDRAINED TRIAXIAL SHEAR TEST
- ⊡ - (S) CONSOLIDATED - DRAINED DIRECT SHEAR TEST
- ω_P ω_N ω_L ATTERBERG LIMITS

BORING WAS TAKEN WITH A 5 INCH DIAMETER STEEL TUBE PISTON TYPE SAMPLER.
FOR SOIL BORING LEGEND SEE PLATE A.
FOR LOCATION OF BORINGS SEE PLATE
FOR DETAILED TEST DATA SEE

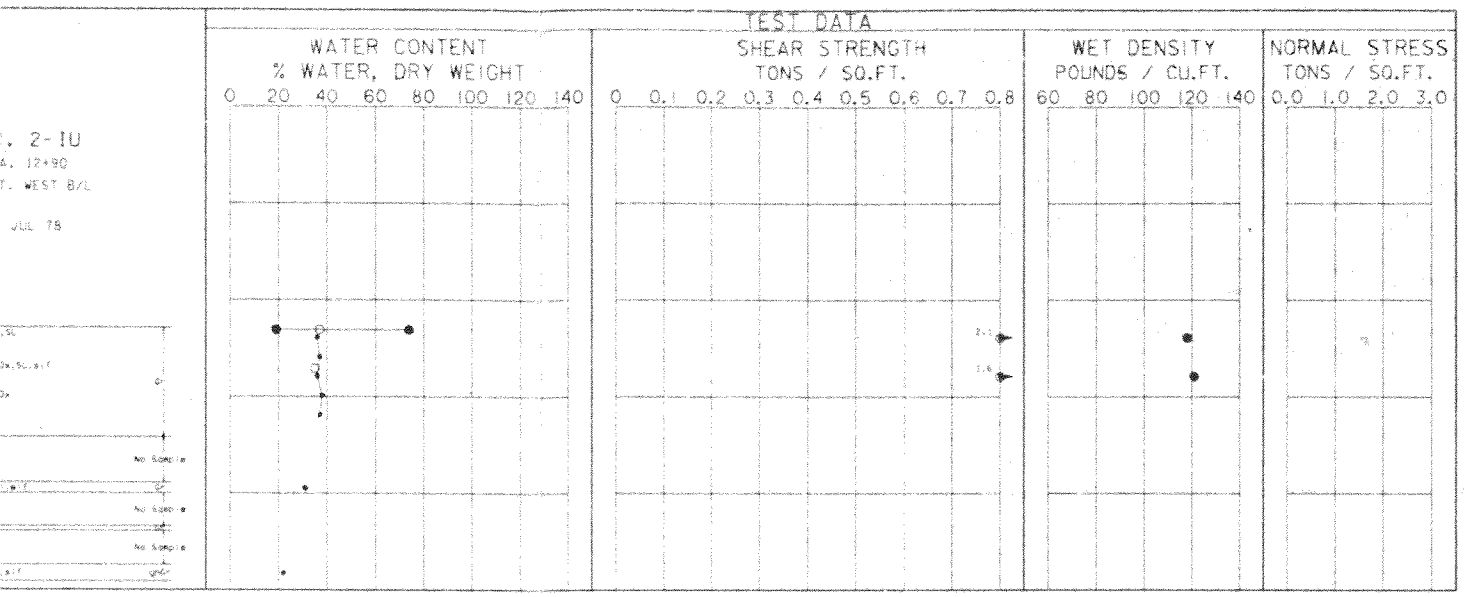

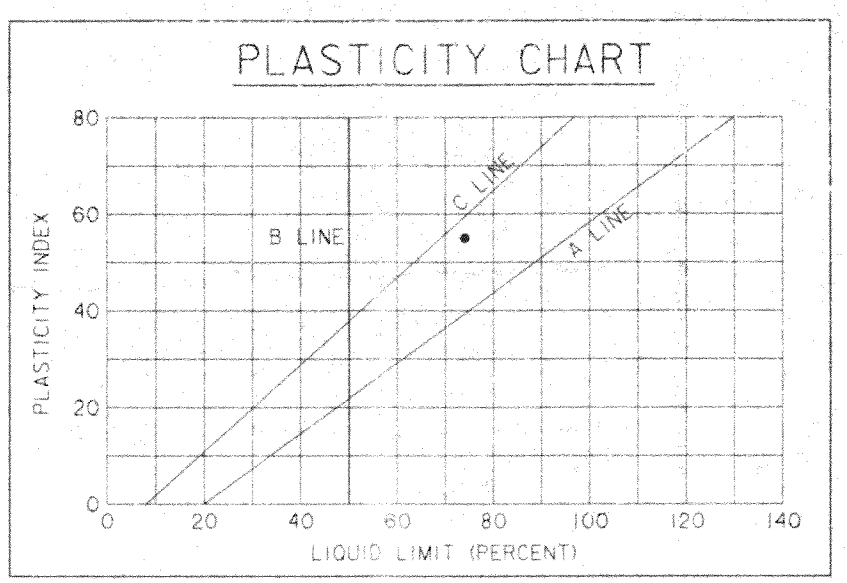

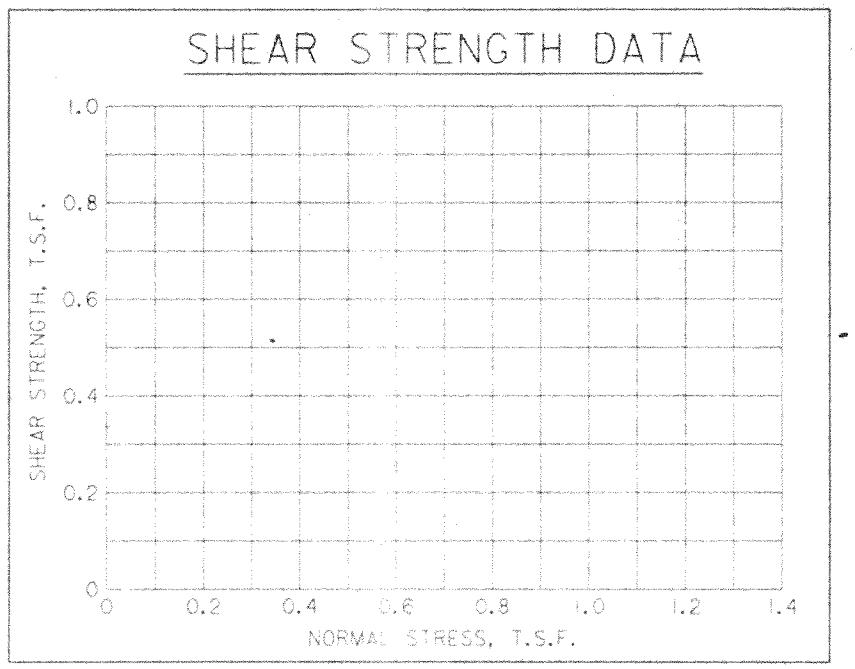

TABULAR TEST DATA

ENVELOPE NO.	ENVELOPE EL.	TYPE	STRENGTH Φ	STRENGTH C - TSF	CLASS

NOTES

○ - (UC) UNCONFINED COMPRESSION TEST
■ - (Q) UNCONSOLIDATED - UNDRAINED TRIAXIAL SHEAR TEST
▲ - (R) CONSOLIDATED - UNDRAINED TRIAXIAL SHEAR TEST
□ - (S) CONSOLIDATED - DRAINED DIRECT SHEAR TEST
ω_P ω_N ω_L ATTERBERG LIMITS

BORING WAS TAKEN WITH A 5 INCH DIAMETER STEEL TUBE PISTON TYPE SAMPLER.
FOR SOIL BORING LEGEND SEE PLATE A.
FOR LOCATION OF BORINGS SEE PLATE
FOR DETAILED TEST DATA SEE

C·A·D

MISSISSIPPI RIVER - GULF OUTLET
NEW LOCK AND CONNECTING CHANNELS
(INDUSTRIAL CANAL LOCK REPLACEMENT)
FEASIBILITY STUDY

UNDISTURBED BORING LOG
BORING 2-IU CONT'D

U.S. ARMY ENGINEER DISTRICT, NEW ORLEANS
CORPS OF ENGINEERS
NEW ORLEANS, LOUISIANA

DESIGNED BY: T.G.W.	PLOT SCALE: 10	PLOT DATE: JUN 93	CADD FILE: 2-IU	
DRAWN BY: T.G.W.			FILE NO.	
CHECKED BY: T.G.W.	DATE: JUN 93		H-2-40392	

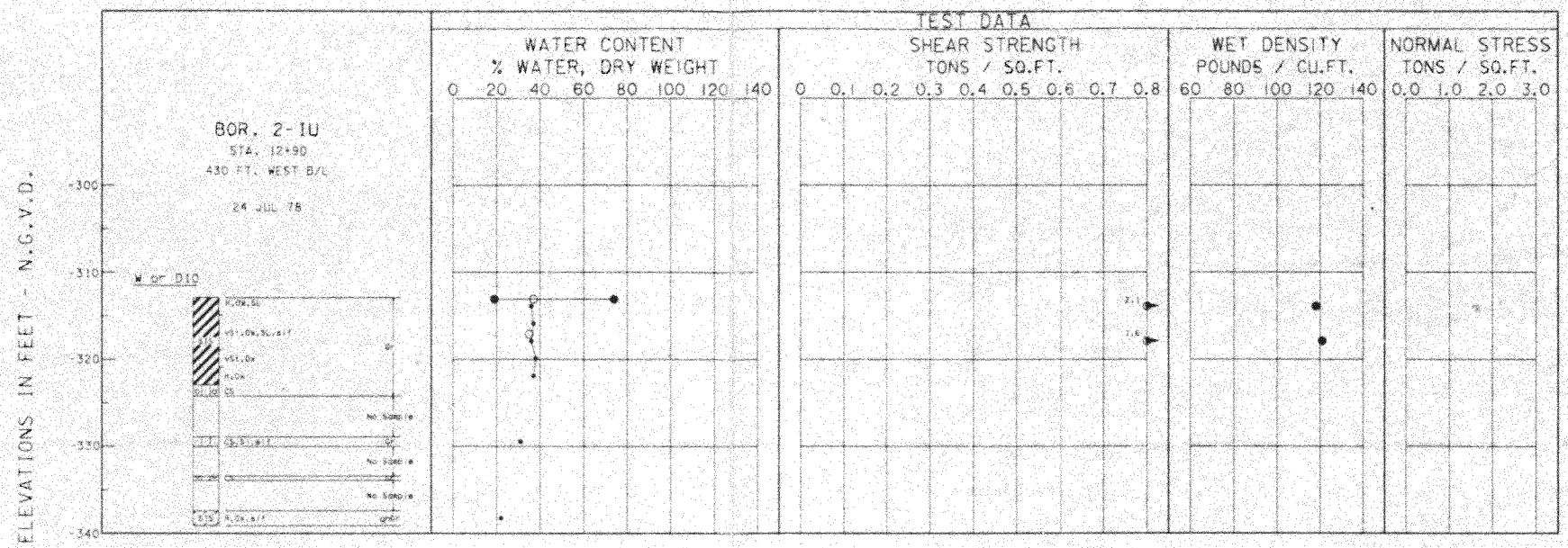

PLASTICITY CHART

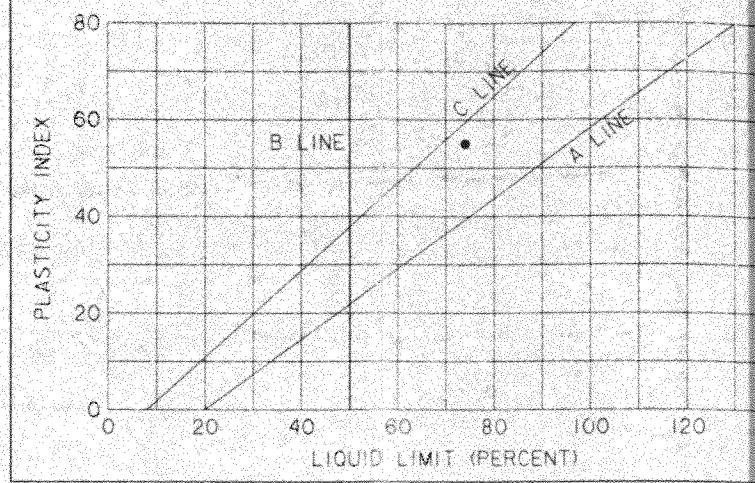

SHEAR STRENGTH DATA

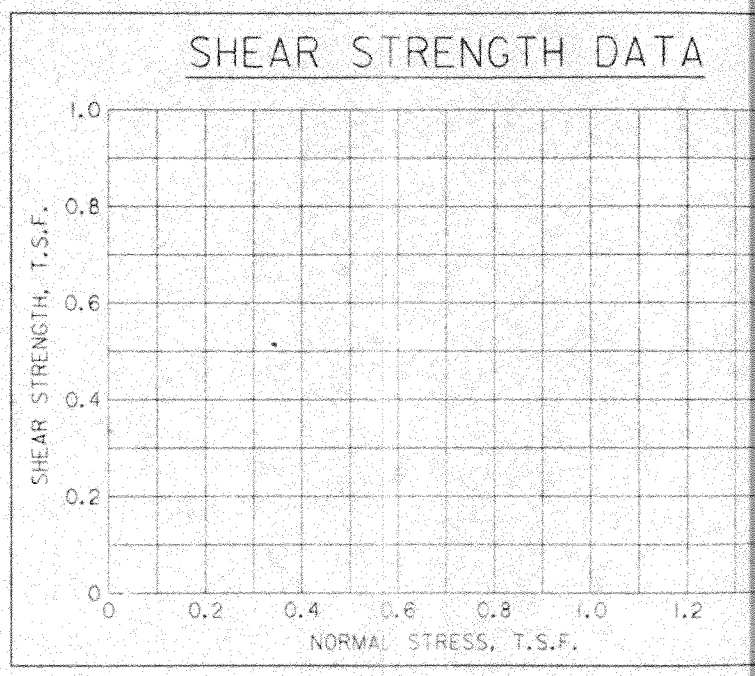

NOTES

- ○ - (UC) UNCONFINED COMPRESSION TEST
- ■ - (Q) UNCONSOLIDATED - UNDRAINED TRIAXIAL SHEAR TEST
- ▲ - (R) CONSOLIDATED - UNDRAINED TRIAXIAL SHEAR TEST
- □ - (S) CONSOLIDATED - DRAINED DIRECT SHEAR TEST
- ω_P ω_N ω_L ATTERBERG LIMITS

BORING WAS TAKEN WITH A 5 INCH DIAMETER STEEL TUBE PISTON TYPE SAMPLER.
FOR SOIL BORING LEGEND SEE PLATE A.
FOR LOCATION OF BORINGS SEE PLATE
FOR DETAILED TEST DATA SEE

4-IU
21+47
WEST OF B/L
FT, NORTH
JUL 79
IND EL. -20.0

TEST DATA

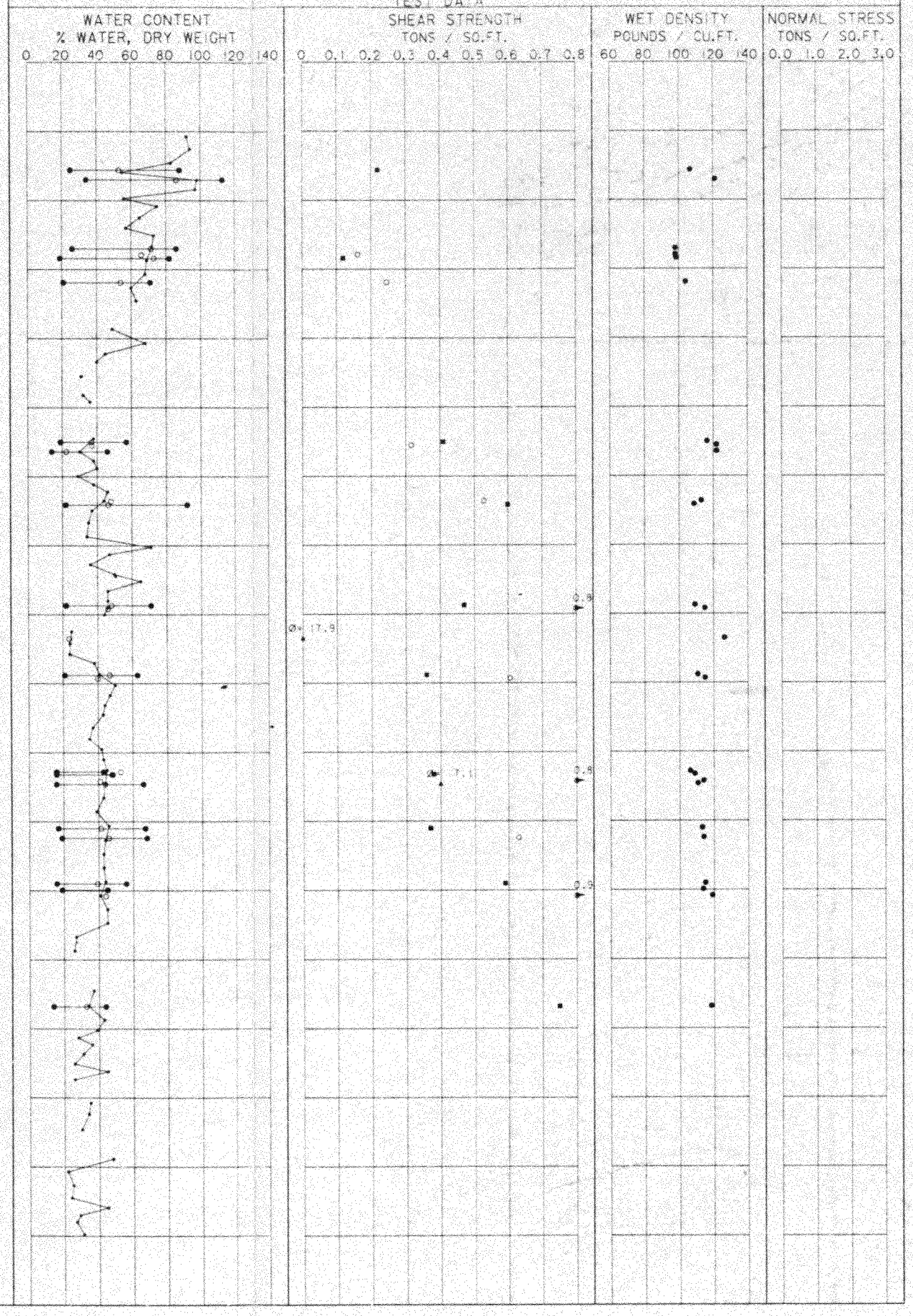

PLASTICITY CHART

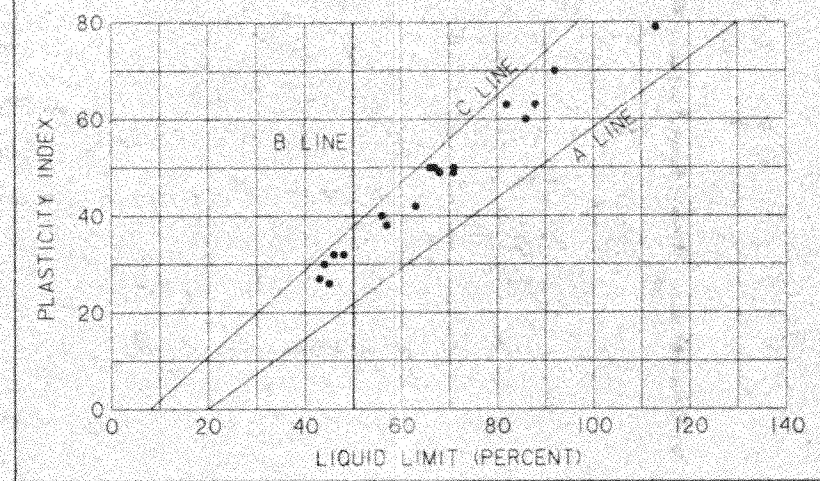

SHEAR STRENGTH DATA

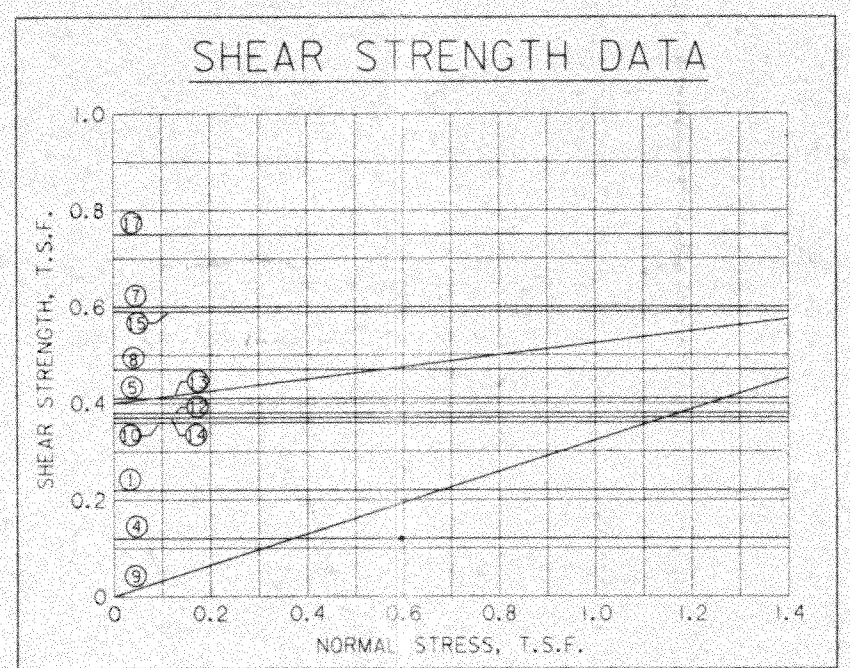

TABULAR TEST DATA

ENVELOPE NO.	ENVELOPE EL.	TYPE	STRENGTH Φ	STRENGTH C - TSF	CLASS
1	-25.6	Q	0.0	0.220	CH
2	-27.0	C	0.0	0.000	CH
3	-37.0	C	0.0	0.000	CH
4	-38.4	Q	0.0	0.120	CH
5	-65.0	Q	0.0	0.410	CH
6	-66.4	C	0.0	0.000	CH
7	-74.1	Q	0.0	0.600	CH
8	-88.7	Q	0.0	0.470	CH
9	-93.5	R	17.9	0.000	ML
10	-98.8	Q	0.0	0.360	CH
11	-112.8	C	0.0	0.000	CH
12	-113.2	Q	0.0	0.380	CH
13	-114.6	R	7.1	0.400	CH
14	-121.0	Q	0.0	0.370	CH
15	-129.0	Q	0.0	0.590	CH
16	-129.9	C	0.0	0.000	CH
17	-146.8	Q	0.0	0.750	CH

NOTES

- ○ - (UC) UNCONFINED COMPRESSION TEST
- ■ - (Q) UNCONSOLIDATED - UNDRAINED TRIAXIAL SHEAR TEST
- ▲ - (R) CONSOLIDATED - UNDRAINED TRIAXIAL SHEAR TEST
- ⊡ - (S) CONSOLIDATED - DRAINED DIRECT SHEAR TEST
- ω_P ●——○ ω_N ——● ω_L ATTERBERG LIMITS

BORING WAS TAKEN WITH A 5 INCH DIAMETER STEEL TUBE PISTON TYPE SAMPLER.
FOR SOIL BORING LEGEND SEE PLATE A.
FOR LOCATION OF BORINGS SEE PLATE
FOR DETAILED TEST DATA SEE

C·A·D

MISSISSIPPI RIVER - GULF OUTLET
NEW LOCK AND CONNECTING CHANNELS
(INDUSTRIAL CANAL LOCK REPLACEMENT)
FEASIBILITY STUDY

UNDISTURBED BORING LOG
BORING 4-IU

U.S. ARMY ENGINEER DISTRICT, NEW ORLEANS
CORPS OF ENGINEERS
NEW ORLEANS, LOUISIANA

DESIGNED BY: T.G.W.	PLOT SCALE: 10	PLOT DATE: JUN 93	CADD FILE: 4-IU	
DRAWN BY: T.G.W.			FILE NO.	H-2-40392
CHECKED BY: T.G.W.	DATE: JUN 93			

PLATE B-74

BOR. 4-IU
STA. 21+47
100 FT. WEST OF B/L
THEN 25 FT. NORTH
26 JUL 79

W or DIO

GROUND EL. -20.0

ELEVATIONS IN FEET - N.G.V.D.

-20, -30, -40, -50, -60, -70, -80, -90, -100, -110, -120, -130, -140, -150, -160, -170, -180

0.10.5

No Sample

No Sample

TEST DATA

WATER CONTENT
% WATER, DRY WEIGHT
0 20 40 60 80 100 120 140

SHEAR STRENGTH
TONS / SQ.FT.
0 0.1 0.2 0.3 0.4 0.5 0.6 0.7 0.8

Ø= 17.9

Ø= 7.1

WET DENSITY
POUNDS / CU.FT.
60 80 100 120 140

NORMAL STRESS
TONS / SQ.FT.
0.0 1.0 2.0 3.0

PLASTICITY CHART

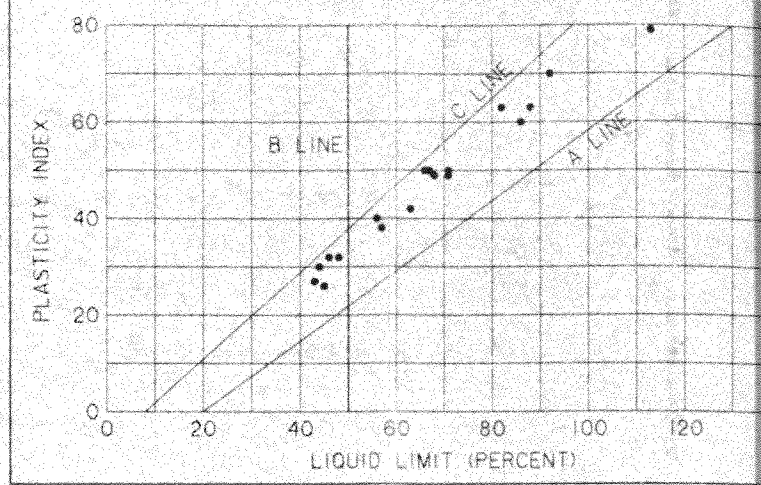

SHEAR STRENGTH DATA

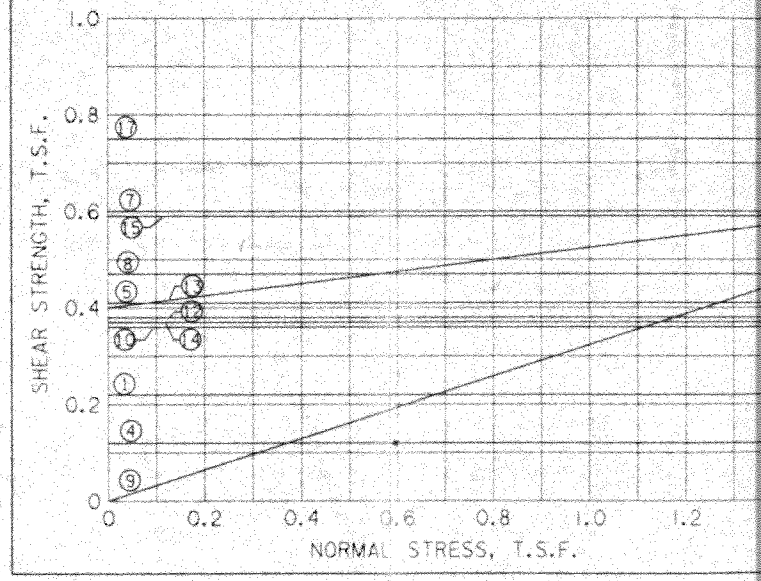

NOTES

- ○ - (UC) UNCONFINED COMPRESSION TEST
- ■ - (Q) UNCONSOLIDATED - UNDRAINED TRIAXIAL SHEAR TEST
- ▲ - (R) CONSOLIDATED - UNDRAINED TRIAXIAL SHEAR TEST
- ⊡ - (S) CONSOLIDATED - DRAINED DIRECT SHEAR TEST
- ω_P ω_N ω_L ATTERBERG LIMITS

BORING WAS TAKEN WITH A 5 INCH DIAMETER STEEL TUBE PISTON TYPE SAMPLER.
FOR SOIL BORING LEGEND SEE PLATE A.
FOR LOCATION OF BORINGS SEE PLATE
FOR DETAILED TEST DATA SEE

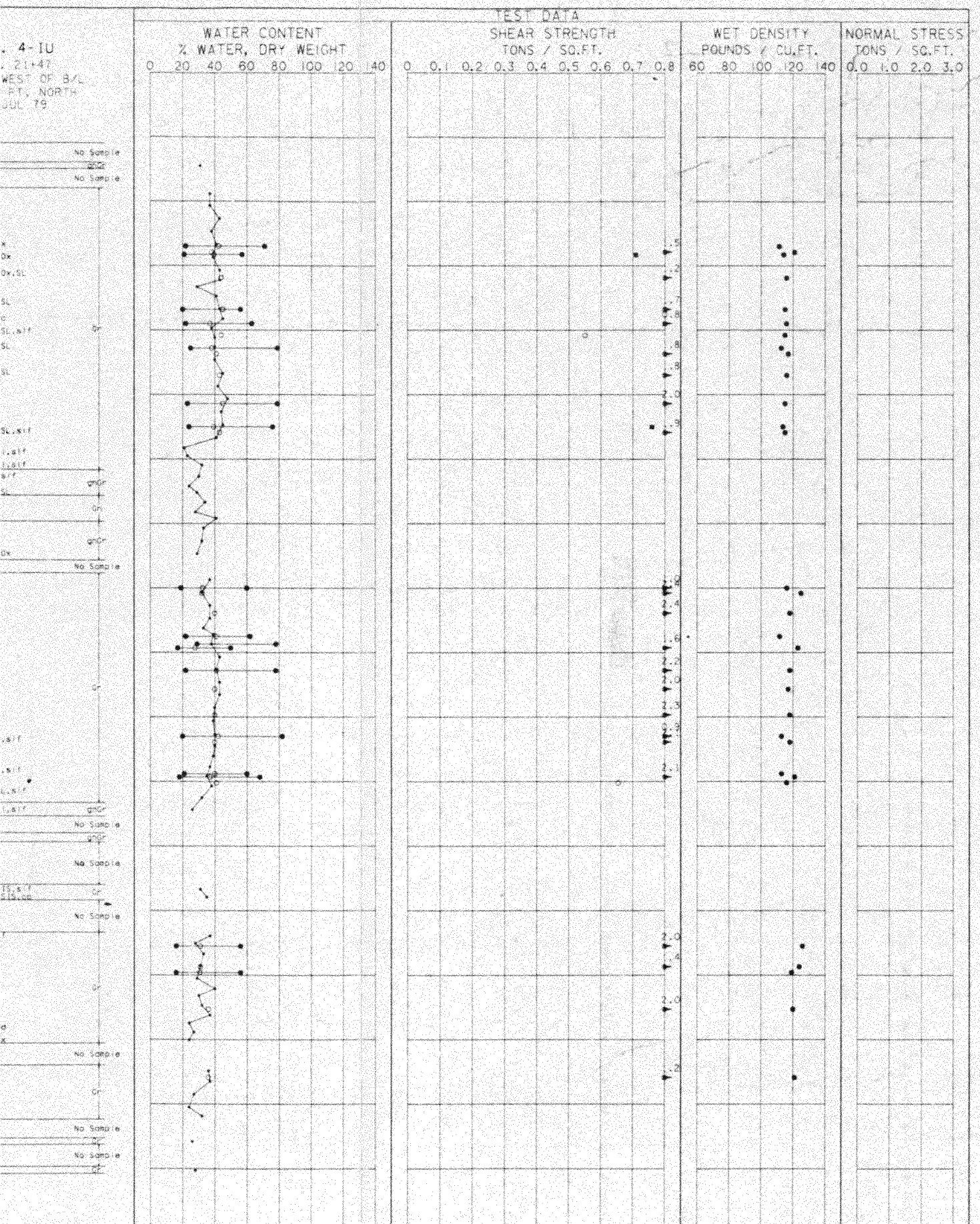

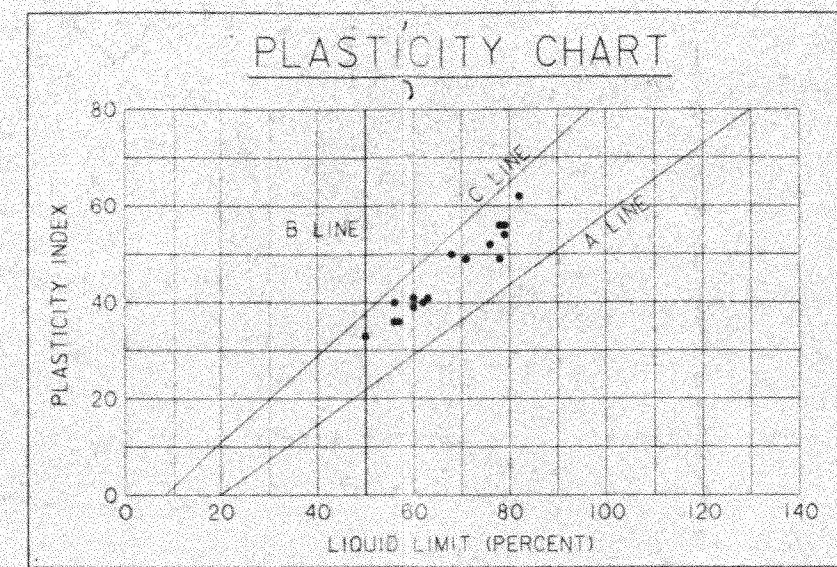

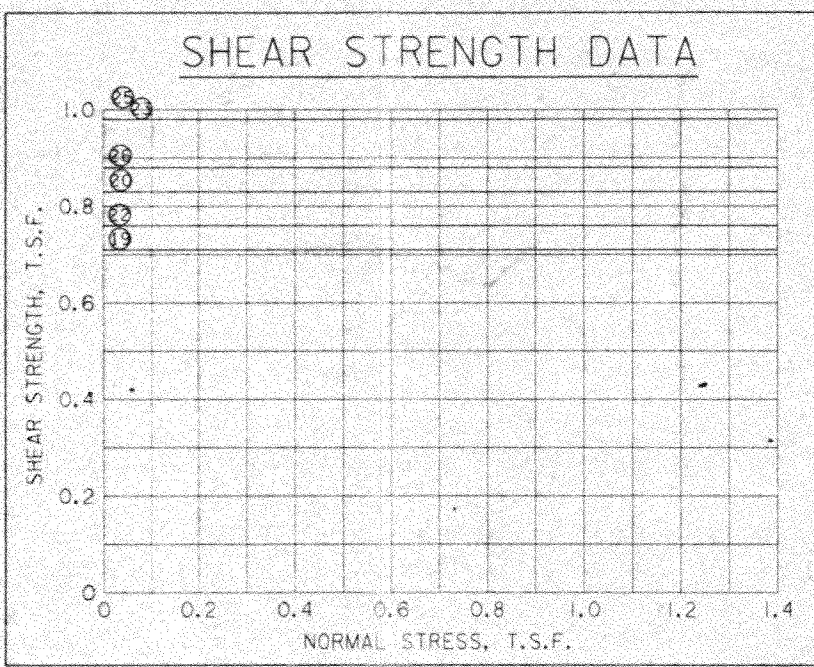

TABULAR TEST DATA

ENVELOPE NO.	ENVELOPE EL.	TYPE	STRENGTH Φ	STRENGTH C TSF	CLASS
18	-197.0	C	0.0	0.000	CH
19	-198.3	Q	0.0	0.710	CH
20	-209.0	Q	0.0	0.830	CH
21	-212.8	C	0.0	0.000	CH
22	-225.0	Q	0.0	0.760	CH
23	-250.0	Q	0.0	0.980	CH
24	-257.5	C	0.0	0.000	CH
25	-259.3	Q	0.0	1.600	CH
26	-273.0	Q	0.0	0.880	CH
27	-278.8	C	0.0	0.000	CH
28	-309.6	C	0.0	0.000	CH

NOTES

○ - (UC) UNCONFINED COMPRESSION TEST
■ - (Q) UNCONSOLIDATED - UNDRAINED TRIAXIAL SHEAR TEST
▲ - (R) CONSOLIDATED - UNDRAINED TRIAXIAL SHEAR TEST
⊡ - (S) CONSOLIDATED - DRAINED DIRECT SHEAR TEST
ω_P ● —— ω_N ○ —— ω_L ● ATTERBERG LIMITS

BORING WAS TAKEN WITH A 5 INCH DIAMETER STEEL TUBE PISTON TYPE SAMPLER.
FOR SOIL BORING LEGEND SEE PLATE A.
FOR LOCATION OF BORINGS SEE PLATE
FOR DETAILED TEST DATA SEE

C·A·D

MISSISSIPPI RIVER - GULF OUTLET
NEW LOCK AND CONNECTING CHANNELS
(INDUSTRIAL CANAL LOCK REPLACEMENT)
FEASIBILITY STUDY

UNDISTURBED BORING LOG
BORING 4-IU CONT'D

U.S. ARMY ENGINEER DISTRICT, NEW ORLEANS
CORPS OF ENGINEERS
NEW ORLEANS, LOUISIANA

DESIGNED BY: T.G.W.	PLOT SCALE: 10	PLOT DATE: JUN 93	CADD FILE: 4-IU	
DRAWN BY: T.G.W.			FILE NO. H-2-40392	
CHECKED BY: T.G.W.	DATE: JUN 93			

BOR. 4-IU
STA. 21+47
100 FT. WEST OF B/L
THEN 25 FT. NORTH
26 JUL. 79

TEST DATA

WATER CONTENT
% WATER, DRY WEIGHT
0 20 40 60 80 100 120 140

SHEAR STRENGTH
TONS / SQ.FT.
0 0.1 0.2 0.3 0.4 0.5 0.6 0.7 0.8

WET DENSITY
POUNDS / CU.FT.
60 80 100 120 140

NORMAL STRESS
TONS / SQ.FT.
0.0 1.0 2.0 3.0

ELEVATIONS IN FEET - N.G.V.D.
-180 -190 -200 -210 -220 -230 -240 -250 -260 -270 -280 -290 -300 -310 -320 -330 -340

W. OF D.10

No Sample
No Sample
No Sample

vSt
vSt
St,Ox
vSt,Ox
vSt,Ox,SL
CS
vSt,SL
St,oo
vSt,SL,slf
vSt,SL
vSt,SL
vSt,SL,slf
CS,St,slf
St,St,slf
vSt,slf
St
vSt,SL
vSt
St
H,Ox
vSt,Ox
No Sample
vSt
H,SL
So
vSt
H,SL
vSt
H,SL
H,SL,slf
vSt
H,SL,slf
St,SL,slf
CS,St,slf
No Sample
CS
No Sample
St,StS,slf
vSt,CS,wd
No Sample
H,slf
vSt
So
vSt
St
CS,wd
CS,Ox
No Sample
vSt
CS
No Sample
No Sample

br
gr/br
br
br
gr/br
br
br
br
br
br
br

PLASTICITY CHART

PLASTICITY INDEX
0 20 40 60 80

LIQUID LIMIT (PERCENT)
0 20 40 60 80 100 120

A LINE
B LINE
C LINE

SHEAR STRENGTH DATA

SHEAR STRENGTH, T.S.F.
0 0.2 0.4 0.6 0.8 1.0

NORMAL STRESS, T.S.F.
0 0.2 0.4 0.6 0.8 1.0 1.2

NOTES

- ○ - (UC) UNCONFINED COMPRESSION TEST
- ■ - (Q) UNCONSOLIDATED - UNDRAINED TRIAXIAL SHEAR TEST
- ▲ - (R) CONSOLIDATED - UNDRAINED TRIAXIAL SHEAR TEST
- ⊡ - (S) CONSOLIDATED - DRAINED DIRECT SHEAR TEST
- ω_P ω_N ω_L ATTERBERG LIMITS

BORING WAS TAKEN WITH A 5 INCH DIAMETER STEEL TUBE PISTON TYPE SAMPLER.
FOR SOIL BORING LEGEND SEE PLATE A.
FOR LOCATION OF BORINGS SEE PLATE
FOR DETAILED TEST DATA SEE

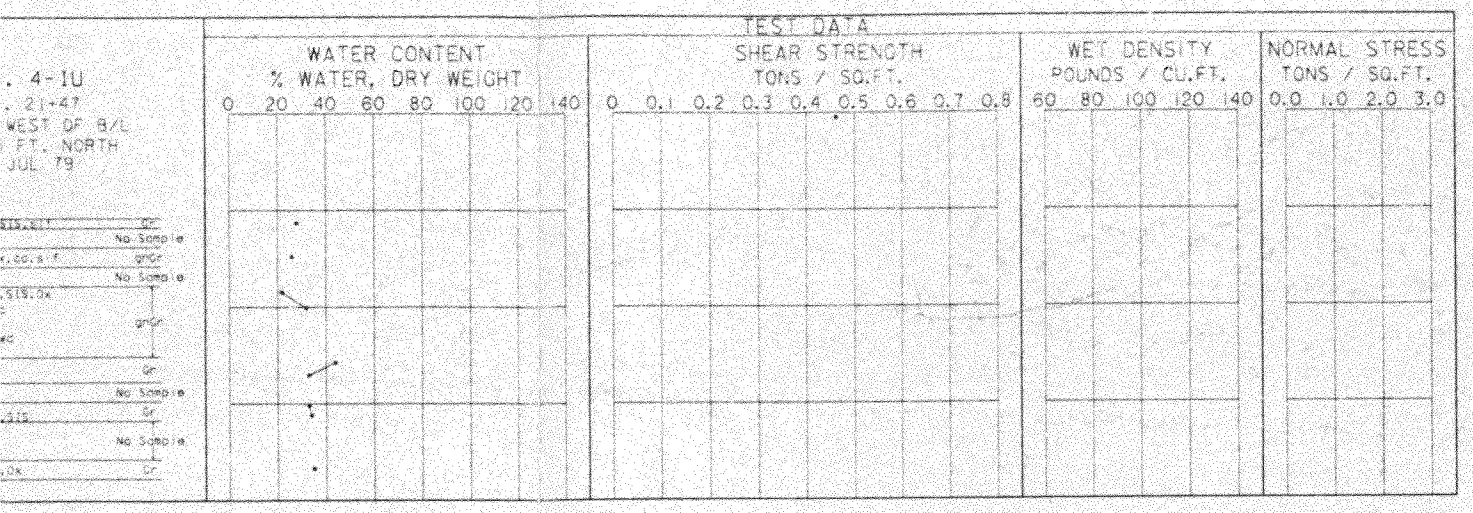

PLASTICITY CHART

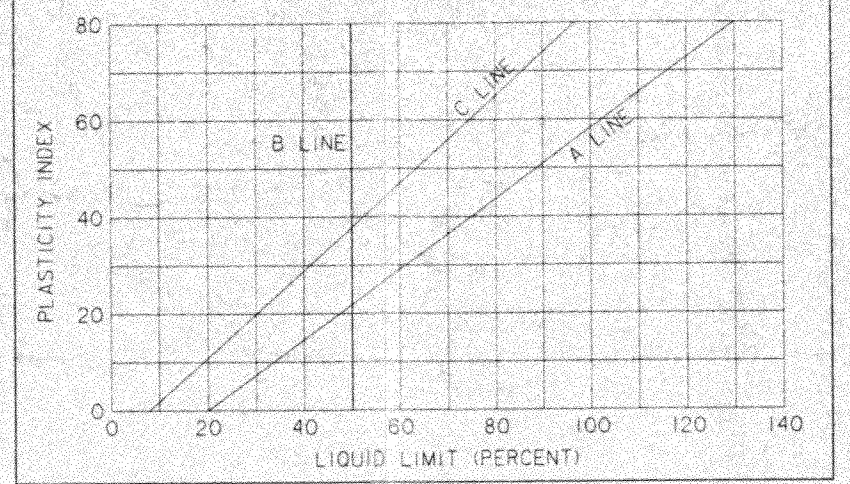

TABULAR TEST DATA

ENVELOPE NO.	ENVELOPE EL.	TYPE	STRENGTH Φ	STRENGTH C - TSF	CLASS

SHEAR STRENGTH DATA

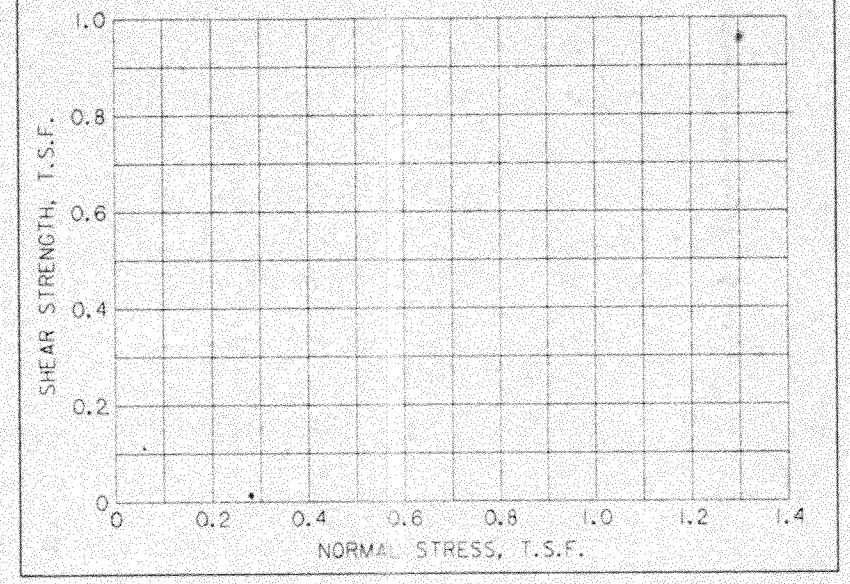

NOTES

- ○ - (UC) UNCONFINED COMPRESSION TEST
- ■ - (Q) UNCONSOLIDATED - UNDRAINED TRIAXIAL SHEAR TEST
- ▲ - (R) CONSOLIDATED - UNDRAINED TRIAXIAL SHEAR TEST
- ⊡ - (S) CONSOLIDATED - DRAINED DIRECT SHEAR TEST
- ω_P ● —— ω_N ○ —— ω_L ● ATTERBERG LIMITS

BORING WAS TAKEN WITH A 5 INCH DIAMETER STEEL TUBE PISTON TYPE SAMPLER.
FOR SOIL BORING LEGEND SEE PLATE A.
FOR LOCATION OF BORINGS SEE PLATE
FOR DETAILED TEST DATA SEE

C·A·D

MISSISSIPPI RIVER GULF OUTLET
NEW LOCK AND CONNECTING CHANNELS
(INDUSTRIAL CANAL LOCK REPLACEMENT)
FEASIBILITY STUDY

UNDISTURBED BORING LOG
BORING 4-IU CONT'D

U.S. ARMY ENGINEER DISTRICT, NEW ORLEANS
CORPS OF ENGINEERS
NEW ORLEANS, LOUISIANA

DESIGNED BY: T.G.W.	PLOT SCALE: 10	PLOT DATE: JUN 93	CADD FILE: 4-IU	
DRAWN BY: T.G.W.			FILE NO. H-2-40392	
CHECKED BY: T.G.W.	DATE: JUN 93			

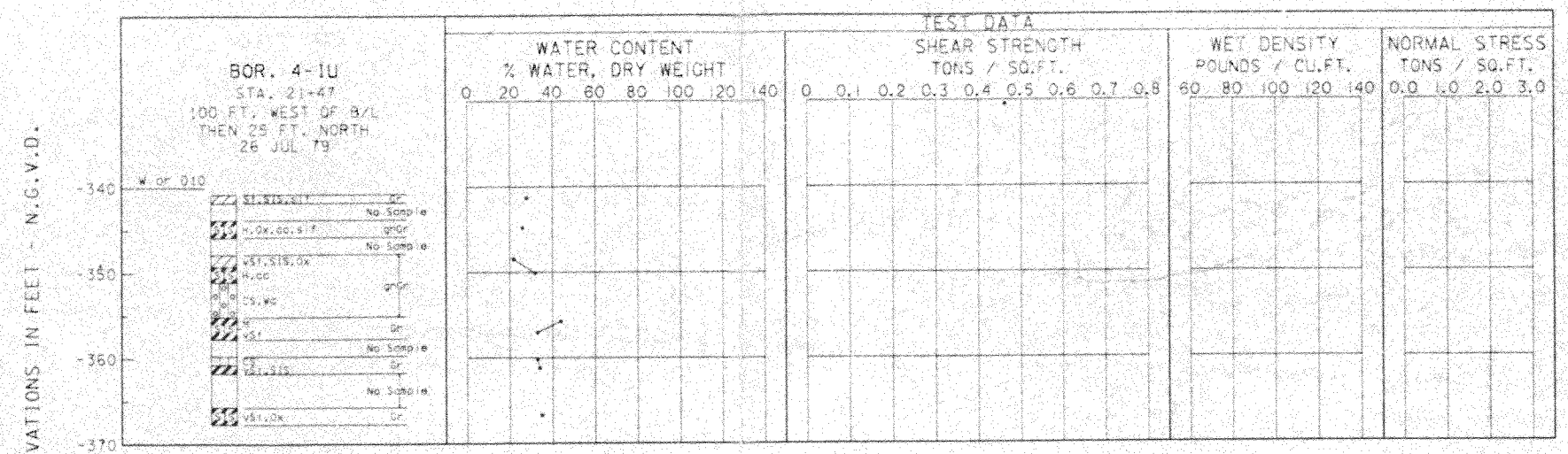

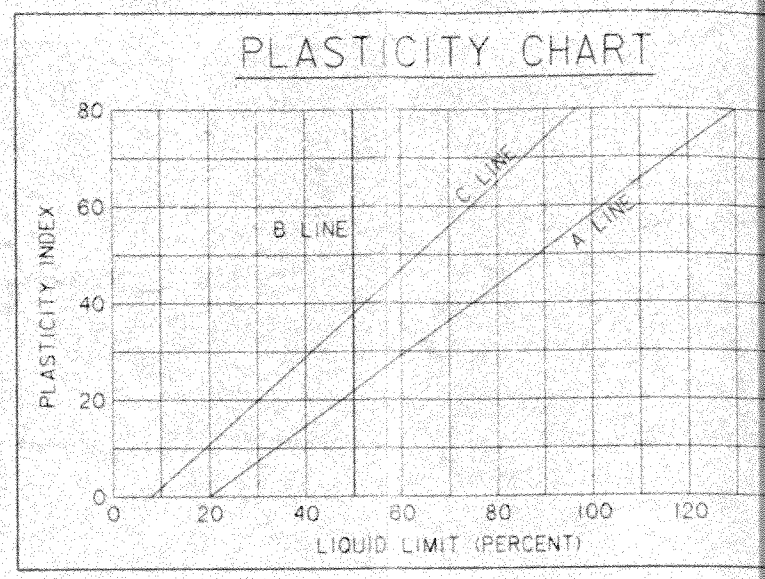

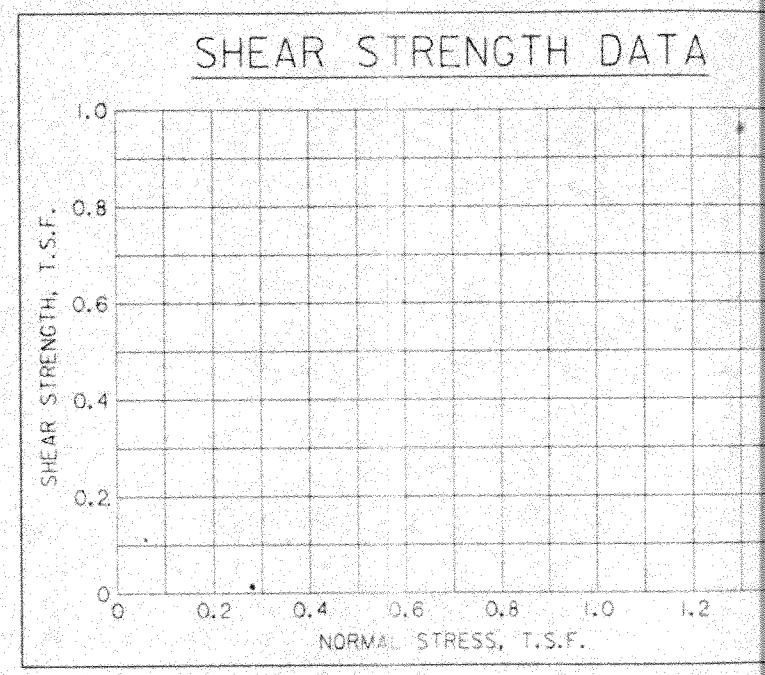

NOTES

- ○ - (UC) UNCONFINED COMPRESSION TEST
- ■ - (Q) UNCONSOLIDATED - UNDRAINED TRIAXIAL SHEAR TEST
- ▲ - (R) CONSOLIDATED - UNDRAINED TRIAXIAL SHEAR TEST
- ⊡ - (S) CONSOLIDATED - DRAINED DIRECT SHEAR TEST
- ω_P ω_N ω_L - ATTERBERG LIMITS

BORING WAS TAKEN WITH A 5 INCH DIAMETER STEEL TUBE PISTON TYPE SAMPLER.
FOR SOIL BORING LEGEND SEE PLATE A.
FOR LOCATION OF BORINGS SEE PLATE
FOR DETAILED TEST DATA SEE

NC-1U

38-40

EST OF B/L

AY 92

NO EL. 32.5

TEST DATA

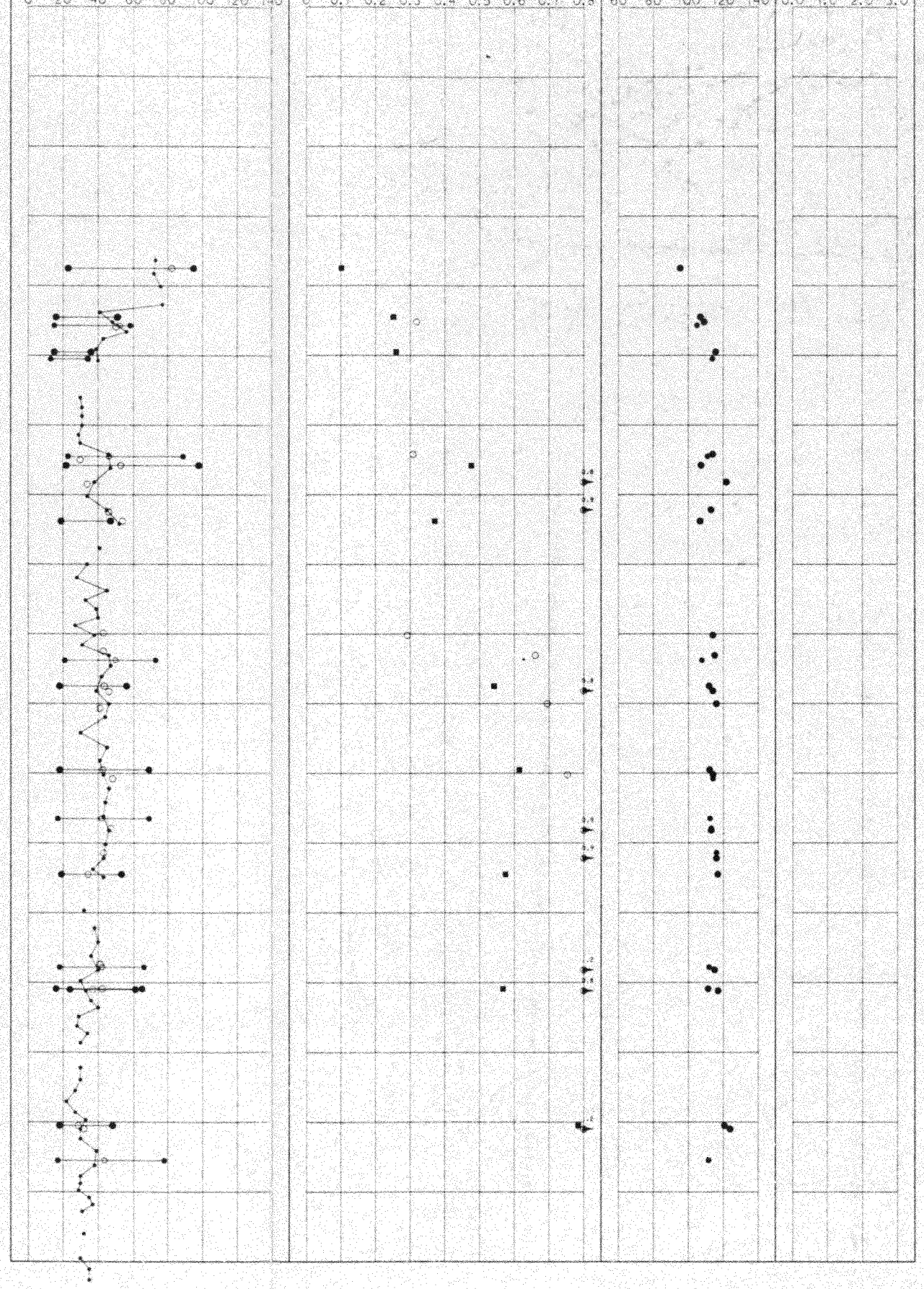

PLASTICITY CHART

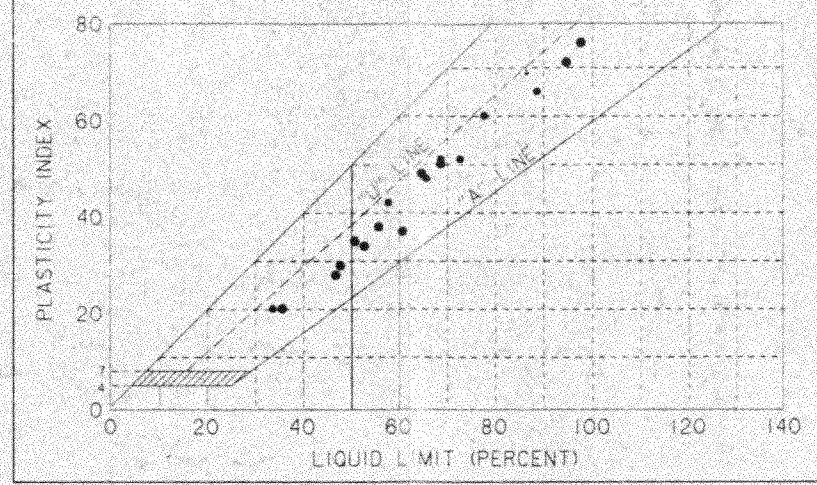

SHEAR STRENGTH DATA

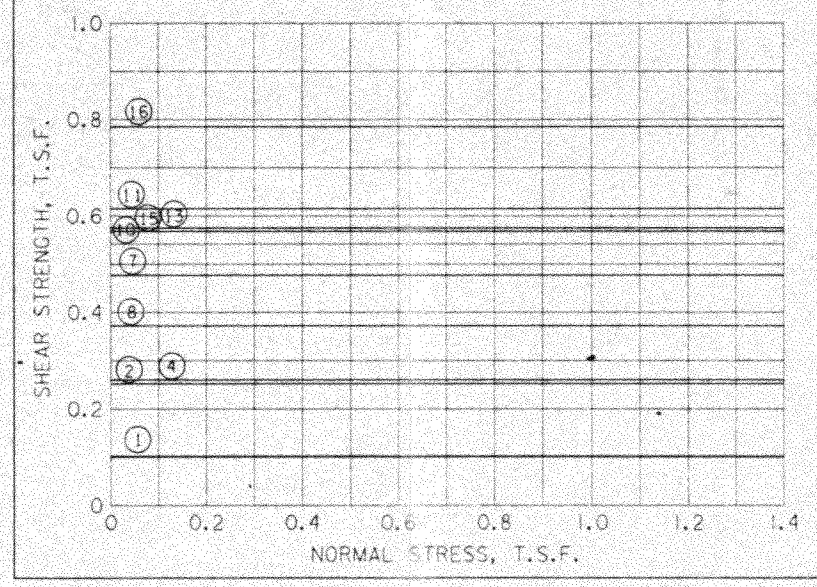

TABULAR TEST DATA

ENVELOPE NO.	ENVELOPE EL.	TYPE	STRENGTH Φ	STRENGTH C - TSF	CLASS
1	-47.5	Q	0.0	0.102	CH
2	-54.5	Q	0.0	0.252	CH
3	-55.7	C			CH
4	-59.5	Q	0.0	0.260	CL
5	-60.5	C			CL
6	-74.5	C			CH
7	-75.8	Q	0.0	0.477	CH
8	-83.8	Q	0.0	0.372	CH
9	-103.8	C			CH
10	-107.5	Q	0.0	0.542	CH
11	-119.5	Q	0.0	0.615	CH
12	-126.5	C			CH
13	-134.5	Q	0.0	0.575	CH
14	-147.8	C			CH
15	-150.9	Q	0.0	0.568	CH
16	-170.5	Q	0.0	0.785	CL
17	-175.5	C			CH

NOTES

- ○ - (UC) UNCONFINED COMPRESSION TEST
- ■ - (Q) UNCONSOLIDATED - UNDRAINED TRIAXIAL SHEAR TEST
- ▲ - (R) CONSOLIDATED - UNDRAINED TRIAXIAL SHEAR TEST
- ⊡ - (S) CONSOLIDATED - DRAINED DIRECT SHEAR TEST
- ω_P ω_N ω_L ATTERBERG LIMITS

BORING WAS TAKEN WITH A 5 INCH DIAMETER STEEL TUBE PISTON TYPE SAMPLER.
FOR SOIL BORING LEGEND SEE PLATE A.
FOR LOCATION OF BORINGS SEE PLATE
FOR DETAILED TEST DATA SEE

C•A•D

MISSISSIPPI RIVER - GULF OUTLET
NEW LOCK AND CONNECTING CHANNELS
(INDUSTRIAL CANAL LOCK REPLACEMENT)
FEASIBILITY STUDY

UNDISTURBED BORING LOG
BORING NC-1U

U.S. ARMY ENGINEER DISTRICT, NEW ORLEANS
CORPS OF ENGINEERS
NEW ORLEANS, LOUISIANA

DESIGNED BY: C.A.L.	PLOT SCALE: 10	PLOT DATE: JUN 93	CADD FILE: NC-1U	
DRAWN BY: K.J.T.			FILE NO.	H-2-40392
CHECKED BY: K.J.T.	DATE: JUN 93			

BOR. NC-1U

STA. 38+40

800 FT. WEST OF B/L

7 MAY 92

W. of O.D. GROUND EL. 32.5

ELEVATIONS IN FEET - N.G.V.D.

-20 -30 -40 -50 -60 -70 -80 -90 -100 -110 -120 -130 -140 -150 -160 -170 -180 -190

TEST DATA

WATER CONTENT
% WATER, DRY WEIGHT
0 20 40 60 80 100 120 140

SHEAR STRENGTH
TONS / SQ.FT.
0 0.1 0.2 0.3 0.4 0.5 0.6 0.7 0.8

WET DENSITY
POUNDS / CU.FT.
60 80 100 120 140

NORMAL STRESS
TONS / SQ.FT.
0.0 1.0 2.0 3.0

PLASTICITY CHART

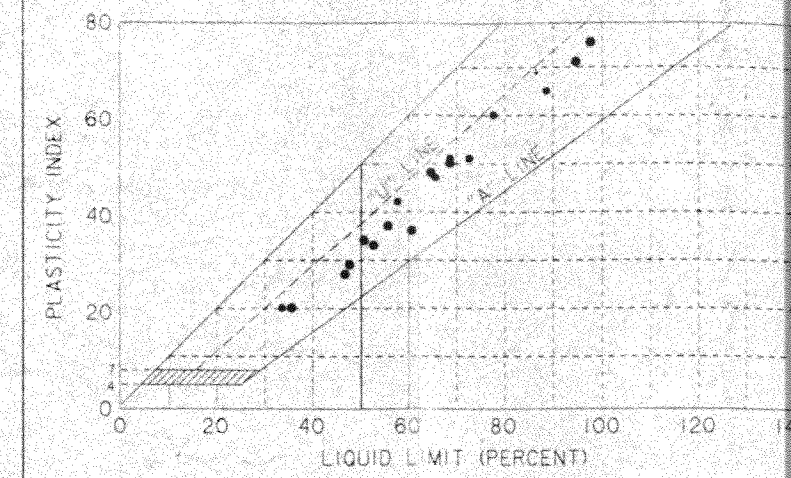

SHEAR STRENGTH DATA

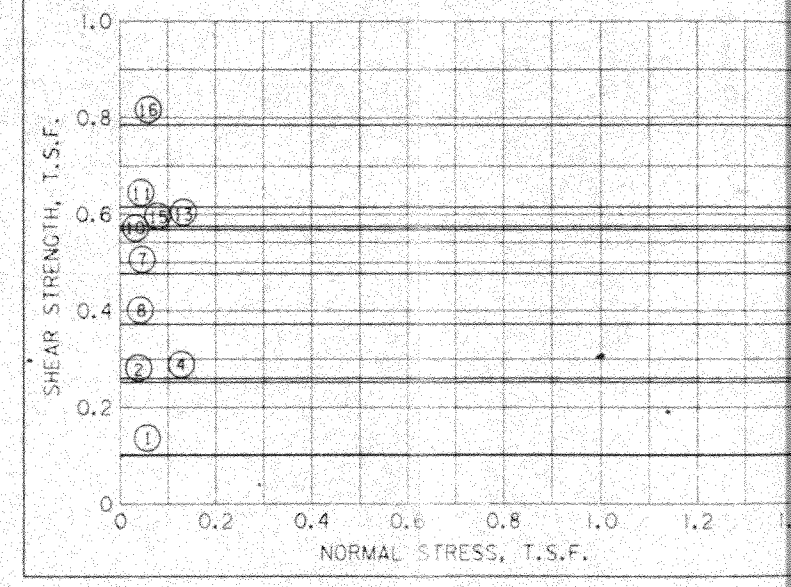

NOTES

- ○ - (UC) UNCONFINED COMPRESSION TEST
- ■ - (Q) UNCONSOLIDATED - UNDRAINED TRIAXIAL SHEAR TEST
- ▲ - (R) CONSOLIDATED - UNDRAINED TRIAXIAL SHEAR TEST
- ⊡ - (S) CONSOLIDATED - DRAINED DIRECT SHEAR TEST
- ω_P ω_N ω_L ATTERBERG LIMITS

BORING WAS TAKEN WITH A 5 INCH DIAMETER STEEL TUBE PISTON TYPE SAMPLER.

FOR SOIL BORING LEGEND SEE PLATE A.

FOR LOCATION OF BORINGS SEE PLATE

FOR DETAILED TEST DATA SEE

, NC-1U
, 38+40
WEST OF B/L

MAY 92

TEST DATA

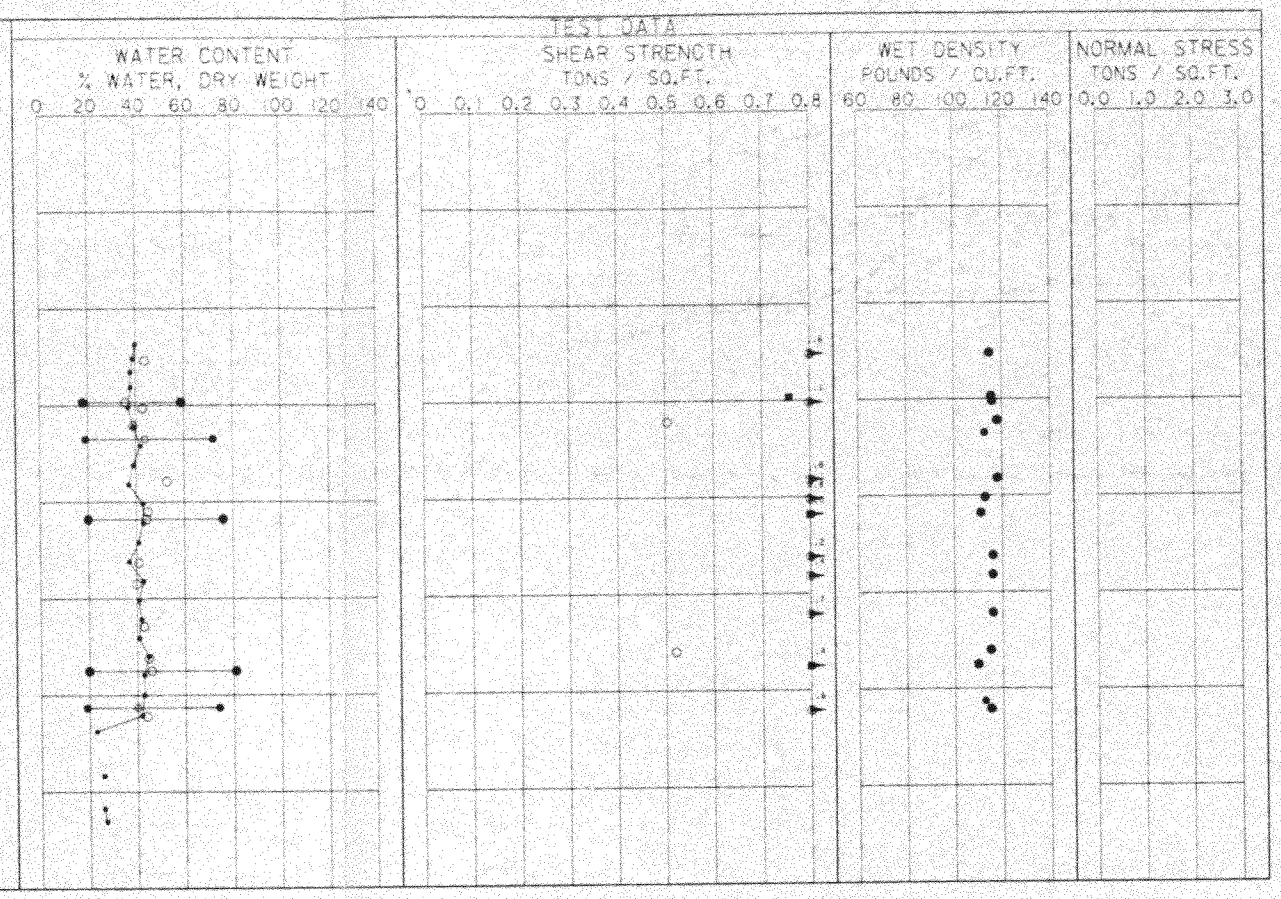

PLASTICITY CHART

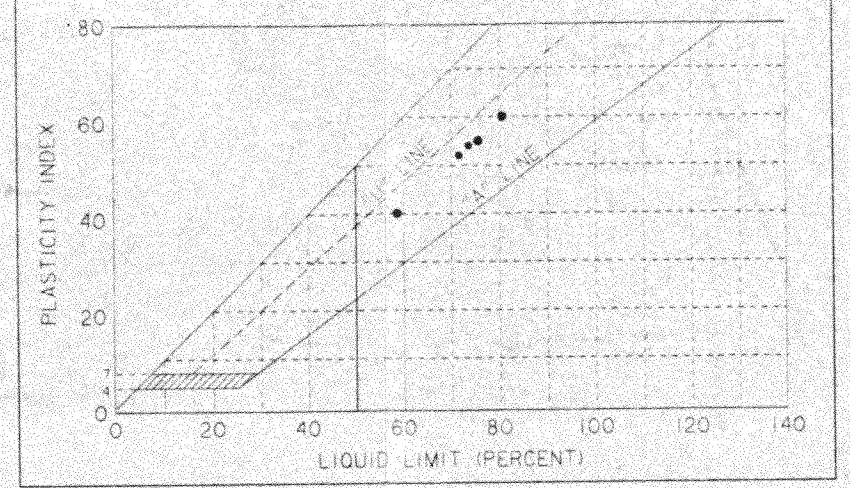

TABULAR TEST DATA

ENVELOPE NO.	EL.	TYPE	STRENGTH Φ	STRENGTH C, TSF	CLASS
18	-149.7	Q	0.0	0.758	CH
19	-203.6	Q			CH
20	-211.8	Q	0.0	0.805	CH
21	-221.8	Q	0.0	1.413	CH
22	-231.1	Q			CH

SHEAR STRENGTH DATA

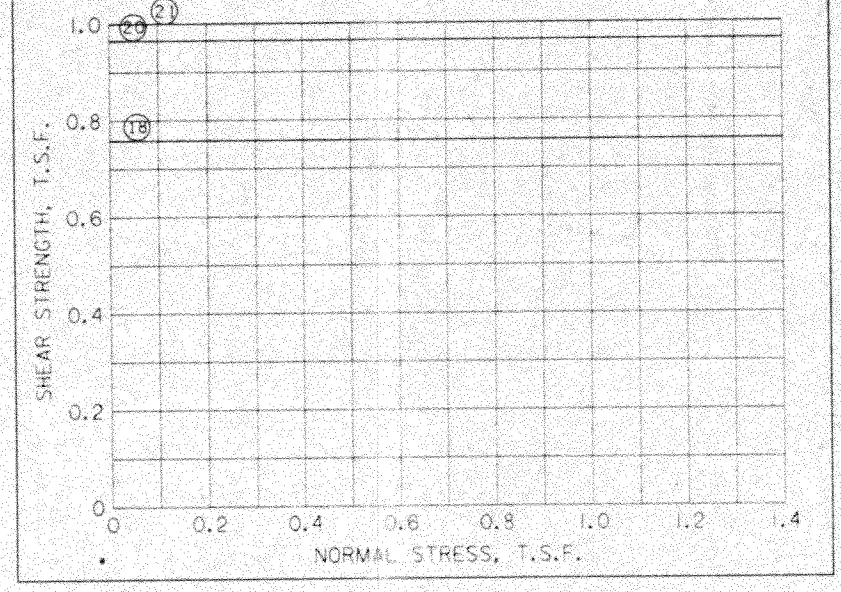

NOTES

- ○ - (UC) UNCONFINED COMPRESSION TEST
- ■ - (Q) UNCONSOLIDATED - UNDRAINED TRIAXIAL SHEAR TEST
- ▲ - (R) CONSOLIDATED - UNDRAINED TRIAXIAL SHEAR TEST
- ⊟ - (S) CONSOLIDATED - DRAINED DIRECT SHEAR TEST
- ω_P ω_N ω_L ATTERBERG LIMITS

BORING WAS TAKEN WITH A 5 INCH DIAMETER STEEL TUBE PISTON TYPE SAMPLER.
FOR SOIL BORING LEGEND SEE PLATE A.
FOR LOCATION OF BORINGS SEE PLATE
FOR DETAILED TEST DATA SEE

C·A·D

MISSISSIPPI RIVER - GULF OUTLET
NEW LOCK AND CONNECTING CHANNELS
(INDUSTRIAL CANAL LOCK REPLACEMENT)
FEASIBILITY STUDY

UNDISTURBED BORING LOG
BORING NC-1U CONT'D

U.S. ARMY ENGINEER DISTRICT, NEW ORLEANS
CORPS OF ENGINEERS
NEW ORLEANS, LOUISIANA

DESIGNED BY: C.A.L.	PLOT SCALE: 10	PLOT DATE: JUN 93	CADD FILE: NC-1U	
DRAWN BY: K.J.T.			FILE NO. H-2-40392	
CHECKED BY: K.J.T.	DATE: JUN 93			

PLATE B-82

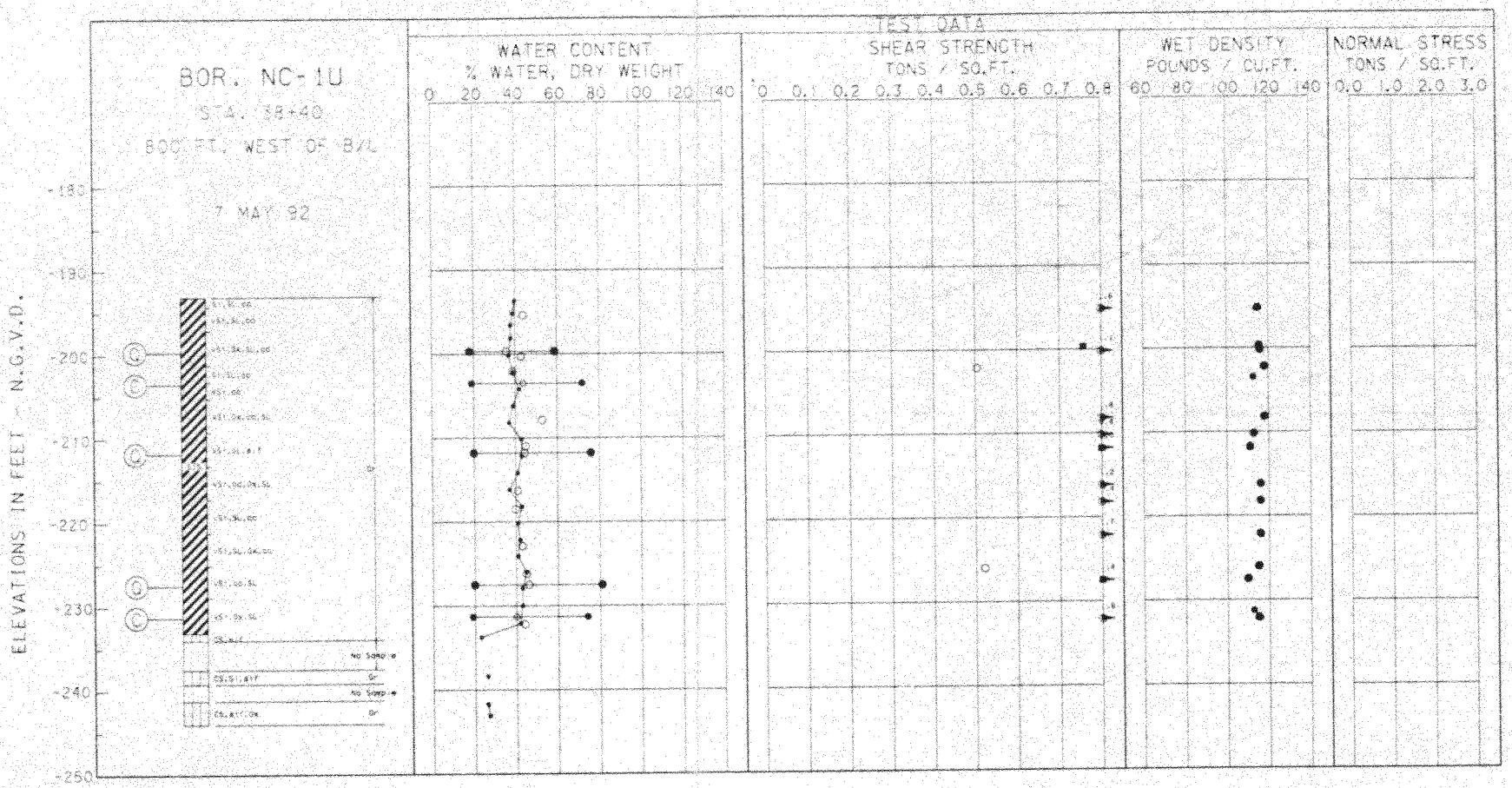

PLASTICITY CHART

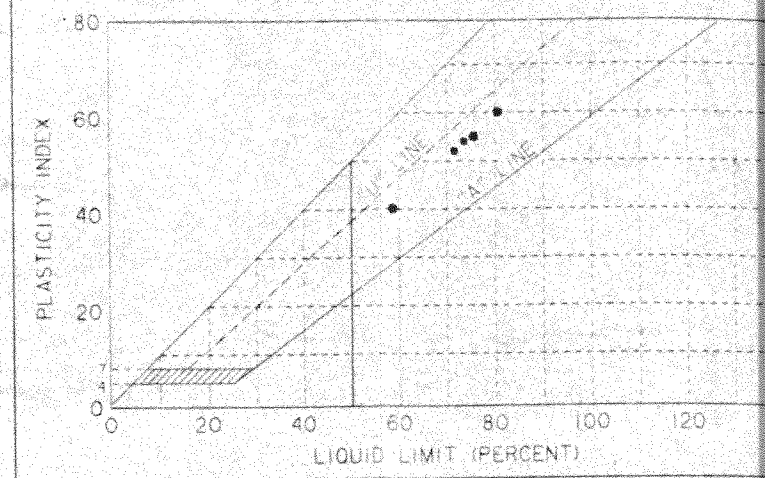

SHEAR STRENGTH DATA

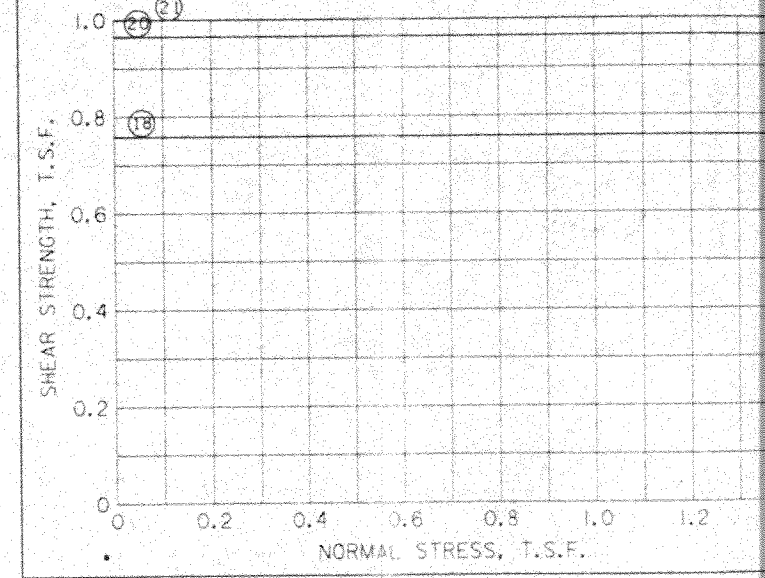

NOTES

- o - (UC) UNCONFINED COMPRESSION TEST
- ■ - (Q) UNCONSOLIDATED - UNDRAINED TRIAXIAL SHEAR TEST
- ▲ - (R) CONSOLIDATED - UNDRAINED TRIAXIAL SHEAR TEST
- ⊡ - (S) CONSOLIDATED - DRAINED DIRECT SHEAR TEST
- ω_P ω_N ω_L ATTERBERG LIMITS

BORING WAS TAKEN WITH A 5 INCH DIAMETER STEEL TUBE PISTON TYPE SAMPLER.
FOR SOIL BORING LEGEND SEE PLATE A.
FOR LOCATION OF BORINGS SEE PLATE
FOR DETAILED TEST DATA SEE

. NC-2U
A. 52+30
WEST OF B/L

MAY 92

ROUND EL. -32.5

TEST DATA

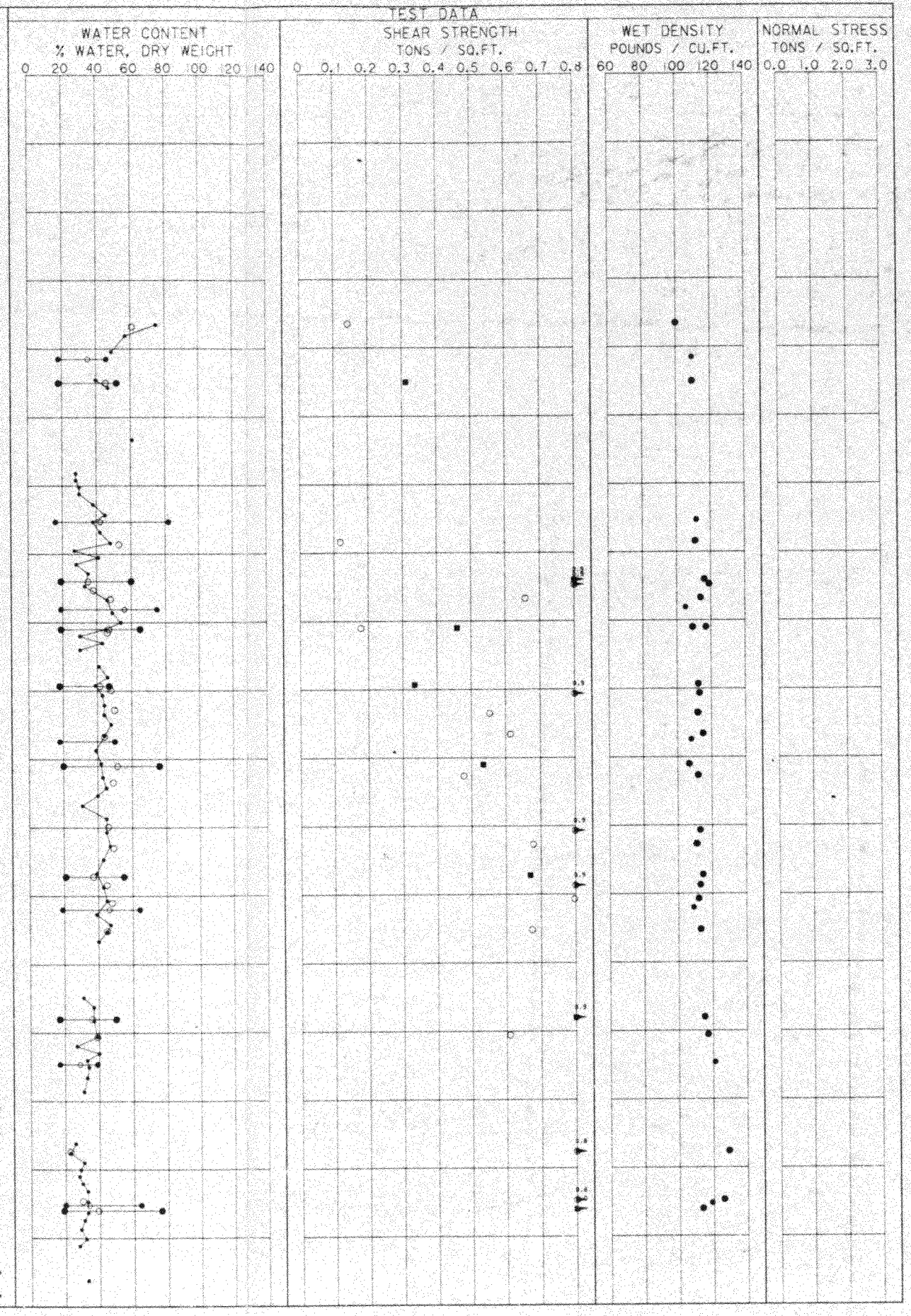

PLASTICITY CHART

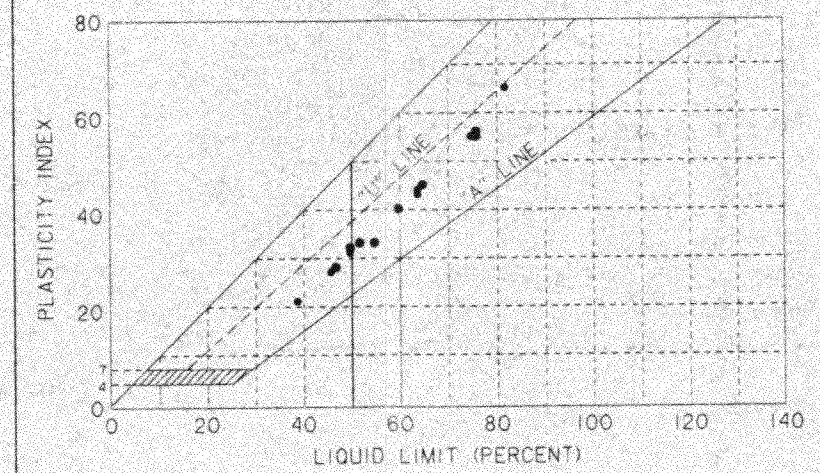

TABULAR TEST DATA

ENVELOPE NO.	ENVELOPE EL.	TYPE	STRENGTH Φ	STRENGTH C - TSF	CLASS
1	-51.5	C			CH
2	-55.0	Q	0.0	0.313	CL
3	-75.3	C			CH
4	-84.0	Q	0.0	0.900	CH
5	-88.1	C			CH
6	-91.0	Q	0.0	0.460	CH
7	-99.3	Q	0.0	0.335	CH
8	-107.4	C			CH
9	-111.0	Q	0.0	0.535	CH
10	-127.2	Q	0.0	0.670	CH
11	-132.0	C			CH
12	-148.0	Q	0.0	0.862	CH
13	-154.6	C			CL
14	-175.2	C			CH
15	-176.0	Q	0.0	1.043	CH

SHEAR STRENGTH DATA

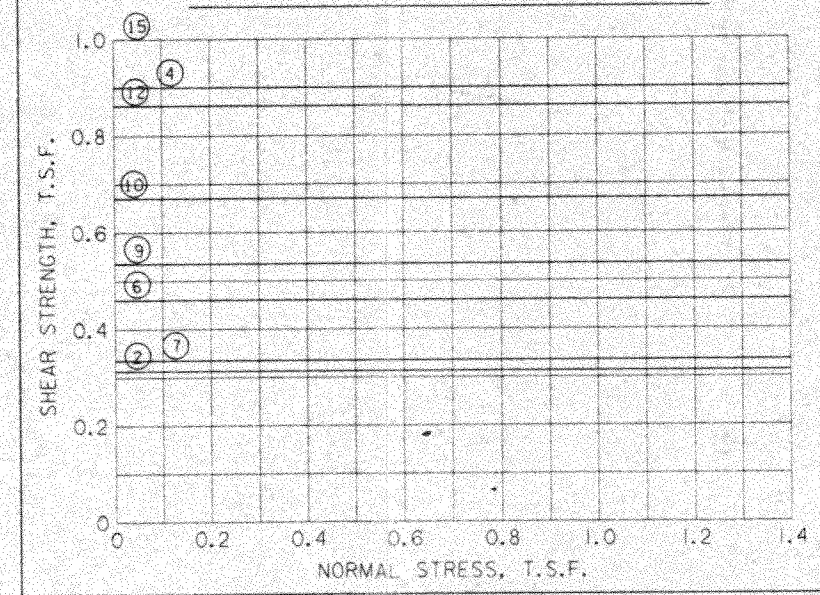

NOTES

- ○ - (UC) UNCONFINED COMPRESSION TEST
- ■ - (Q) UNCONSOLIDATED - UNDRAINED TRIAXIAL SHEAR TEST
- ▲ - (R) CONSOLIDATED - UNDRAINED TRIAXIAL SHEAR TEST
- ⊡ - (S) CONSOLIDATED - DRAINED DIRECT SHEAR TEST

ω_P ω_N ω_L ATTERBERG LIMITS

BORING WAS TAKEN WITH A 5 INCH DIAMETER STEEL TUBE PISTON TYPE SAMPLER.
FOR SOIL BORING LEGEND SEE PLATE A.
FOR LOCATION OF BORINGS SEE PLATE
FOR DETAILED TEST DATA SEE

C·A·D

MISSISSIPPI RIVER - GULF OUTLET
NEW LOCK AND CONNECTING CHANNELS
(INDUSTRIAL CANAL LOCK REPLACEMENT)
FEASIBILITY STUDY

UNDISTURBED BORING LOG
BORING NC-2U

U.S. ARMY ENGINEER DISTRICT, NEW ORLEANS
CORPS OF ENGINEERS
NEW ORLEANS, LOUISIANA

DESIGNED BY: K.J.T.	PLOT SCALE: 10	PLOT DATE: JUN 93	CADD FILE: NC-2U	
DRAWN BY: K.J.T.			FILE NO. H-2-40392	
CHECKED BY: K.J.T.	DATE: JUN 93			

PLATE B-83

BOR. NC-2U

STA. 52+30

800 FT. WEST OF B/L

9 MAY 92

W or D.10 GROUND EL. -32.5

ELEVATIONS IN FEET - N.G.V.D.

TEST DATA

WATER CONTENT
% WATER, DRY WEIGHT
0 20 40 60 80 100 120 140

SHEAR STRENGTH
TONS / SQ.FT.
0 0.1 0.2 0.3 0.4 0.5 0.6 0.7 0.8

WET DENSITY
POUNDS / CU.FT.
60 80 100 120 140

NORMAL STRESS
TONS / SQ.FT.
0.0 1.0 2.0 3.0

PLASTICITY CHART

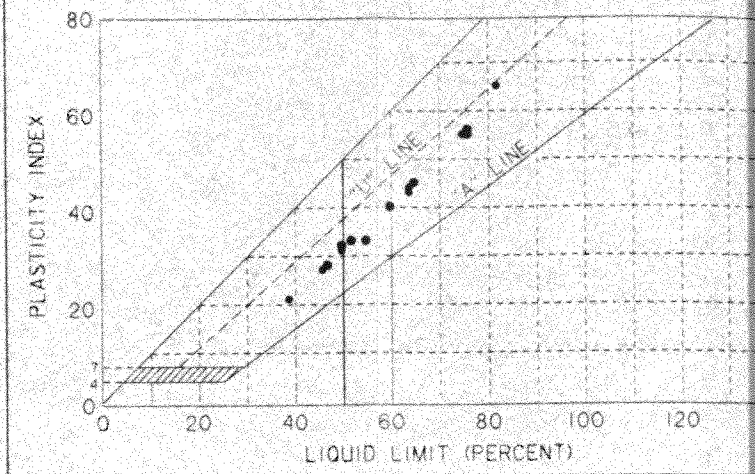

SHEAR STRENGTH DATA

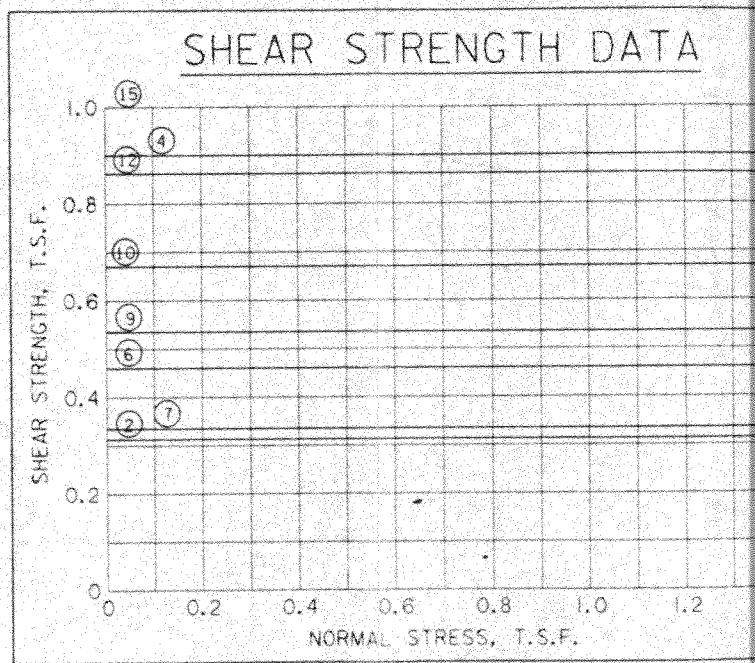

NOTES

- ○ - (UC) UNCONFINED COMPRESSION TEST
- ■ - (Q) UNCONSOLIDATED - UNDRAINED TRIAXIAL SHEAR TEST
- ▲ - (R) CONSOLIDATED - UNDRAINED TRIAXIAL SHEAR TEST
- ⊡ - (S) CONSOLIDATED - DRAINED DIRECT SHEAR TEST
- ω_P ω_N ω_L ATTERBERG LIMITS

BORING WAS TAKEN WITH A 5 INCH DIAMETER STEEL TUBE PISTON TYPE SAMPLER.

FOR SOIL BORING LEGEND SEE PLATE A.

FOR LOCATION OF BORINGS SEE PLATE

FOR DETAILED TEST DATA SEE

NC-2U
52-30
EST OF B/L
AY 92

TEST DATA

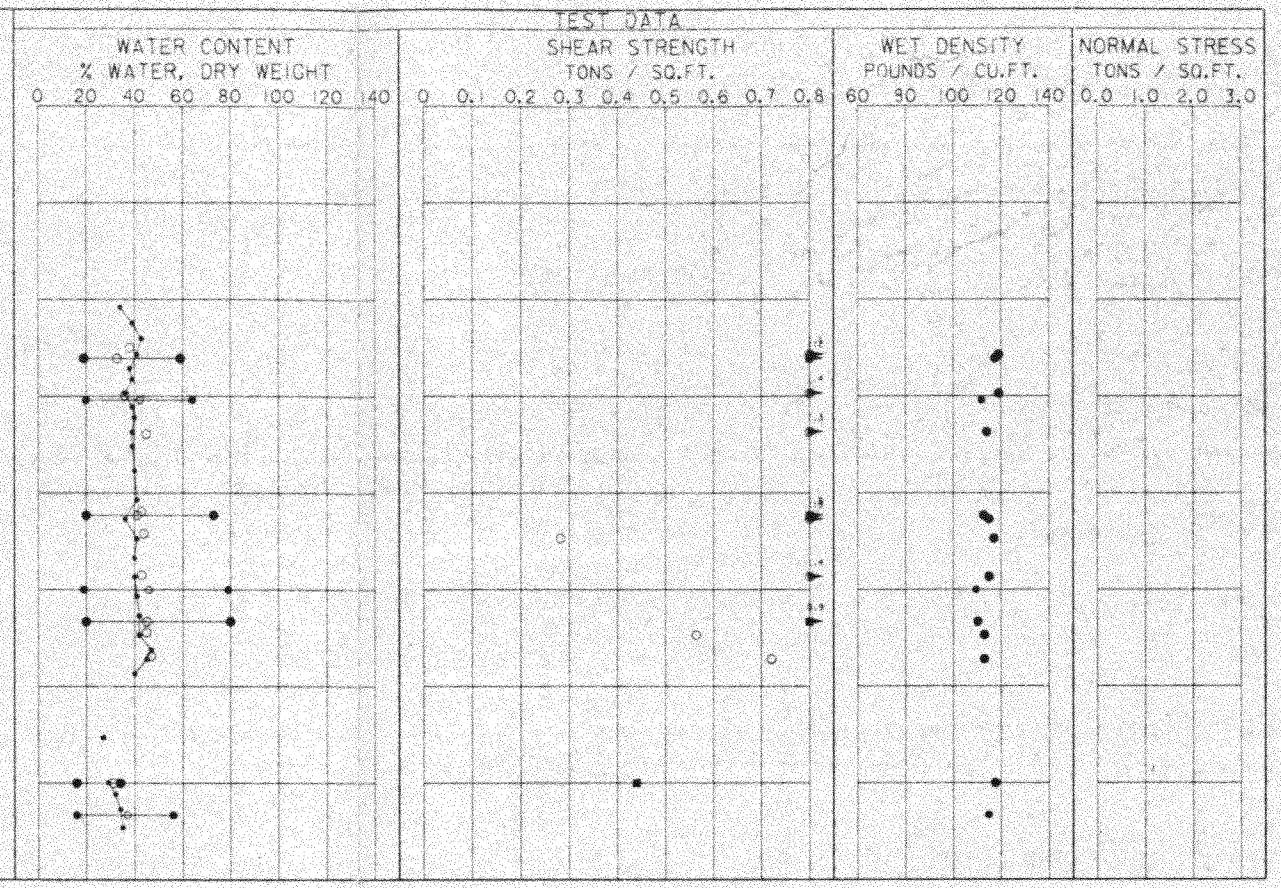

PLASTICITY CHART

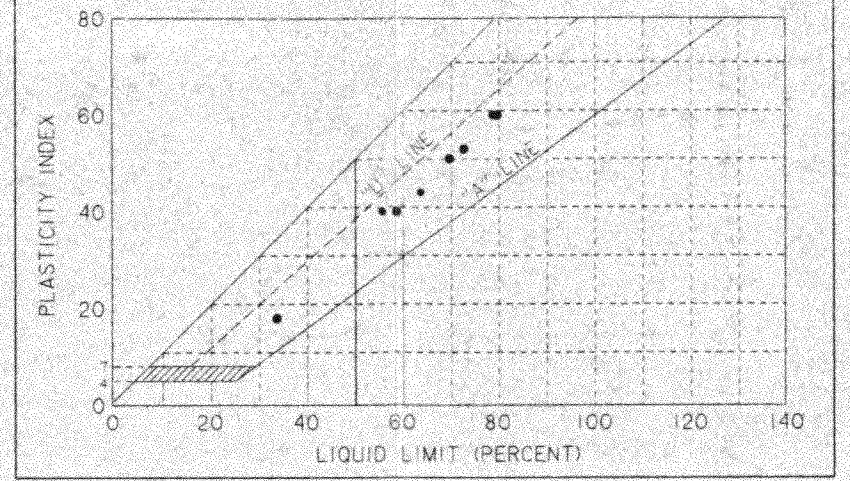

SHEAR STRENGTH DATA

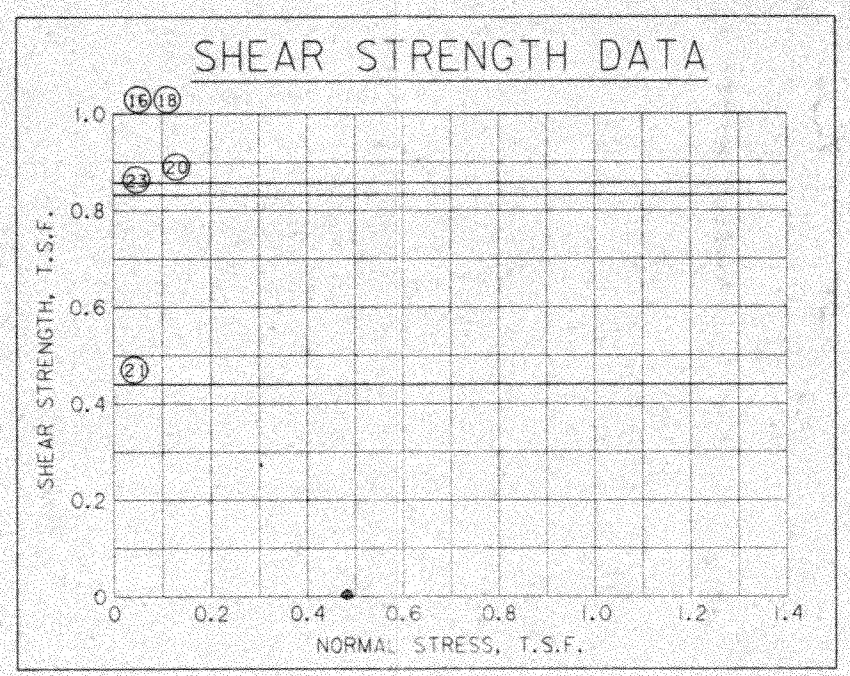

TABULAR TEST DATA

ENVELOPE NO.	ENVELOPE EL.	TYPE	STRENGTH Φ	STRENGTH C TSF	CLASS
16	-196.1	Q	0.0	1.175	CH
17	-200.4	C			CH
18	-212.3	Q	0.0	1.557	CH
19	-220.0	C			CH
20	-223.3	Q	0.0	0.857	CH
21	-240.0	Q	0.0	0.440	CL
22	-243.3	C			CH
23	-72.9	Q	0.0	0.832	CH

NOTES

- ○ - (UC) UNCONFINED COMPRESSION TEST
- ■ - (Q) UNCONSOLIDATED - UNDRAINED TRIAXIAL SHEAR TEST
- ▲ - (R) CONSOLIDATED - UNDRAINED TRIAXIAL SHEAR TEST
- ⊡ - (S) CONSOLIDATED - DRAINED DIRECT SHEAR TEST
- ω_P ——○—— ω_L ATTERBERG LIMITS

BORING WAS TAKEN WITH A 5 INCH DIAMETER STEEL TUBE PISTON TYPE SAMPLER.
FOR SOIL BORING LEGEND SEE PLATE A.
FOR LOCATION OF BORINGS SEE PLATE
FOR DETAILED TEST DATA SEE

C·A·D

MISSISSIPPI RIVER - GULF OUTLET
NEW LOCK AND CONNECTING CHANNELS
(INDUSTRIAL CANAL LOCK REPLACEMENT)
FEASIBILITY STUDY

UNDISTURBED BORING LOG
BORING NC-2U CONT'D

U.S. ARMY ENGINEER DISTRICT, NEW ORLEANS
CORPS OF ENGINEERS
NEW ORLEANS, LOUISIANA

DESIGNED BY:	K.J.T.	PLOT SCALE:	PLOT DATE:	CADD FILE:	NC-2U
DRAWN BY:	K.J.T.	10	JUN 93	FILE NO.	H-2-40392
CHECKED BY:	K.J.T.	DATE:	JUN 93		

BOR. NC-2U

STA. 52-30

800 FT. WEST OF B/L

9 MAY 92

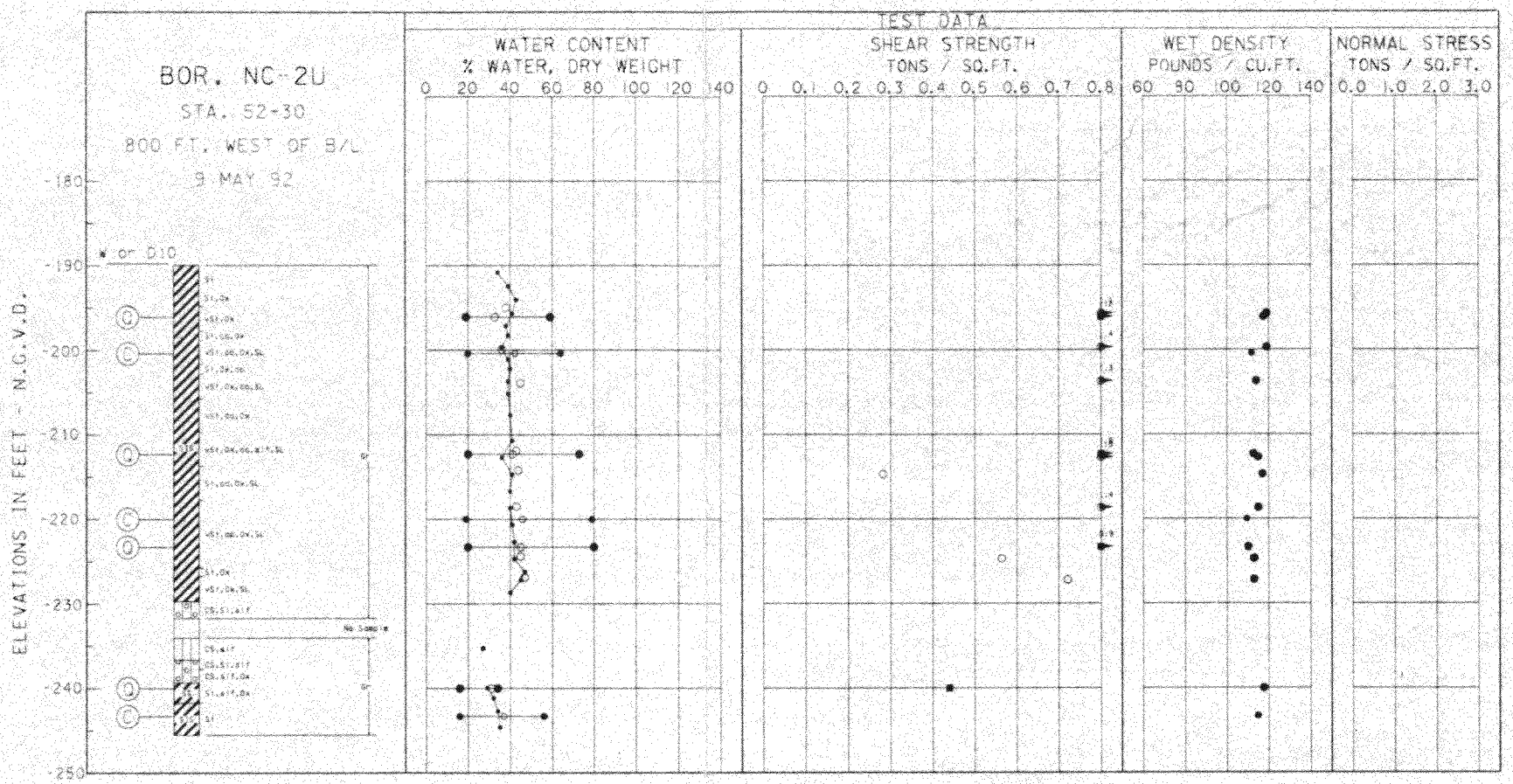

PLASTICITY CHART

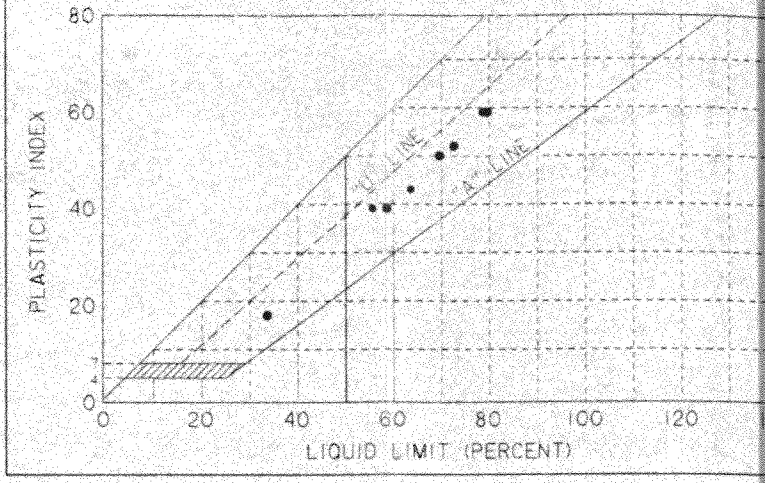

SHEAR STRENGTH DATA

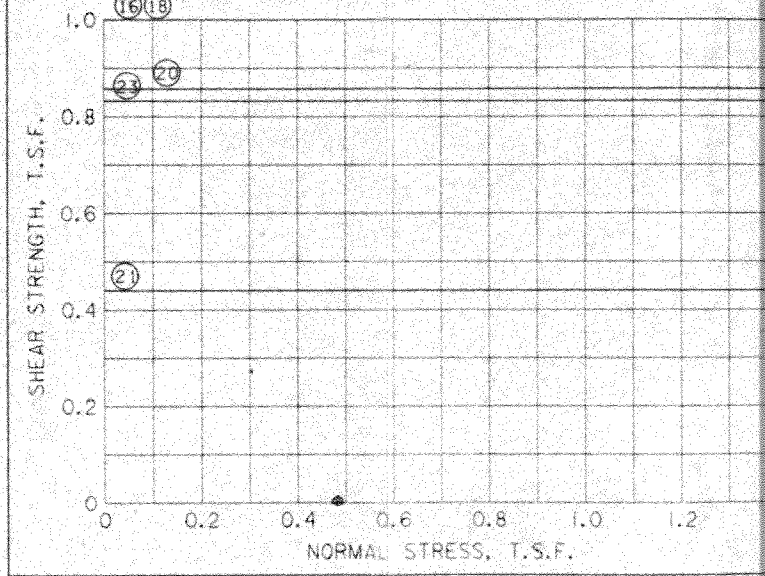

NOTES

- ○ - (UC) UNCONFINED COMPRESSION TEST
- ■ - (Q) UNCONSOLIDATED - UNDRAINED TRIAXIAL SHEAR TEST
- ▲ - (R) CONSOLIDATED - UNDRAINED TRIAXIAL SHEAR TEST
- ⊡ - (S) CONSOLIDATED - DRAINED DIRECT SHEAR TEST
- ω_P ω_N ω_L ATTERBERG LIMITS

BORING WAS TAKEN WITH A 5 INCH DIAMETER STEEL TUBE PISTON TYPE SAMPLER.

FOR SOIL BORING LEGEND SEE PLATE A.

FOR LOCATION OF BORINGS SEE PLATE

FOR DETAILED TEST DATA SEE

R, NC-3U

TA. 45+25

. WEST OF B/L

) MAY 92

GROUND E. -31.0

No Sample

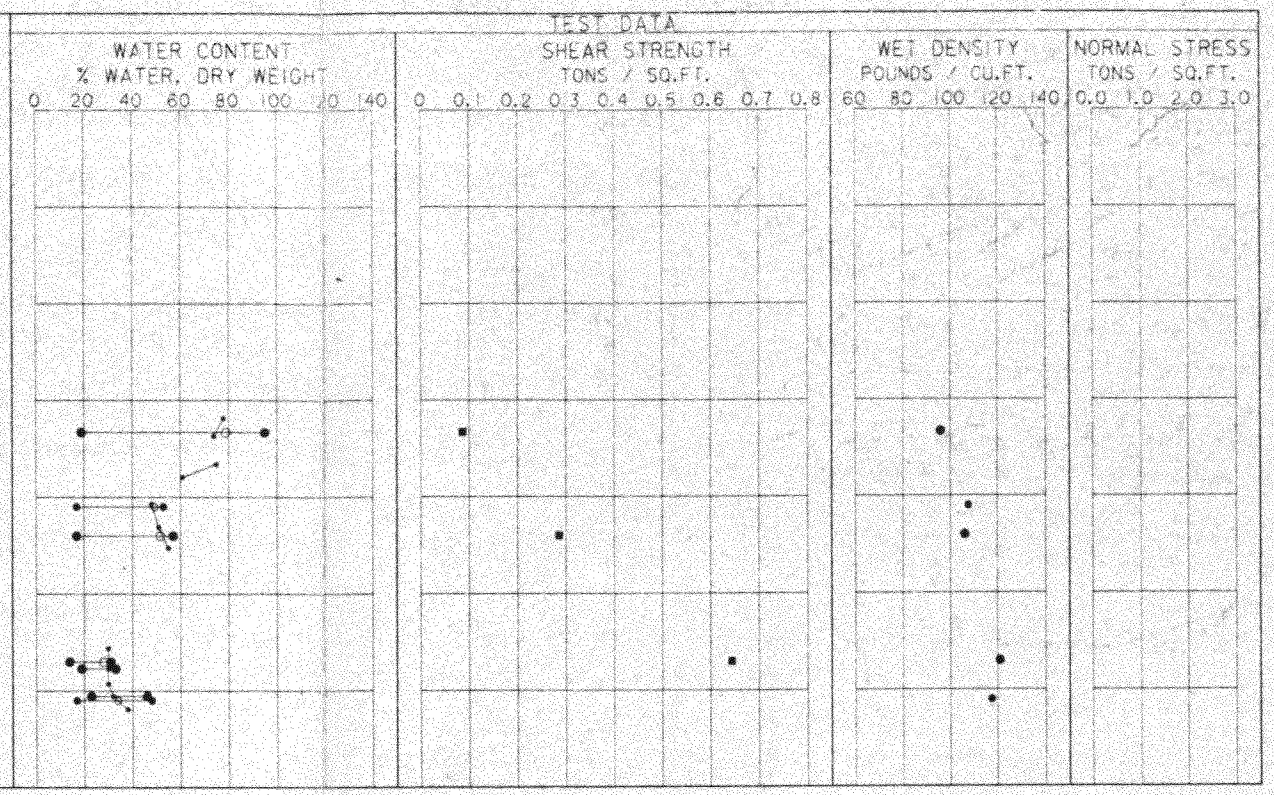

PLASTICITY CHART

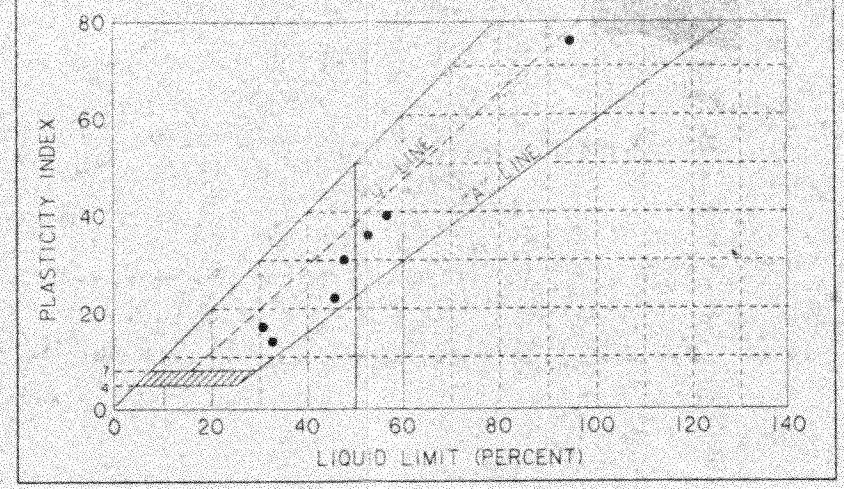

TABULAR TEST DATA

ENVELOPE NO.	ENVELOPE EL.	TYPE	STRENGTH Φ	STRENGTH C - TSF	CLASS
1	-43.3	Q	0.0	0.087	CH
2	-51.0	C			CH
3	-54.0	Q	0.0	0.287	CH
4	-67.0	Q	0.0	0.645	CL
5	-71.0	C			CL

SHEAR STRENGTH DATA

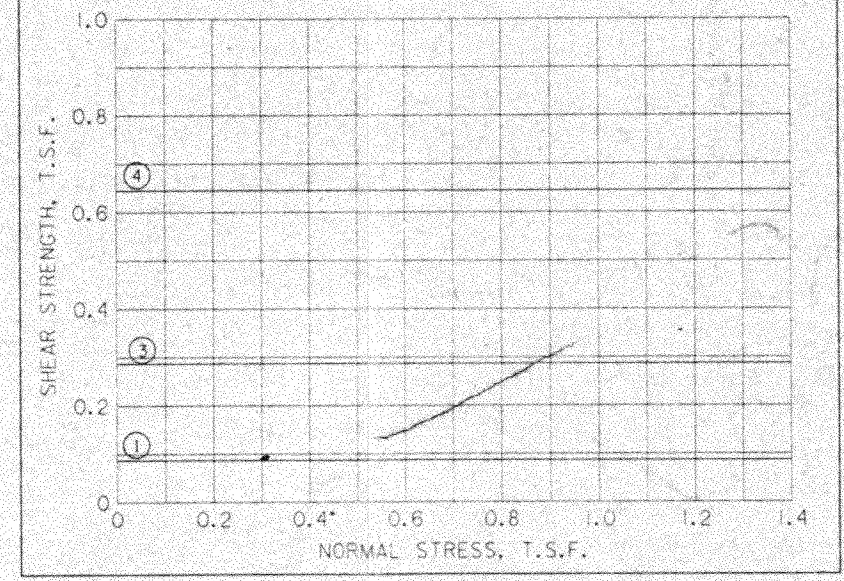

NOTES

- ○ - (UC) UNCONFINED COMPRESSION TEST
- ■ - (Q) UNCONSOLIDATED - UNDRAINED TRIAXIAL SHEAR TEST
- ▲ - (R) CONSOLIDATED - UNDRAINED TRIAXIAL SHEAR TEST
- ⊡ - (S) CONSOLIDATED - DRAINED DIRECT SHEAR TEST
- ω_P — ω_N — ω_L ATTERBERG LIMITS

BORING WAS TAKEN WITH A 5 INCH DIAMETER STEEL TUBE PISTON TYPE SAMPLER.
FOR SOIL BORING LEGEND SEE PLATE A.
FOR LOCATION OF BORINGS SEE PLATE
FOR DETAILED TEST DATA SEE

C•A•D.

MISSISSIPPI RIVER - GULF OUTLET
NEW LOCK AND CONNECTING CHANNELS
(INDUSTRIAL CANAL LOCK REPLACEMENT)
FEASIBILITY STUDY

UNDISTURBED BORING LOG
BORING NC-3U

U.S. ARMY ENGINEER DISTRICT, NEW ORLEANS
CORPS OF ENGINEERS
NEW ORLEANS, LOUISIANA

DESIGNED BY: K.J.T.	PLOT SCALE: 10	PLOT DATE: JUN 93	CADD FILE: NC-3U
DRAWN BY: K.J.T.			FILE NO. H-2-40392
CHECKED BY: K.J.T.	DATE: JUN 93		

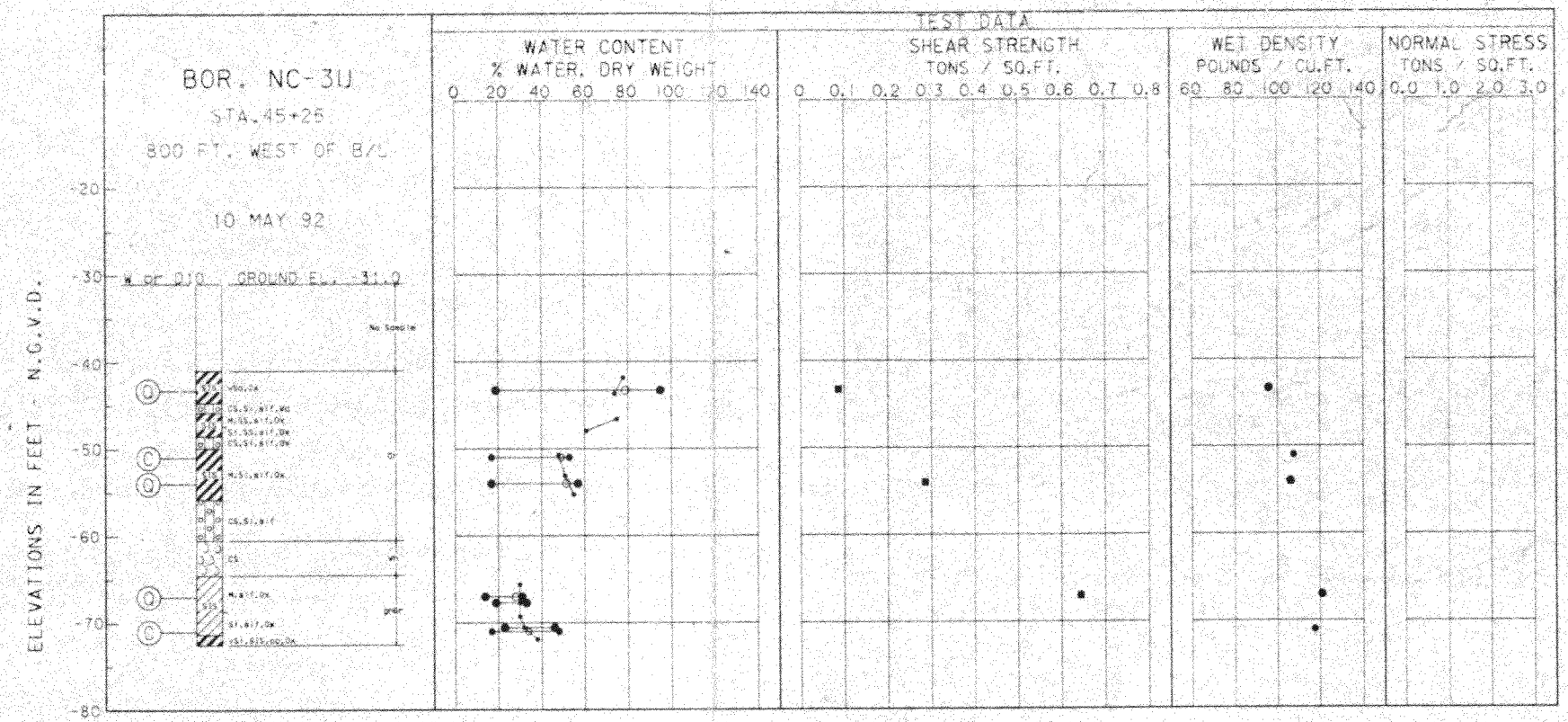

PLASTICITY CHART

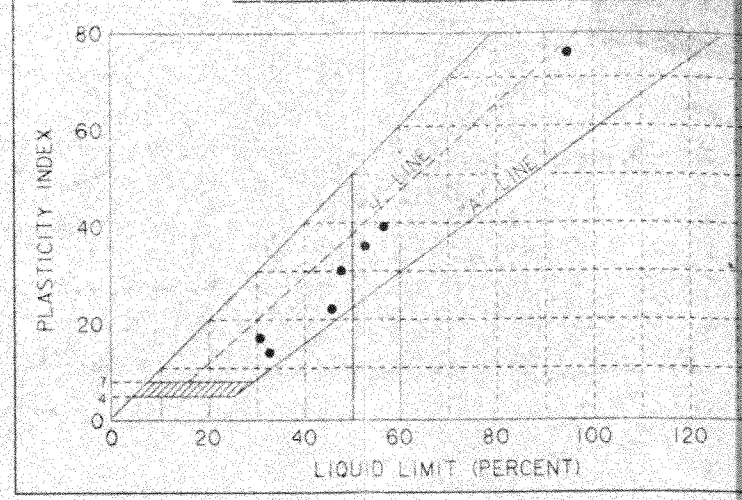

SHEAR STRENGTH DATA

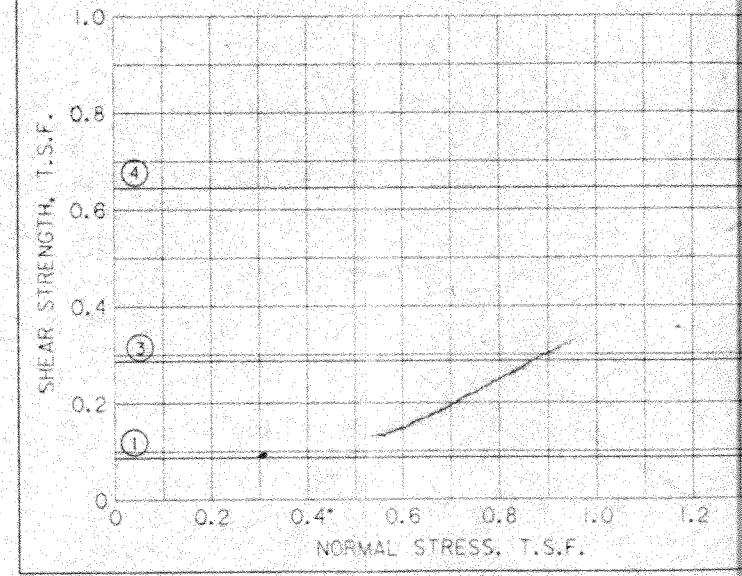

NOTES

- ○ - (UC) UNCONFINED COMPRESSION TEST
- ■ - (Q) UNCONSOLIDATED - UNDRAINED TRIAXIAL SHEAR TEST
- ▲ - (R) CONSOLIDATED - UNDRAINED TRIAXIAL SHEAR TEST
- ⊡ - (S) CONSOLIDATED - DRAINED DIRECT SHEAR TEST
- ω_P —— ω_N —— ω_L ATTERBERG LIMITS

BORING WAS TAKEN WITH A 5 INCH DIAMETER STEEL TUBE PISTON TYPE SAMPLER.
FOR SOIL BORING LEGEND SEE PLATE A.
FOR LOCATION OF BORINGS SEE PLATE
FOR DETAILED TEST DATA SEE

TEST DATA

SHEAR STRENGTH — TONS/SQ FT

WET DENSITY
POUNDS/CU FT

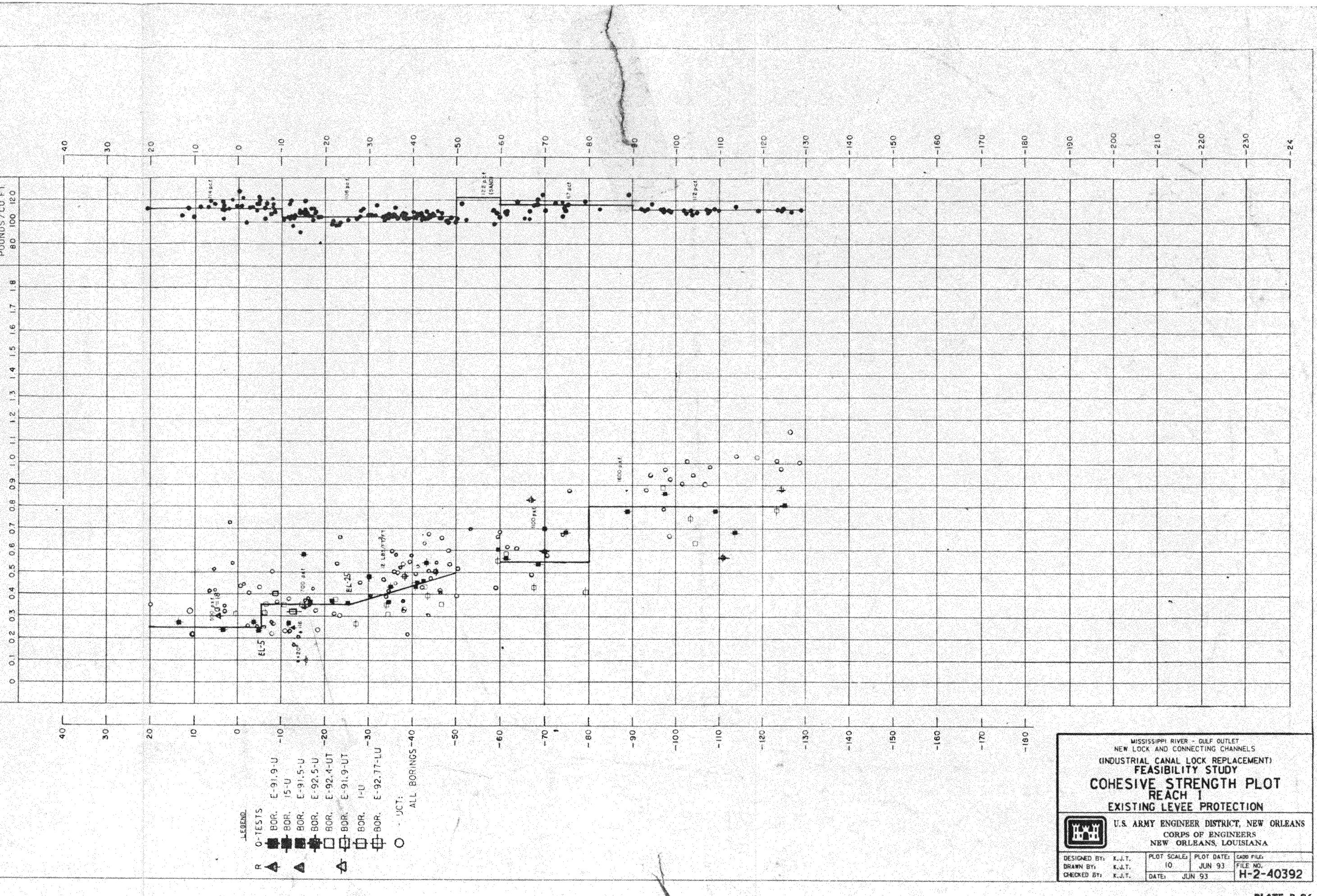

MISSISSIPPI RIVER - GULF OUTLET
NEW LOCK AND CONNECTING CHANNELS
(INDUSTRIAL CANAL LOCK REPLACEMENT)
FEASIBILITY STUDY

COHESIVE STRENGTH PLOT
REACH 1
EXISTING LEVEE PROTECTION

U.S. ARMY ENGINEER DISTRICT, NEW ORLEANS
CORPS OF ENGINEERS
NEW ORLEANS, LOUISIANA

DESIGNED BY: K.J.T.	PLOT SCALE: 10	PLOT DATE: JUN 93	CADD FILE:	
DRAWN BY: K.J.T.			FILE NO.	H-2-40392
CHECKED BY: K.J.T.	DATE: JUN 93			

PLATE B-86

TEST DATA

SHEAR STRENGTH — TONS/SQ.FT.

0 0.1 0.2 0.3 0.4 0.5 0.6 0.7 0.8 0.9 1.0 1.1 1.2 1.3 1.4 1.5 1.6 1.7 1.8

WET DENSITY
POUNDS/CU.FT.
80 100 120

LEGEND

R O-TESTS

- BOR. E-91.9-U
- BOR. 15-U
- BOR. E-91.5-U
- BOR. E-92.5-U
- BOR. E-92.4-UT
- BOR. E-91.9-UT
- BOR. 1-U
- BOR. E-92.77-LU
- ○ - UCT: ALL BORINGS

500 p.s.f. ϕ=18°

+20 -16

700 p.s.f.

EL-5

EL-25

12 LBS/FT²/FT

1100 p.s.f.

1600 p.s.f.

114 p.c.f.

106 p.c.f.

122 p.c.f. (SAND)

117 p.c.f.

112 p.c.f.

40 30 20 10 0 -10 -20 -30 -40 -50 -60 -70 -80 -90 -100 -110 -120 -130 -140 -150

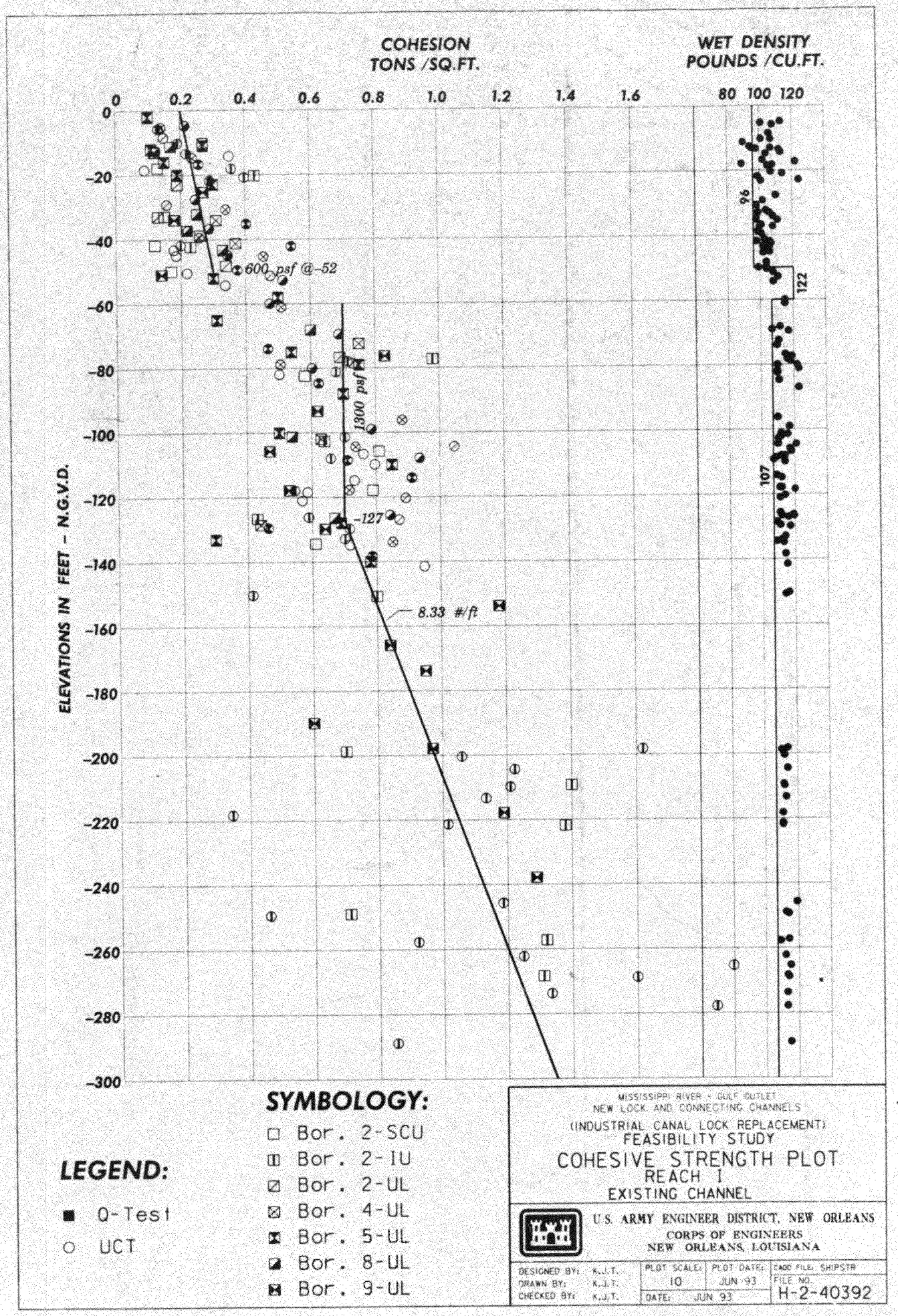
COHESION
TONS /SQ.FT.
WET DENSITY
POUNDS /CU.FT.
0
0.2
0.4
0.6
0.8
1.0
1.2
1.4
1.6
80
100
120
-20
-40
-60
-80
-100
-120
-140
-160
-180
-200
-220
-240
-260
-280
-300
ELEVATIONS IN FEET - N.G.V.D.
600 psf @-52
1300 psf
-127
8.33 #/ft
96
122
107
SYMBOLOGY:
Bor. 2-SCU
Bor. 2-IU
Bor. 2-UL
Bor. 4-UL
Bor. 5-UL
Bor. 8-UL
Bor. 9-UL
LEGEND:
Q-Test
UCT
MISSISSIPPI RIVER - GULF OUTLET
NEW LOCK AND CONNECTING CHANNELS
(INDUSTRIAL CANAL LOCK REPLACEMENT)
FEASIBILITY STUDY
COHESIVE STRENGTH PLOT
REACH 1
EXISTING CHANNEL
U.S. ARMY ENGINEER DISTRICT, NEW ORLEANS
CORPS OF ENGINEERS
NEW ORLEANS, LOUISIANA
DESIGNED BY: K.J.T.
DRAWN BY: K.J.T.
CHECKED BY: K.J.T.
PLOT SCALE: 10
PLOT DATE: JUN 93
DATE: JUN 93
CADD FILE: SHIPSTR
FILE NO.
H-2-40392

PLATE B-87

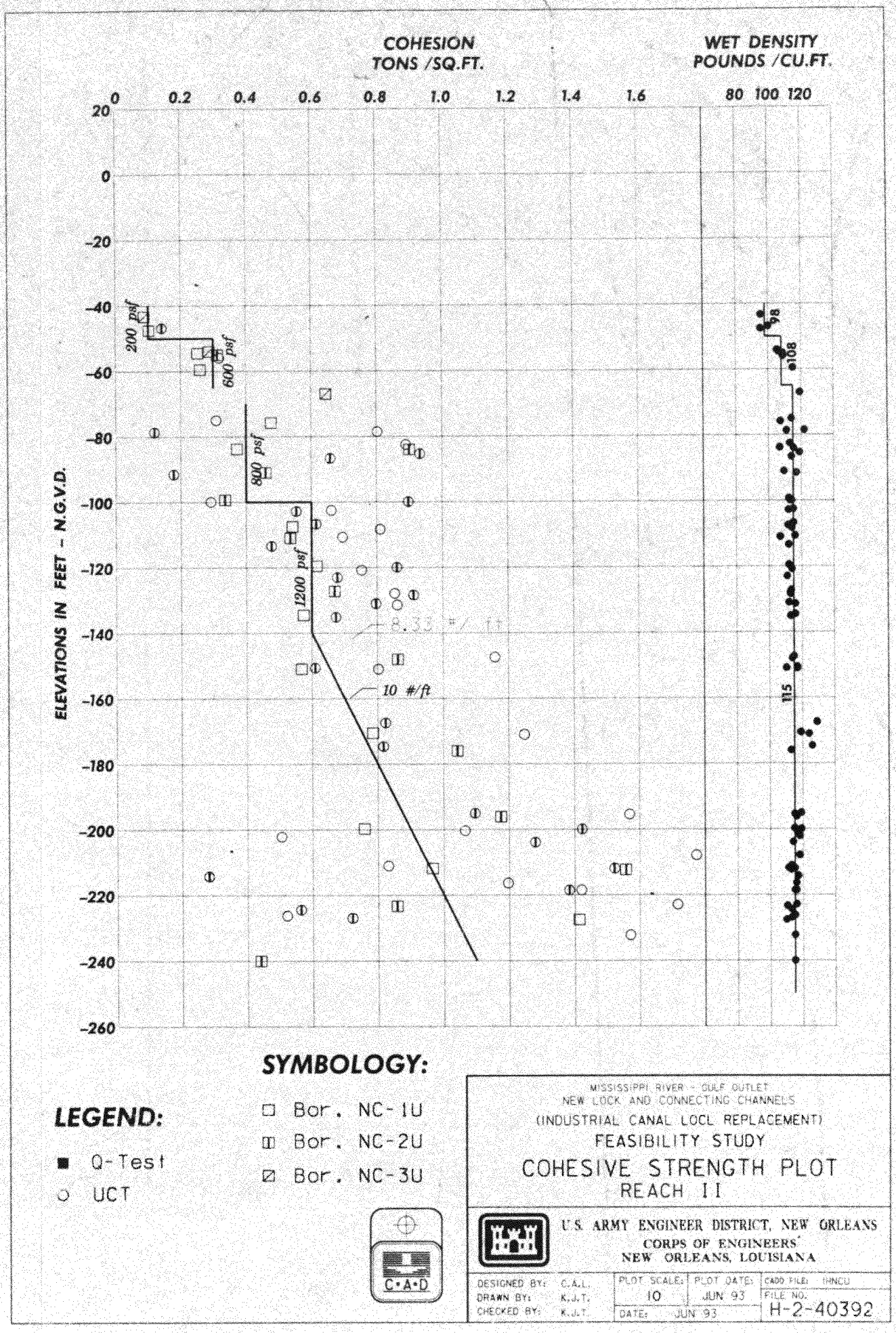

SYMBOLOGY:

LEGEND:

- ■ Q-Test
- ○ UCT

- □ Bor. NC-1U
- ◫ Bor. NC-2U
- ▨ Bor. NC-3U

C•A•D

MISSISSIPPI RIVER - GULF OUTLET
NEW LOCK AND CONNECTING CHANNELS
(INDUSTRIAL CANAL LOCL REPLACEMENT)
FEASIBILITY STUDY

COHESIVE STRENGTH PLOT
REACH II

U.S. ARMY ENGINEER DISTRICT, NEW ORLEANS
CORPS OF ENGINEERS
NEW ORLEANS, LOUISIANA

DESIGNED BY: C.A.L.	PLOT SCALE: 10	PLOT DATE: JUN 93	CADD FILE: (HNCU	
DRAWN BY: K.J.T.			FILE NO.	H-2-40392
CHECKED BY: K.J.T.	DATE: JUN 93			

PLATE B-88

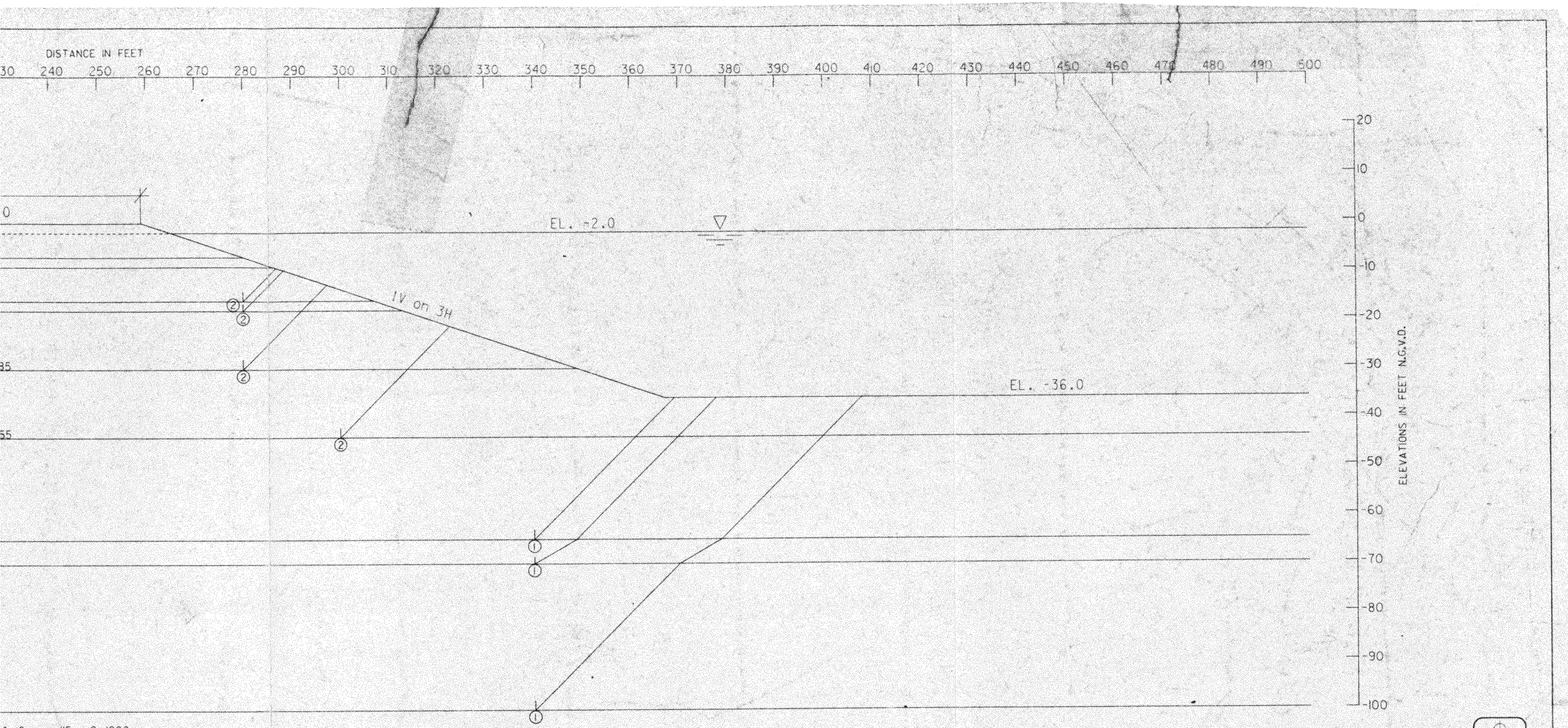

GENERAL NOTES

CLASSIFICATION STRATIFICATION SHEAR STRENGTHS AND UNIT WEIGHTS OF THE SOIL WERE BASED ON THE RESULTS OF THE UNDISTURBED BORINGS. SEE BORING DATA PLATES.

SHEAR STRENGTHS BETWEEN VERTICALS WERE ASSUMED TO VARY LINEARLY BETWEEN THE VALUES INDICATED FOR THESE LOCATIONS.

NOTES

O -- WEDGE NUMBER
⌀ -- CROSSOVER POINT
Φ -- ANGLE OF INTERNAL FRICTION, DEGREES
C -- UNIT COHESION, P.S.F.
▽ -- STATIC WATER SURFACE
D -- HORIZONTAL DRIVING FORCE IN POUNDS
R -- HORIZONTAL RESISTING FORCE IN POUNDS
A -- AS A SUBSCRIPT, REFERS TO ACTIVE WEDGE
B -- AS A SUBSCRIPT REFERS TO CENTRAL BLOCK
P -- AS A SUBSCRIPT REFERS TO PASSIVE WEDGE

FACTOR OF SAFETY = $\frac{R_A + R_B + R_P}{D_A - D_P}$

MISSISSIPPI RIVER - GULF OUTLET
NEW LOCK AND CONNECTING CHANNELS
(INDUSTRIAL CANAL LOCK REPLACEMENT)
FEASIBILITY STUDY
FINAL LEVEE PROTECTION - EAST SIDE
SOILS STABILITY
STA. 13+05 LOCK B/L TO NEW LOCK

U.S. ARMY ENGINEER DISTRICT, NEW ORLEANS
CORPS OF ENGINEERS
NEW ORLEANS, LOUISIANA

DESIGNED BY: K.J.T.	PLOT SCALE: 10	PLOT DATE: JUN 93	CADD FILE: MRLLEVF
DRAWN BY: K.J.T.			FILE NO. H-2-40392
CHECKED BY: K.J.T.	DATE: JUN 93		

PLATE B-89

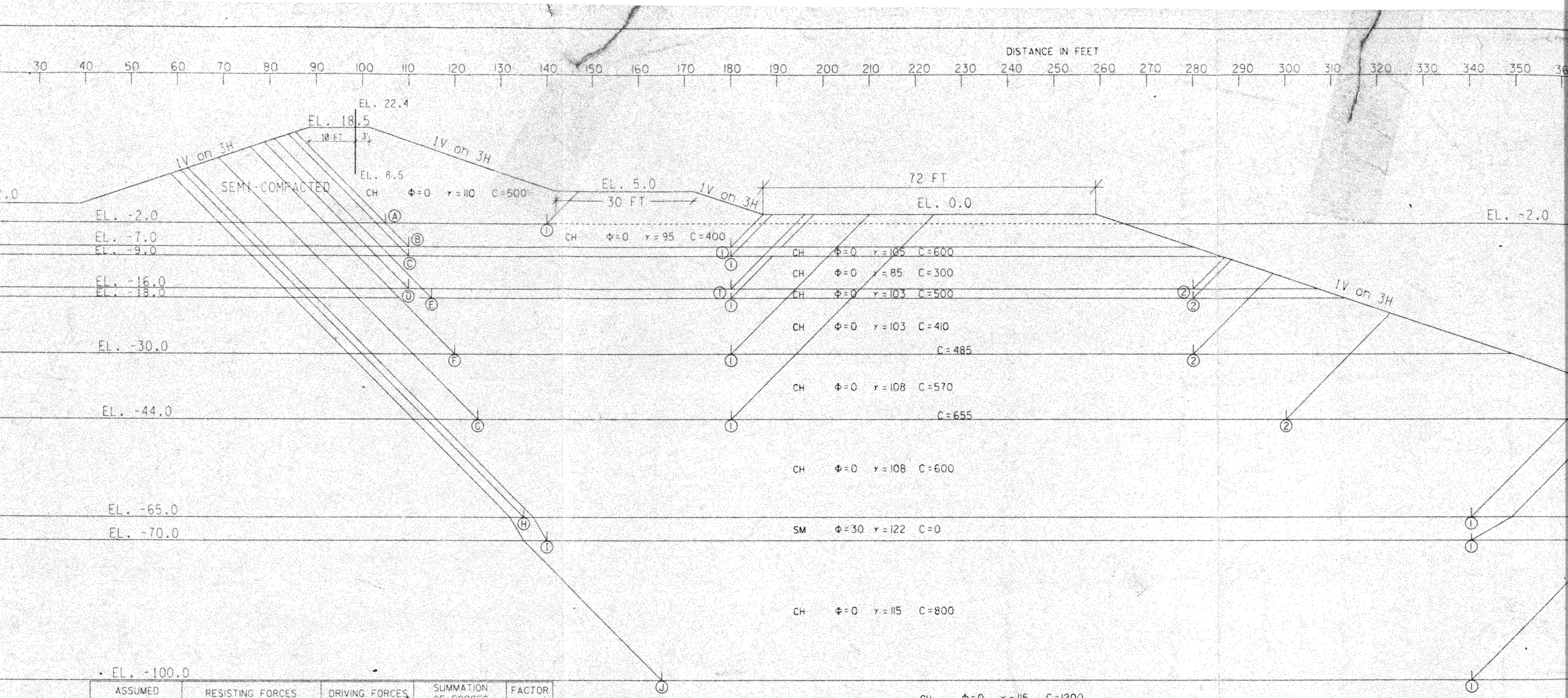

ASSUMED FAILURE SURFACE		RESISTING FORCES			DRIVING FORCES		SUMMATION OF FORCES		FACTOR OF SAFETY
NO.	ELEV.	R_A	R_B	R_P	D_A	$-D_P$	RESISTING	DRIVING	
Ⓐ ①	-2.0	19500	14000	7000	22665	2768	40500	19897	2.04
Ⓑ ①	-7.0	23500	28000	6000	34026	3405	57500	30621	1.88
Ⓒ ①	-9.0	25400	21000	8400	39421	5005	54800	34416	1.59
Ⓓ ①	-16.0	27851	21000	12600	60255	13422	61451	46833	1.31
Ⓓ ②	-16.0	27851	51000	4049	60255	6928	82900	53327	1.55
Ⓔ ①	-18.0	30601	21775	14600	66461	16628	66976	49833	1.34
Ⓔ ②	-18.0	30601	55275	5749	66461	9176	91625	57285	1.60
Ⓕ ①	-30.0	38691	29100	24439	113236	44516	92230	68720	1.34
Ⓕ ②	-30.0	38691	77600	13788	113236	30845	130079	82391	1.58
Ⓖ ①	-44.0	52401	33000	40399	184324	96285	125800	88039	1.43
Ⓖ ②	-44.0	52401	105000	23133	184324	69438	180534	114886	1.57
Ⓗ ①	-65.0	74852	123000	34320	324427	148619	232172	175808	1.32
Ⓘ ①	-70.0	87411	160000	52360	362352	175199	299771	187153	1.60
Ⓙ ①	-100.0	134772	140000	97001	653296	404182	371773	249114	1.49

Stratification and Strengths based on DM #3 - Chalmette Area Plan down to EL. -65
Below EL. -65 , Stratification and Strengths based on Bors. NC-1U, NC-2U and NC-3U

GEN

CLASSIFICA
SHEAR STRENGT
THE SOIL WERE
THE UNDISTURB
DATA PLATES.

SHEAR ST
WERE ASSUMED
THE VALUES IND

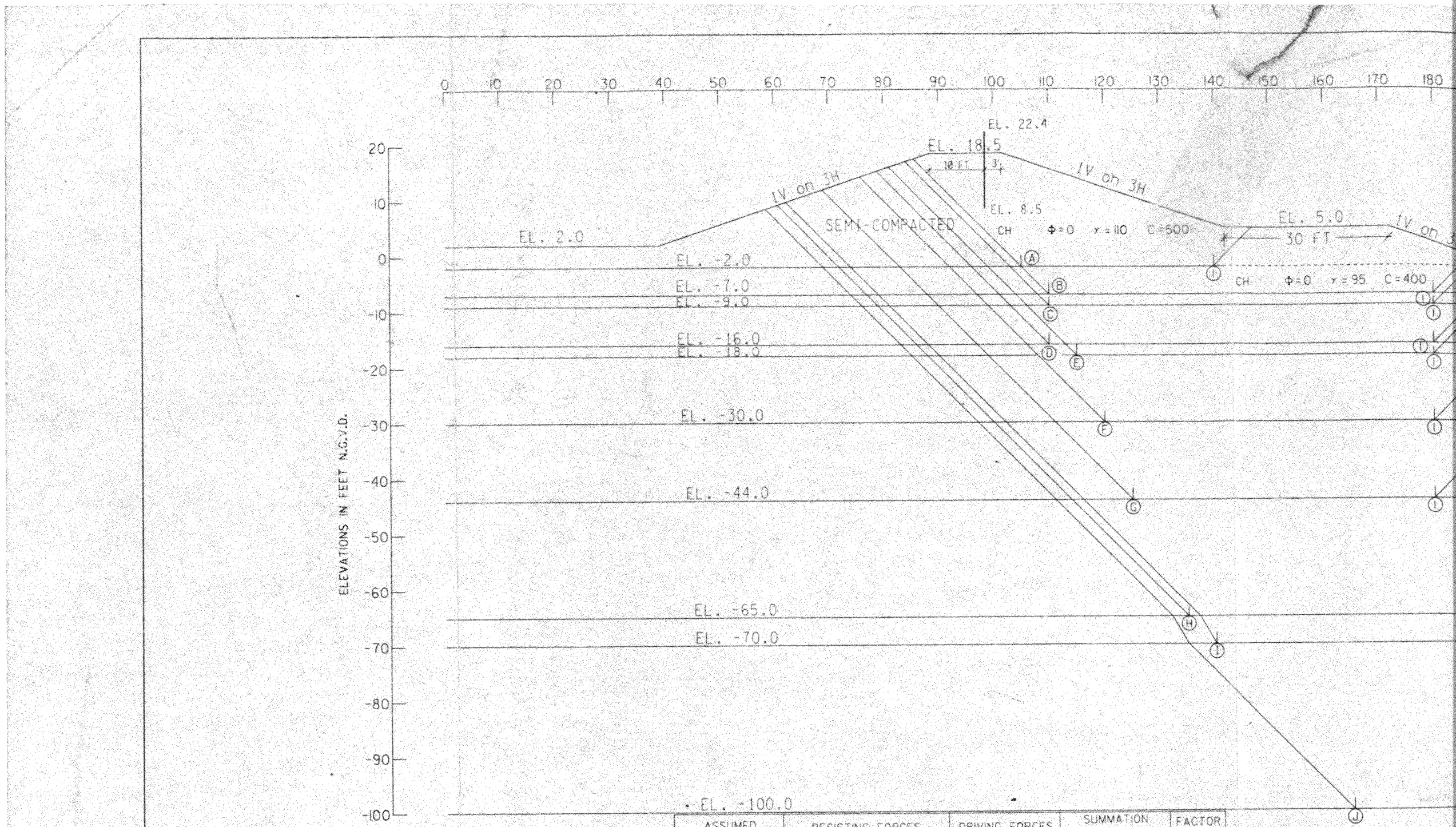

ASSUMED FAILURE SURFACE		RESISTING FORCES			DRIVING FORCES		SUMMATION OF FORCES		FACTOR OF SAFETY
NO.	ELEV.	R_A	R_B	R_P	D_A	$-D_P$	RESISTING	DRIVING	
Ⓐ ①	-2.0	19500	14000	7000	22665	2768	40500	19897	2.04
Ⓑ ①	-7.0	23500	28000	6000	34026	3405	57500	30621	1.88
Ⓒ ①	-9.0	25400	21000	8400	39421	5005	54800	34416	1.59
Ⓓ ①	-16.0	27851	21000	12600	60255	13422	61451	46833	1.31
Ⓓ ②	-16.0	27851	51000	4049	60255	6928	82900	53327	1.55
Ⓔ ①	-18.0	30601	21775	14600	66461	16628	66976	49833	1.34
Ⓔ ②	-18.0	30601	55275	5749	66461	9176	91625	57285	1.60
Ⓕ ①	-30.0	38691	29100	24439	113236	44516	92230	68720	1.34
Ⓕ ②	-30.0	38691	77600	13788	113236	30845	130079	82391	1.58
Ⓖ ①	-44.0	52401	33000	40399	184324	96285	125800	88039	1.43
Ⓖ ②	-44.0	52401	105000	23133	184324	69438	180534	114886	1.57
Ⓗ ①	-65.0	74852	123000	34320	324427	148619	232172	175808	1.32
Ⓘ ①	-70.0	87411	160000	52360	362352	175199	299771	187153	1.60
Ⓙ ①	-100.0	134772	140000	97001	653296	404182	371773	249114	1.49

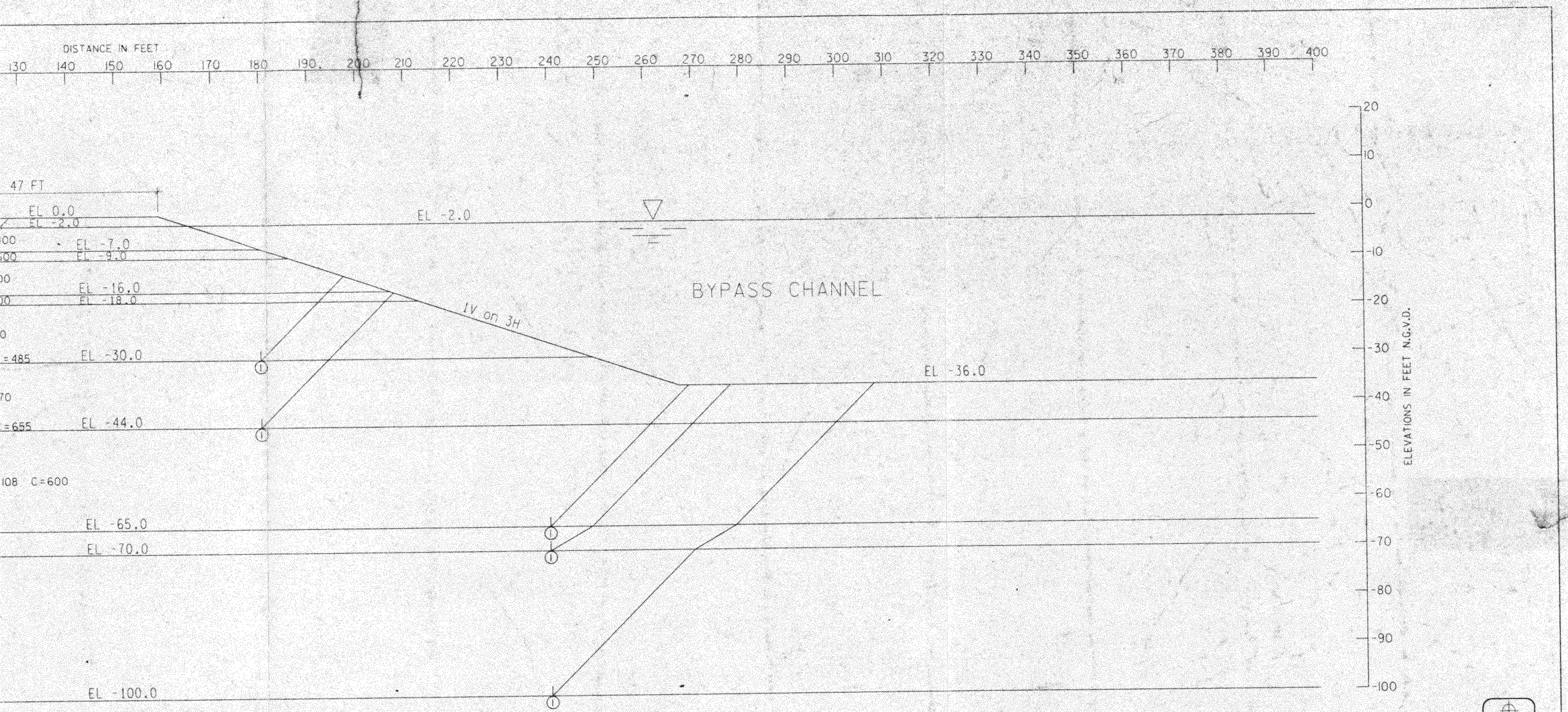

	DRIVING FORCES		SUMMATION OF FORCES		FACTOR OF SAFETY
	D_A	$-D_P$	RESISTING	DRIVING	
99	15713	1484	33249	14229	2.34
49	25769	4802	38749	20967	1.85
00	30284	4180	41801	26104	1.60
99	48746	12597	48200	36149	1.33
99	54647	15803	52925	38844	1.36
88	96849	30845	95804	66004	1.45
48	163382	74335	131199	89047	1.47
20	296488	148619	190422	147869	1.29
50	334611	175199	247159	159412	1.55
101	614712	404182	322523	210530	1.53

Stratification and Strengths based on DM #3 - Chalmette Area Plan down to EL. -65
Below EL. -65 , Stratification and Strengths based on Bors. NC-1U, NC-2U and NC-3U

NOTES

○ -- WEDGE NUMBER
⊿ -- CROSSOVER POINT
Φ -- ANGLE OF INTERNAL FRICTION, DEGREES
C -- UNIT COHESION, P.S.F.
▽ -- STATIC WATER SURFACE
D -- HORIZONTAL DRIVING FORCE IN POUNDS
R -- HORIZONTAL RESISTING FORCE IN POUNDS
A -- AS A SUBSCRIPT, REFERS TO ACTIVE WEDGE
B -- AS A SUBSCRIPT REFERS TO CENTRAL BLOCK
P -- AS A SUBSCRIPT REFERS TO PASSIVE WEDGE

FACTOR OF SAFETY = $\frac{R_A + R_B + R_P}{D_A - D_P}$

MISSISSIPPI RIVER - GULF OUTLET
NEW LOCK AND CONNECTING CHANNELS
(INDUSTRIAL CANAL LOCK REPLACEMENT)
FEASIBILITY STUDY
FINAL LEVEE PROTECTION - EAST SIDE
SOILS STABILITY
STA. 13+05 LOCK B/L TO NEW LOCK

U.S. ARMY ENGINEER DISTRICT, NEW ORLEANS
CORPS OF ENGINEERS
NEW ORLEANS, LOUISIANA

DESIGNED BY: K.J.T.	PLOT SCALE: 10	PLOT DATE: JUN 93	CADD FILE: MRLLEVF2
DRAWN BY: K.J.T.			FILE NO. H-2-40392
CHECKED BY: K.J.T.	DATE: JUN 93		

PLATE B-90

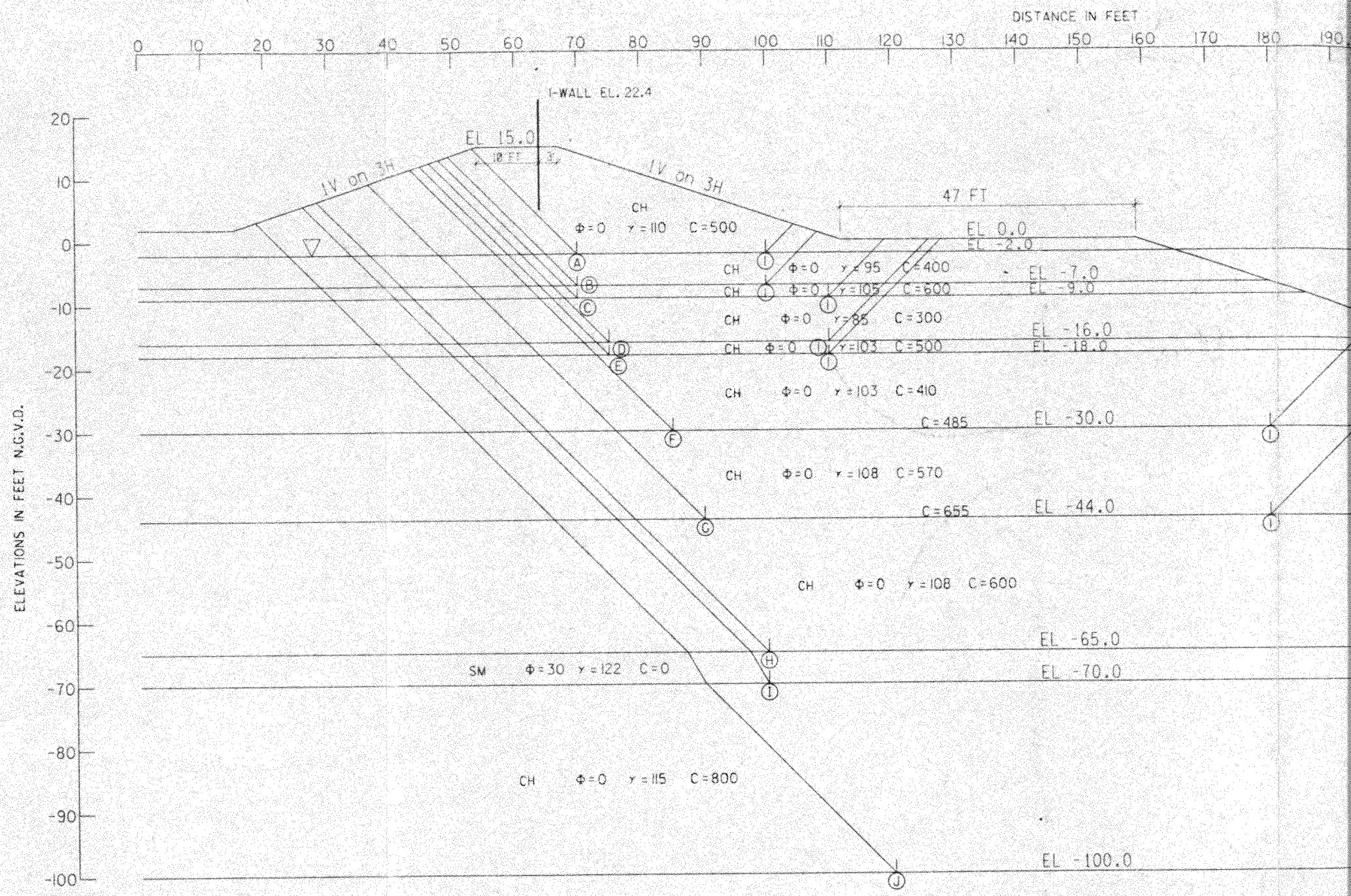

GENERAL NOTES

CLASSIFICATION STRATIFICATION SHEAR STRENGTHS AND UNIT WEIGHTS OF THE SOIL WERE BASED ON THE RESULTS OF THE UNDISTURBED BORINGS. SEE BORING DATA PLATES.

SHEAR STRENGTHS BETWEEN VERTICALS WERE ASSUMED TO VARY LINEARLY BETWEEN THE VALUES INDICATED FOR THESE LOCATIONS.

ASSUMED FAILURE SURFACE		RESISTING FORCES			DRIVING FORCES		SUMMATION OF FORCES		FACTOR OF SAFETY
NO.	ELEV.	R_A	R_B	R_P	D_A	$-D_P$	RESISTING	DRIVING	
Ⓐ Ⓘ	-2.0	16750	12000	4499	15713	1484	33249	14229	2.34
Ⓑ Ⓘ	-7.0	19500	12000	7249	25769	4802	38749	20967	1.85
Ⓒ Ⓘ	-9.0	21401	12000	8400	30284	4180	41801	26104	1.60
Ⓓ Ⓘ	-16.0	25101	10500	12599	48746	12597	48200	36149	1.33
Ⓔ Ⓘ	-18.0	26601	11725	14599	54647	15803	52925	38844	1.36
Ⓕ Ⓘ	-30.0	35941	46075	13788	96849	30845	95804	66004	1.45
Ⓖ Ⓘ	-44.0	49651	54000	27548	163382	74335	131199	89047	1.47
Ⓗ Ⓘ	-65.0	72102	84000	34320	296488	148619	190422	147869	1.29
Ⓘ Ⓘ	-70.0	82799	112000	52360	334611	175199	247159	159412	1.55
Ⓙ Ⓘ	-100.0	129522	96000	97001	614712	404182	322523	210530	1.53

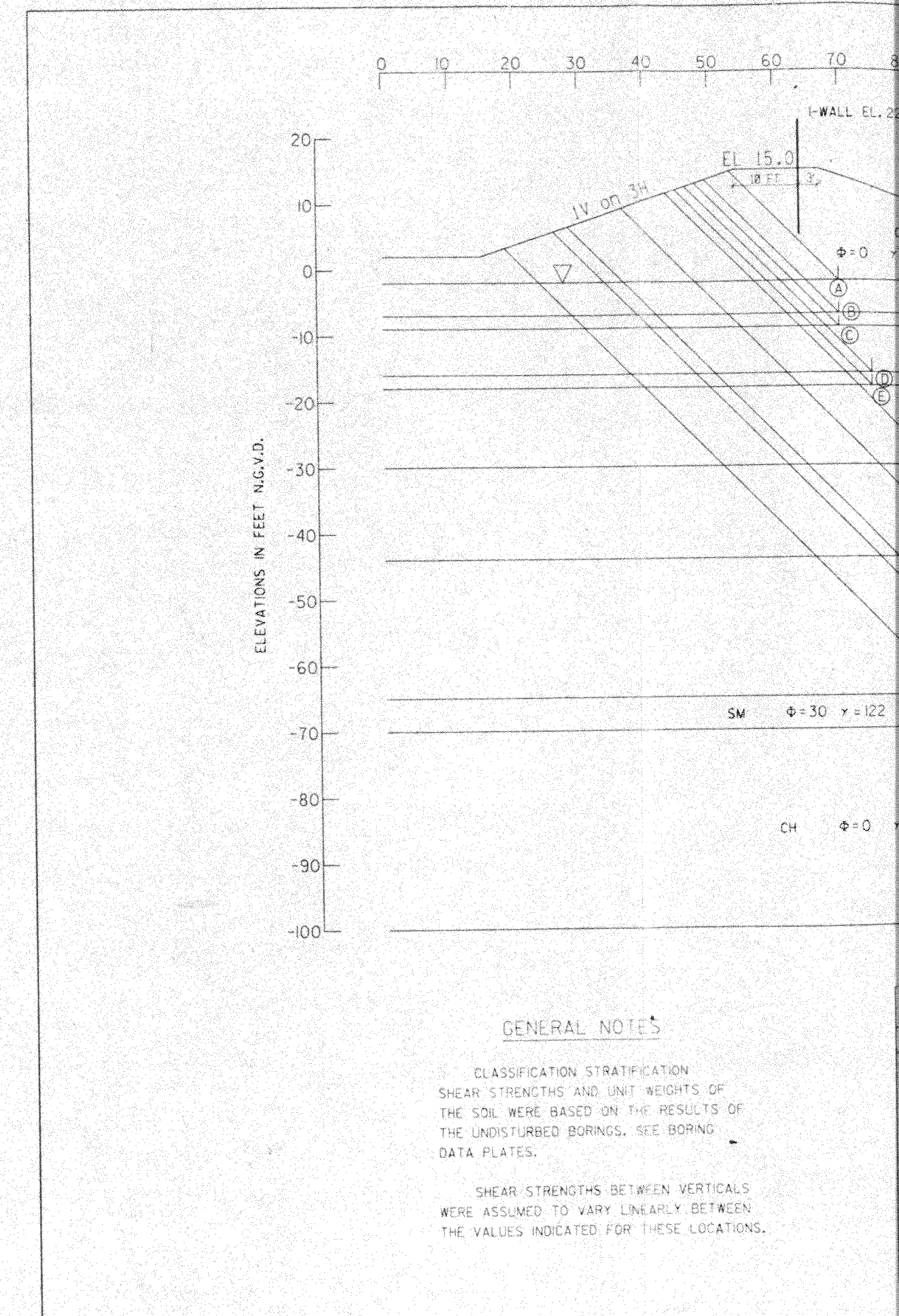

GENERAL NOTES

CLASSIFICATION STRATIFICATION SHEAR STRENGTHS AND UNIT WEIGHTS OF THE SOIL WERE BASED ON THE RESULTS OF THE UNDISTURBED BORINGS. SEE BORING DATA PLATES.

SHEAR STRENGTHS BETWEEN VERTICALS WERE ASSUMED TO VARY LINEARLY BETWEEN THE VALUES INDICATED FOR THESE LOCATIONS.

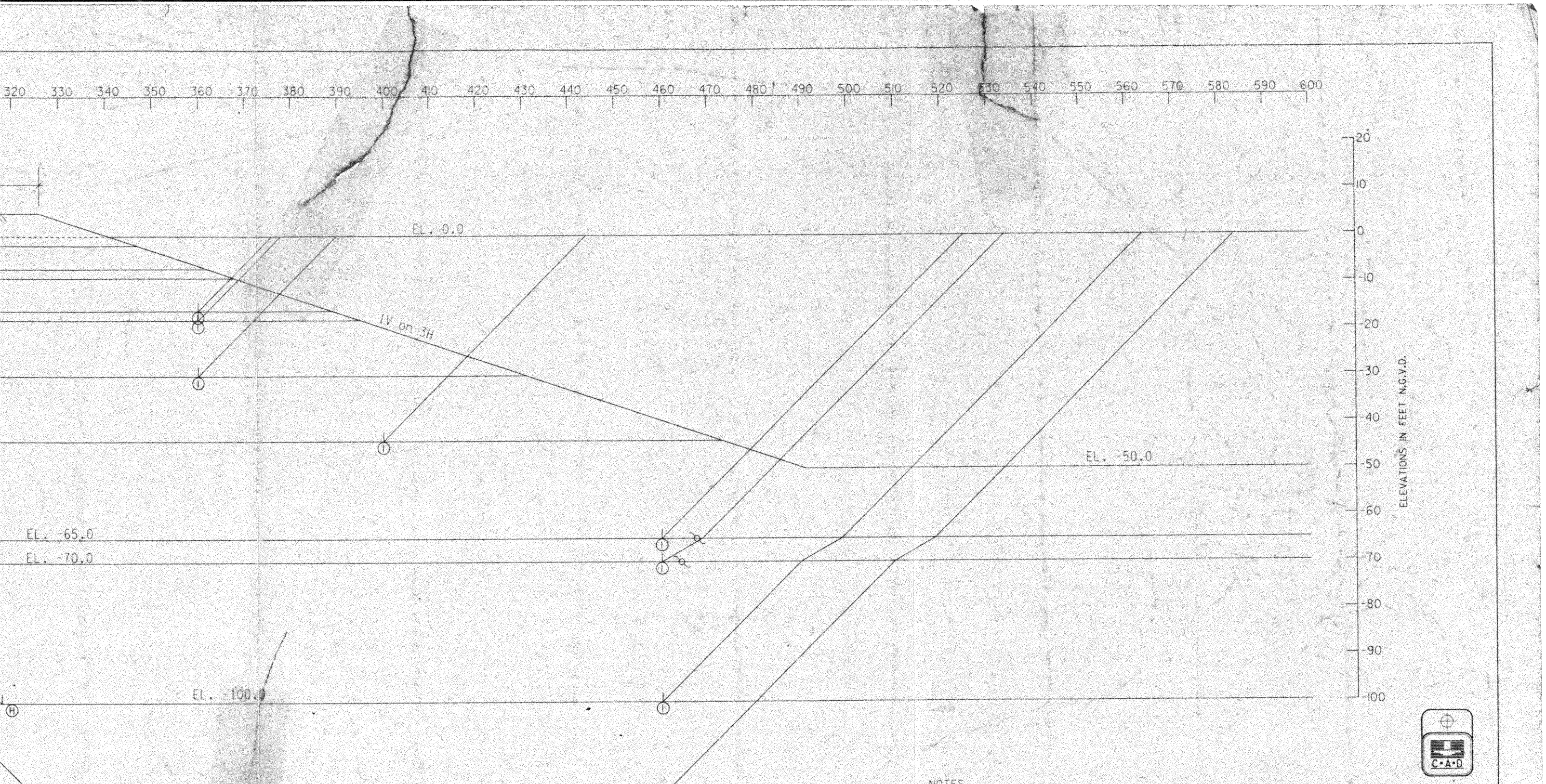

NOTES

○ -- WEDGE NUMBER
℄ -- CROSSOVER POINT
Φ -- ANGLE OF INTERNAL FRICTION, DEGREES
C -- UNIT COHESION, P.S.F.
▽ -- STATIC WATER SURFACE
D -- HORIZONTAL DRIVING FORCE IN POUNDS
R -- HORIZONTAL RESISTING FORCE IN POUNDS
A -- AS A SUBSCRIPT, REFERS TO ACTIVE WEDGE
B -- AS A SUBSCRIPT REFERS TO CENTRAL BLOCK
P -- AS A SUBSCRIPT REFERS TO PASSIVE WEDGE

FACTOR OF SAFETY = $\frac{R_A + R_B + R_P}{D_A - D_P}$

C•A•D

MISSISSIPPI RIVER - GULF OUTLET
NEW LOCK AND CONNECTING CHANNELS
(INDUSTRIAL CANAL LOCK REPLACEMENT)
FEASIBILITY STUDY
TEMPORARY FLOOD PROTECTION - EAST SIDE
SOILS STABILITY
STA. 67+00 (RELOCATION CORRIDOR)

U.S. ARMY ENGINEER DISTRICT, NEW ORLEANS
CORPS OF ENGINEERS
NEW ORLEANS, LOUISIANA

DESIGNED BY: K.J.T.	PLOT SCALE: 10	PLOT DATE: JUN 93	CADD FILE: PLREL67E	
DRAWN BY: K.J.T.			FILE NO. H-2-40392	
CHECKED BY: K.J.T.	DATE: JUN 93			

PLATE B-91

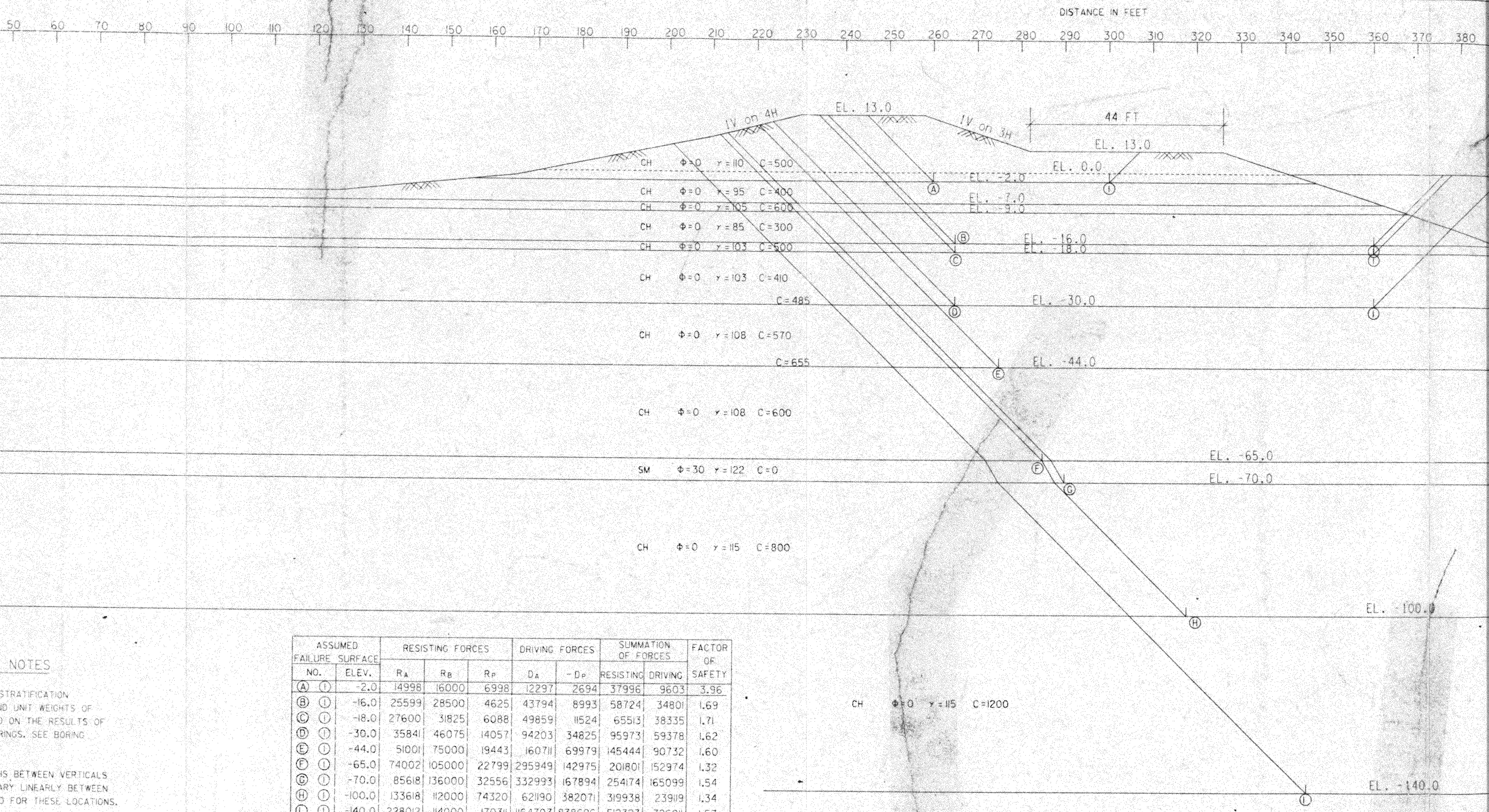

ASSUMED FAILURE SURFACE		RESISTING FORCES			DRIVING FORCES		SUMMATION OF FORCES		FACTOR OF
NO.	ELEV.	R_A	R_B	R_P	D_A	$-D_P$	RESISTING	DRIVING	SAFETY
Ⓐ ①	-2.0	14998	16000	6998	12297	2694	37996	9603	3.96
Ⓑ ①	-16.0	25599	28500	4625	43794	8993	58724	34801	1.69
Ⓒ ①	-18.0	27600	31825	6088	49859	11524	65513	38335	1.71
Ⓓ ①	-30.0	35841	46075	14057	94203	34825	95973	59378	1.62
Ⓔ ①	-44.0	51001	75000	19443	160711	69979	145444	90732	1.60
Ⓕ ①	-65.0	74002	105000	22799	295949	142975	201801	152974	1.32
Ⓖ ①	-70.0	85618	136000	32556	332993	167894	254174	165099	1.54
Ⓗ ①	-100.0	133618	112000	74320	621190	382071	319938	239119	1.34
Ⓘ ①	-140.0	228012	114000	170311	1164707	838696	512323	326011	1.57

NOTES

STRATIFICATION
ND UNIT WEIGHTS OF
) ON THE RESULTS OF
RINGS. SEE BORING

HS BETWEEN VERTICALS
ARY LINEARLY BETWEEN
D FOR THESE LOCATIONS.

Stratification and Strengths Based on DM #3 -
Chalmette Area Plan down to EL. -65
EL. -65 and below based on Bors. NC-1U, NC-2U & NC-3U

GENERAL NOTES

CLASSIFICATION STRATIFICATION
SHEAR STRENGTHS AND UNIT WEIGHTS OF
THE SOIL WERE BASED ON THE RESULTS OF
THE UNDISTURBED BORINGS. SEE BORING
DATA PLATES.

SHEAR STRENGTHS BETWEEN VERTICALS
WERE ASSUMED TO VARY LINEARLY BETWEEN
THE VALUES INDICATED FOR THESE LOCATIONS.

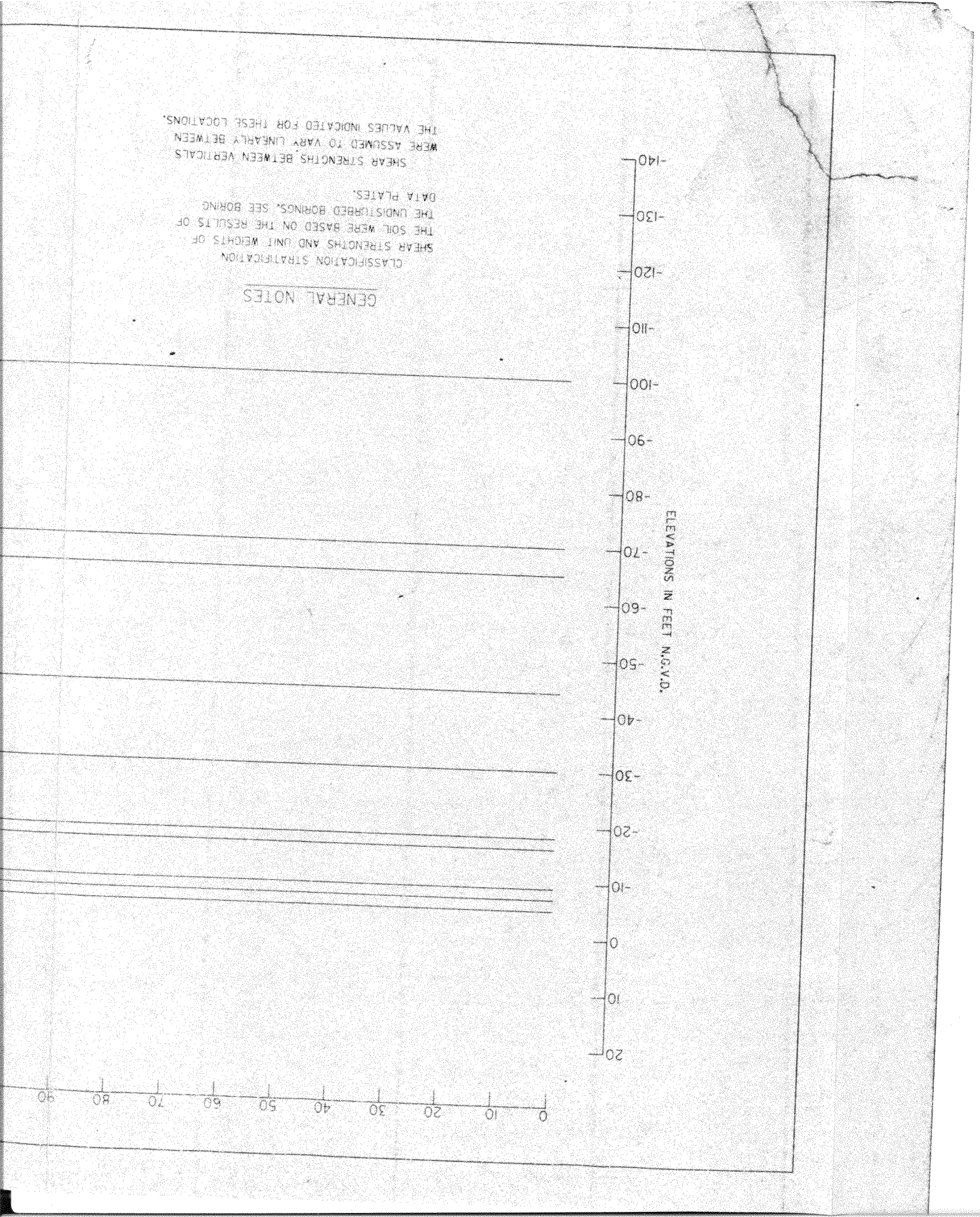


ELEVATIONS IN FEET N.G.V.D.
-14
-13
-12
-11
-10
-9
-8
-7
-6
-5
-4
-3
-2
-1
2

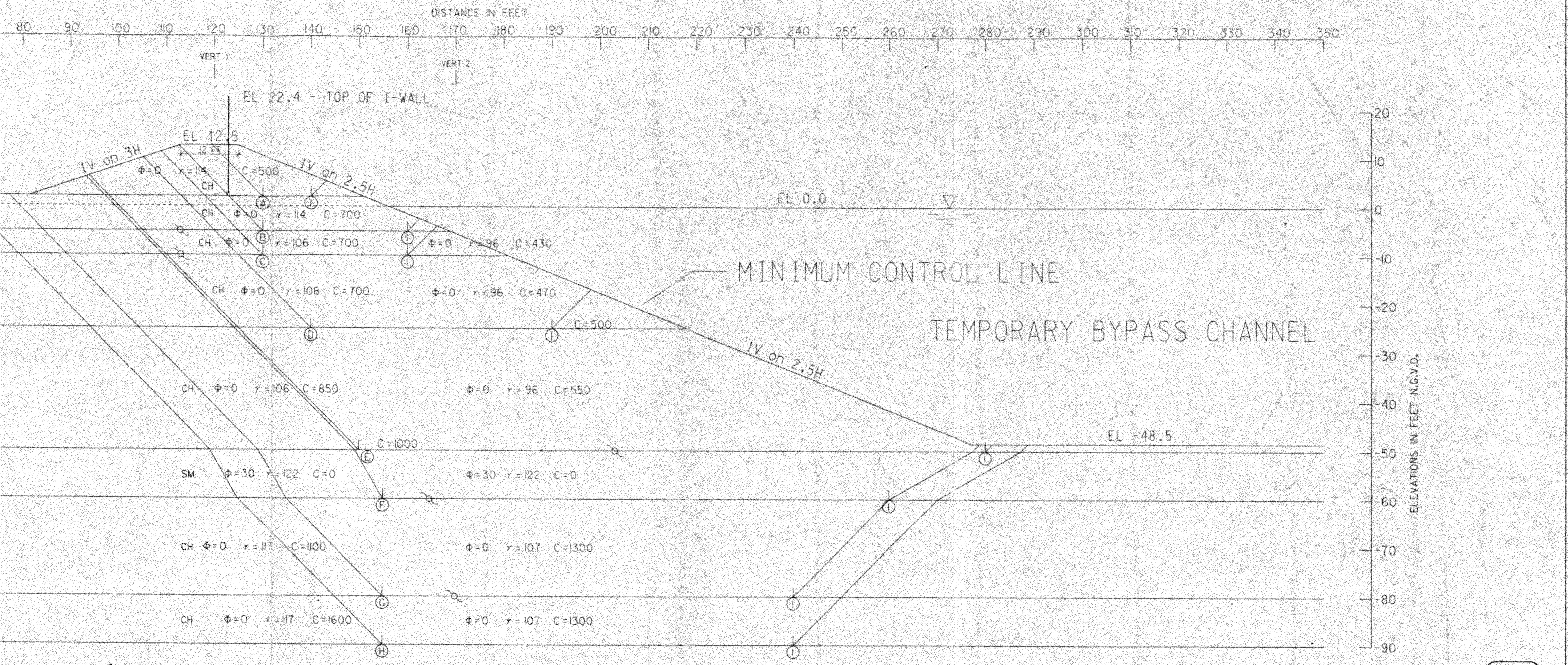

OF SAFETY REFLECTS TEMPORARY AND ISOLATED CONDITIONS DUE TO EXCAVATION OF PIPELINE TRENCH.

ACE V.	RESISTING FORCES R_A	R_B	R_P	DRIVING FORCES D_A	$-D_P$	SUMMATION OF FORCES RESISTING	DRIVING	FACTOR OF SAFETY
2.0	10500	5000	3162	5705	800	18662	4905	3.80
6.0	19647	16799	2301	16816	939	38747	15877	2.44
0.0	25399	17099	5671	27619	4044	48169	23575	2.04
5.0	43816	26799	7590	70819	21065	78205	49754	1.57
0.0	79177	56738	1650	186944	78159	137565	108785	1.26 *
0.0	94721	95479	10830	245057	117124	201030	127933	1.57
0.0	151435	110051	62830	410914	233631	324316	177283	1.83
0.0	181187	111174	86982	508335	305008	379343	203327	1.87

VERT 1 STRENGTHS BASED ON MRL REPORT
VERT 2 STRENGTHS AND STRATIFICATION BASED ON 200 FT EAST

NOTES

◇ - STRATUM NUMBER
○ - WEDGE NUMBER
Ⓒ - CROSSOVER POINT
Φ - ANGLE OF INTERNAL FRICTION, DEGREES
C - UNIT COHESION, P.S.F.
▽ - STATIC WATER SURFACE
D - HORIZONTAL DRIVING FORCE IN POUNDS
R - HORIZONTAL RESISTING FORCE IN POUNDS
A - AS A SUBSCRIPT, REFERS TO ACTIVE WEDGE
B - AS A SUBSCRIPT REFERS TO CENTRAL BLOCK
P - AS A SUBSCRIPT REFERS TO PASSIVE WEDGE

$$\text{FACTOR OF SAFETY} = \frac{R_A + R_B + R_P}{D_A - D_P}$$

C·A·D

MISSISSIPPI RIVER - GULF OUTLET
NEW LOCK AND CONNECTING CHANNELS
(INDUSTRIAL CANAL LOCK REPLACEMENT)
FEASIBILITY STUDY
TEMPORARY FLOOD PROTECTION
SOILS STABILITY
STA. 619+00 (RELOCATION CORRIDOR)

U.S. ARMY ENGINEER DISTRICT, NEW ORLEANS
CORPS OF ENGINEERS
NEW ORLEANS, LOUISIANA

DESIGNED BY: C.A.I.	PLOT SCALE: 10	PLOT DATE: JUN 93	CADD FILE: RELO619E	
DRAWN BY: K.J.T.			FILE NO. H-2-40392	
CHECKED BY: K.J.T.	DATE: JUN 93			

PLATE B-92

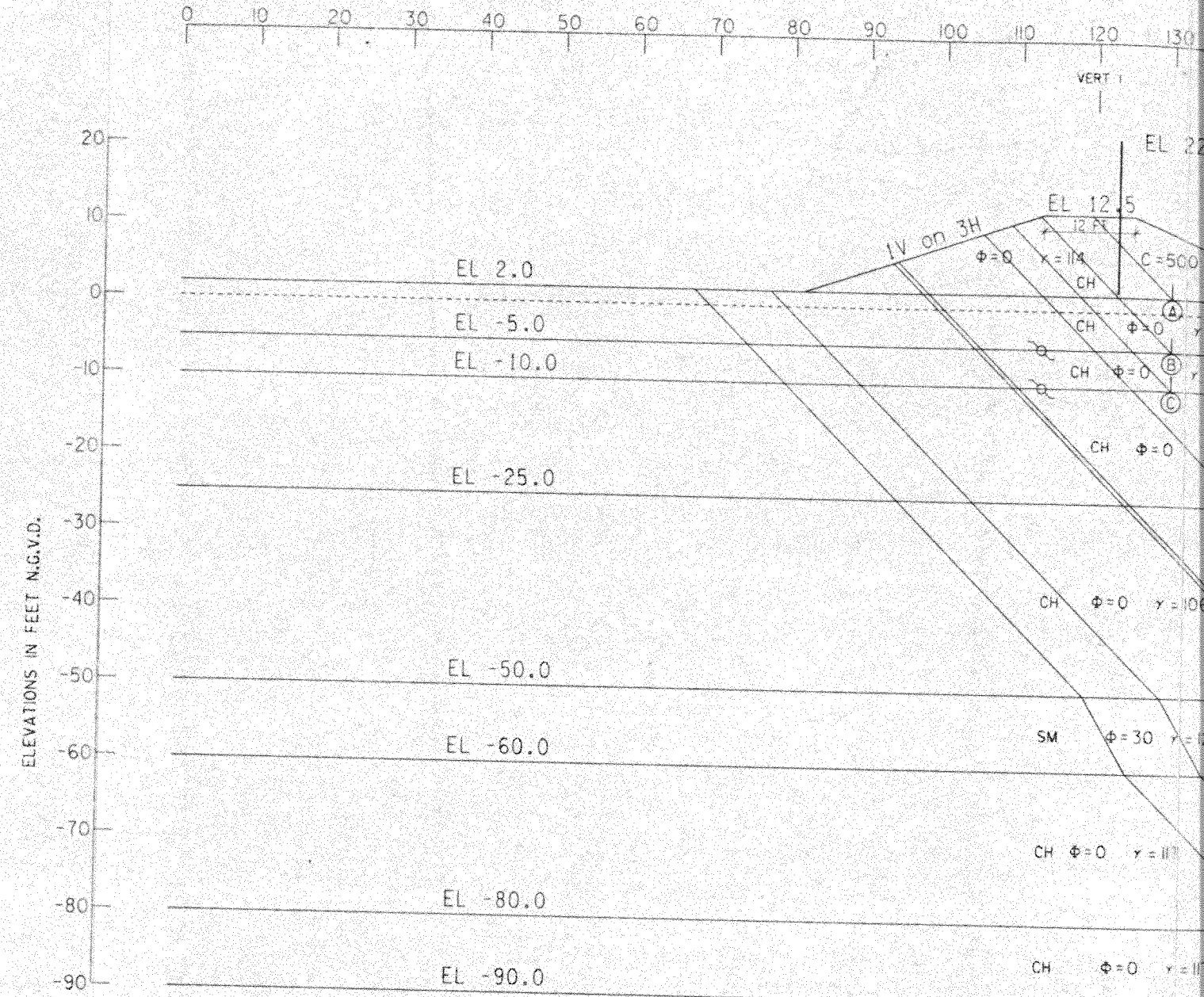

* FACTOR OF SAFETY REFLECTS TEMPORARY AND IS

ASSUMED FAILURE SURFACE		RESISTING FORCES			DRIVING FORCES		SU OF
NO.	ELEV.	R_A	R_B	R_P	D_A	$-D_P$	RESIST
Ⓐ ①	2.0	10500	5000	3162	5705	800	186
Ⓑ ①	-5.0	19647	16799	2301	16816	939	387
Ⓒ ①	-10.0	25399	17099	5671	27619	4044	481
Ⓓ ①	-25.0	43816	26799	7590	70819	21065	782
Ⓔ ①	-50.0	79177	56738	1650	186944	78159	1375
Ⓕ ①	-60.0	94721	95479	10830	245057	117124	2010
Ⓖ ①	-80.0	151435	110051	62830	410914	233631	3243
Ⓗ ①	-90.0	181187	111174	86982	508335	305008	3793

GENERAL NOTES

CLASSIFICATION STRATIFICATION SHEAR STRENGTHS AND UNIT WEIGHTS OF THE SOIL WERE BASED ON THE RESULTS OF THE UNDISTURBED BORINGS. SEE BORING DATA PLATES.

SHEAR STRENGTHS BETWEEN VERTICALS WERE ASSUMED TO VARY LINEARLY BETWEEN THE VALUES INDICATED FOR THESE LOCATIONS.

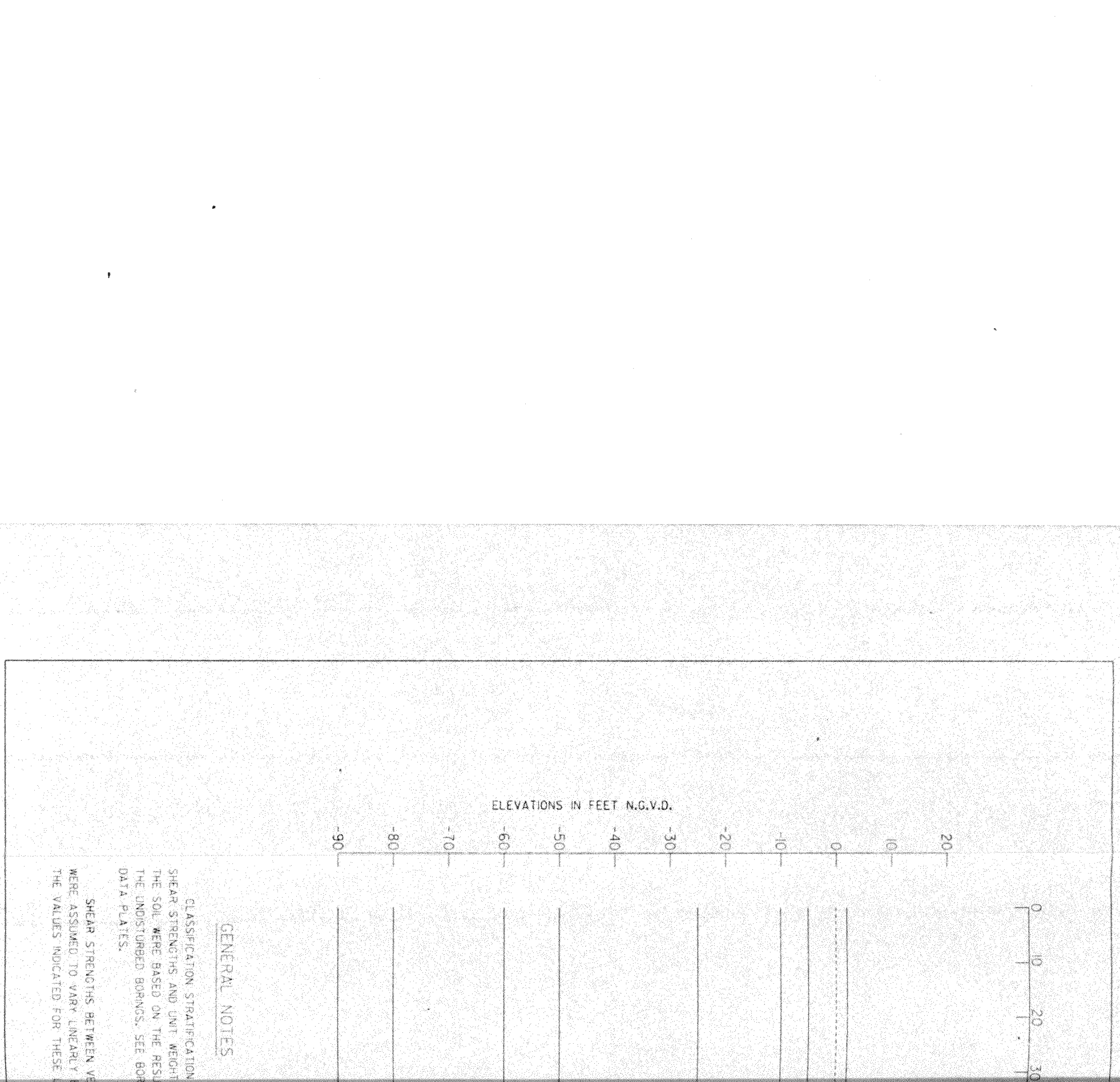

GENERAL NOTES

CLASSIFICATION STRATIFICATION

SHEAR STRENGTHS AND UNIT WEIGHT

THE SOIL WERE BASED ON THE RESU

THE UNDISTURBED BORINGS. SEE BOR

DATA PLATES.

SHEAR STRENGTHS BETWEEN VE

WERE ASSUMED TO VARY LINEARLY

THE VALUES INDICATED FOR THESE

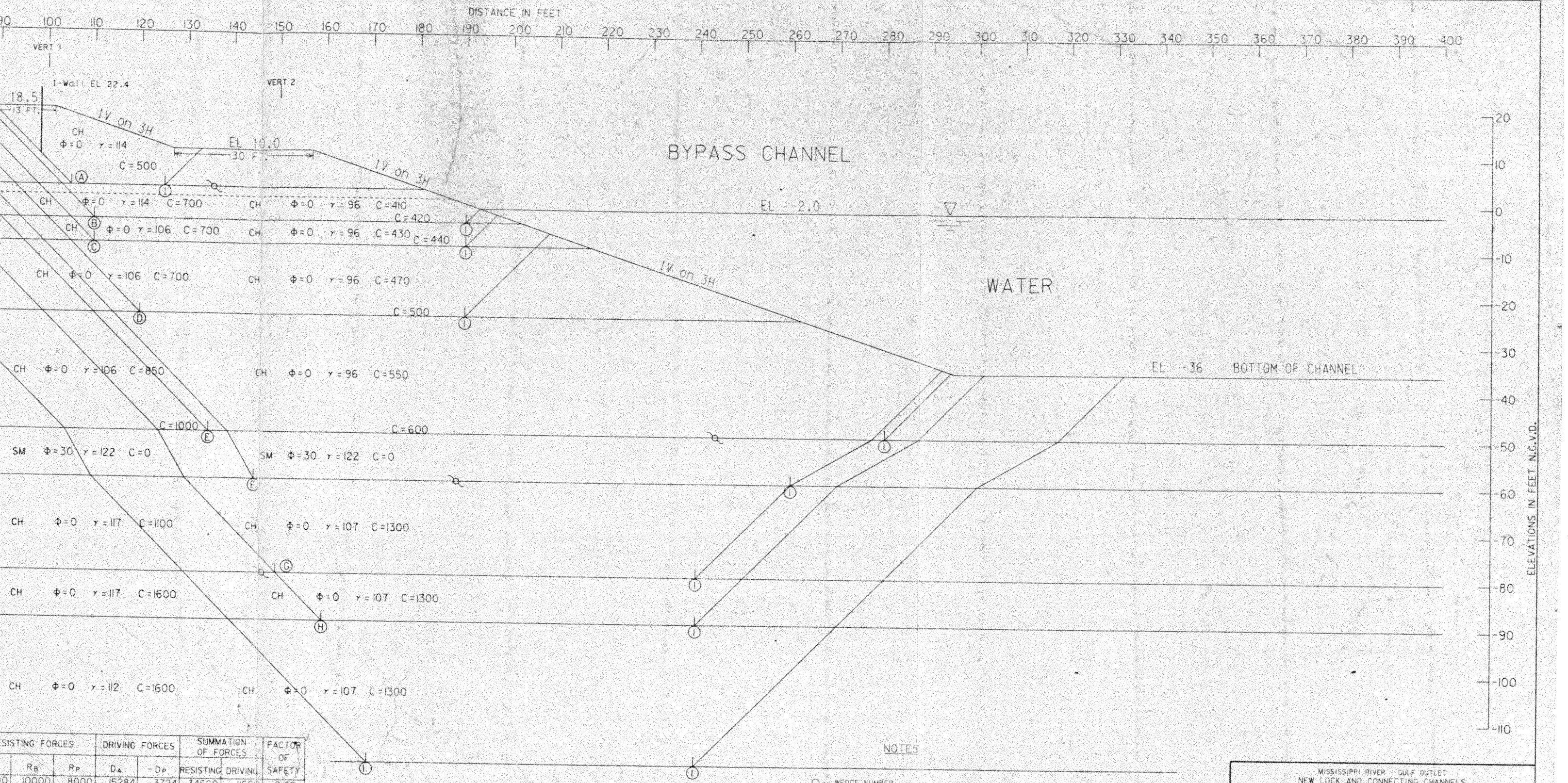

SISTING FORCES			DRIVING FORCES		SUMMATION OF FORCES		FACTOR OF SAFETY
	R_B	R_P	D_A	$-D_P$	RESISTING	DRIVING	
0	10000	8000	15284	3724	34500	11560	2.98
2	38079	2458	29988	982	65809	29006	2.27
4	39359	5733	43997	4142	76116	39855	1.91
41	36800	16678	96718	26765	102919	69953	1.47
6	83705	15675	227083	82657	183586	144426	1.27
5	133032	3762	290159	128073	275178	162086	1.70
5	117000	89622	466195	255798	364547	210397	1.73
5	104000	112377	564009	331560	400302	232443	1.72
7	91000	186728	930086	621757	543175	308329	1.76

VERT 1 strengths based on MRL soils report

VERT 2 strengths based 200 ft east line

NOTES

○ -- WEDGE NUMBER
⊘ -- CROSSOVER POINT
Φ -- ANGLE OF INTERNAL FRICTION, DEGREES
C -- UNIT COHESION, P.S.F.
▽ -- STATIC WATER SURFACE
D -- HORIZONTAL DRIVING FORCE IN POUNDS
R -- HORIZONTAL RESISTING FORCE IN POUNDS
A -- AS A SUBSCRIPT, REFERS TO ACTIVE WEDGE
B -- AS A SUBSCRIPT REFERS TO CENTRAL BLOCK
P -- AS A SUBSCRIPT REFERS TO PASSIVE WEDGE

FACTOR OF SAFETY = $\frac{R_A + R_B + R_P}{D_A - D_P}$

C·A·D

MISSISSIPPI RIVER - GULF OUTLET
NEW LOCK AND CONNECTING CHANNELS
(INDUSTRIAL CANAL LOCK REPLACEMENT)
FEASIBILITY STUDY
FINAL LEVEE PROTECTION
SOILS STABILITY
STA. 619+00 (RELOCATION CORRIDOR)

U.S. ARMY ENGINEER DISTRICT, NEW ORLEANS
CORPS OF ENGINEERS
NEW ORLEANS, LOUISIANA

DESIGNED BY: K.J.T.	PLOT SCALE: 10	PLOT DATE: JUN 93	CADD FILE: PLBPF619	
DRAWN BY: K.J.T.			FILE NO.	H-2-40392
CHECKED BY: K.J.T.	DATE: JUN 93			

PLATE B-93

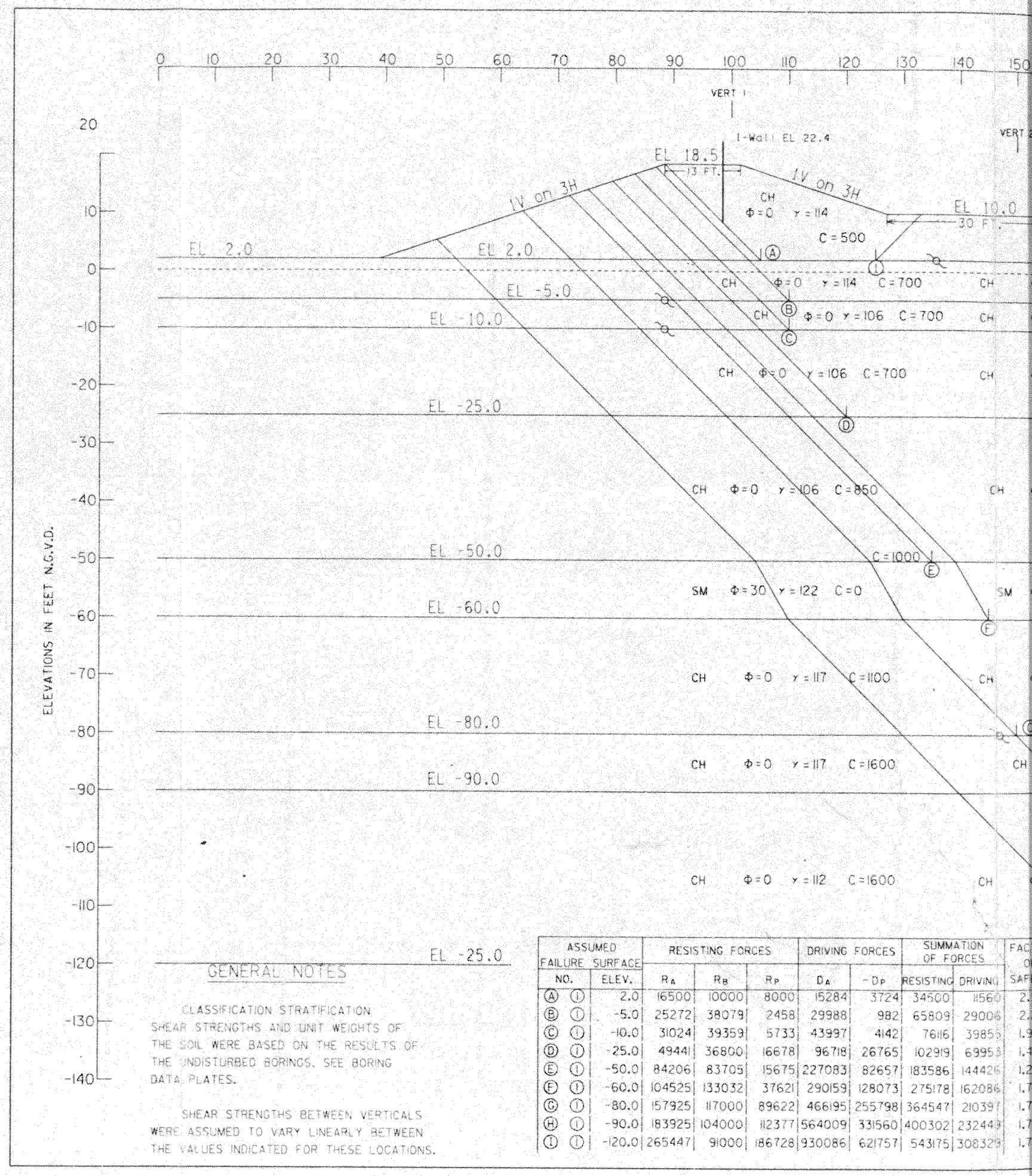

GENERAL NOTES

CLASSIFICATION STRATIFICATION SHEAR STRENGTHS AND UNIT WEIGHTS OF THE SOIL WERE BASED ON THE RESULTS OF THE UNDISTURBED BORINGS. SEE BORING DATA PLATES.

SHEAR STRENGTHS BETWEEN VERTICALS WERE ASSUMED TO VARY LINEARLY BETWEEN THE VALUES INDICATED FOR THESE LOCATIONS.

ASSUMED FAILURE SURFACE		RESISTING FORCES			DRIVING FORCES		SUMMATION OF FORCES		FAC O
NO.	ELEV.	R_A	R_B	R_P	D_A	$-D_P$	RESISTING	DRIVING	SAF
Ⓐ Ⓘ	2.0	16500	10000	8000	15284	3724	34500	11560	2.
Ⓑ Ⓘ	-5.0	25272	38079	2458	29988	982	65809	29006	2.
Ⓒ Ⓘ	-10.0	31024	39359	5733	43997	4142	76116	39855	1.9
Ⓓ Ⓘ	-25.0	4944	36800	16678	96718	26765	102919	69953	1.4
Ⓔ Ⓘ	-50.0	84206	83705	15675	227083	82657	183586	144426	1.2
Ⓕ Ⓘ	-60.0	104525	133032	37621	290159	128073	275178	162086	1.7
Ⓖ Ⓘ	-80.0	157925	117000	89622	466195	255798	364547	210397	1.7
Ⓗ Ⓘ	-90.0	183925	104000	112377	564009	331560	400302	232443	1.7
Ⓘ Ⓘ	-120.0	265447	91000	186728	930086	621757	543175	308329	1.7

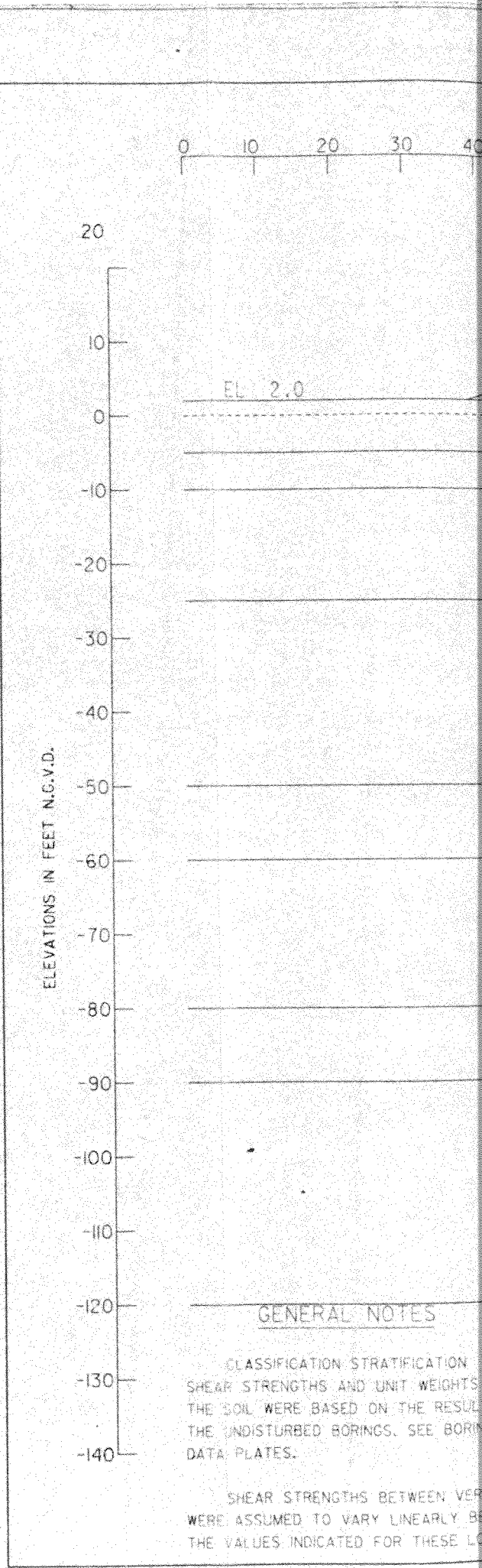
0
10
20
30
20
10
0
-10
-20
-30
-40
-50
-60
-70
-80
-90
-100
-110
-120
-130
-140
EL. 2.0
ELEVATIONS IN FEET N.G.V.D.
GENERAL NOTES
CLASSIFICATION STRATIFICATION
SHEAR STRENGTHS AND UNIT WEIGHTS
THE SOIL WERE BASED ON THE RESU
THE UNDISTURBED BORINGS. SEE BORI
DATA PLATES.
SHEAR STRENGTHS BETWEEN VE
WERE ASSUMED TO VARY LINEARLY B
THE VALUES INDICATED FOR THESE L

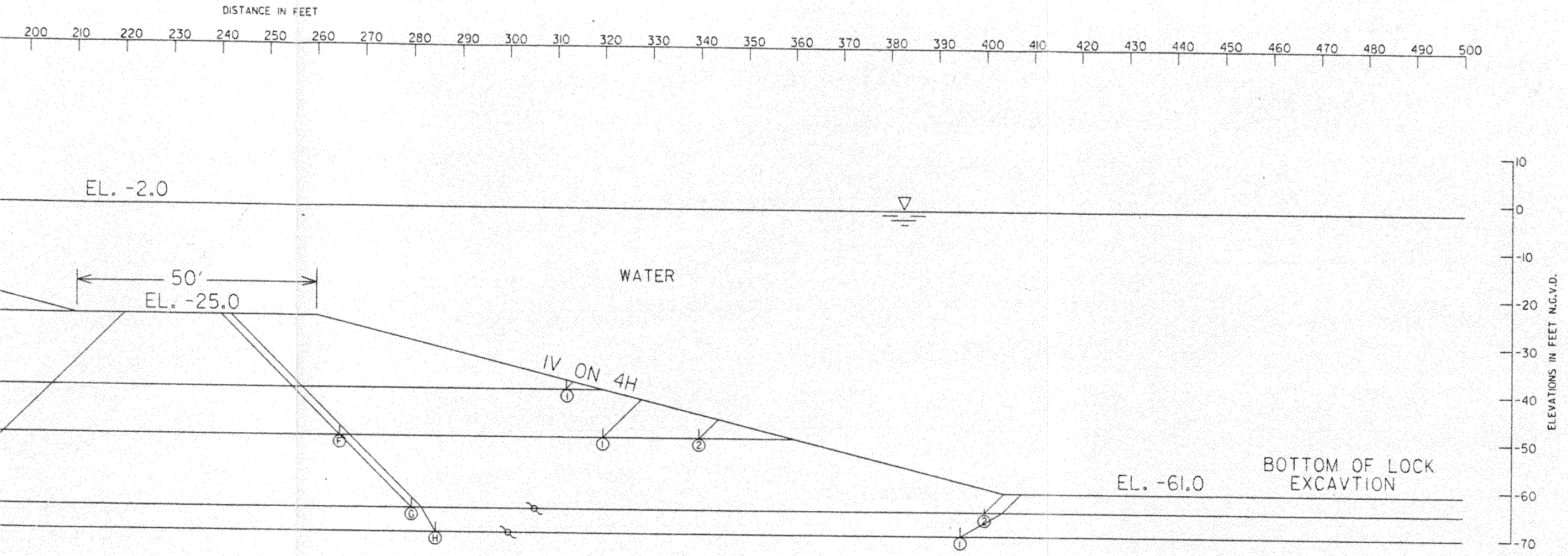

Stratification and Strengths Based on Bors. NC-1U, NC-2U & NC-3U

NOTES

○ -- STRATUM NUMBER
○ -- WEDGE NUMBER
ᔕ -- CROSSOVER POINT
ϕ -- ANGLE OF INTERNAL FRICTION, DEGREES
C -- UNIT COHESION, P.S.F.
▽ -- STATIC WATER SURFACE
D -- HORIZONTAL DRIVING FORCE IN POUNDS
R -- HORIZONTAL RESISTING FORCE IN POUNDS
A -- AS A SUBSCRIPT, REFERS TO ACTIVE WEDGE
B -- AS A SUBSCRIPT REFERS TO CENTRAL BLOCK
P -- AS A SUBSCRIPT REFERS TO PASSIVE WEDGE

FACTOR OF SAFETY = $\frac{R_A + R_B + R_P}{D_A - D_P}$

GENERAL NOTES

* CLASSIFICATION STRATIFICATION SHEAR STRENGTHS AND UNIT WEIGHTS OF THE SOIL WERE BASED ON THE RESULTS OF THE UNDISTURBED BORINGS. SEE BORING DATA PLATES.

SHEAR STRENGTHS BETWEEN VERTICALS WERE ASSUMED TO VARY LINEARLY BETWEEN THE VALUES INDICATED FOR THESE LOCATIONS.

C•A•D

MISSISSIPPI RIVER - GULF OUTLET
NEW LOCK AND CONNECTING CHANNELS
(INDUSTRIAL CANAL LOCK REPLACEMENT)
FEASIBILITY STUDY
LOCK EXCAVATION
SOILS STABILITY
WEST SIDE

U.S. ARMY ENGINEER DISTRICT, NEW ORLEANS
CORPS OF ENGINEERS
NEW ORLEANS, LOUISIANA

DESIGNED BY: K.J.T.	PLOT SCALE: 10	PLOT DATE: JUL 96	CADD FILE: EXC96W	
DRAWN BY: K.J.T.			FILE NO. H-2-40392	
CHECKED BY: K.J.T.	DATE: JUL 96			

PLATE B-94

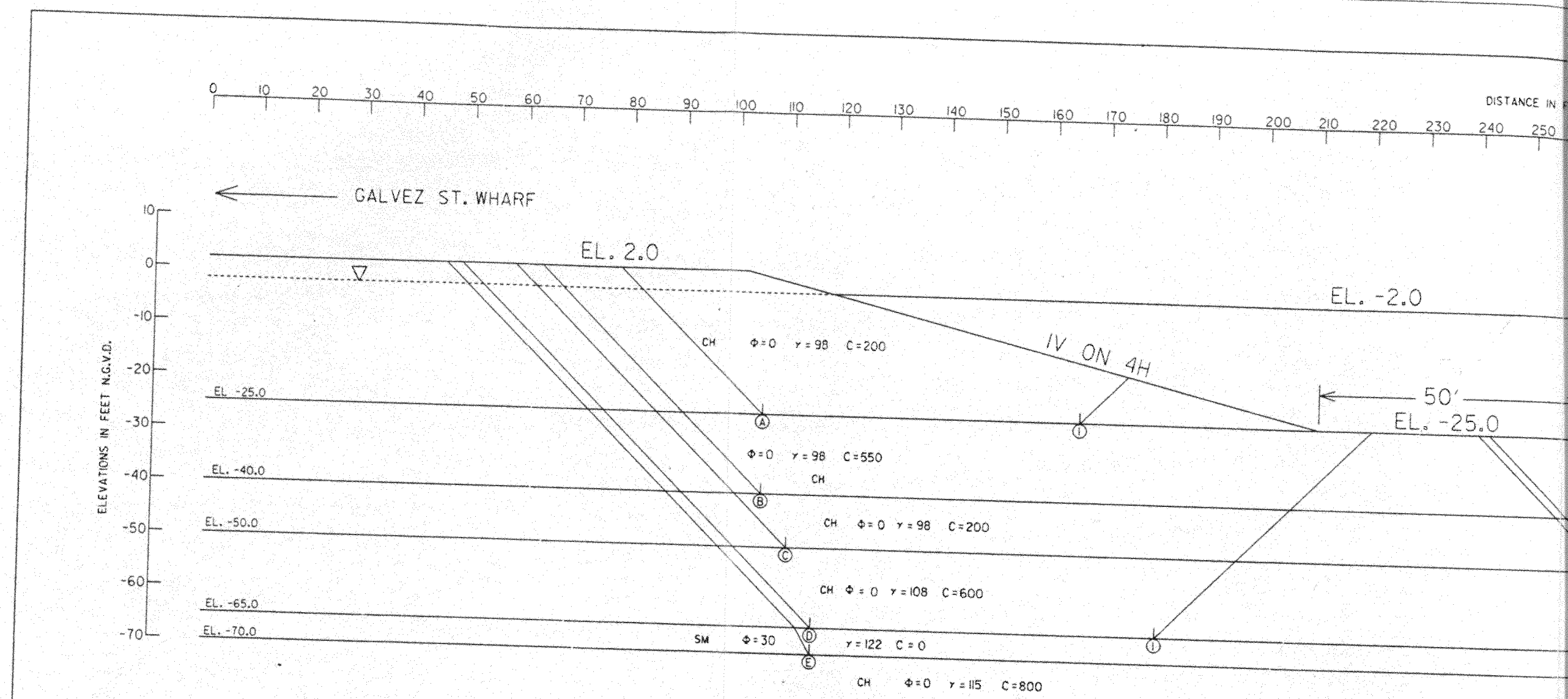

ASSUMED FAILURE SURFACE		RESISTING FORCES			DRIVING FORCES		SUMMATION OF FORCES		FACTOR OF SAFETY
NO.	ELEV.	R_A	R_B	R_P	D_A	$-D_P$	RESISTING	DRIVING	
Ⓐ ①	-25.0	10800	12000	3600	35609	18328	26400	17281	1.53
Ⓑ ①	-40.0	27300	43000	120	86323	45124	70298	41199	1.71
Ⓒ ①	-50.0	31300	42000	3199	131707	73418	76499	58289	1.31
Ⓓ ①	-65.0	49300	39000	38500	219007	157546	126800	61461	2.06
Ⓓ ②	-65.0	49300	147069	4800	219007	124482	201169	94525	2.13
Ⓔ ①	-70.0	57696	200092	7388	253513	146779	265176	106734	2.48
Ⓕ ②	-50.0	20499	15000	1599	82979	72353	37098	10626	3.49
Ⓖ ②	-65.0	38499	48069	4800	151775	124482	91368	27293	3.35
Ⓗ ①	-70.0	43113	65329	6962	179396	146566	115404	32830	3.52

Stratification and Streng
Bors. NC-1U, NC-2U & NC-3

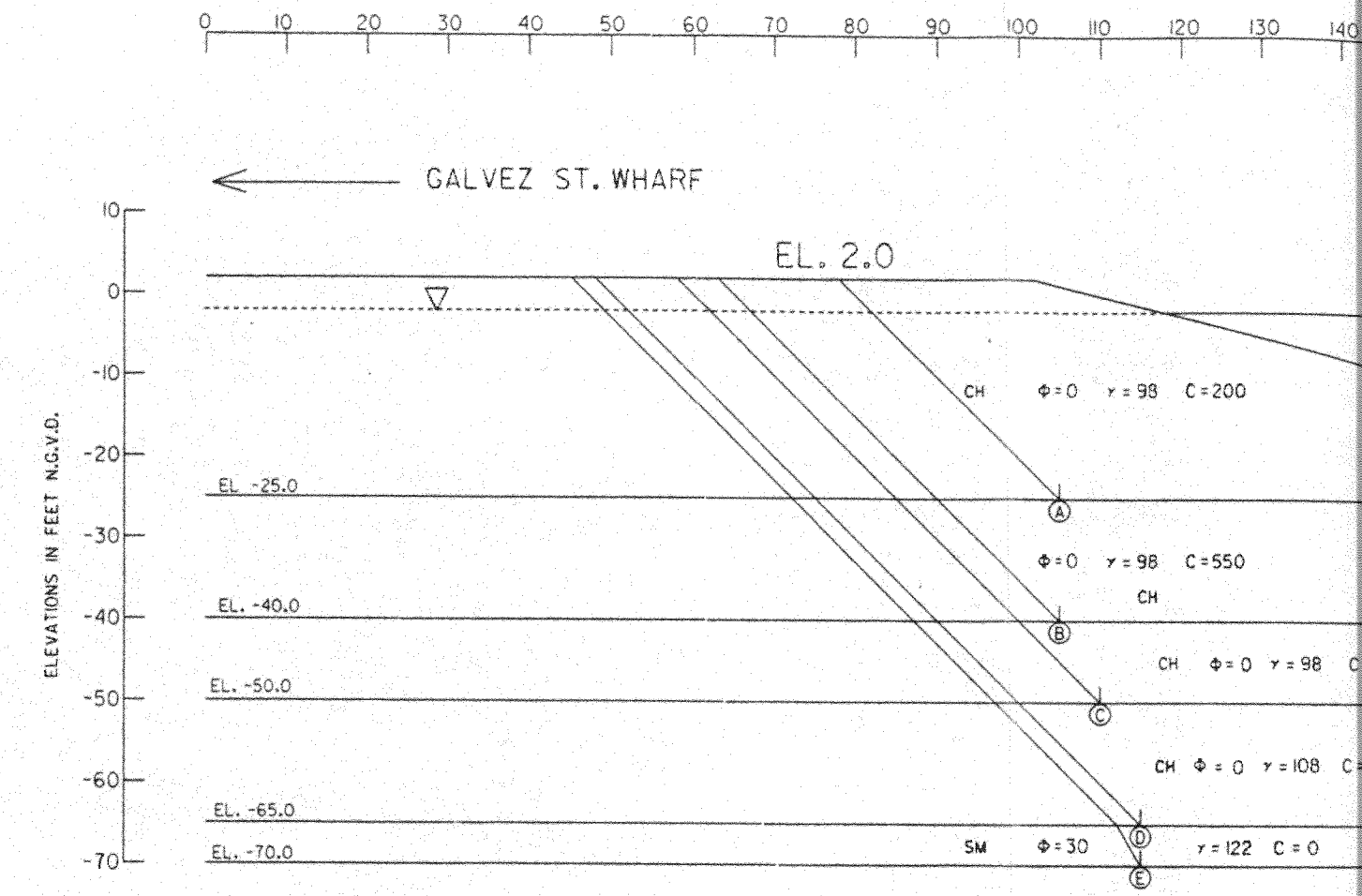

ASSUMED FAILURE SURFACE		RESISTING FORCES			DRIVING FORCES		SUMMAT OF FOR	
NO.		ELEV.	R_A	R_B	R_P	D_A	$-D_P$	RESISTING	D
Ⓐ	①	-25.0	10800	12000	3600	35609	18328	26400	
Ⓑ	①	-40.0	27300	43000	120	86323	45124	70298	
Ⓒ	①	-50.0	31300	42000	3199	131707	73418	76499	
Ⓓ	①	-65.0	49300	39000	38500	219007	157546	126800	
Ⓓ	②	-65.0	49300	147069	4800	219007	124482	201169	
Ⓔ	①	-70.0	57696	200092	7388	253513	146779	265176	
Ⓕ	②	-50.0	20499	15000	1599	82979	72353	37098	
Ⓒ	②	-65.0	38499	48069	4800	151775	124482	91368	
Ⓗ	①	-70.0	43113	65329	696.2	179396	146566	115404	

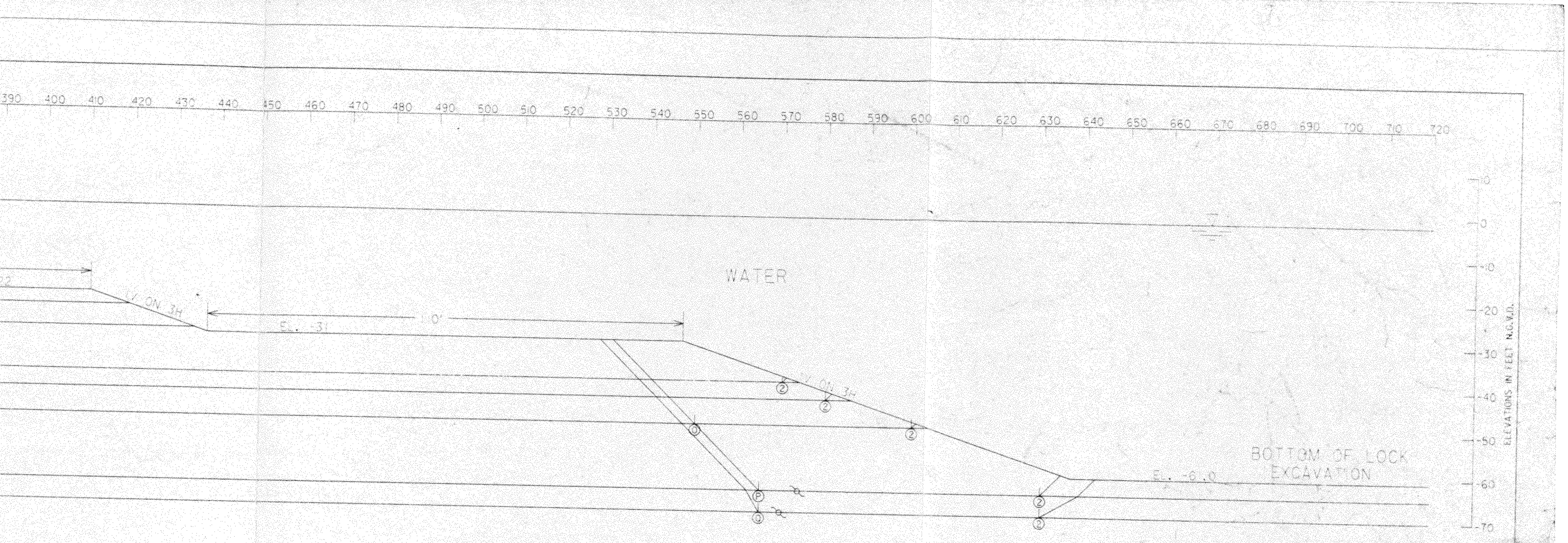

Based on DM#3 -
EL. -65
Bors. NC-1U, NC-2U & NC-3U

Based on Bors.

GENERAL NOTES

CLASSIFICATION STRATIFICATION SHEAR STRENGTHS AND UNIT WEIGHTS OF THE SOIL WERE BASED ON THE RESULTS OF THE UNDISTURBED BORINGS, SEE BORING DATA PLATES.

SHEAR STRENGTHS BETWEEN VERTICALS WERE ASSUMED TO VARY LINEARLY BETWEEN THE VALUES INDICATED FOR THESE LOCATIONS.

NOTES

① -- STRATUM NUMBER
Ⓞ -- WEDGE NUMBER
Ⓟ -- CROSSOVER POINT
Φ -- ANGLE OF INTERNAL FRICTION, DEGREES
C -- UNIT COHESION, P.S.F.
▽ -- STATIC WATER SURFACE
D -- HORIZONTAL DRIVING FORCE IN POUNDS
R -- HORIZONTAL RESISTING FORCE IN POUNDS
A -- AS A SUBSCRIPT REFERS TO ACTIVE WEDGE
B -- AS A SUBSCRIPT REFERS TO CENTRAL BLOCK
P -- AS A SUBSCRIPT REFERS TO PASSIVE WEDGE

FACTOR OF SAFETY = $\frac{R_A + R_B + R_P}{P_A - D_B}$

C·A·D

MISSISSIPPI RIVER - GULF OUTLET
NEW LOCK AND CONNECTING CHANNELS
(INDUSTRIAL CANAL LOCK REPLACEMENT)
FEASIBILITY STUDY
LOCK EXCAVATION
SOILS STABILITY
EAST SIDE

U.S. ARMY ENGINEER DISTRICT, NEW ORLEANS
CORPS OF ENGINEERS
NEW ORLEANS, LOUISIANA

DESIGNED BY: K.J.T.		PLOT SCALE: 10	PLOT DATE: JUL 96	CAD FILE: EXC96S
DRAWN BY: K.J.T.				FILE NO. H-2-40392
CHECKED BY: K.J.T.	DATE: JUN 96			

PLATE B-95

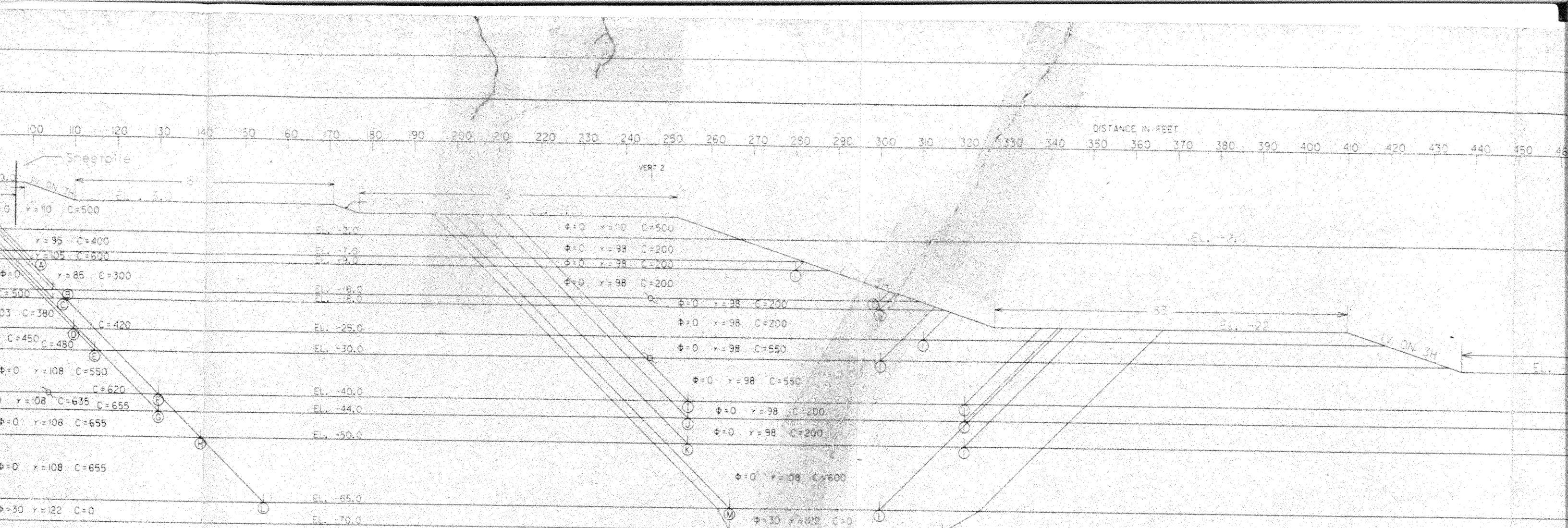

ASSUMED FAILURE SURFACE			RESISTING FORCES			DRIVING FORCES		SUMMATION OF FORCES		FACTOR OF SAFETY
NO.		ELEV.	R_A	R_B	R_P	D_A	$-D_P$	RESISTING	DRIVING	
Ⓐ	①	-9.0	15738	42832	799	16904	626	59369	15278	3.89
Ⓑ	①	-16.0	19381	45372	899	31064	6244	65652	24820	2.65
Ⓒ	①	-18.0	20838	53018	1499	35766	8332	75355	27434	2.75
Ⓓ	①	-25.0	25465	53042	2599	54855	17530	81106	37325	2.17
Ⓔ	①	-30.0	30109	97900	8599	71052	28345	136608	42707	3.20
Ⓕ	①	-40.0	42118	57622	17700	110450	51164	117440	59286	1.98
Ⓖ	①	-44.0	45548	57622	19300	130254	64004	122470	66250	1.85
Ⓗ	①	-50.0	52476	52385	21700	161195	86203	126561	74992	1.69
Ⓗ	②	-50.0	52476	108385	399	161195	72022	161260	89173	1.81
Ⓘ	①	-40.0	31680	13000	17700	92768	51164	62380	41604	1.50
Ⓘ	②	-40.0	31680	63000	1098	92768	45147	95778	47621	2.01
Ⓙ	①	-44.0	33478	13000	19300	110617	64004	65778	46613	1.41
Ⓙ	②	-44.0	33478	65000	599	110617	55177	99077	55440	1.79
Ⓚ	①	-50.0	36175	13000	21700	140342	86203	70875	54139	1.31
Ⓚ	②	-50.0	36175	69000	399	140342	72022	105574	68320	1.55
Ⓛ	①	-55.0	71518	88460	39700	257135	62283	189678	94852	2.11
Ⓛ	②	-65.0	71518	275038	5700	257135	124711	352256	132424	2.66
Ⓜ	①	-65.0	54512	21000	39700	228344	162283	115212	66061	1.74
Ⓜ	②	-65.0	54512	207578	5700	228344	124711	267790	103633	2.58
Ⓝ	①	-70.0	63655	40000	58858	263345	188085	162513	75260	2.16
Ⓝ	②	-70.0	63655	278934	8536	263345	146727	351125	116618	3.01
Ⓞ	②	-50.0	13897	10000	399	78351	72022	24296	6329	3.84
Ⓟ	②	-65.0	31897	30578	5700	144669	124711	68175	19958	3.42
Ⓠ	②	-70.0	36263	38934	8536	171333	146727	83733	24606	3.40

VERT. 1 — Stratification and Strengths Based on DM#3 - Chalmette Area Plan down to EL. -65
EL. -65 and below based on Bors. NC-1U, NC-2U & NC-3U

VERT. 2 — Stratification and Strengths Based on Bors. NC-1U, NC-2U & NC-3U

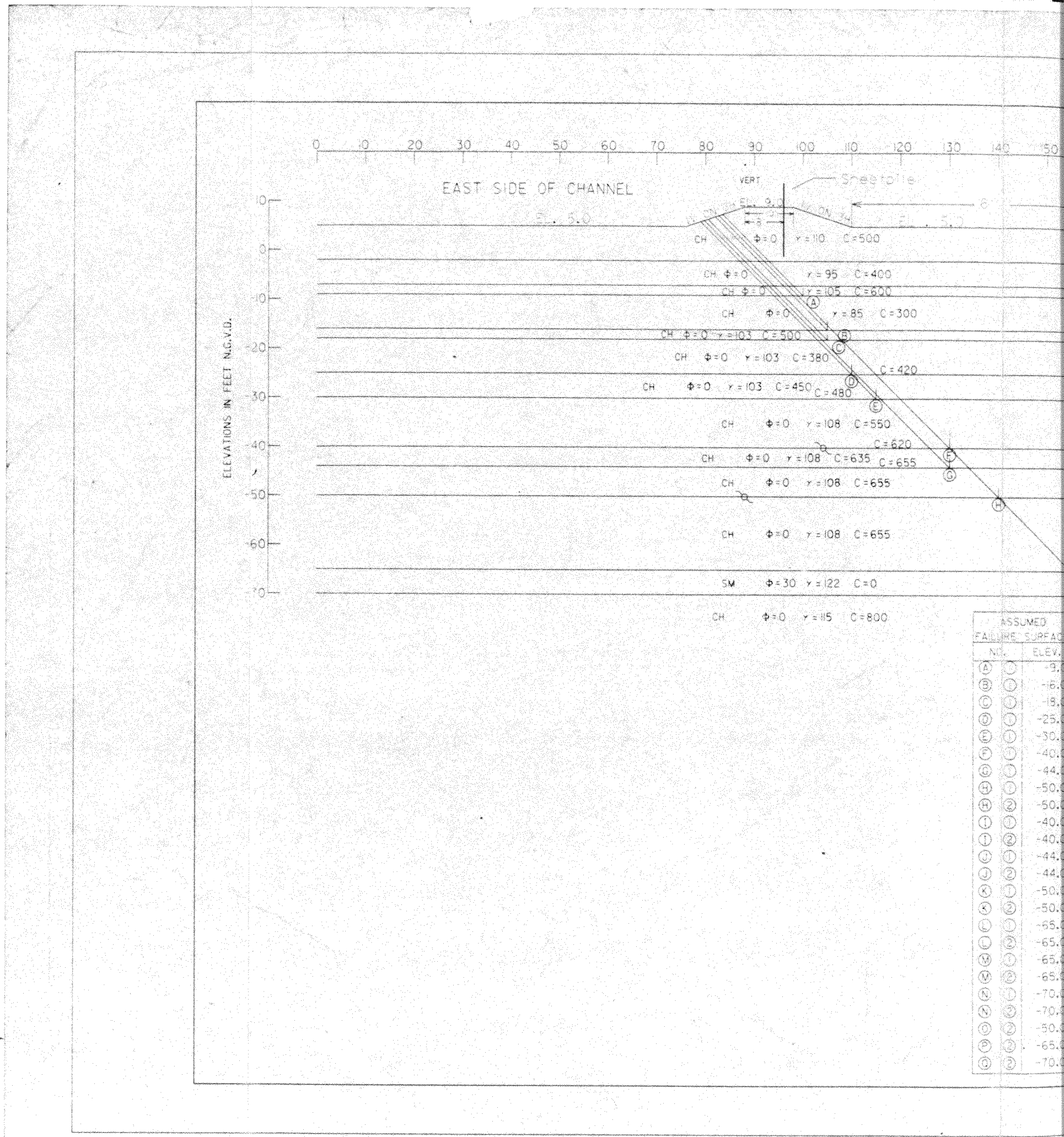

ASSUMED FAILURE SURFACE NO.		ELEV.
A	1	-9.
B	1	-16.
C	1	-19.
D	1	-25.
E	1	-30.
F	1	-40.
G	1	-44.
H	1	-50.
H	2	-50.
I	1	-40.
I	2	-40.
J	1	-44.
J	2	-44.
K	1	-50.
K	2	-50.
L	1	-65.
L	2	-65.
M	1	-65.
M	2	-65.
N	1	-70.
N	3	-70.
O	2	-50.
P	3	-65.
Q	3	-70.

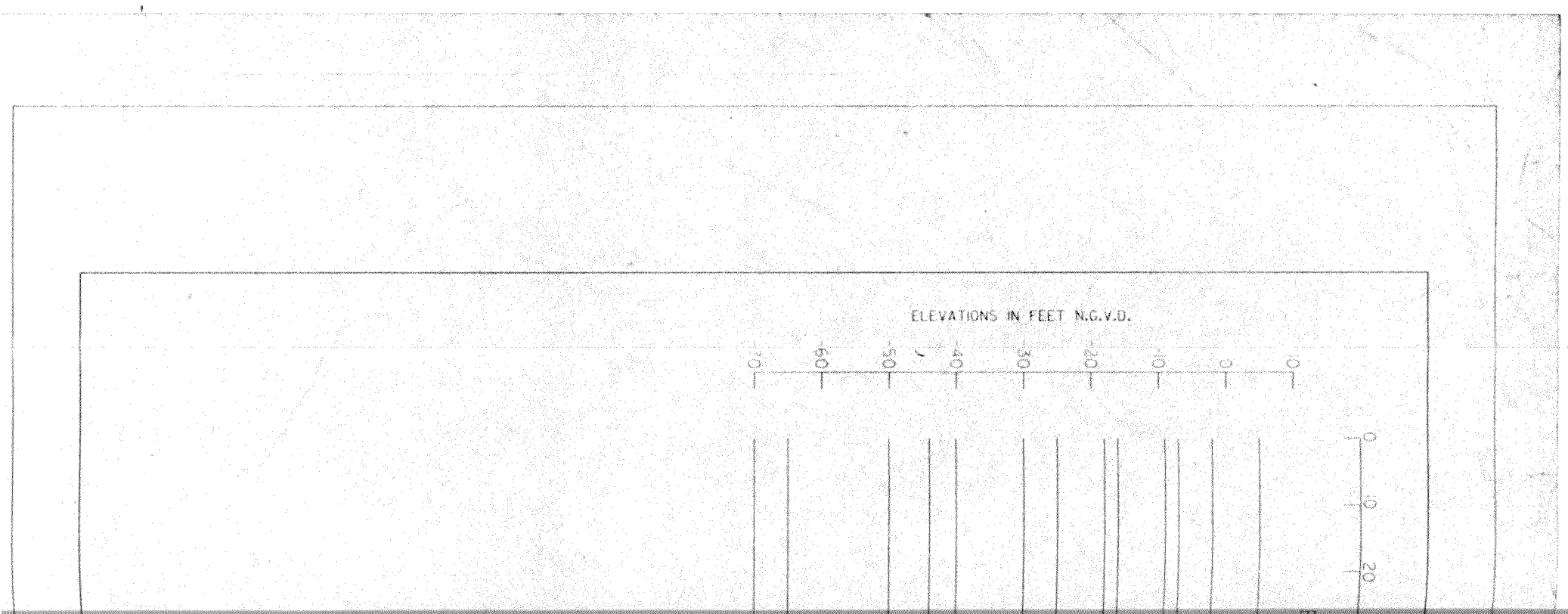
ELEVATIONS IN FEET N.G.V.D.
60
50
40
30
20
10
0
0
20

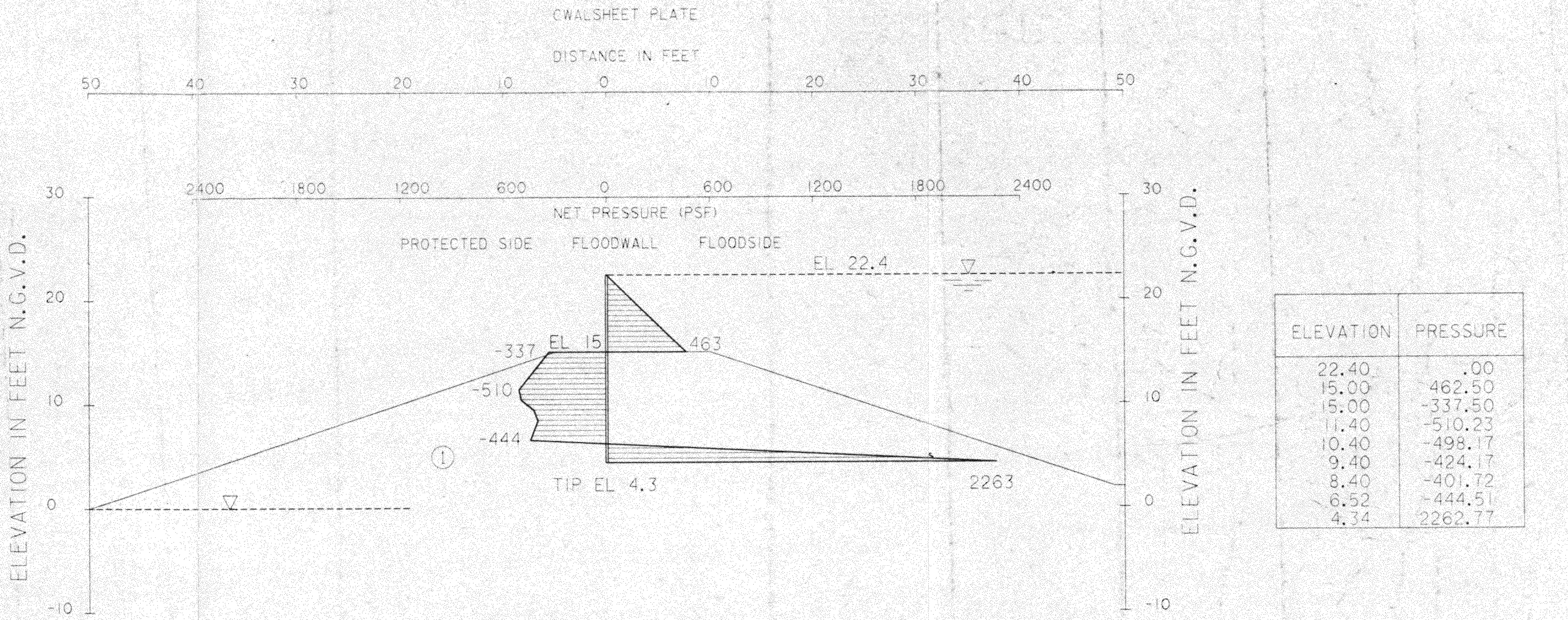

ELEVATION	PRESSURE
22.40	.00
15.00	462.50
15.00	-337.50
11.40	-510.23
10.40	-498.17
9.40	-424.17
8.40	-401.72
6.52	-444.51
4.34	2262.77

RIGHT & LEFT PROPERTIES

STRATUM NO.	SOIL TYPE	FRICTION ANGLE	TOTAL WEIGHT	AVERAGE COHESION
1	CH	0	110.0	500

Q-Case: F.S. = 1.25
Flowline + Freeboard

C·A·D

MISSISSIPPI RIVER - GULF OUTLET
NEW LOCK AND CONNECTING CHANNELS
(INDUSTRIAL CANAL LOCK REPLACEMENT)
FEASIBILITY STUDY
MAINLINE LEVEE/I-WALL
CANTILEVERED SHEETPILE STABILITY
STA. 13+05 LOCK B/L TO NEW LOCK

U.S. ARMY ENGINEER DISTRICT, NEW ORLEANS
CORPS OF ENGINEERS
NEW ORLEANS, LOUISIANA

DESIGNED BY: K.J.T.	PLOT SCALE: 10	PLOT DATE: JUN 93	CADD FILE: (HNC\50)	
DRAWN BY: K.J.T.			FILE NO.	H-2-40392
CHECKED BY: K.J.T.	DATE: JUN 93			

PLATE B-96

PSF

5000. 6000.

ING IN DIRECTION
= LOADING
8B
7B
6B
5B
4B
3B
NG CONDITION
AL LOADING
IC LOADING

KHB (PSI)

0. 200. 400. 600. 800.

ELEVATIONS IN FEET N.G.V.D.

10. 0. -10. -20. -30. -40. -50. -60. -70. -80. -90.

177.60
133.20 177.60
133.20 222.20
148.74 222.20
215.34
266.40 290.82
266.40 1015.50
355.20 1015.50
355.20

NOTES: KH = $\alpha K_1/B = (0.2222 q_u/B)(C)(D)$ COHESIVE
α = 0.4 = Factor of material properties of soil and pile
k_1 = Modulue of subgrade reaction for test plate (pci)
B_1 = Width or diameter of test plate (in)
$K_1 = k_1 B_1 = 80 q_u(pcf) = 0.5556 q_u(psi)$
$q_u = 2c$ = Unconfined compressive strength (psf)
C = Reduction for cyclic loading-not applicable
D = Group effect reduction factor
B = Width of pile measured at right angles to the direction of displacement (in)
KH = (nh)(Z/B)(C)(D) COHESIONLESS
nh = Coeficient of horizontal subgrade reaction (pci)
Z = Depth below equivalent ground surface (in)

LOAD (TONS)

0. 10. 20. 30. 40. 50. 60. 70. 80. 90. 100. 110. 120. 130. 140. 150.

ELEVATIONS IN FEET N.G.V.D.

10. -10. -30. -50. -70. -90.

ULTIMATE CAPACITY
SQUARE CONCRETE PILE
DIMENSION: 14-IN. SIDE

COMPRESSION (S.F.=1.0)
$K_C = 1.00$

ULTIMATE CAPACITY
SQUARE CONCRETE PILE
DIMENSION: 14-IN. SIDE

TENSION (S.F.=1.0)
$K_T = 0.70$

THE FACTOR SHOWN, (MODULUS OF HORIZONTAL SUBGRADE K_h, TIMES THE PILE WIDTH IN INCHES (B), MEASURED AT RIGHT ANGLES TO THE DIRECTION OF DISPLACEMENT) MUST BE MODIFIED BY A REDUCTION FACTOR FOR THE EFFECT OF GROUP ACTION (D) AND A REDUCTION FACTOR FOR CYCLIC LOADING (C). EX: $K_H = \frac{0.2222 q_u (C)(D)}{(B)}$

- - - - - S-CASE
——— Q-CASE

USE A FACTOR OF SAFETY OF 3.0 IF NO PILE TESTS ARE PERFORMED
USE A FACTOR OF SAFETY OF 2.0 IF PILE TESTS ARE PERFORMED

MISSISSIPPI RIVER - GULF OUTLET
NEW LOCK AND CONNECTING CHANNELS
(INDUSTRIAL CANAL LOCK REPLACEMENT)
FEASIBILITY STUDY
ULTIMATE PILE CAPACITY
14-INCH CONCRETE PILE

U.S. ARMY ENGINEER DISTRICT, NEW ORLEANS
CORPS OF ENGINEERS
NEW ORLEANS, LOUISIANA

DESIGNED BY: K.J.T.	PLOT SCALE: 10	PLOT DATE: JUN. '96	LOGFILE:	FINDTAG:
DRAWN BY: K.J.T.			FILE NO.	H-2-40392
CHECKED BY: K.J.T.	DATE: JUN. 96			

PLATE 97

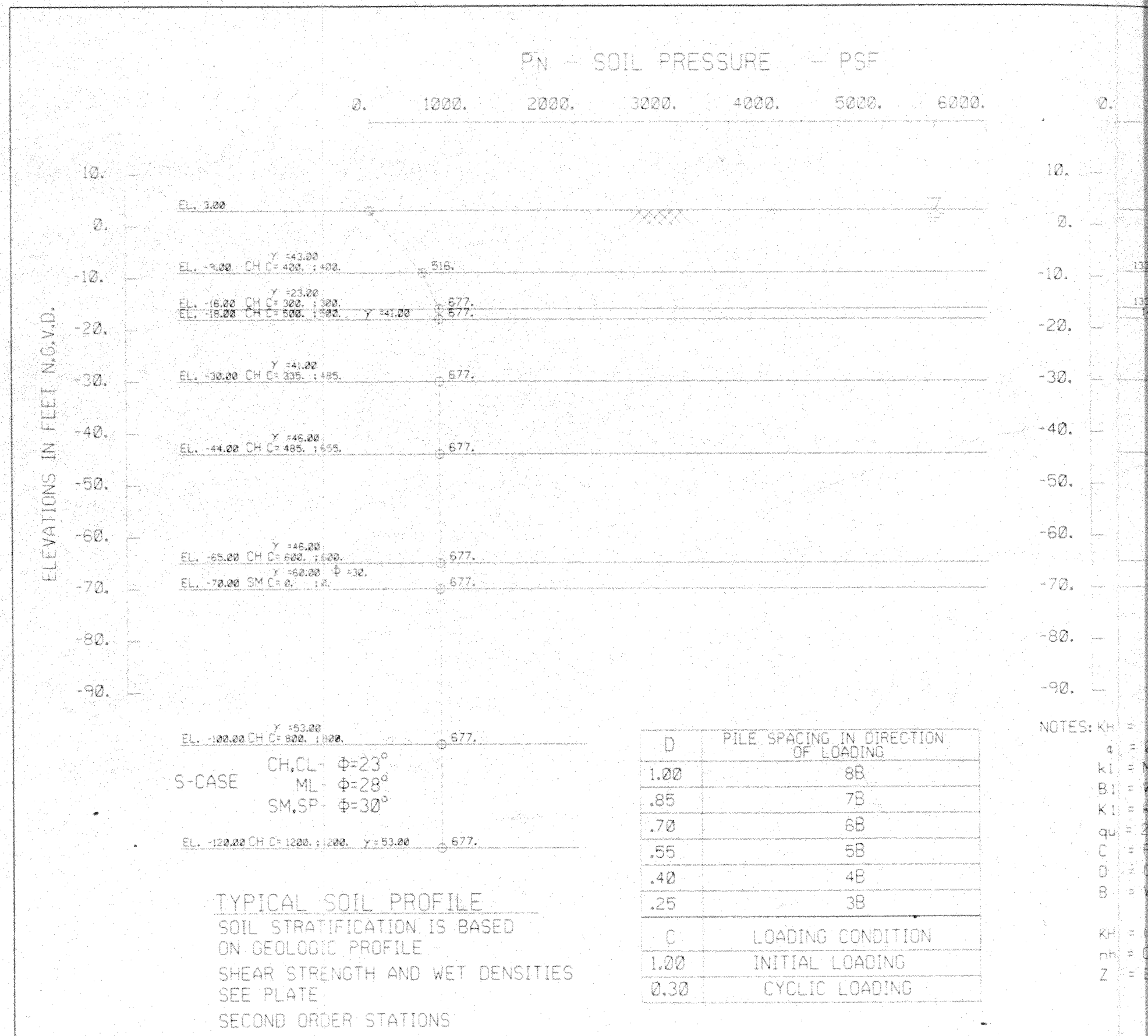

TYPICAL SOIL PROFILE

SOIL STRATIFICATION IS BASED ON GEOLOGIC PROFILE

SHEAR STRENGTH AND WET DENSITIES SEE PLATE

SECOND ORDER STATIONS

D	PILE SPACING IN DIRECTION OF LOADING
1.00	8B
.85	7B
.70	6B
.55	5B
.40	4B
.25	3B

C	LOADING CONDITION
1.00	INITIAL LOADING
0.30	CYCLIC LOADING

NOTES: KH =
a =
k1 =
B1 =
K1 =
qu =
C =
D =
B =
KH =
nh =
Z =

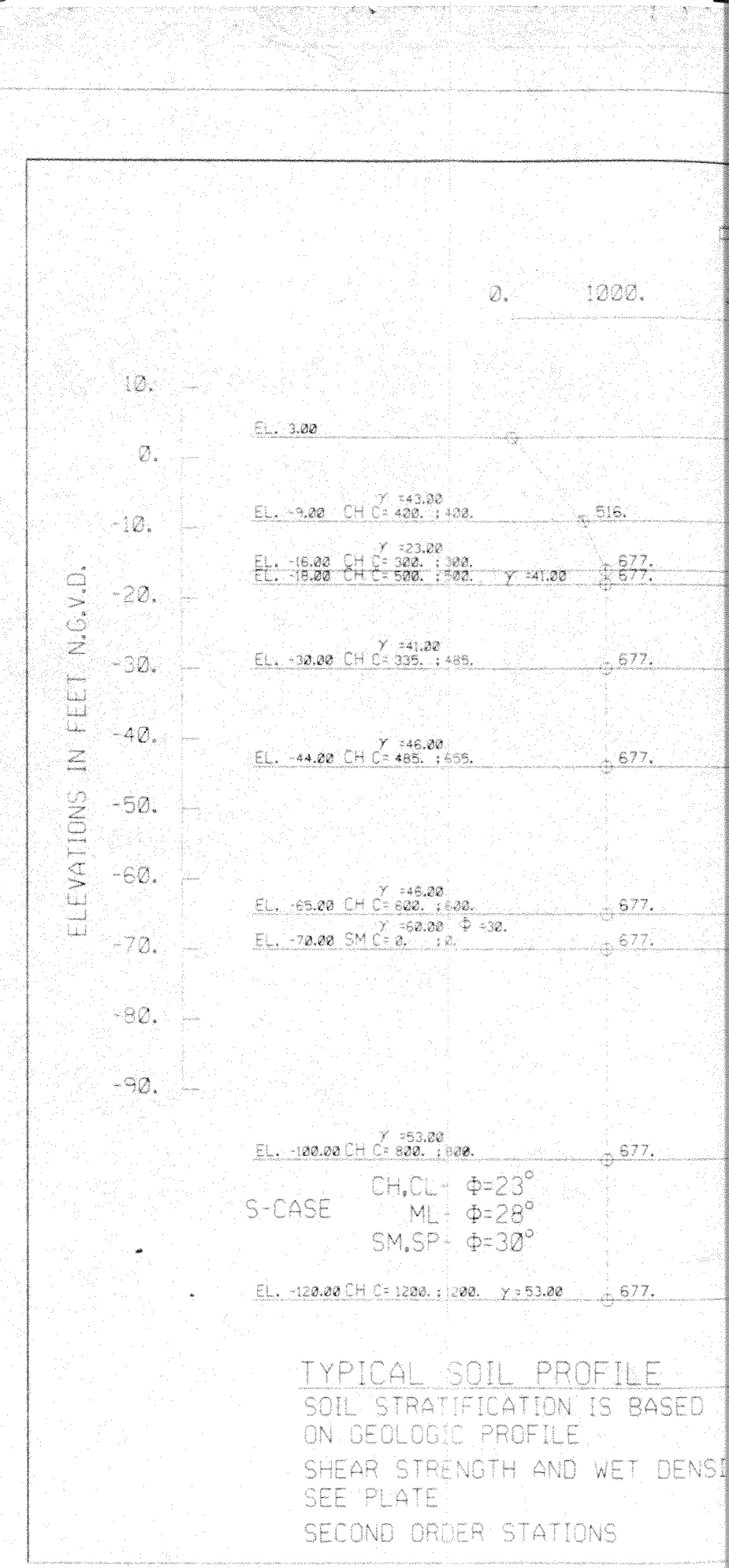
0.
1000.
10.
0.
-10.
-20.
-30.
-40.
-50.
-60.
-70.
-80.
-90.
ELEVATIONS IN FEET N.G.V.D.
EL. 3.00
EL. -9.00 CH C= 400. ; 400. Y =43.00 516.
EL. -16.00 CH C= 300. ; 300. Y =23.00 677.
EL. -18.00 CH C= 500. ; 500. Y =41.00 677.
EL. -30.00 CH C= 335. ; 485. Y =41.00 677.
EL. -44.00 CH C= 485. ; 655. Y =46.00 677.
EL. -65.00 CH C= 800. ; 800. Y =46.00 677.
EL. -70.00 SM C= 0. ; 0. Y =60.00 Φ =30. 677.
EL. -100.00 CH C= 800. ; 800. Y =53.00 677.
S-CASE
CH,CL - Φ=23°
ML - Φ=28°
SM,SP - Φ=30°
EL. -120.00 CH C= 1200. ; 1200. Y =53.00 677.
TYPICAL SOIL PROFILE
SOIL STRATIFICATION IS BASED
ON GEOLOGIC PROFILE
SHEAR STRENGTH AND WET DENSI
SEE PLATE
SECOND ORDER STATIONS

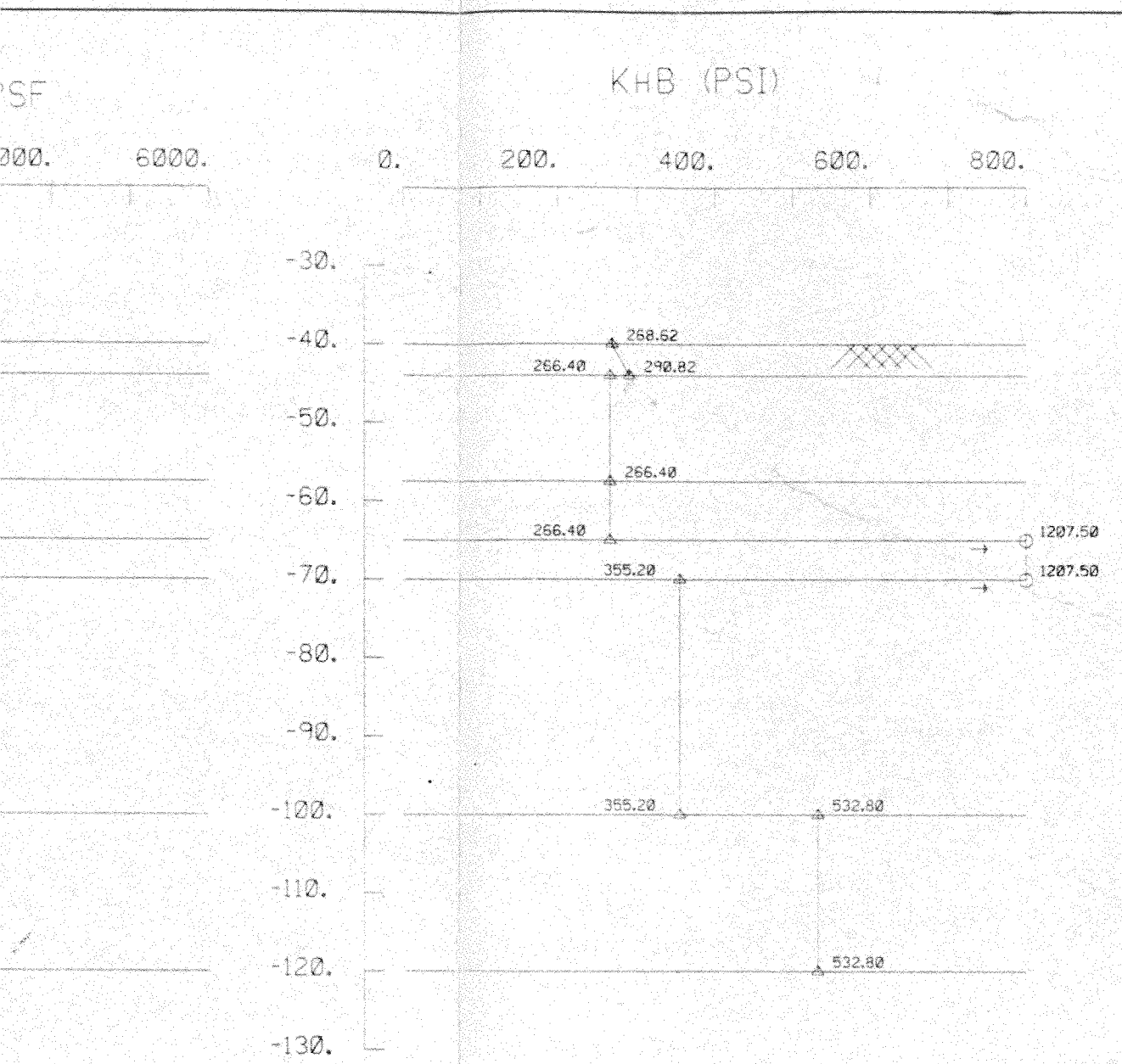

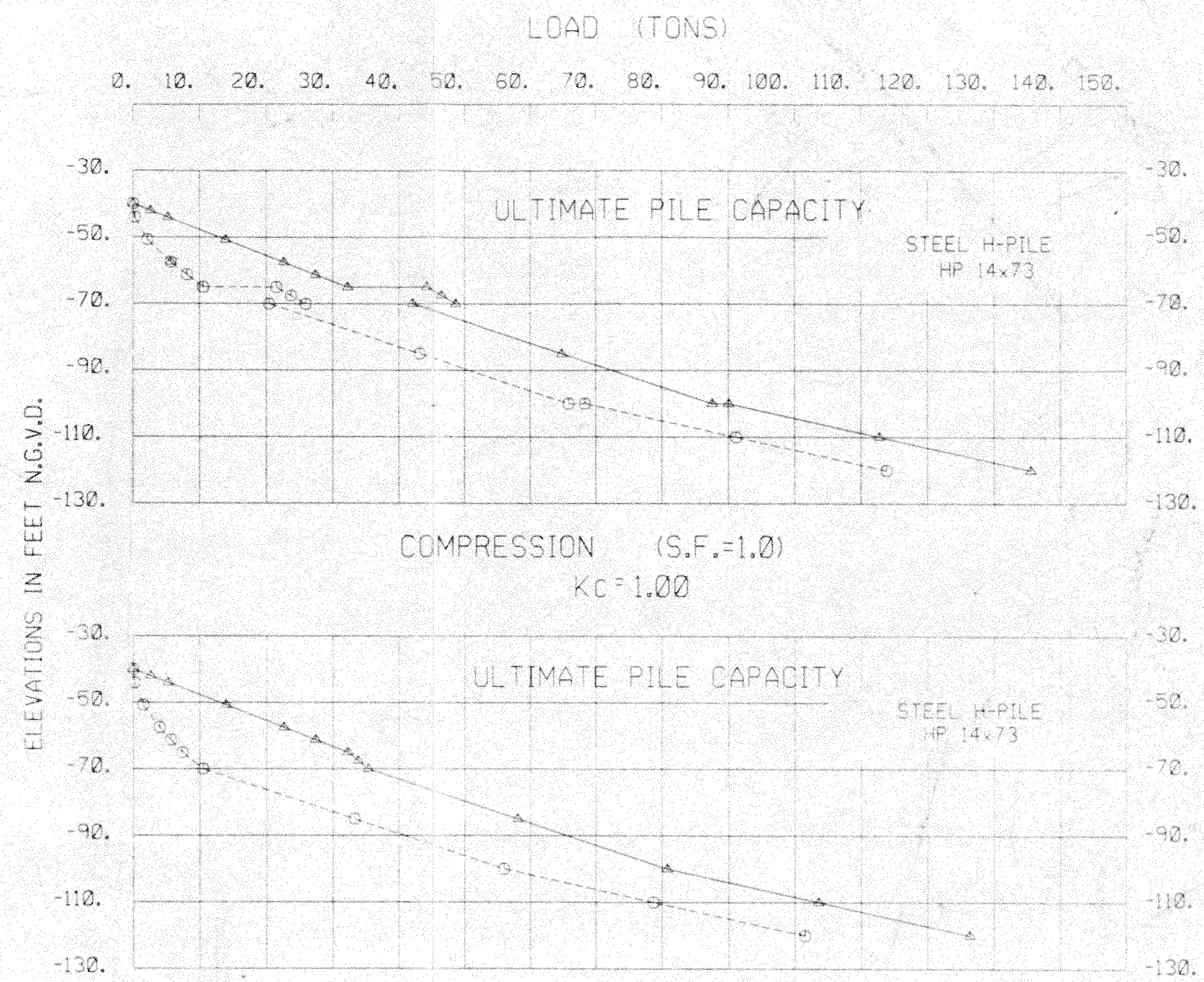

DIRECTION
DING
B
B
B
B
B
B
ONDITION
ADING
OADING

NOTES: KH = αK1/B=(0.2222qu/B)(C)(D) COHESIVE
α = 0.4 = Factor of material properties of soil and pile
k1 = Modulue of subgrade reaction for test plate (pci)
B1 = Width or diameter of test plate (in)
K1 = k1B1 = 80qu(pcf) = 0.5556qu(psi)
qu = 2 c = Unconfined compressive strength (psf)
C = Reduction for cyclic loading-not applicable
D = Group effect.reduction factor
B = Width of pile measured at right angles to the direction of displacement (in)
KH = (nh)(Z/B)(C)(D) COHESIONLESS
nh = Coeficient of horizontal subgrade reaction (pci)
Z = Depth below equivalent ground surface (in)

THE FACTOR SHOWN, (MODULUS OF HORIZONTAL SUBGRADE Kh, TIMES THE PILE WIDTH IN INCHES (B), MEASURED AT RIGHT ANGLES TO THE DIRECTION OF DISPLACEMENT) MUST BE MODIFIED BY A REDUCTION FACTOR FOR THE EFFECT OF GROUP ACTION (D) AND A REDUCTION FACTOR FOR CYCLIC LOADING (C) EX: $K_h = \frac{0.2222qu(C)(D)}{(B)}$

- - - - - S-CASE
——— Q-CASE

USE A FACTOR OF SAFETY OF 3.0 IF NO PILE TESTS ARE PERFORMED

USE A FACTOR OF SAFETY OF 2.0 IF PILE TESTS ARE PERFORMED

MISSISSIPPI RIVER - GULF OUTLET
NEW LOCK AND CONNECTING CHANNELS
(INDUSTRIAL CANAL LOCK REPLACEMENT)
FEASIBILITY STUDY
ULTIMATE PILE CAPACITY
14-INCH STEEL PILE

U.S. ARMY ENGINEER DISTRICT, NEW ORLEANS
CORPS OF ENGINEERS
NEW ORLEANS, LOUISIANA

DESIGNED BY: K.J.T.	PLOT SCALE: 10	PLOT DATE: JUN 96	CADD FILE: INNCHS
DRAWN BY: K.J.T.			FILE NO. H-2-40392
CHECKED BY: K.J.T.	DATE: JUN 96		

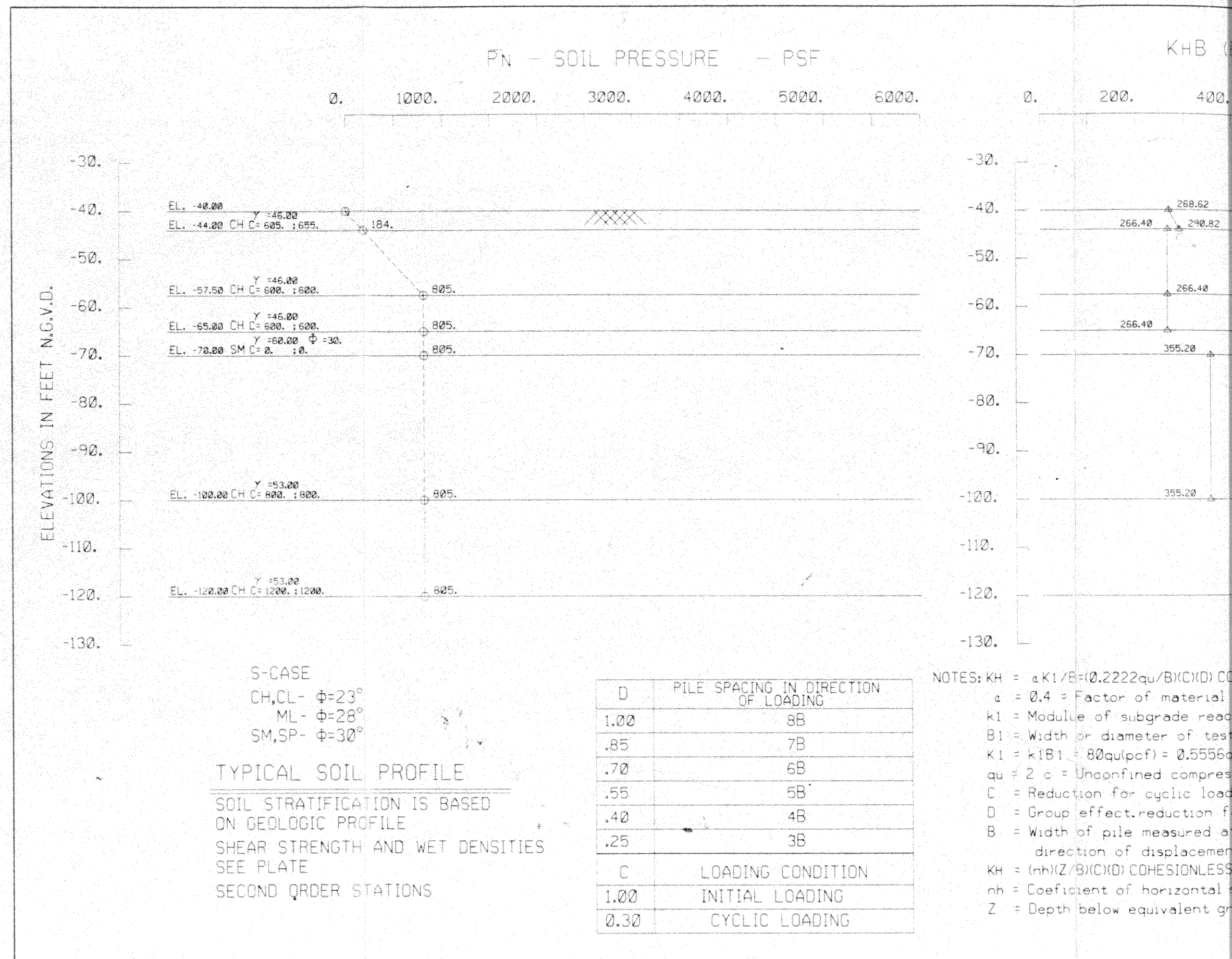

S-CASE

CH,CL- Φ=23°

ML- Φ=28°

SM,SP- Φ=30°

TYPICAL SOIL PROFILE

SOIL STRATIFICATION IS BASED ON GEOLOGIC PROFILE

SHEAR STRENGTH AND WET DENSITIES SEE PLATE

SECOND ORDER STATIONS

D	PILE SPACING IN DIRECTION OF LOADING
1.00	8B
.85	7B
.70	6B
.55	5B
.40	4B
.25	3B

C	LOADING CONDITION
1.00	INITIAL LOADING
0.30	CYCLIC LOADING

NOTES: KH = αK1/B=(0.2222qu/B)(C)(D) CO

α = 0.4 = Factor of material

k1 = Modulus of subgrade reac

B1 = Width or diameter of test

K1 = kIB1 = 80qu(pcf) = 0.5556c

qu = 2 c = Unconfined compres

C = Reduction for cyclic load

D = Group effect.reduction f

B = Width of pile measured a direction of displacemen

KH = (nh)(Z/B)(C)(D) COHESIONLESS

nh = Coeficient of horizontal

Z = Depth below equivalent gr

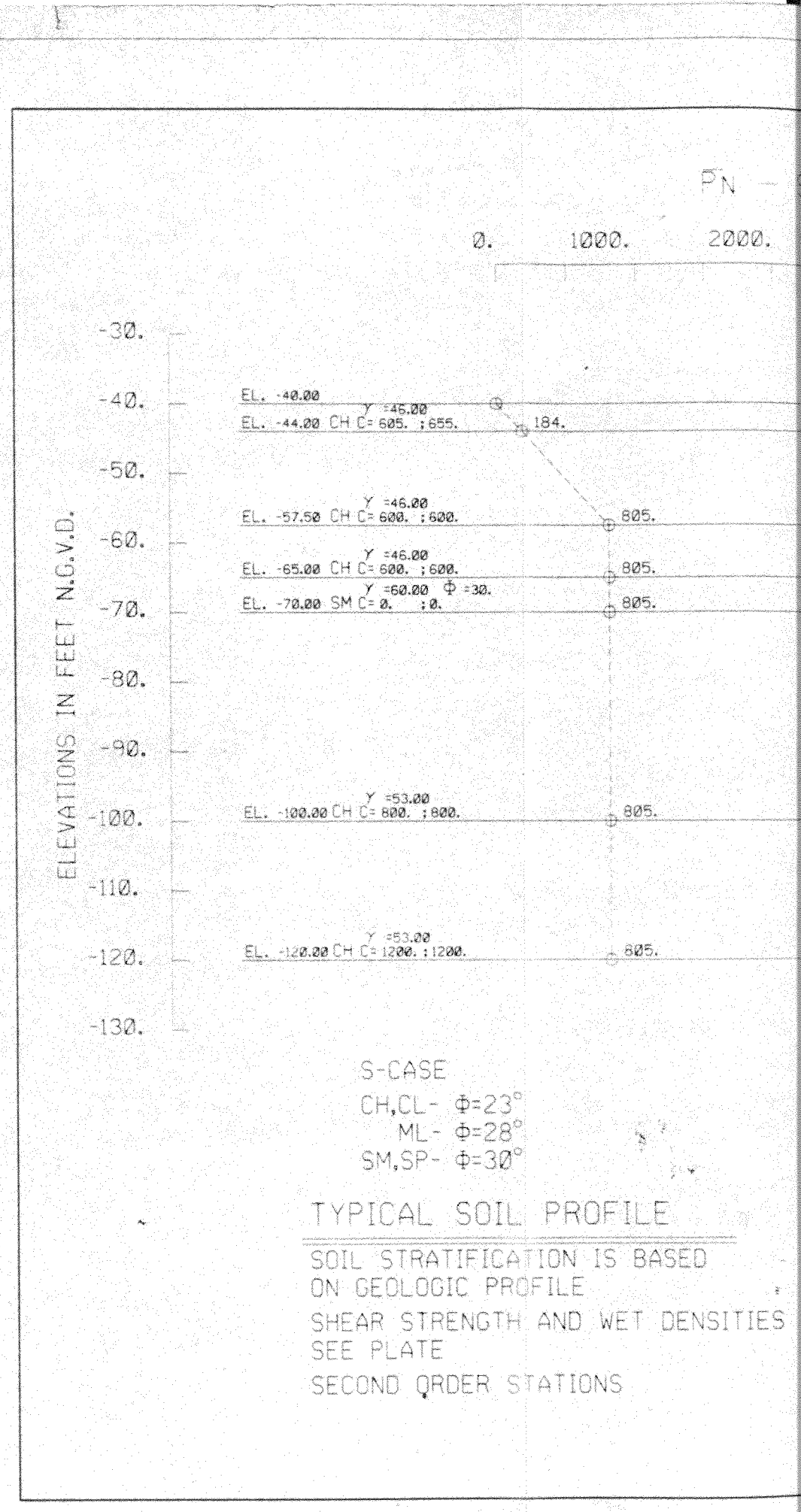
PN
0.
1000.
2000.
-30.
-40.
-50.
-60.
-70.
-80.
-90.
-100.
-110.
-120.
-130.
ELEVATIONS IN FEET N.C.V.D.
EL. -40.00
EL. -44.00 CH C= 605. ; 655.
Y =45.00
184.
Y =46.00
EL. -57.50 CH C= 600. ; 600.
805.
Y =46.00
EL. -65.00 CH C= 600. ; 600.
805.
Y =60.00 Φ =30.
EL. -70.00 SM C= 0. ; 0.
805.
Y =53.00
EL. -100.00 CH C= 800. ; 800.
805.
Y =53.00
EL. -120.00 CH C= 1200. ; 1200.
805.
S-CASE
CH,CL- Φ=23°
ML- Φ=28°
SM,SP- Φ=30°
TYPICAL SOIL PROFILE
SOIL STRATIFICATION IS BASED ON GEOLOGIC PROFILE
SHEAR STRENGTH AND WET DENSITIES SEE PLATE
SECOND ORDER STATIONS

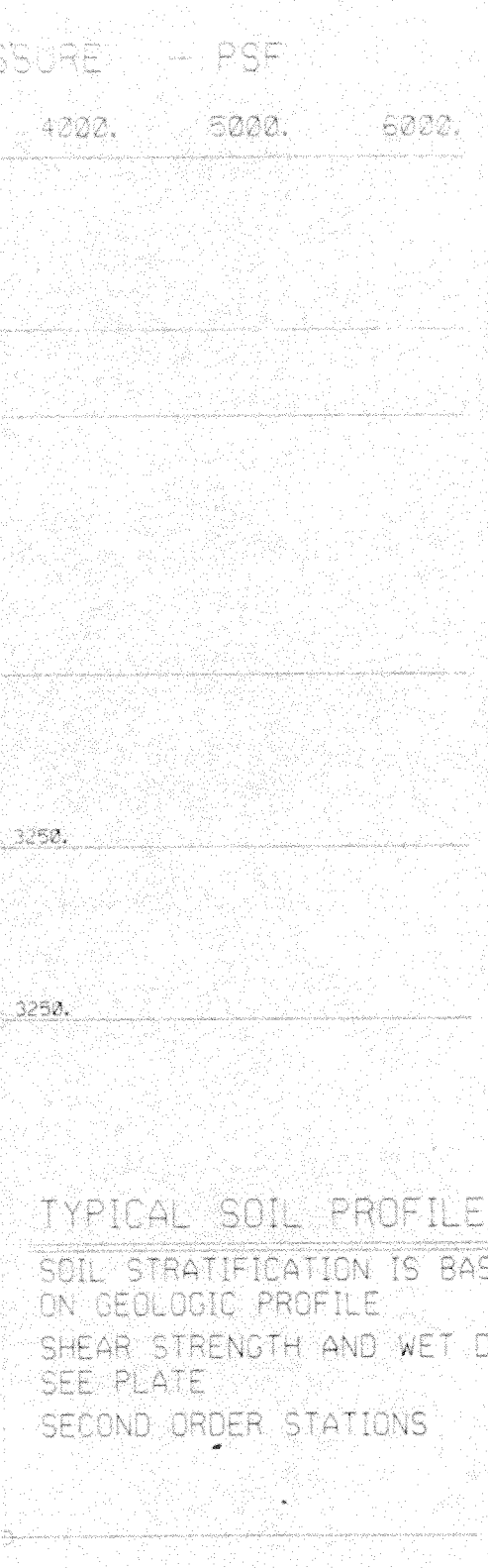

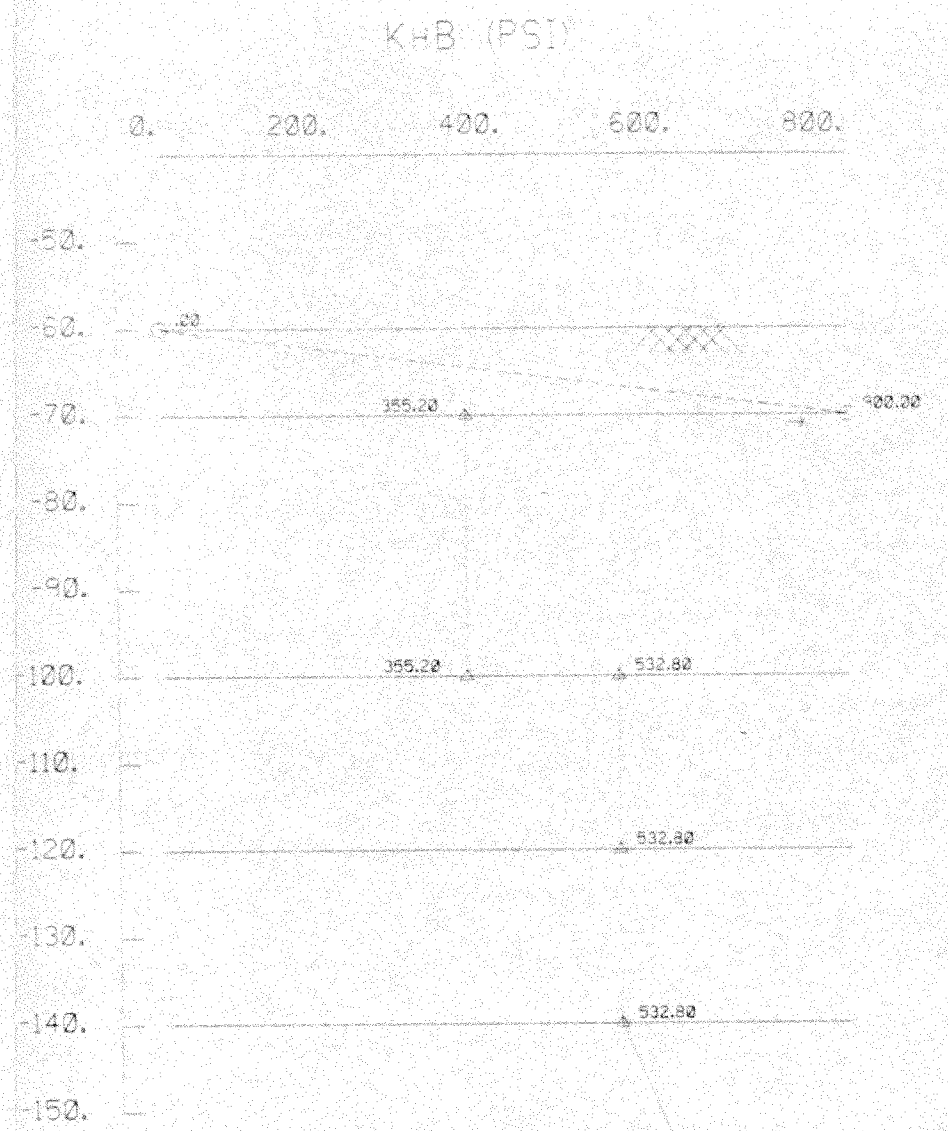

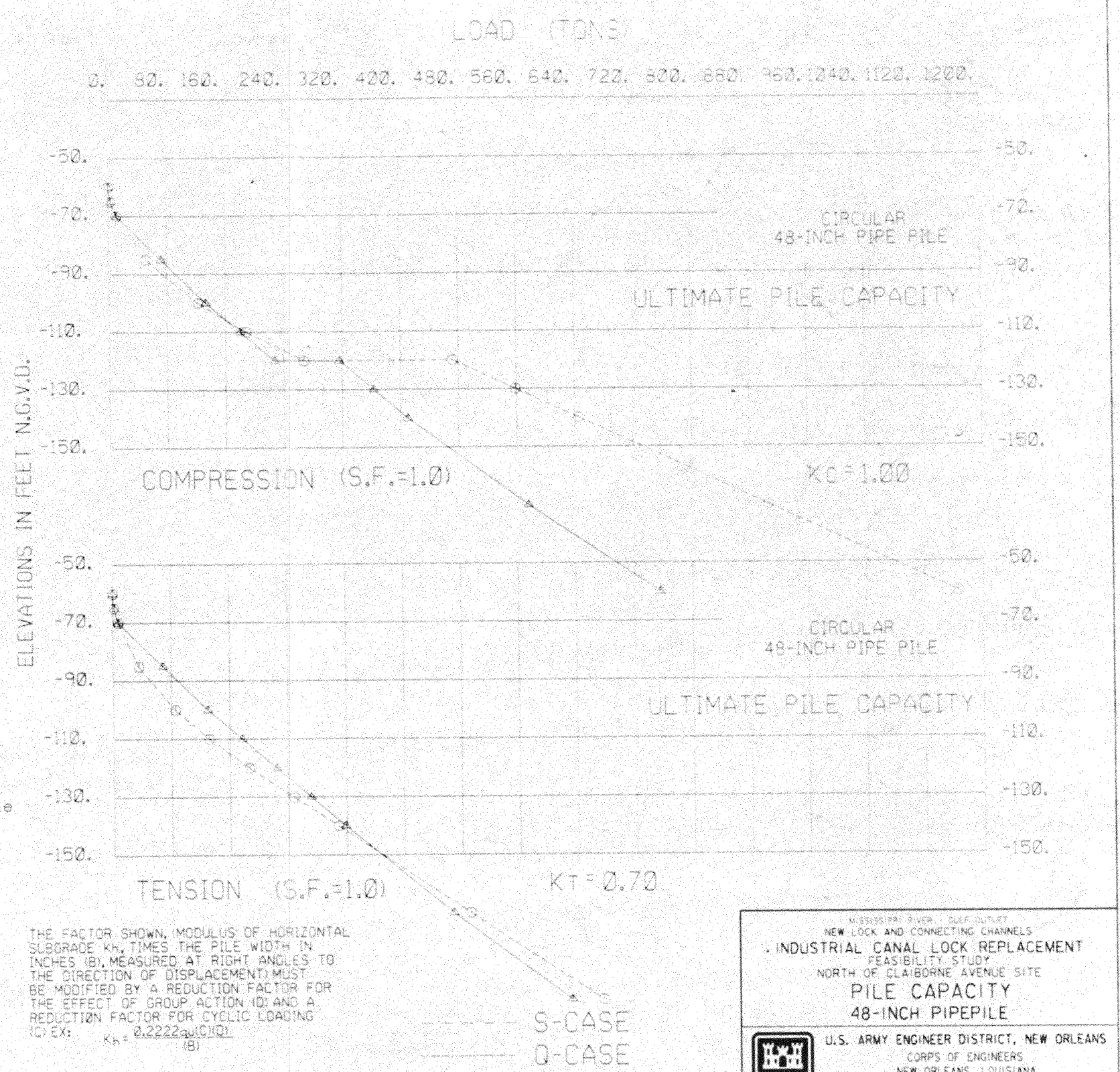

TYPICAL SOIL PROFILE

SOIL STRATIFICATION IS BASED ON GEOLOGIC PROFILE

SHEAR STRENGTH AND WET DENSITIES SEE PLATE

SECOND ORDER STATIONS

NOTES: KH = αK1/B=(0.2222qu/B)(C)(D) COHESIVE

α = 0.4 = Factor of material properties of soil and pile

k1 = Modulue of subgrade reaction for test plate (pci)

B1 = Width or diameter of test plate (in)

K1 = k1B1 = 80qu(pcf) = 0.5556qu(psi)

qu = 2 c = Unconfined compressive strength (psf)

C = Reduction for cyclic loading-not applicable

D = Group effect reduction factor

B = Width of pile measured at right angles to the direction of displacement (in)

KH = (nh)(Z/B)(C)(D) COHESIONLESS

nh = Coeficient of horizontal subgrade reaction (pci)

Z = Depth below equivalent ground surface (in)

THE FACTOR SHOWN, (MODULUS OF HORIZONTAL SUBGRADE Kh, TIMES THE PILE WIDTH IN INCHES (B), MEASURED AT RIGHT ANGLES TO THE DIRECTION OF DISPLACEMENT) MUST BE MODIFIED BY A REDUCTION FACTOR FOR THE EFFECT OF GROUP ACTION (D) AND A REDUCTION FACTOR FOR CYCLIC LOADING (C) EX: $K_h = \frac{0.2222 q_u (C)(D)}{(B)}$

A F.S. = 3.0 is Recommended If No Pile Test Are Performed With Pile Test Results, A F.S. = 2.0 is Recommended

MISSISSIPPI RIVER - GULF OUTLET
NEW LOCK AND CONNECTING CHANNELS
INDUSTRIAL CANAL LOCK REPLACEMENT
FEASIBILITY STUDY
NORTH OF CLAIBORNE AVENUE SITE

PILE CAPACITY
48-INCH PIPEPILE

U.S. ARMY ENGINEER DISTRICT, NEW ORLEANS
CORPS OF ENGINEERS
NEW ORLEANS, LOUISIANA

DESIGNED BY: KJT	PLOT SCALE: 10	PLOT DATE: JULY 96	CADD FILE: RP48P
DRAWN BY: KJT			FILE NO.
CHECKED BY: KJT	DATE: JUL 96		H-2-40392

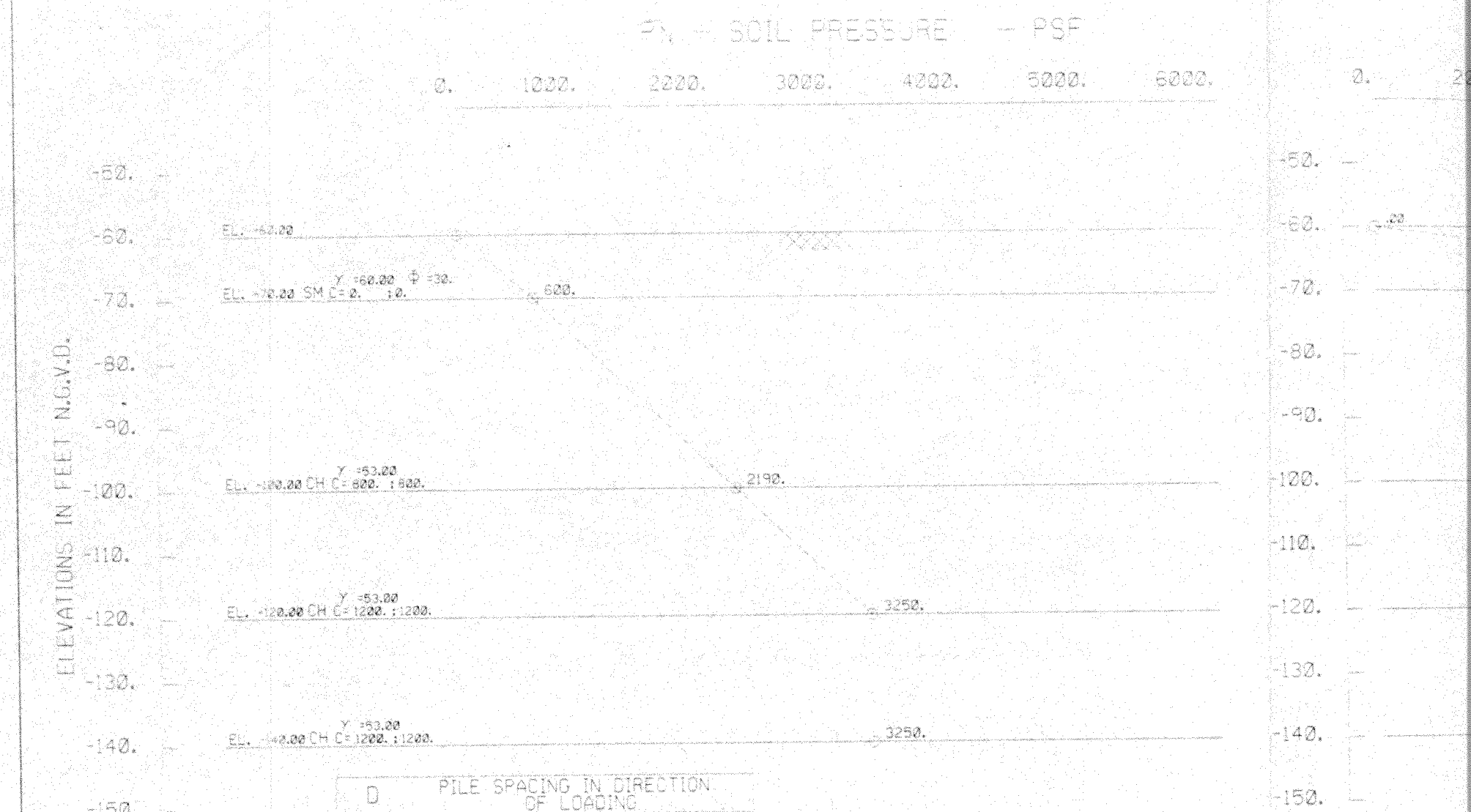

D	PILE SPACING IN DIRECTION OF LOADING
1.00	8B
.85	7B
.70	6B
.55	5B
.40	4B
.25	3B

C	LOADING CONDITION
1.00	INITIAL LOADING
0.30	CYCLIC LOADING

S-CASE
CH,CL- Φ=23°
ML- Φ=28°
SM,SP- Φ=30°

CH

γ = 53.00
EL. -200 C=1200 ;1800.

TYPICAL SOIL PROFILE

SOIL STRATIFICATION IS BASED ON GEOLOGIC PROFILE

SHEAR STRENGTH AND WET DENSITIES SEE PLATE

SECOND ORDER STATIONS

NOTES: KH = αK1/
α = 0.4 =
k1 = Modul
B1 = Width
K1 = k1B1
qu = 2 c =
C = Reduc
D = Group
B = Width
dire
KH = (nh)(Z
nh = Coefi
Z = Depth

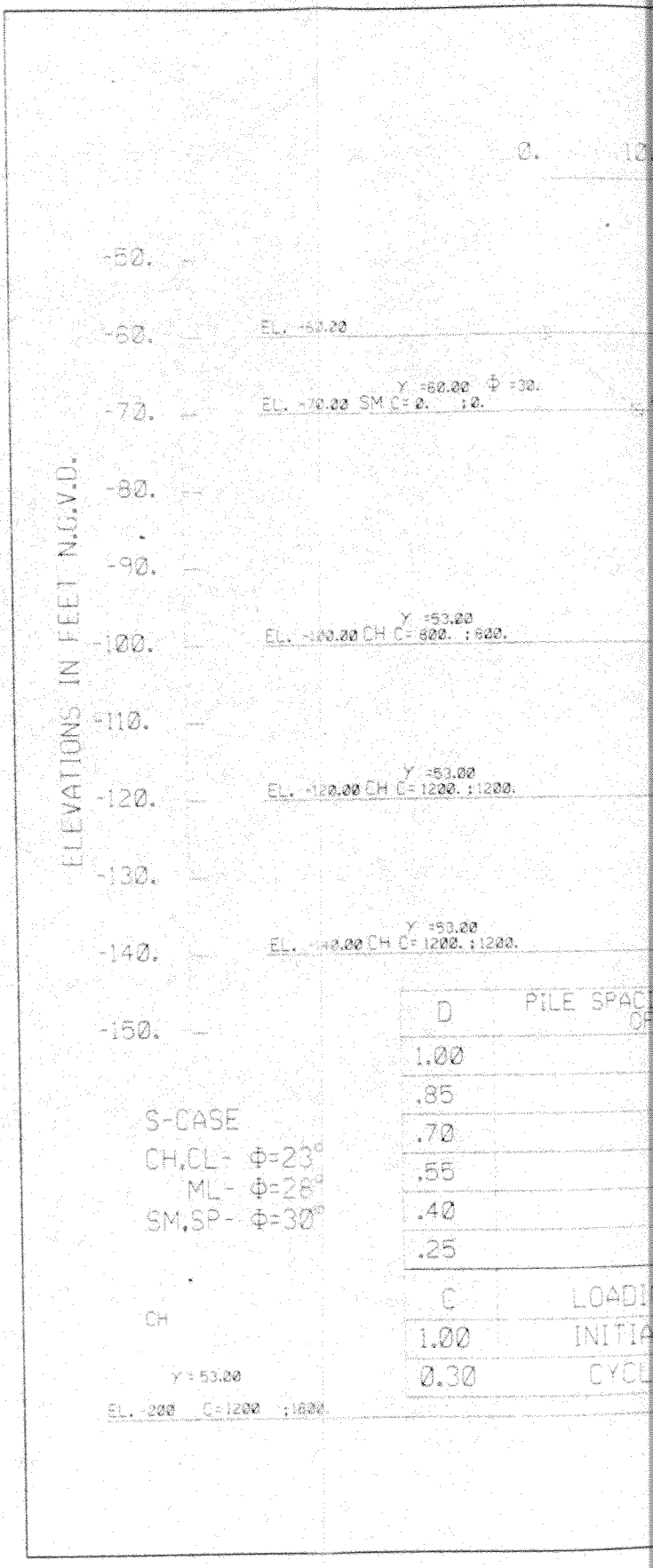
0.
-50.
-60.
-70.
-80.
-90.
-100.
-110.
-120.
-130.
-140.
-150.
ELEVATIONS IN FEET N.G.V.D.
EL. -60.00
EL. -70.00 SM C= 0. ; 0.
Y =60.00 Φ =30.
EL. -100.00 CH C= 800. ; 800.
Y =53.00
EL. -120.00 CH C=1200. ;1200.
Y =53.00
EL. -140.00 CH C=1200. ;1200.
S-CASE
CH,CL- Φ=23°
ML- Φ=28°
SM,SP- Φ=30°
CH
Y = 53.00
EL. -200 C=1200 ;1600.
D
PILE SPACI
OF
1.00
.85
.70
.55
.40
.25
C
LOADI
1.00
INITIA
0.30
CYCL

ESSURE - PSF

4000. 5000. 6000.

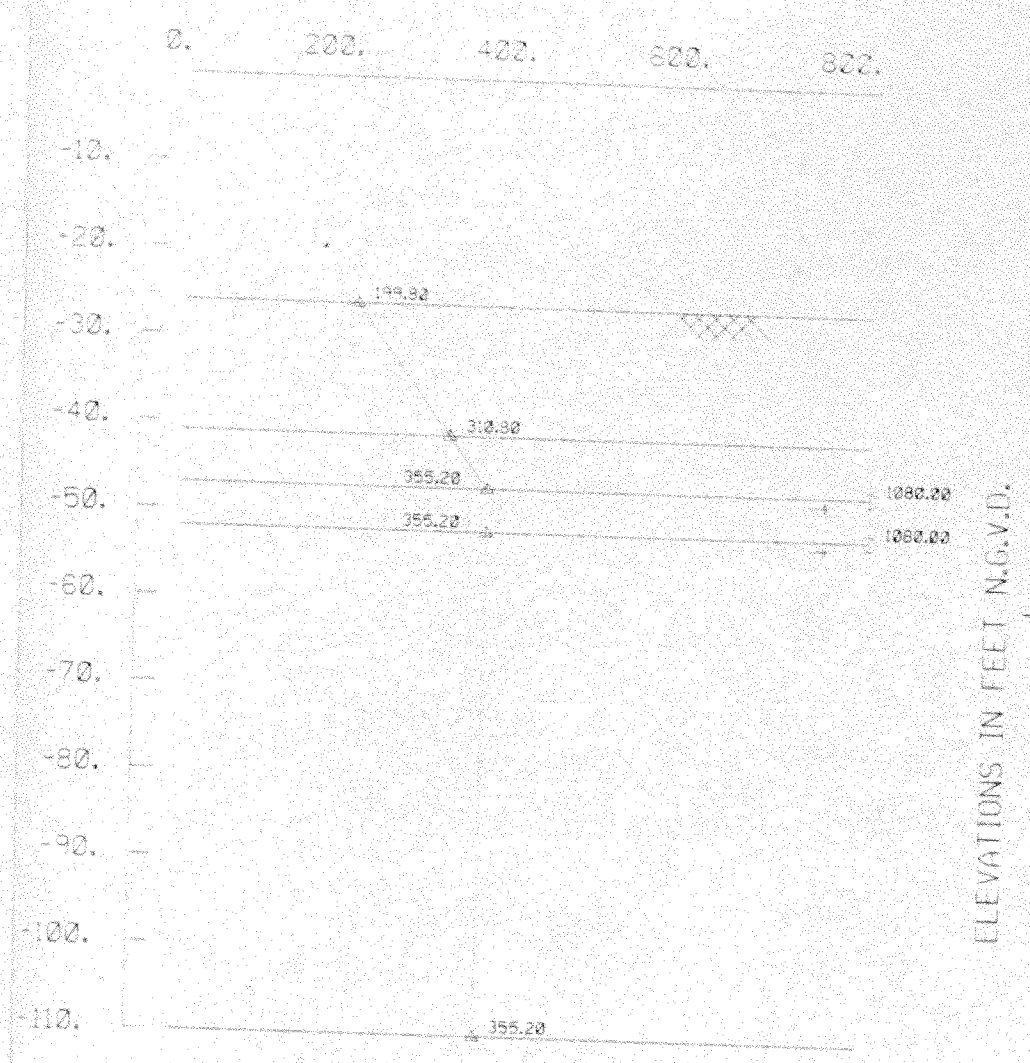

PILE SPACING IN DIRECTION OF LOADING
8B
7B
6B
5B
4B
3B

LOADING CONDITION
INITIAL LOADING
CYCLIC LOADING

NOTES: KH = αK1/B=(0.2222qu/B)(C)(D) COHESIVE
- α = 0.4 = Factor of material properties of soil and pile
- k1 = Modulue of subgrade reaction for test plate (pci)
- B1 = Width or diameter of test plate (in)
- K1 = k1B1 = 80qu(pcf) = 0.5556qu(psi)
- qu = 2 c = Unconfined compressive strength (psf)
- C = Reduction for cyclic loading-not applicable
- D = Group effect reduction factor
- B = Width of pile measured at right angles to the direction of displacement (in)
- KH = (nh)(Z/B)(C)(D) COHESIONLESS
- nh = Coeficient of horizontal subgrade reaction (pci)
- Z = Depth below equivalent ground surface (in)

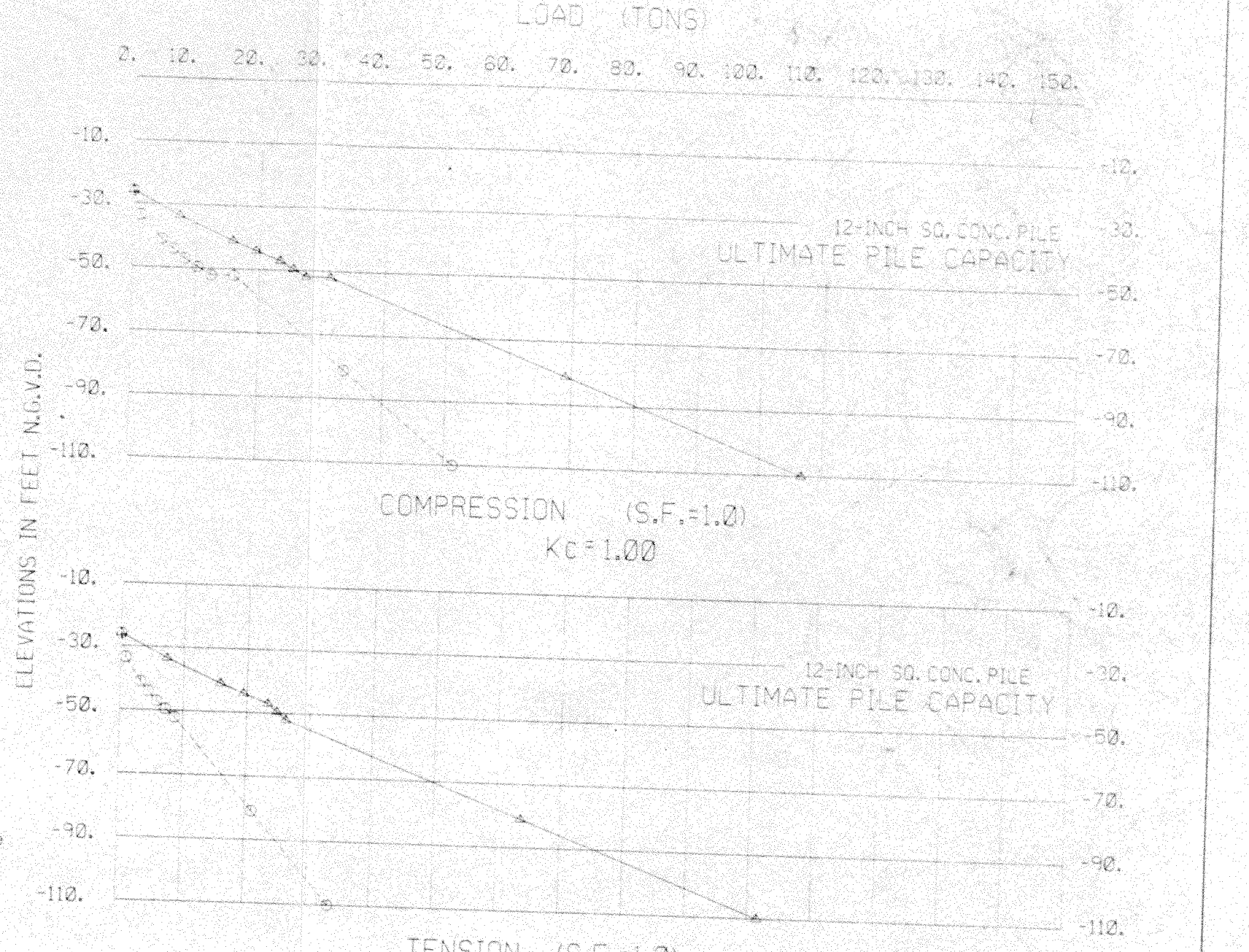

THE FACTOR SHOWN, (MODULUS OF HORIZONTAL SUBGRADE Kh, TIMES THE PILE WIDTH IN INCHES (B), MEASURED AT RIGHT ANGLES TO THE DIRECTION OF DISPLACEMENT) MUST BE MODIFIED BY A REDUCTION FACTOR FOR THE EFFECT OF GROUP ACTION (D) AND A REDUCTION FACTOR FOR CYCLIC LOADING (C) EX: $K_h = \frac{0.2222 q_u (C)(D)}{(B)}$

A F.S. = 3.0 is Recommended If No Pile Test Are Performed
With Pile Test Results, A F.S. = 2.0 is Recommended

MISSISSIPPI RIVER - GULF OUTLET
NEW LOCK AND CONNECTING CHANNELS
INDUSTRIAL CANAL LOCK REPLACEMENT
FEASIBILITY STUDY
NORTH OF CLAIBORNE AVENUE SITE
PILE CAPACITY
GRAVING SITE - 12-INCH SQ. CONC. PILE

U.S. ARMY ENGINEER DISTRICT, NEW ORLEANS
CORPS OF ENGINEERS
NEW ORLEANS, LOUISIANA

DESIGNED BY: KJT	PLOT SCALE:	PLOT DATE:	TASK ITEM:
DRAWN BY: KJT	1.0	JUL 96	FILE NO.
CHECKED BY: KJT	DATE: JULY 1996		H-2-40392

PLATE B-99A

FN — SOIL PRESSURE — PSF

0. 1000. 2000. 3000. 4000. 5000. 6000.

ELEVATIONS IN FEET N.G.V.D.

-10. -20. -30. -40. -50. -60. -70. -80. -90. -100. -110.

EL. -26.00

EL. -41.00 CH Y =48.00 C= 450. : 700. 720.

EL. -47.00 CH Y =48.00 C= 700. : 800. 720.

EL. -52.00 SM Y =60.00 Φ =30. C= 0. : 0. 720.

EL. -110.00 CH Y =58.00 C= 800. : 800. 720.

S-CASE

CH,CL- Φ=23°

ML- Φ=28°

SM,SP- Φ=30°

TYPICAL SOIL PROFILE

SOIL STRATIFICATION IS BASED ON GEOLOGIC PROFILE

SHEAR STRENGTH AND WET DENSITIES SEE PLATE

SECOND ORDER STATIONS

D	PILE SPACING IN DIRECTION OF LOADING
1.00	8B
.85	7B
.70	6B
.55	5B
.40	4B
.25	3B

C	LOADING CONDITION
1.00	INITIAL LOADING
0.30	CYCLIC LOADING

0. 200.

-10. -20. -30. -40. -50. -60. -70. -80. -90. -100. -110.

199.82

365.

365.

NOTES: KH = αK1/B=(0.2222qu

α = 0.4 = Factor of

k1 = Modulue of subg

B1 = Width or diamet

K1 = k1B1 = 80qu(coef

qu = 2 c = Unconfine

C = Reduction for c

D = Group effect re

B = Width of pile m

direction of di

KH = (nh)(Z/B)(C)(D) COH

nh = Coefficient of ho

Z = Depth below equ

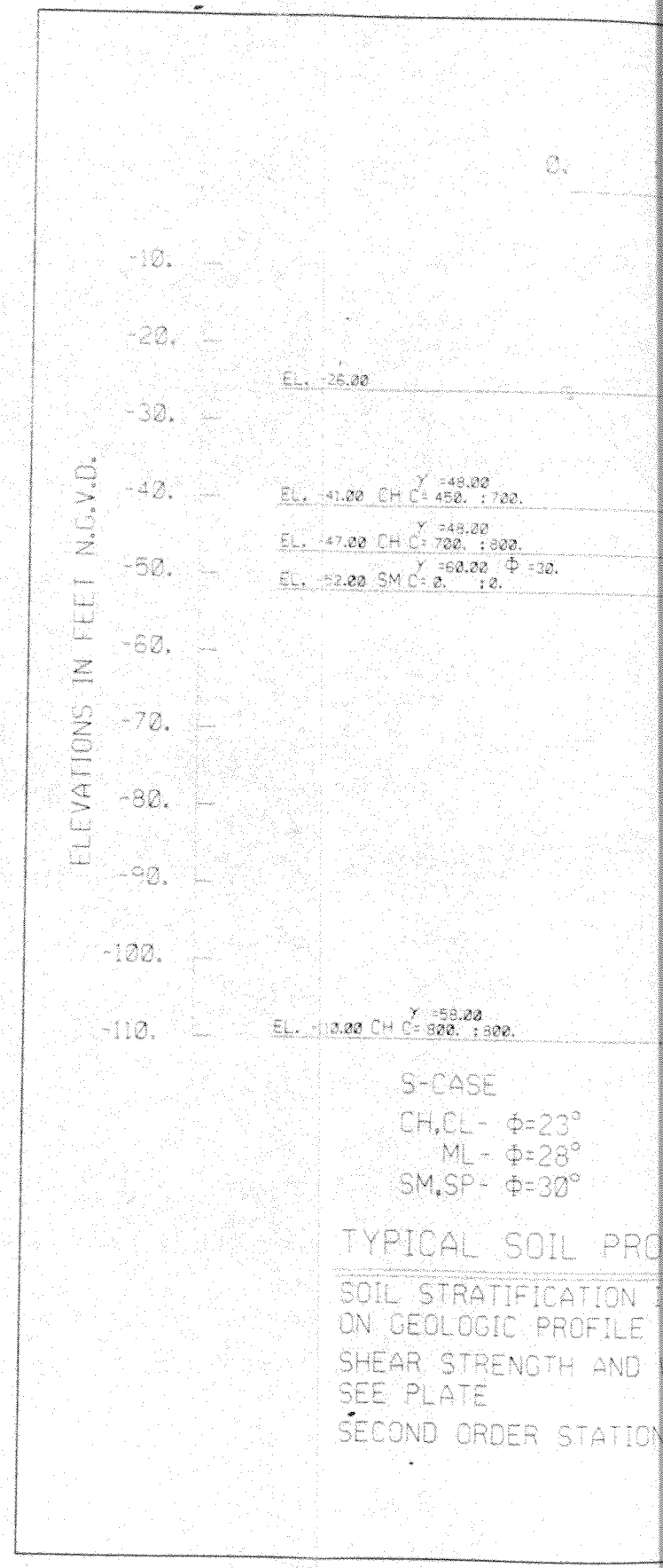
ELEVATIONS IN FEET N.G.V.D.
-10.
-20.
-30.
-40.
-50.
-60.
-70.
-80.
-90.
-100.
-110.
EL. -26.00
Y =48.00
EL. -41.00 CH C= 450. ; 700.
Y =48.00
EL. -47.00 CH C= 700. ; 800.
Y =50.00 Φ =30.
EL. -52.00 SM C= 0. ; 0.
Y =58.00
EL. -103.00 CH C= 800. ; 800.
S-CASE
CH,CL - Φ=23°
ML - Φ=28°
SM,SP - Φ=30°
TYPICAL SOIL PRO
SOIL STRATIFICATION
ON GEOLOGIC PROFILE
SHEAR STRENGTH AND
SEE PLATE
SECOND ORDER STATION

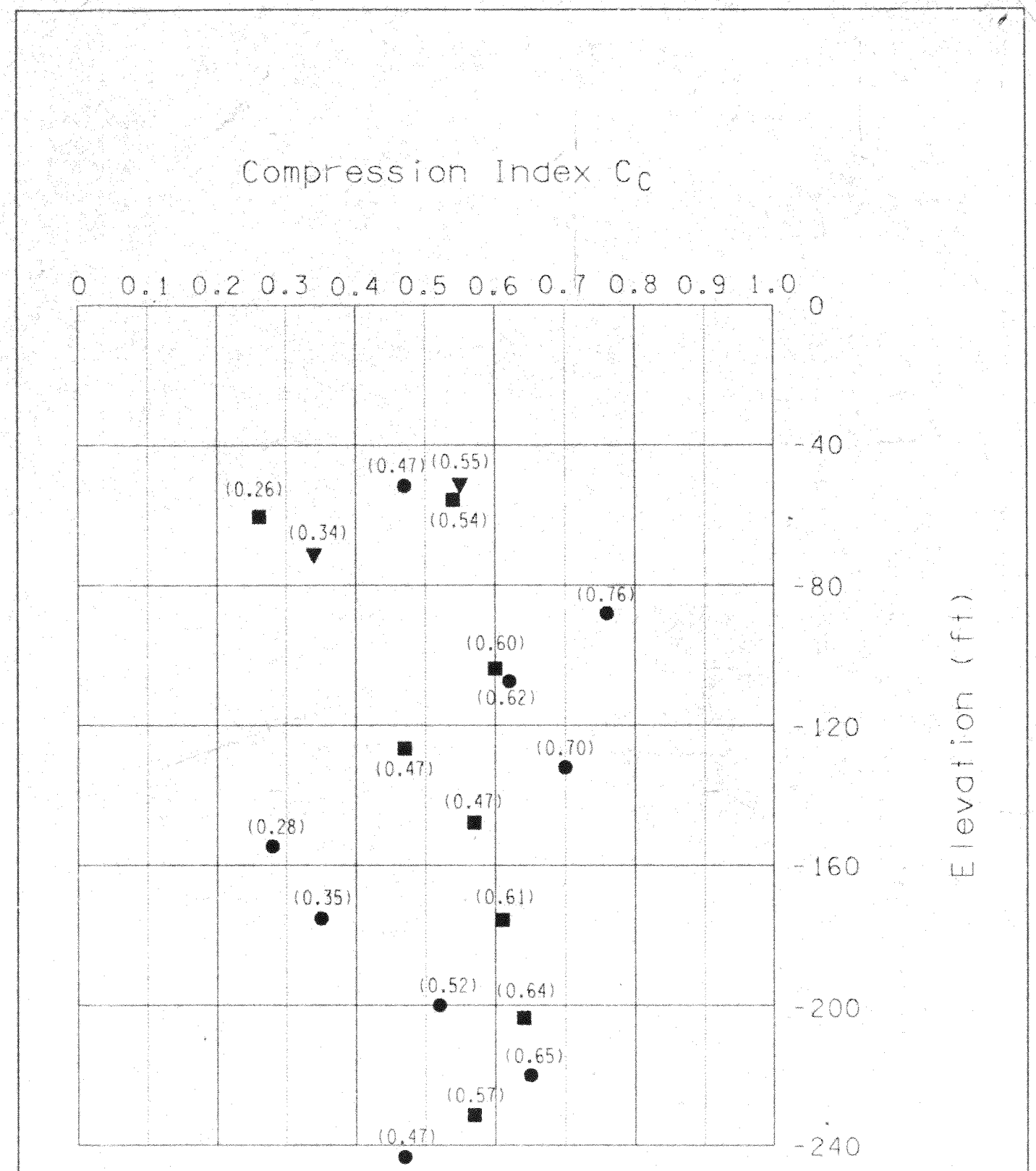
Compression Index C_c
0 0.1 0.2 0.3 0.4 0.5 0.6 0.7 0.8 0.9 1.0
0
-40
-80
-120
-160
-200
-240
Elevation (ft)
(0.26)
(0.34)
(0.47)
(0.55)
(0.54)
(0.76)
(0.60)
(0.62)
(0.47)
(0.70)
(0.47)
(0.28)
(0.35)
(0.61)
(0.52)
(0.64)
(0.65)
(0.57)
(0.47)
LEGEND
Bor. NC-1U
Bor. NC-2U
Bor. NC-3U
C·A·D
MISSISSIPPI RIVER - GULF OUTLET
NEW LOCK AND CONNECTING CHANNELS
(INDUSTRIAL CANAL LOCK REPLACEMENT)
FEASIBILITY STUDY
COMPRESSION INDEX PLOT
BORINGS NC-1U, NC-2U & NC-3U
U.S. ARMY ENGINEER DISTRICT, NEW ORLEANS
CORPS OF ENGINEERS
NEW ORLEANS, LOUISIANA
DESIGNED BY: K.J.T.
DRAWN BY: K.J.T.
CHECKED BY: K.J.T.
PLOT SCALE: 1
PLOT DATE: JUN 93
DATE: JUN 93
CADD FILE/ DWG NO.
FILE NO. H-2-40392

PLATE B-100

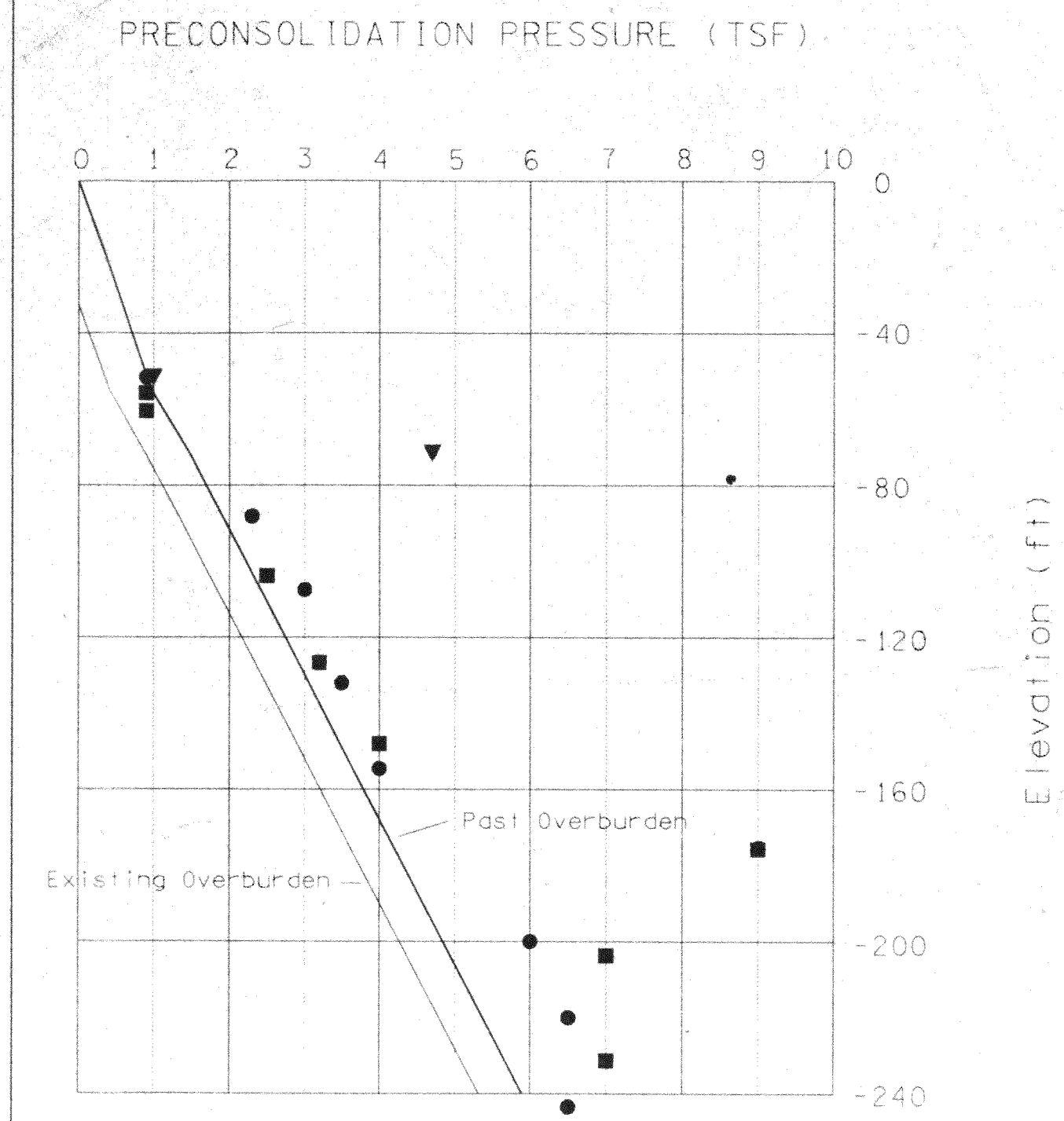

LEGEND

■ Bor. NC-1U

● Bor. NC-2U

▼ Bor. NC-3U

C•A•D

MISSISSIPPI RIVER - GULF OUTLET
NEW LOCK AND CONNECTING CHANNELS
(INDUSTRIAL CANAL LOCK REPLACEMENT)
FEASIBILITY STUDY

PRECONSOLIDATION PRESSURE
BORINGS NC-1U, NC-2U & NC-3U

U.S. ARMY ENGINEER DISTRICT, NEW ORLEANS
CORPS OF ENGINEERS
NEW ORLEANS, LOUISIANA

DESIGNED BY: K.J.T.	PLOT SCALE: 1	PLOT DATE: JUN 93	CADD FILE: THNCPO	
DRAWN BY: K.J.T.			FILE NO. H-2-40392	
CHECKED BY: K.J.T.	DATE: JUN 93			

PLATE B-101

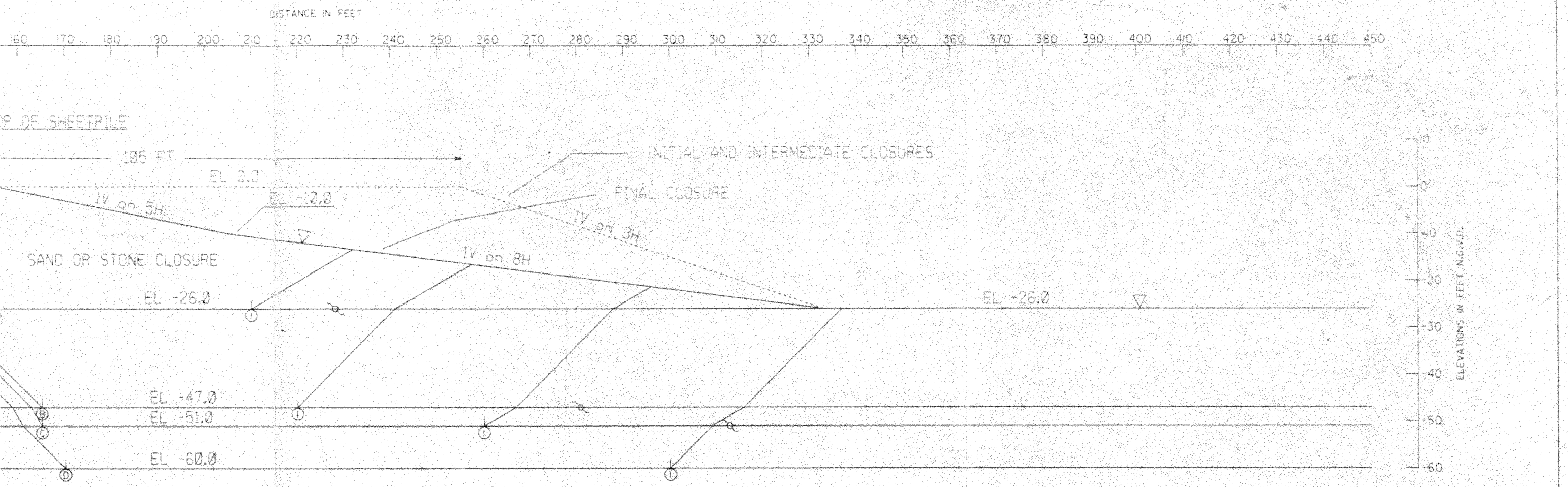

ING FORCES		SUMMATION OF FORCES		FACTOR OF SAFETY
	$-D_P$	RESISTING	DRIVING	
931	11852	50541	38079	1.33
449	63708	114459	79741	1.44
60	58098	160925	108062	1.49
538	71898	212529	151640	1.40

MISSISSIPPI RIVER - GULF OUTLET
NEW LOCK AND CONNECTING CHANNELS
INDUSTRIAL CANAL LOCK REPLACEMENT
FEASIBILITY STUDY
NORTH OF CLAIBORNE AVENUE SITE
STABILITY ANALYSIS
SHEETPILE/STONE CLOSURE

U.S. ARMY ENGINEER DISTRICT, NEW ORLEANS
CORPS OF ENGINEERS
NEW ORLEANS, LOUISIANA

DESIGNED BY: KJT	PLOT SCALE: 10	PLOT DATE: JUL 96	CADD FILE: GRAVCLOS
DRAWN BY: KJT			FILE NO. H-2-40392
CHECKED BY: KJT	DATE: JUL 1996		

PLATE 102A

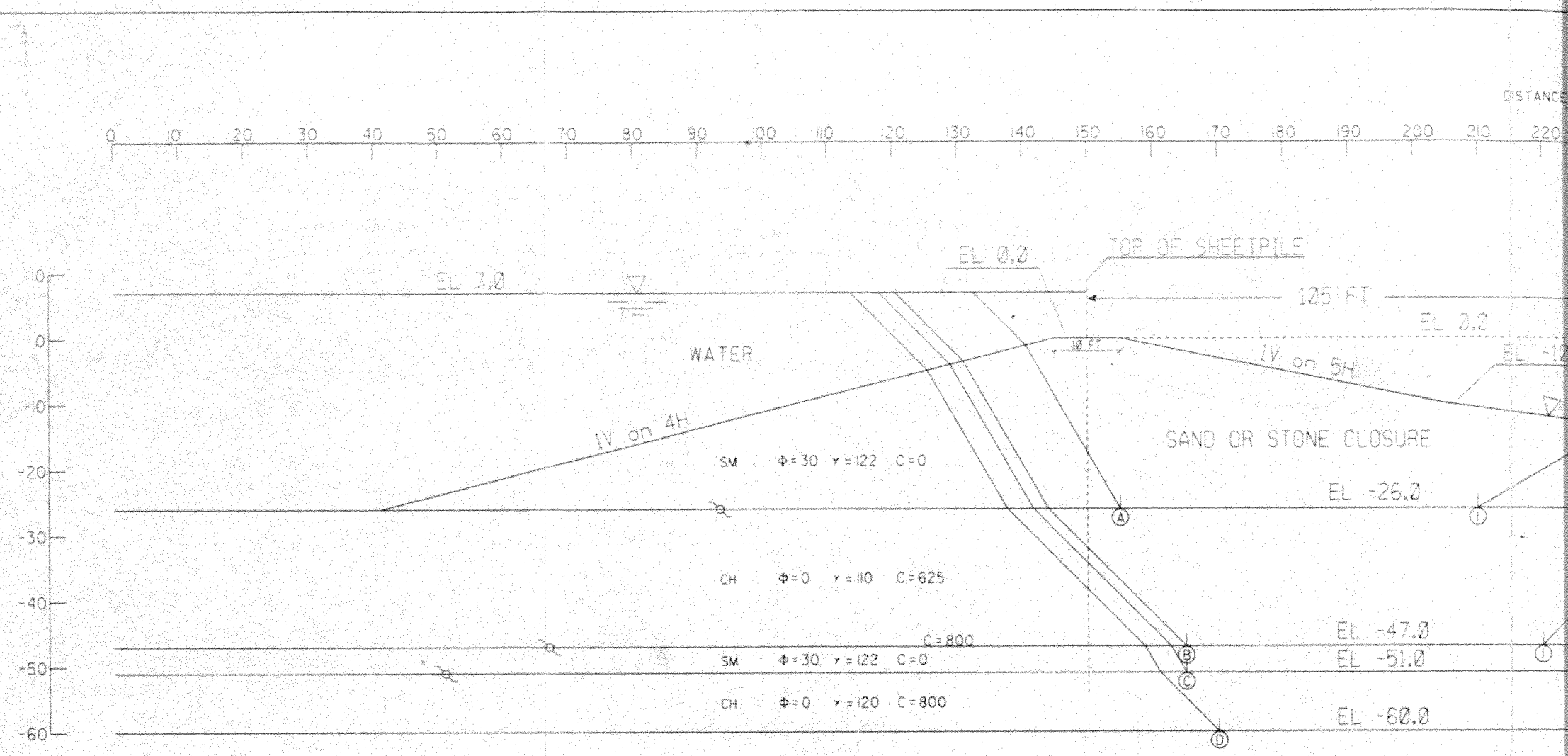

ASSUMED FAILURE SURFACE		RESISTING FORCES			DRIVING FORCES		SUMMATION OF FORCES		FACTOR OF SAFETY
NO.	ELEV.	R_A	R_B	R_P	D_A	$-D_P$	RESISTING	DRIVING	
Ⓐ Ⓘ	-26.0	14232	24750	11559	49931	11852	50541	38079	1.33
Ⓑ Ⓘ	-47.0	37742	44000	32717	143449	63708	114459	79741	1.44
Ⓒ Ⓘ	-51.0	44054	76000	40871	166160	58098	160925	108062	1.49
Ⓓ Ⓘ	-60.0	57725	104000	50804	223538	71898	212529	151640	1.40

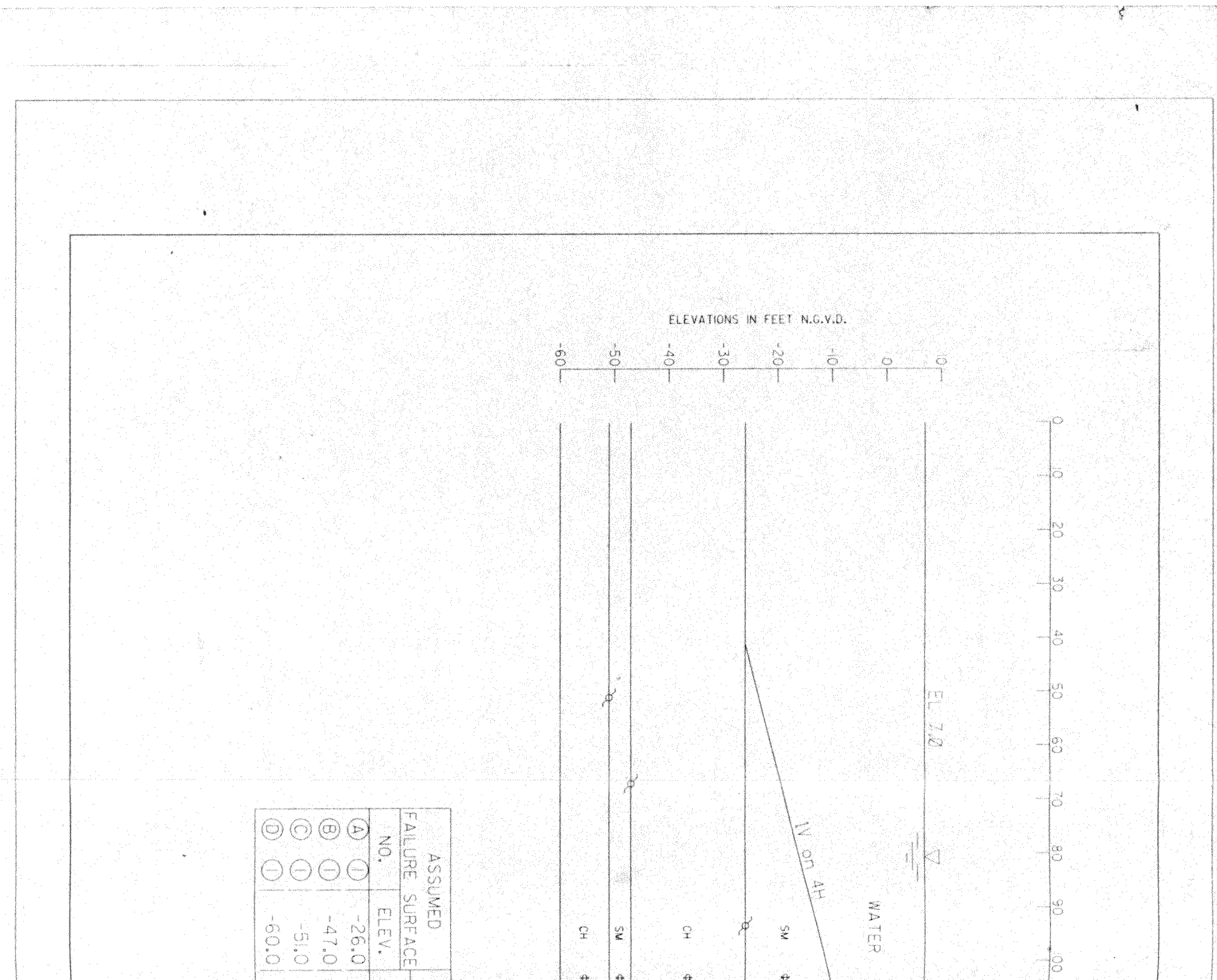
ELEVATIONS IN FEET N.G.V.D.
-60
-50
-40
-30
-20
-10
0
0
0
10
20
30
40
50
60
70
80
90
100
EL 7.0
WATER
1V on 4H
CH
SM
CH
SM
CH
SM
ASSUMED FAILURE SURFACE
NO.
ELEV.
A
-26.0
B
-47.0
C
-51.0
D
-60.0

CWALSHEET PLATE

DISTANCE IN FEET

50 40 30 20 10 0 10 20 30 40 50 60

2400 1900 1400 900 400 00 600 1100 1600 2100

NET PRESSURE (PSF)

PROTECTED SIDE FLOODWALL FLOODSIDE

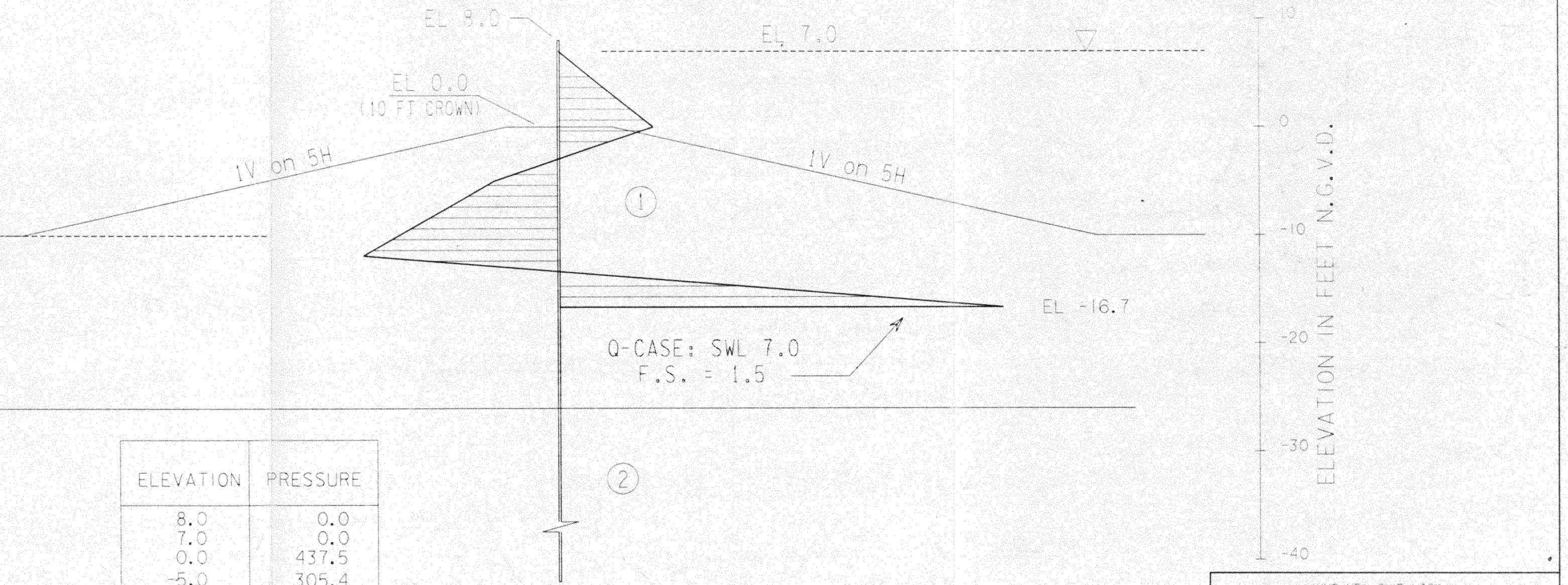

ELEVATION	PRESSURE
8.0	0.0
7.0	0.0
0.0	437.5
-5.0	305.4
-11.9	-912.3
-16.7	2065.3

SOIL PROPERTIES

STRATUM NO.	SOIL TYPE	FRICTION ANGLE	TOTAL WEIGHT	AVERAGE COHESION
1	SM	30	122.0	0
2	CH	0	110.0	625

C·A·D

IHNC NEW SHIP LOCK
GRAVING SITE
SAND OR STONE CLOSURE

CANTILEVERED SHEETPILE WALL
STABILITY ANALYSIS

U.S. ARMY ENGINEER DISTRICT, NEW ORLEANS
CORPS OF ENGINEERS
NEW ORLEANS, LOUISIANA

DESIGNED BY: K.J.T.	PLOT SCALE: 1	PLOT DATE: Jun 96	CADD FILE: GRAVSP	
DRAWN BY: K.J.T.			FILE NO: H-2-40392	
CHECKED BY: K.J.T.	DATE: JUNE 1996			

PLATE B-102B

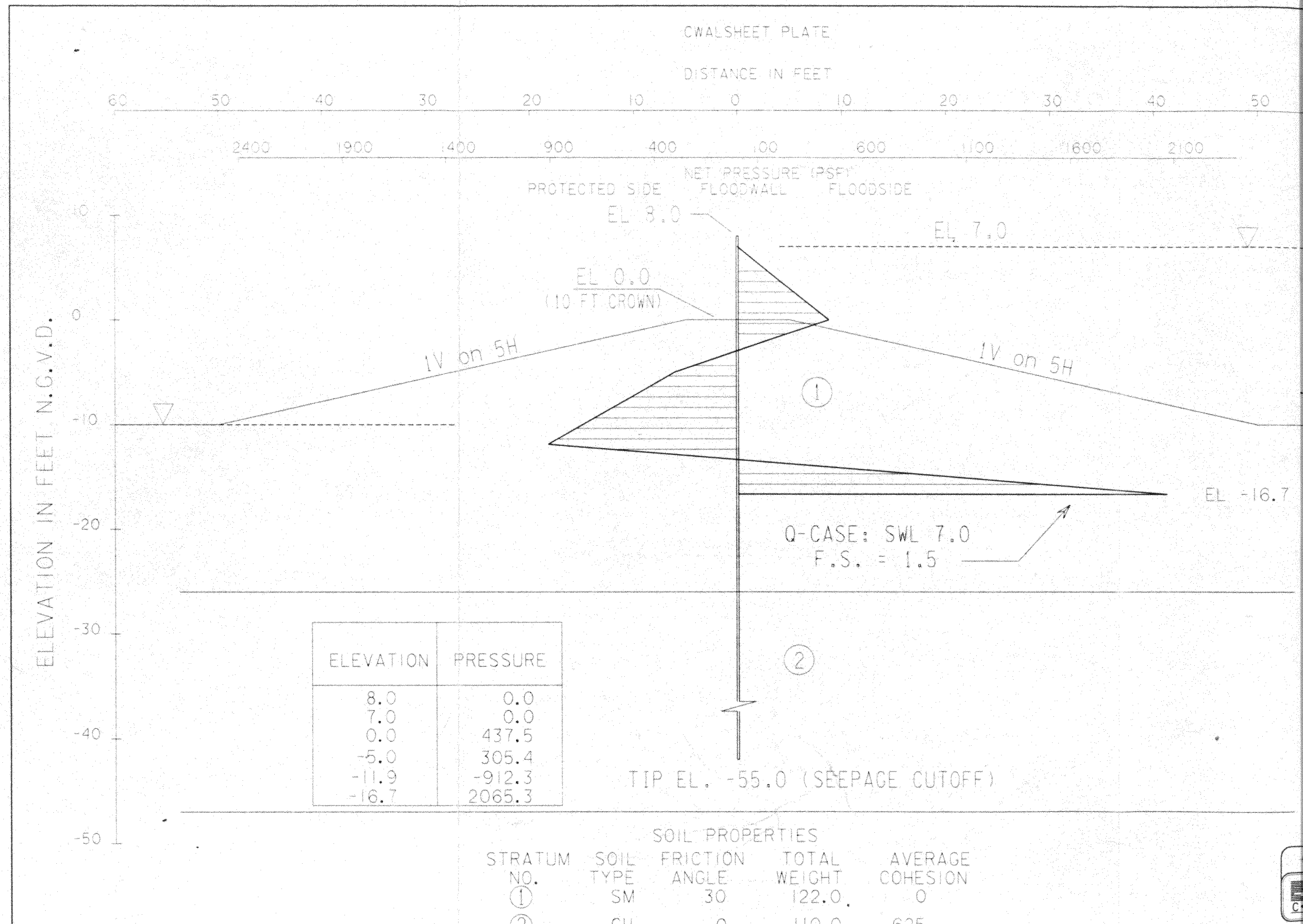

ELEVATION	PRESSURE
8.0	0.0
7.0	0.0
0.0	437.5
-5.0	305.4
-11.9	-912.3
-16.7	2065.3

SOIL PROPERTIES

STRATUM NO.	SOIL TYPE	FRICTION ANGLE	TOTAL WEIGHT	AVERAGE COHESION
①	SM	30	122.0	0
②	CH	0	110.0	625

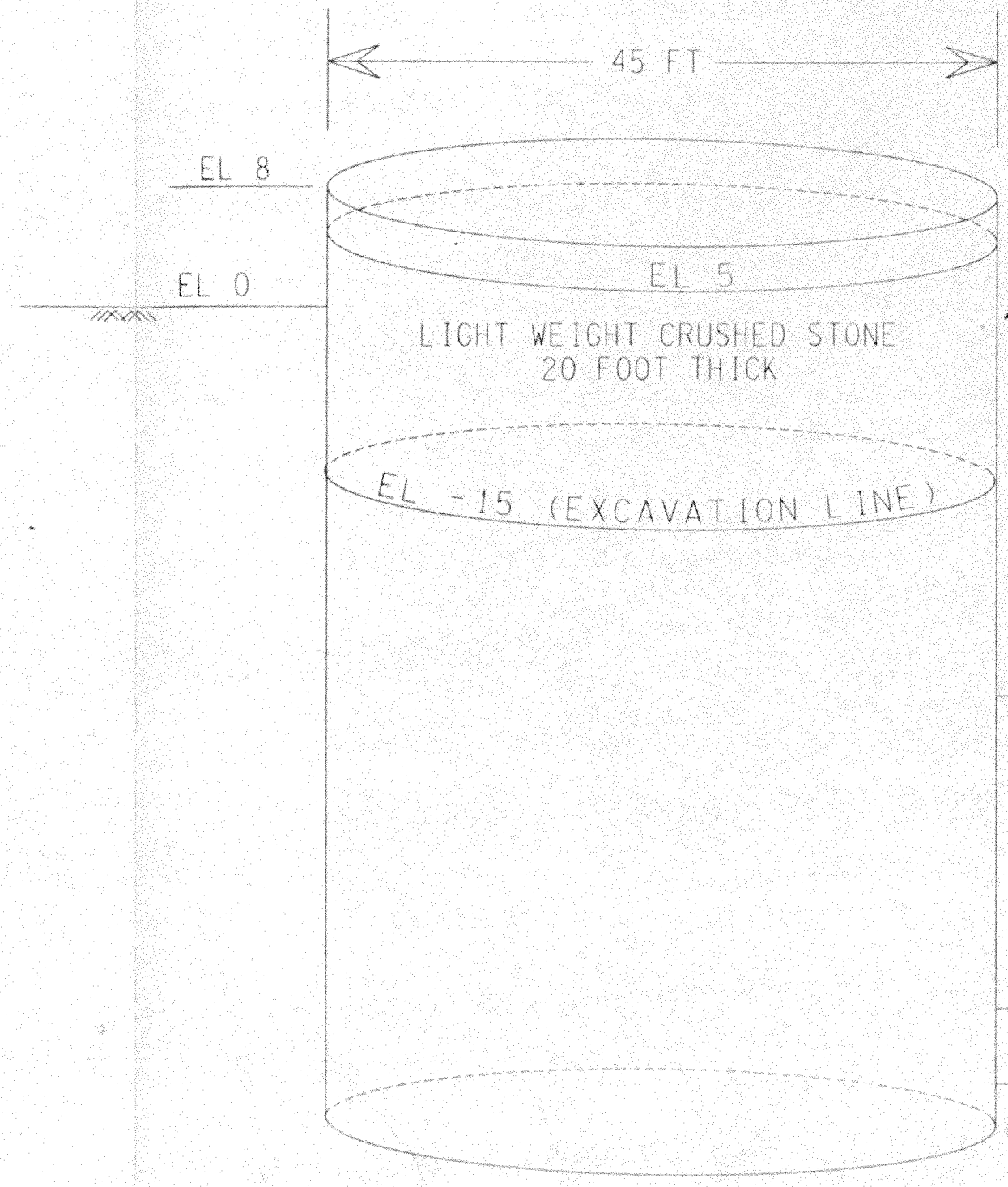

MISSISSIPPI RIVER - GULF OUTLET
NEW LOCK AND CONNECTING CHANNELS
INDUSTRIAL CANAL LOCK REPLACEMENT
FEASIBILITY STUDY
NORTH OF CLAIBORNE AVENUE SITE

COFFERDAM CELL
DIMENSIONS

U.S. ARMY ENGINEER DISTRICT, NEW ORLEANS
CORPS OF ENGINEERS
NEW ORLEANS, LOUISIANA

DESIGNED BY: KJT	PLOT SCALE: 1	PLOT DATE: APRIL 96	CADD FILE: GRCELL	
DRAWN BY: KJT			FILE NO.	H-2-40392
CHECKED BY: KJT		DATE: APRIL 1996		

PLATE 102C

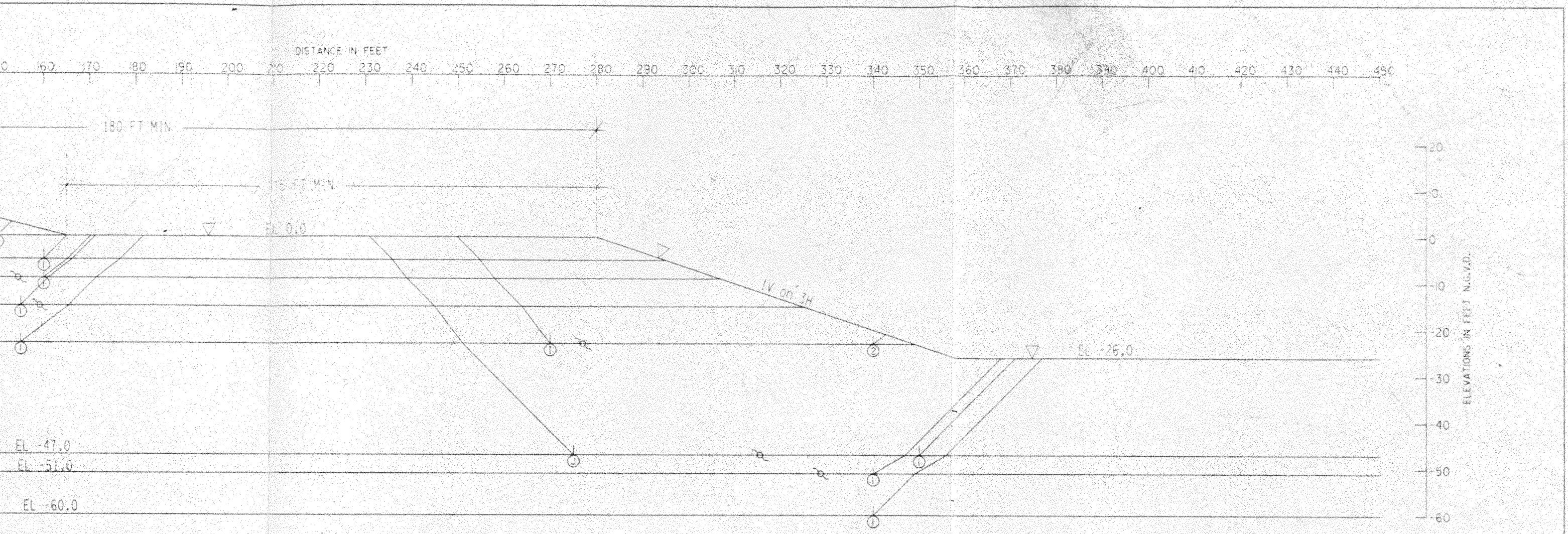

S	SUMMATION OF FORCES		FACTOR OF SAFETY
	RESISTING	DRIVING	
19	15200	11410	1.33
19	31328	18902	1.66
75	39005	25262	1.54
54	44619	32330	1.38
05	63120	44380	1.42
66	113858	73119	1.56
27	252924	166626	1.52
03	260875	175994	1.48
47	284750	208528	1.37
66	33310	25371	1.31
27	112582	89153	1.26

GRAVING SITE

Stratification Based on Bor. 9,10 & 12-CBU (Toe strengths)

MISSISSIPPI RIVER - GULF OUTLET
NEW LOCK AND CONNECTING CHANNELS
INDUSTRIAL CANAL LOCK REPLACEMENT
FEASIBILITY STUDY
NORTH OF CLAIBORNE AVENUE SITE

STABILITY ANALYSIS
HURRICANE PROTECTION LEVEE

U.S. ARMY ENGINEER DISTRICT, NEW ORLEANS
CORPS OF ENGINEERS
NEW ORLEANS, LOUISIANA

DESIGNED BY: KJT	PLOT SCALE: 10	PLOT DATE: JUL 96	CADD FILE: DRYDOCK
DRAWN BY: KJT	DATE: JUL 96		FILE NO. H-2-40392
CHECKED BY: KJT			

PLATE 103A

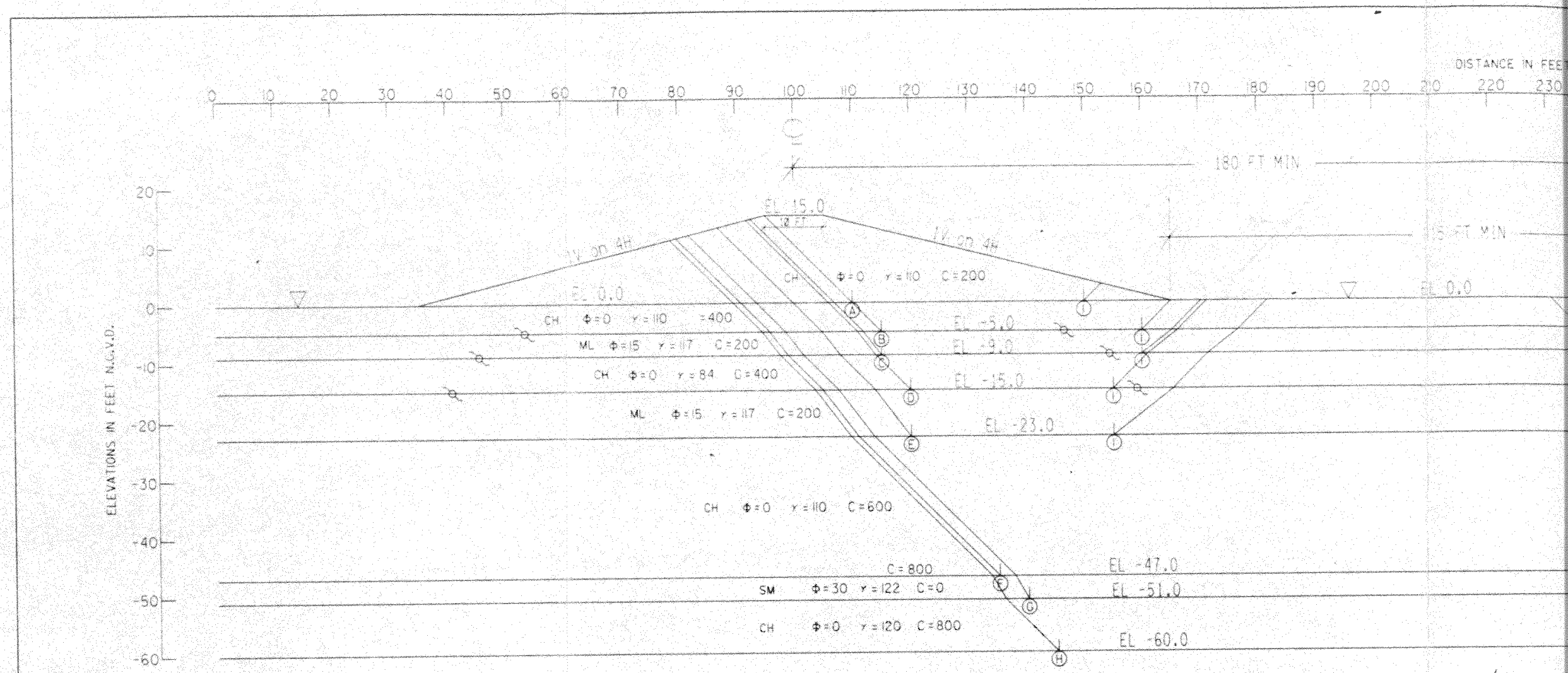

ASSUMED FAILURE SURFACE		RESISTING FORCES			DRIVING FORCES		SUMMATION OF FORCES		FACTOR OF SAFETY
NO.	ELEV.	R_A	R_B	R_P	D_A	$-D_P$	RESISTING	DRIVING	
Ⓐ ①	.0	6000	8000	1200	12029	619	15200	11410	1.33
Ⓑ ①	-5.0	10000	17328	4000	20621	1719	31328	18902	1.66
Ⓒ ①	-9.0	13883	17885	7237	30037	4775	39005	25262	1.54
Ⓓ ①	-15.0	18648	14000	11971	45784	13454	44619	32330	1.38
Ⓔ ①	-23.0	27877	14000	21243	73485	29105	63120	44380	1.42
Ⓔ ②	-23.0	27877	84773	1208	73485	366	113858	73119	1.56
Ⓕ ①	-47.0	56832	170892	25200	192053	25427	252924	166626	1.52
Ⓖ ①	-51.0	64800	160000	36075	214897	38903	260875	175994	1.48
Ⓗ ①	-60.0	79518	156000	49232	278475	69947	284750	208528	1.37
Ⓘ ①	-23.0	15329	16773	1208	25737	366	33310	25371	1.31
Ⓙ ①	-47.0	44490	42892	25200	114580	25427	112582	89153	1.26

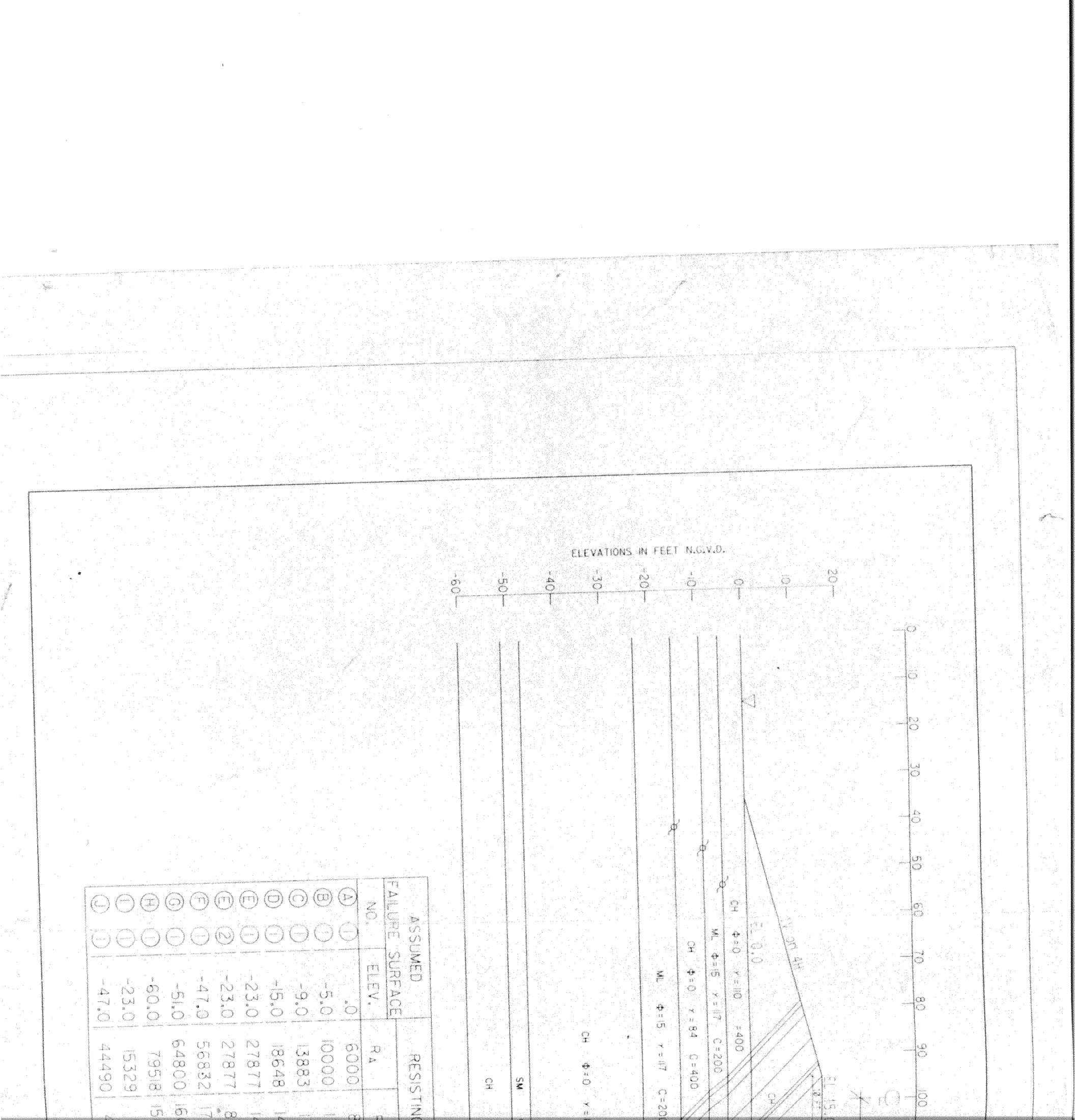

FAILURE SURFACE NO.	ASSUMED ELEV.	RESISTING RA
Ⓐ — ①	.0	6000
Ⓑ — ①	-5.0	10000
Ⓒ — ①	-9.0	13883
Ⓓ — ①	-15.0	18648
Ⓔ — ①	-23.0	27877
Ⓔ — ②	-23.0	27877
Ⓕ — ①	-47.0	56832
Ⓖ — ①	-5.0	64800
Ⓗ — ①	-60.0	79958
Ⓘ — ①	-23.0	15329
Ⓙ — ①	-47.0	44490

3 2 1

DISTANCE IN FEET

1250 1500 1750 2000 2250 2500 2750 3000 3250 3500 3750 4000 4250 4500 4750 5000

BOR. NC-2U
STA. 52+10
790 FT. LEFT OF B/L
07-09 MAY 92
GROUND EL. -32.5

BOR. NC-3U
STA. 45+10 B/L
790 FT. LEFT OF B/L
10 MAY 92
GROUND EL. -31.0

BOR. NC-1U
STA. 38+40
800 FT. WEST OF B/L
4-7 MAY 92
GROUND EL. -32.5

BOR. 4-1
STA 21+40
420 FT. WEST OF B/L
7-8 FEB 79
GROUND EL. -20.0

D

A'

SWAMP>

o approx. -40 NGVD in 1923

BUTARY

SHORE GULF

PRODELTA

PRODELTA

NEARSHORE GULF

INTERDISTRIBUTARY

E

PLEISTOCENE

PLEISTOCENE

C

B

A

-20 -40 -60 -80 -100 -120 -140 -160 -180 -200 -210 -220 -240 -260

ELEVATION IN FEET N.G.V.D.

N CLAYS, SILTS,

MENTS

EDDED WITH LAYERS

H SOME LEAN CLAYS

EATS WITH

MAXIMUM BORING PENETRATION

HORIZONTAL SCALE IN FEET

125 62.5 0 125 250 375

SOIL LEGEND

- CH - FAT CLAY
- CL - LEAN CLAY
- ML - SILT
- SM - SILTY SAND
- SP - SAND POORLY-GRADED
- Wd - WOOD
- Sl - SHELLS
- NO SAMPLE

MISSISSIPPI RIVER - GULF OUTLET
NEW LOCK AND CONNECTING CHANNELS
(INDUSTRIAL CANAL LOCK REPLACEMENT)
FEASIBILITY STUDY

SOIL AND GEOLOGIC PROFILE
NEW SHIP LOCK SITE

U.S. ARMY ENGINEER DISTRICT, NEW ORLEANS
CORPS OF ENGINEERS
NEW ORLEANS, LOUISIANA

DESIGNED BY: T.C.	PLOT SCALE: 10	PLOT DATE: JUN 95	CADD FILE: NCGEOPRO
DRAWN BY: T.C.			FILE NO. H-2-40392
CHECKED BY: T.C.	DATE: JUN 95		

3 2 1

PLATE 103B

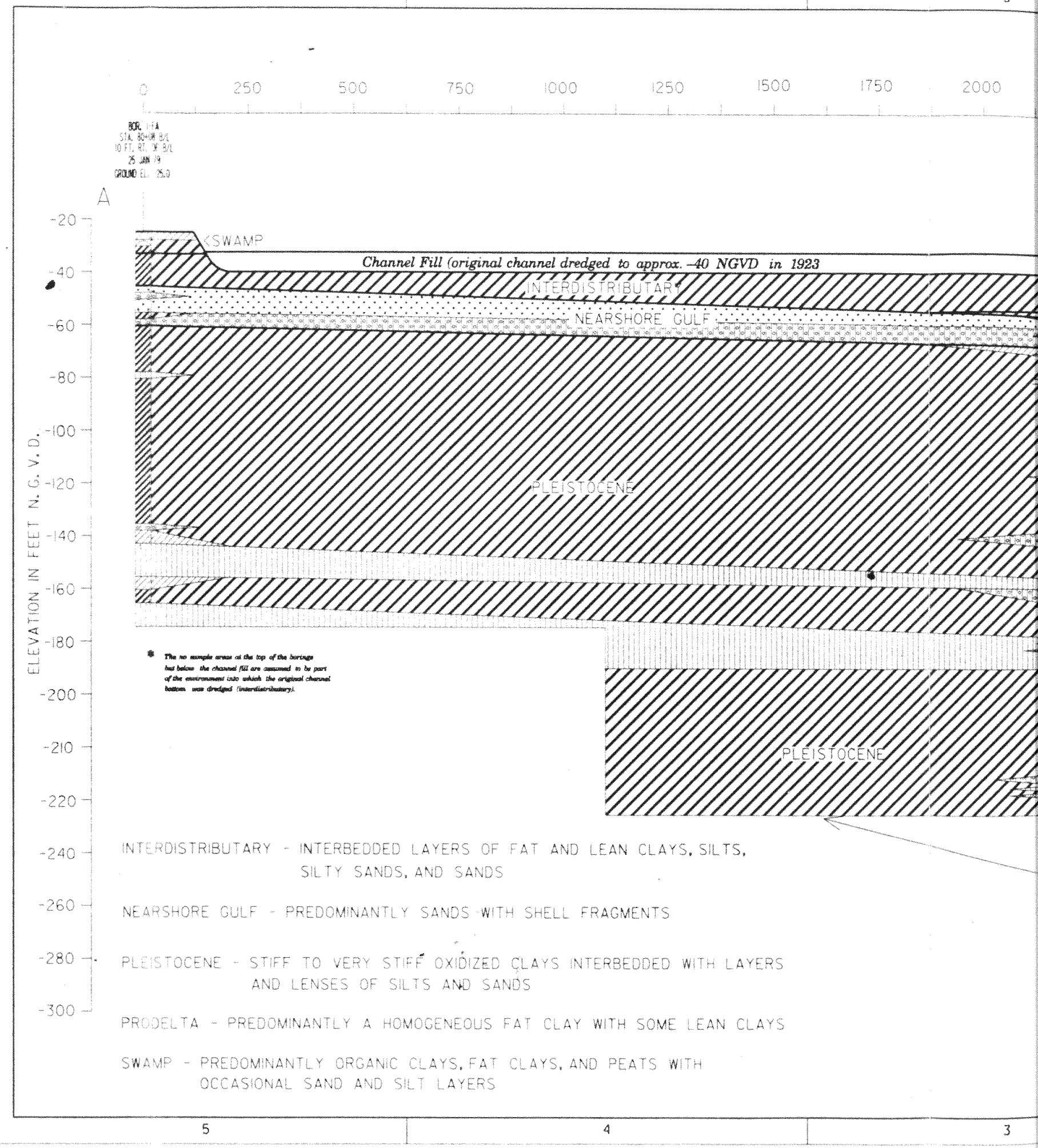
5
4
3
0
250
500
750
1000
1250
1500
1750
2000
BOR. 1-1A
STA. 80+08 B/L
10 FT. RT. OF B/L
25 JAN 79
GROUND EL. 25.0
A
-20
-40
-60
-80
-100
-120
-140
-160
-180
-200
-210
-220
-240
-260
-280
-300
ELEVATION IN FEET N.G.V.D.
SWAMP
Channel Fill (original channel dredged to approx. -40 NGVD in 1923
INTERDISTRIBUTARY
NEARSHORE GULF
PLEISTOCENE
PLEISTOCENE
* The no sample areas at the top of the borings but below the channel fill are assumed to be part of the environment into which the original channel bottom was dredged (interdistributary).
INTERDISTRIBUTARY - INTERBEDDED LAYERS OF FAT AND LEAN CLAYS, SILTS, SILTY SANDS, AND SANDS
NEARSHORE GULF - PREDOMINANTLY SANDS WITH SHELL FRAGMENTS
PLEISTOCENE - STIFF TO VERY STIFF OXIDIZED CLAYS INTERBEDDED WITH LAYERS AND LENSES OF SILTS AND SANDS
PRODELTA - PREDOMINANTLY A HOMOGENEOUS FAT CLAY WITH SOME LEAN CLAYS
SWAMP - PREDOMINANTLY ORGANIC CLAYS, FAT CLAYS, AND PEATS WITH OCCASIONAL SAND AND SILT LAYERS
5
4
3

5

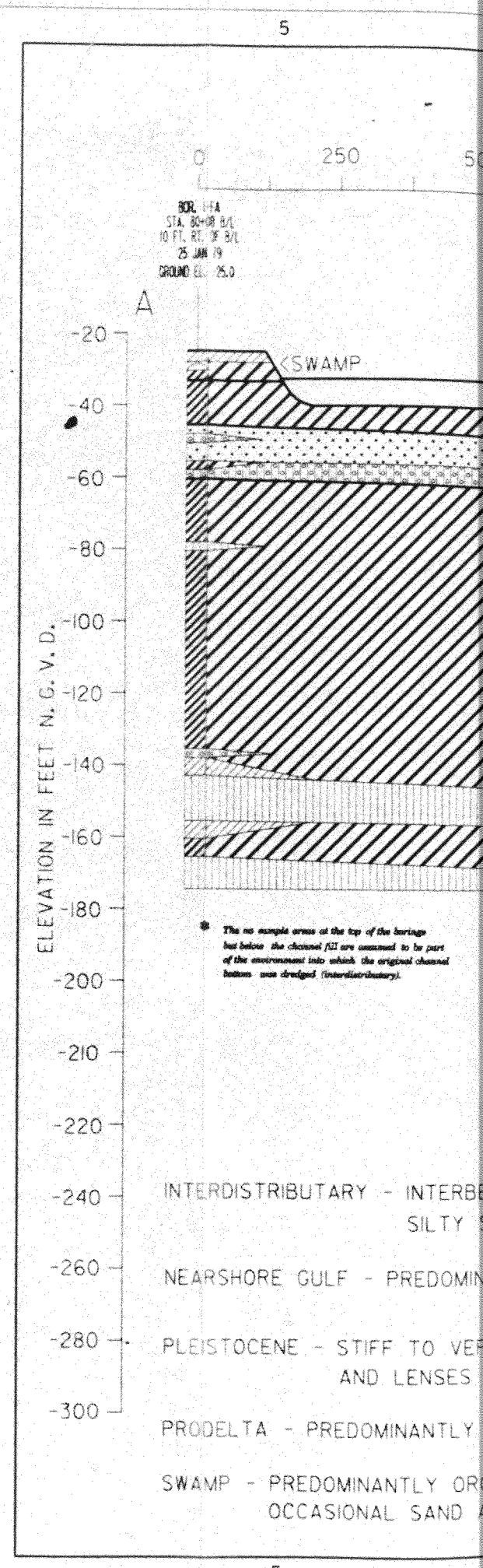
0
250
BOR. 1-A
STA. 85+08 B/L
10 FT. RT. OF B/L
25 JAN 79
GROUND EL. 25.0
A
-20
-40
-60
-80
-100
-120
-140
-160
-180
-200
-210
-220
-240
-260
-280
-300
ELEVATION IN FEET N.G.V.D.
SWAMP
* The no sample areas at the top of the borings but below the channel fill are assumed to be part of the environment into which the original channel bottom was dredged (interdistributary).
INTERDISTRIBUTARY - INTERBE
SILTY
NEARSHORE GULF - PREDOMIN
PLEISTOCENE - STIFF TO VE
AND LENSES
PRODELTA - PREDOMINANTLY
SWAMP - PREDOMINANTLY OR
OCCASIONAL SAND

5

DISTANCE IN FEET

200 400 600 800 1000 1200 1400 1600 1800 2000 2200 2400 2600 2800 3000 3200

BOR. 10-CBU (83-13)
STA. 400+00
100 FT. F.S. LEV. C/L
12 APR 83
GROUND EL. 4.1

BOR. 12-CBU (83-13)
STA. 430+75
100 FT. PROTECTED SIDE OF LEVEE C/L
15-18 APR 83
GROUND EL. 3.7

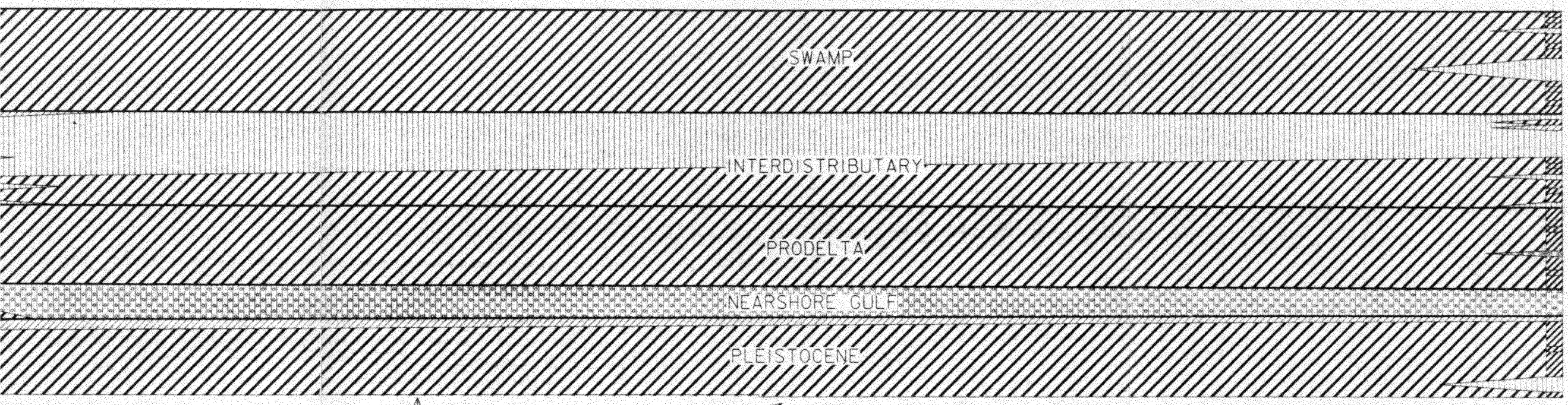

ELEVATION IN FEET N.G.V.D.
20
10
0
-10
-20
-30
-40
-50
-60
-70
-80
-90
-100
-110

END
FAT CLAY
LEAN CLAY
SILT
SILTY SAND
SHELLS
AMPLE

MAXIMUM BORING PENETRATION

HORIZONTAL SCALE IN FEET
100 50 0 100 200 300

AL - ARTIFICIAL LEVEE

INTERDISTRIBUTARY - INTERBEDDED LAYERS OF FAT AND LEAN CLAYS, SILTS, SILTY SANDS, AND SANDS

NEARSHORE GULF - PREDOMINANTLY SAND AND SILTY SAND WITH SHELL FRAGMENTS

PLEISTOCENE - STIFF TO VERY STIFF OXIDIZED CLAYS INTERBEDDED WITH LAYERS AND LENSES OF SILTS AND SANDS

PRODELTA - PREDOMINANTLY A HOMOGENEOUS FAT CLAY WITH SOME LEAN CLAYS

SWAMP - PREDOMINANTLY ORGANIC CLAYS, FAT CLAYS, AND PEATS WITH OCCASIONAL SAND AND SILT LAYERS AND WOOD

MISSISSIPPI RIVER - GULF OUTLET
NEW LOCK AND CONNECTING CHANNELS
INDUSTRIAL CANAL LOCK REPLACEMENT
FEASIBILITY STUDY
NORTH OF CLAIBORNE AVENUE SITE
GRAVING SITE

SOIL AND GEOLOGIC PROFILE

U.S. ARMY ENGINEER DISTRICT, NEW ORLEANS
CORPS OF ENGINEERS
NEW ORLEANS, LOUISIANA

DESIGNED BY: T. CREASY	PLOT SCALE: 10	PLOT DATE: June 1996	CADD FILE: AURORA2
DRAWN BY: T. CREASY			FILE NO. H-2-40392
CHECKED BY: D. BRITSCH	DATE: June 1996		

PLATE 103C

DISTANCE IN FEET

0 200 400 600 800 1000 1200 1400 1600 1800 2000 2200 2400 2600

BOR. 9-CBU (83-13)
STA. 400+00
ON C/L LEVEE
23-25 MAR 83
GROUND EL. 12.4

BOR. 10-CBU (83-13)
STA. 400+00
100 FT. F.S. LEV. C/L
12 APR 83
GROUND EL. 4.1

ELEVATION IN FEET N.G.V.D.

20 10 0 -10 -20 -30 -40 -50 -60 -70 -80 -90 -100 -110

AL

SWAMP

INTERDISTRIBUTARY

PRODELTA

NEARSHORE GULF

PLEISTOCENE

MAXIMUM BORING PENETRATION

SOIL LEGEND

- CH - FAT CLAY
- CL - LEAN CLAY
- ML - SILT
- SM - SILTY SAND
- SI - SHELLS
- NO SAMPLE

HORIZONTAL SCALE IN FEET

100 50 0 100 200 300

AL - ARTIFICIAL LEVEE

INTERDISTRIBUTARY - INTERBEDDED LAYERS OF FAT AND LEAN CLAYS, SI
SILTY SANDS, AND SANDS

NEARSHORE GULF - PREDOMINANTLY SAND AND SILTY SAND WITH SHELL

PLEISTOCENE - STIFF TO VERY STIFF OXIDIZED CLAYS INTERBEDDED WITH
AND LENSES OF SILTS AND SANDS

PRODELTA - PREDOMINANTLY A HOMOGENEOUS FAT CLAY WITH SOME LEA

SWAMP - PREDOMINANTLY ORGANIC CLAYS, FAT CLAYS, AND PEATS WITH
OCCASIONAL SAND AND SILT LAYERS AND WOOD

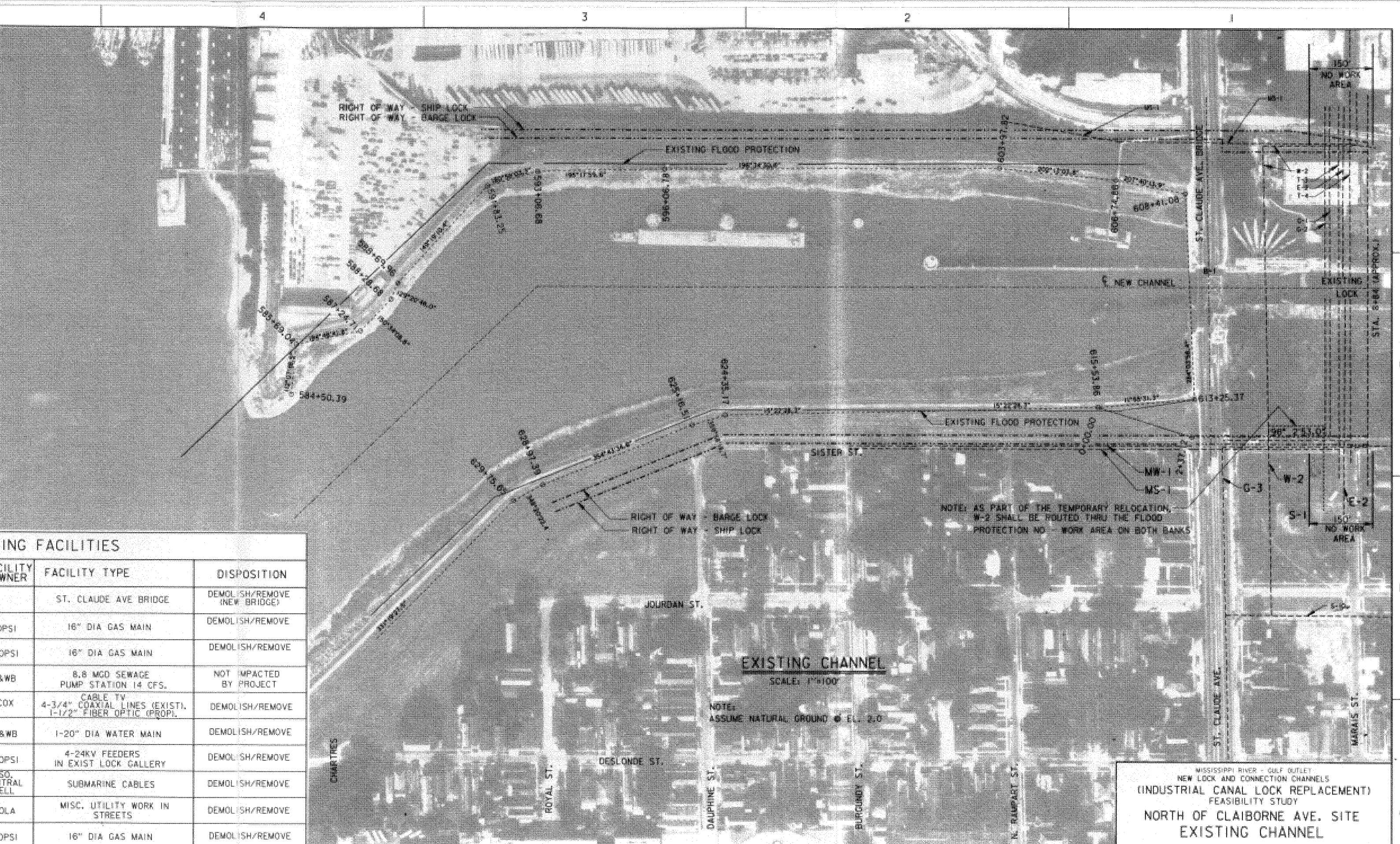

ING FACILITIES

CILITY WNER	FACILITY TYPE	DISPOSITION
	ST. CLAUDE AVE BRIDGE	DEMOLISH/REMOVE (NEW BRIDGE)
PSI	16" DIA GAS MAIN	DEMOLISH/REMOVE
PSI	16" DIA GAS MAIN	DEMOLISH/REMOVE
&WB	8.8 MGD SEWAGE PUMP STATION 14 CFS.	NOT IMPACTED BY PROJECT
COX	CABLE TV 4-3/4" COAXIAL LINES (EXIST). 1-1/2" FIBER OPTIC (PROP).	DEMOLISH/REMOVE
&WB	1-20" DIA WATER MAIN	DEMOLISH/REMOVE
PSI	4-24KV FEEDERS IN EXIST LOCK GALLERY	DEMOLISH/REMOVE
SO. TRAL ELL	SUBMARINE CABLES	DEMOLISH/REMOVE
OLA	MISC. UTILITY WORK IN STREETS	DEMOLISH/REMOVE
PSI	16" DIA GAS MAIN	DEMOLISH/REMOVE
&WB	JORDAN AVE STORM DRAIN	NOT IMPACTED BY PROJECT

SCALE: 1" = 100'

100' 0 100' 200' 300' 400'

MISSISSIPPI RIVER - GULF OUTLET
NEW LOCK AND CONNECTION CHANNELS
(INDUSTRIAL CANAL LOCK REPLACEMENT)
FEASIBILITY STUDY

NORTH OF CLAIBORNE AVE. SITE
EXISTING CHANNEL

U.S. ARMY ENGINEER DISTRICT, NEW ORLEANS
CORPS OF ENGINEERS
NEW ORLEANS, LOUISIANA

DESIGNED BY: X DRAWN BY: X CHECKED BY: X	PLOT SCALE: 100	PLOT DATE: X	CADD FILE: GENPLR2.DGN
	DATE: X		FILE NO. H-2-40392

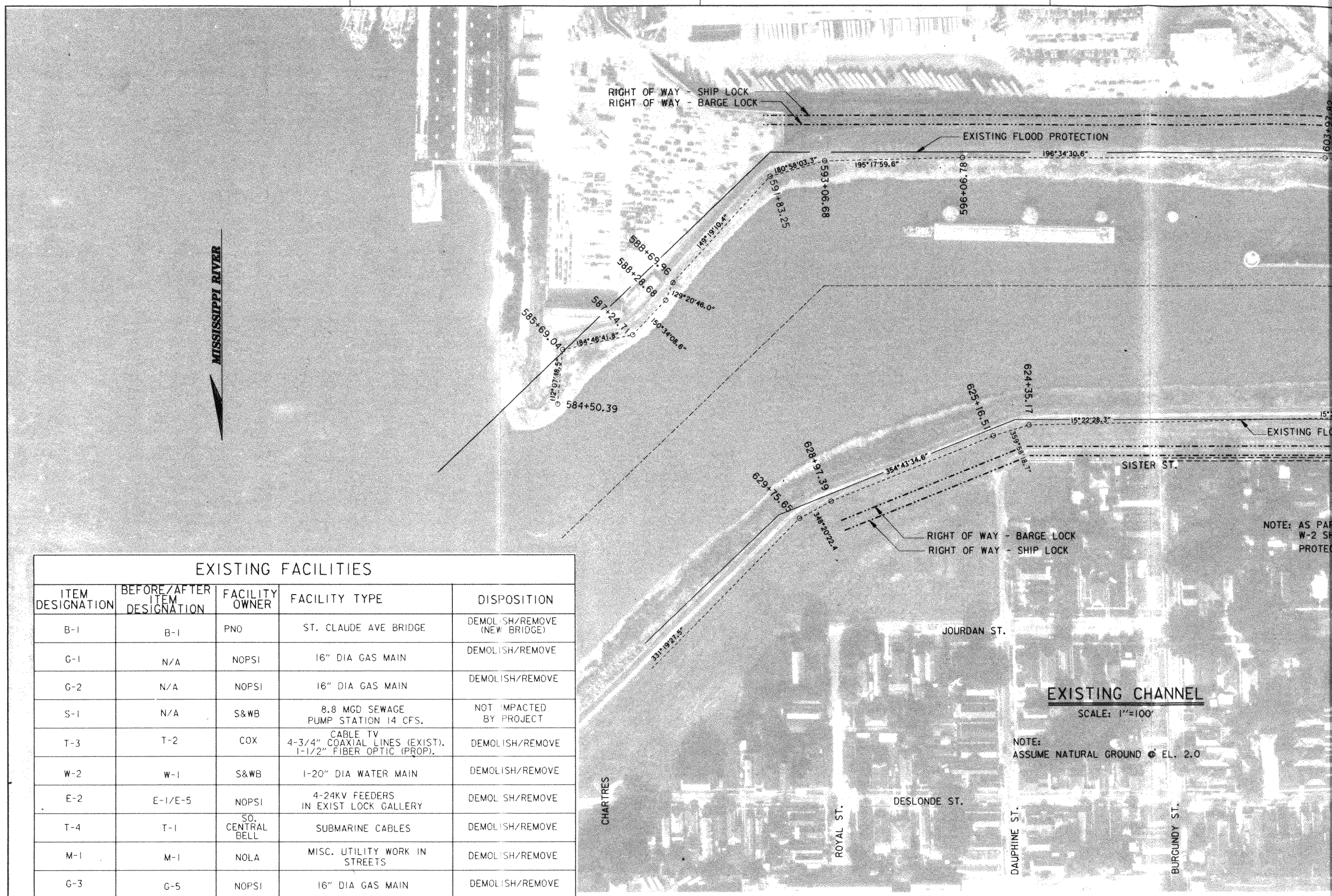

EXISTING FACILITIES

ITEM DESIGNATION	BEFORE/AFTER ITEM DESIGNATION	FACILITY OWNER	FACILITY TYPE	DISPOSITION
B-1	B-1	PNO	ST. CLAUDE AVE BRIDGE	DEMOLISH/REMOVE (NEW BRIDGE)
G-1	N/A	NOPSI	16" DIA GAS MAIN	DEMOLISH/REMOVE
G-2	N/A	NOPSI	16" DIA GAS MAIN	DEMOLISH/REMOVE
S-1	N/A	S&WB	8.8 MGD SEWAGE PUMP STATION 14 CFS.	NOT IMPACTED BY PROJECT
T-3	T-2	COX	CABLE TV 4-3/4" COAXIAL LINES (EXIST). 1-1/2" FIBER OPTIC (PROP).	DEMOLISH/REMOVE
W-2	W-1	S&WB	1-20" DIA WATER MAIN	DEMOLISH/REMOVE
E-2	E-1/E-5	NOPSI	4-24KV FEEDERS IN EXIST LOCK GALLERY	DEMOLISH/REMOVE
T-4	T-1	SO. CENTRAL BELL	SUBMARINE CABLES	DEMOLISH/REMOVE
M-1	M-1	NOLA	MISC. UTILITY WORK IN STREETS	DEMOLISH/REMOVE
G-3	G-5	NOPSI	16" DIA GAS MAIN	DEMOLISH/REMOVE
S-10	N/A	S&WB	JORDAN AVE STORM DRAIN	NOT IMPACTED BY PROJECT

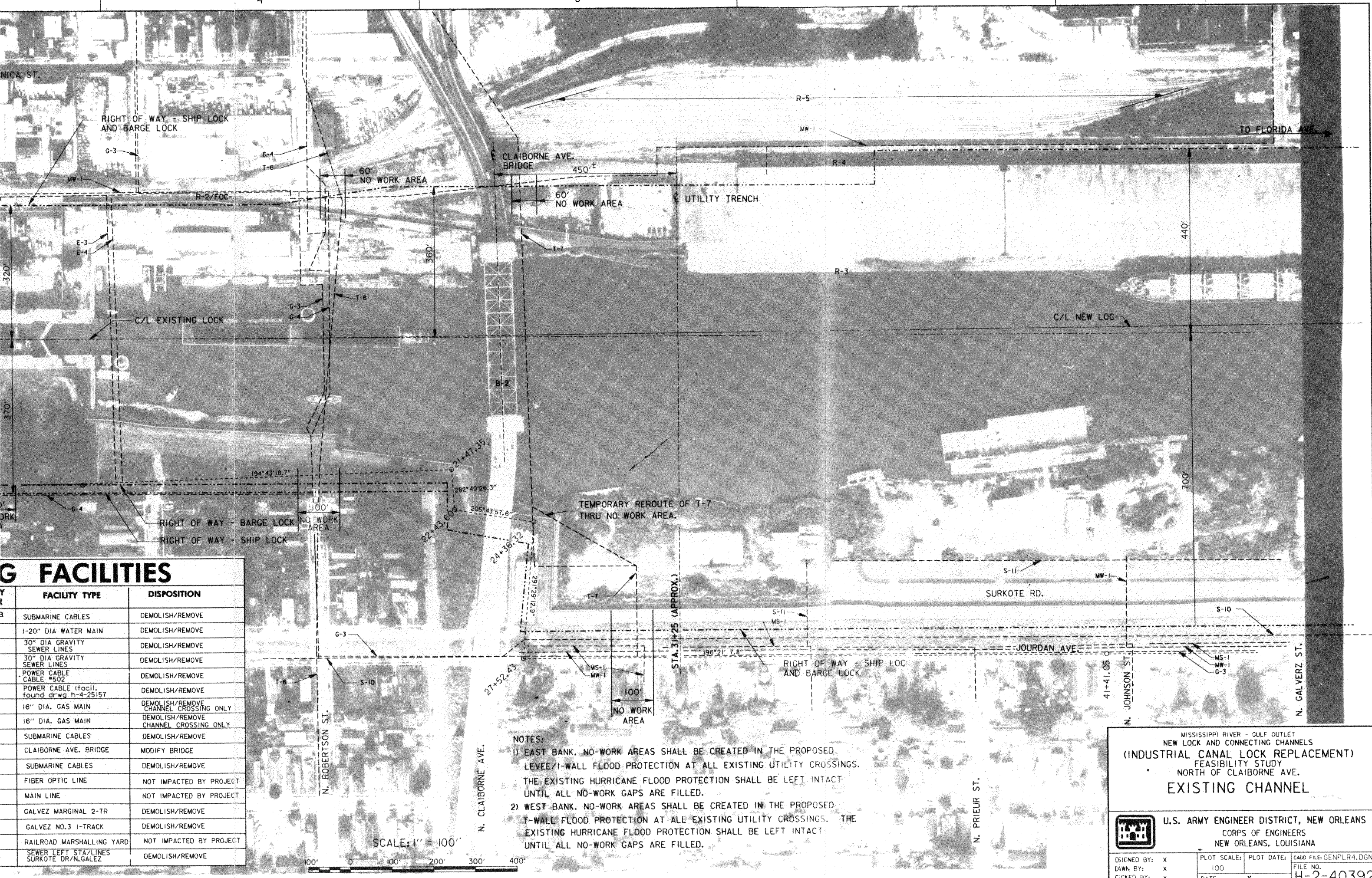

G FACILITIES

Y	FACILITY TYPE	DISPOSITION
3	SUBMARINE CABLES	DEMOLISH/REMOVE
	1-20" DIA WATER MAIN	DEMOLISH/REMOVE
	30" DIA GRAVITY SEWER LINES	DEMOLISH/REMOVE
	30" DIA GRAVITY SEWER LINES	DEMOLISH/REMOVE
	POWER CABLE CABLE #502	DEMOLISH/REMOVE
	POWER CABLE (facil. found drwg h-4-25157	DEMOLISH/REMOVE
	16" DIA. GAS MAIN	DEMOLISH/REMOVE CHANNEL CROSSING ONLY
	16" DIA. GAS MAIN	DEMOLISH/REMOVE CHANNEL CROSSING ONLY
	SUBMARINE CABLES	DEMOLISH/REMOVE
	CLAIBORNE AVE. BRIDGE	MODIFY BRIDGE
	SUBMARINE CABLES	DEMOLISH/REMOVE
	FIBER OPTIC LINE	NOT IMPACTED BY PROJECT
	MAIN LINE	NOT IMPACTED BY PROJECT
	GALVEZ MARGINAL 2-TR	DEMOLISH/REMOVE
	GALVEZ NO.3 1-TRACK	DEMOLISH/REMOVE
	RAILROAD MARSHALLING YARD	NOT IMPACTED BY PROJECT
	SEWER LEFT STA/LINES SURKOTE DR/N.GALEZ	DEMOLISH/REMOVE

NOTES;

1) EAST BANK. NO-WORK AREAS SHALL BE CREATED IN THE PROPOSED LEVEE/I-WALL FLOOD PROTECTION AT ALL EXISTING UTILITY CROSSINGS. THE EXISTING HURRICANE FLOOD PROTECTION SHALL BE LEFT INTACT UNTIL ALL NO-WORK GAPS ARE FILLED.
2) WEST BANK. NO-WORK AREAS SHALL BE CREATED IN THE PROPOSED T-WALL FLOOD PROTECTION AT ALL EXISTING UTILITY CROSSINGS. THE EXISTING HURRICANE FLOOD PROTECTION SHALL BE LEFT INTACT UNTIL ALL NO-WORK GAPS ARE FILLED.

MISSISSIPPI RIVER - GULF OUTLET
NEW LOCK AND CONNECTING CHANNELS
(INDUSTRIAL CANAL LOCK REPLACEMENT)
FEASIBILITY STUDY
NORTH OF CLAIBORNE AVE.

EXISTING CHANNEL

U.S. ARMY ENGINEER DISTRICT, NEW ORLEANS
CORPS OF ENGINEERS
NEW ORLEANS, LOUISIANA

DSIGNED BY: X	PLOT SCALE: 100	PLOT DATE:	CADD FILE: GENPLR4.DGN
DAWN BY: X			FILE NO. H-2-40392
CKED BY: X	DATE: X		

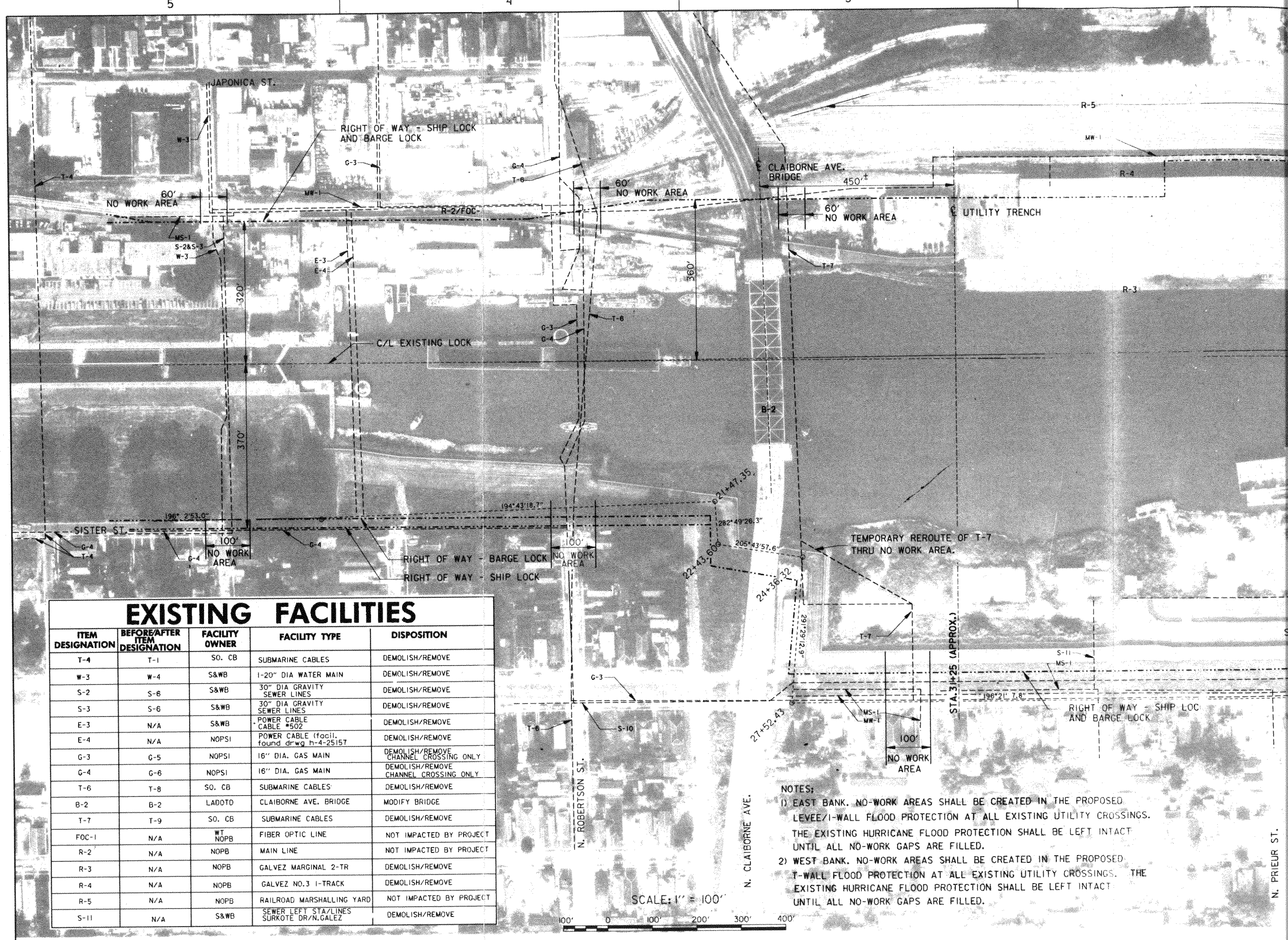

EXISTING FACILITIES

ITEM DESIGNATION	BEFORE/AFTER ITEM DESIGNATION	FACILITY OWNER	FACILITY TYPE	DISPOSITION
T-4	T-1	SO. CB	SUBMARINE CABLES	DEMOLISH/REMOVE
W-3	W-4	S&WB	1-20" DIA WATER MAIN	DEMOLISH/REMOVE
S-2	S-6	S&WB	30" DIA GRAVITY SEWER LINES	DEMOLISH/REMOVE
S-3	S-6	S&WB	30" DIA GRAVITY SEWER LINES	DEMOLISH/REMOVE
E-3	N/A	S&WB	POWER CABLE CABLE #502	DEMOLISH/REMOVE
E-4	N/A	NOPSI	POWER CABLE (facil. found drwg h-4-25157	DEMOLISH/REMOVE
G-3	G-5	NOPSI	16" DIA. GAS MAIN	DEMOLISH/REMOVE CHANNEL CROSSING ONLY
G-4	G-6	NOPSI	16" DIA. GAS MAIN	DEMOLISH/REMOVE CHANNEL CROSSING ONLY
T-6	T-8	SO. CB	SUBMARINE CABLES	DEMOLISH/REMOVE
B-2	B-2	LADOTD	CLAIBORNE AVE. BRIDGE	MODIFY BRIDGE
T-7	T-9	SO. CB	SUBMARINE CABLES	DEMOLISH/REMOVE
FOC-1	N/A	WT NOPB	FIBER OPTIC LINE	NOT IMPACTED BY PROJECT
R-2	N/A	NOPB	MAIN LINE	NOT IMPACTED BY PROJECT
R-3	N/A	NOPB	GALVEZ MARGINAL 2-TR	DEMOLISH/REMOVE
R-4	N/A	NOPB	GALVEZ NO.3 1-TRACK	DEMOLISH/REMOVE
R-5	N/A	NOPB	RAILROAD MARSHALLING YARD	NOT IMPACTED BY PROJECT
S-11	N/A	S&WB	SEWER LEFT STA/LINES SURKOTE DR/N.GALEZ	DEMOLISH/REMOVE

NOTES:

1) EAST BANK. NO-WORK AREAS SHALL BE CREATED IN THE PROPOSED LEVEE/I-WALL FLOOD PROTECTION AT ALL EXISTING UTILITY CROSSINGS. THE EXISTING HURRICANE FLOOD PROTECTION SHALL BE LEFT INTACT UNTIL ALL NO-WORK GAPS ARE FILLED.

2) WEST BANK. NO-WORK AREAS SHALL BE CREATED IN THE PROPOSED T-WALL FLOOD PROTECTION AT ALL EXISTING UTILITY CROSSINGS. THE EXISTING HURRICANE FLOOD PROTECTION SHALL BE LEFT INTACT UNTIL ALL NO-WORK GAPS ARE FILLED.

EXISTING FACILITIES				
ITEM DESIGNATION	BEFORE/AFTER ITEM DESIGNATION	FACILITY OWNER	FACILITY TYPE	DISPOSITION
S-7	S-4	S&WB	66" DIA FORCED SEWER MAIN	DEMOLISH/REMOVE
E-10	E-6	S&WB	2-15KV 25HZ FEEDER	DEMOLISH/REMOVE
E-11	E-7	S&WB	2-15KV 25HZ FEEDER	DEMOLISH/REMOVE
W-6	W-5	S&WB	48" DIA WATER MAIN	DEMOLISH/REMOVE
S-8	S-5	S&WB	54" DIA FORCED SEWER MAIN	DEMOLISH/REMOVE
E-12	E-8	S&WB	2-15KV 25HZ FEEDER	DEMOLISH/REMOVE
E-13	E-9	NOPSI	2-24KV PRIM IN 6"CASE	DEMOLISH/REMOVE
E-14	N/A	NOPSI	POWER CABLES	DEMOLISH/REMOVE
S-9	N/A	S&WB	FLORIDA AVE 45' WIDE CONCRETE SIPHON	NOT IMPACTED BY PROJECT
B-3	N/A	PNO	FLORIDA AVE BRIDGE (VEHICULAR)	NOT IMPACTED BY PROJECT
R-1	N/A	PNO	FLORIDA AVE BRIDGE (RAILROAD)	NOT IMPACTED BY PROJECT
E-15	N/A	LP&L	AERIAL TRANSMISSION LINES	NOT IMPACTED BY PROJECT
T-10	N/A	NOPSI	COMMUNICATION CABLES	DEMOLISH/REMOVE
FOC-1	N/A	WT NOPB	FIBER OPTIC LINE	NOT IMPACTED BY PROJECT

EXISTING FACILITIES				
ITEM DESIGNATION	BEFORE/AFTER ITEM DESIGNATION	FACILITY OWNER	FACILITY TYPE	DISPOSITION
R-2	N/A	NOPB	MAIN LINE	NOT IMPACTED BY PROJECT
R-3	N/A	NOPB	GALVEZ MARGINAL 2-TR	DEMOLISH/REMOVE
R-4	N/A	NOPB	GALVEZ NO.3 1-TRACK	DEMOLISH/REMOVE
R-5	N/A	NOPB	RAILROAD	NOT IMPACTED BY PROJECT
M-1	M-1	NOLA	MISC. UTILITY WORK IN STREETS	NEW INSTALLATION
S-10	N/A	S&WB	JORDAN AVE STORM DRAIN	NOT IMPACTED BY PROJECT
S-11	N/A	S&WB	SEWER LIFT STA/LINES SURKOTE DR/N. GALVEZ	DEMOLISH/REMOVE
G-3	G-5	NOPSI	16" DIA GAS MAIN	DEMOLISH/REMOVE

FOC-1
R-2
RIGHT OF WAY - SHIP LOCK AND BARGE LOCK
R-4
GALVEZ STREET WHARF
(TO BE DEMOLISHED)
R-3
EXISTING TURNING BASIN @ EL.-31.0
C/L NEW LOCK AND CHANNEL
C/L UTILITY TRENCH
600'
400'
84+51.81
196°15'47.9"
E-15
160°11'42.9"
80+88.60
S-9
B-3&R-1
W.P. 2
NEW CHANNEL C/L
EXISTING CHANNEL C/L
40'
225'
E-10
E-11&E-12
E-13
S-8
W-6
S-7
C/L NEW FLORIDA AVE BR.
C/L EXISTING FLA. AVE. BR.
T-10
105°14'33.3"
E-14
74+37.26
173°53'24.1"
70+50.66
99°
102°51'39.7"
E-15
SURKOTE RD.
S-11
MW-1
MW-1
56+92.32
JORDAN AVE.
196°24'31.1"
195°52'47.3"
STA. 66+65 (APPROX.)
69+04.89
G-3
S-10
D BARGE LOCK
N. MIRO ST.
N. TONTI ST.
N. ROCHEBLAVE ST.
N. DURGENOIS ST.
N. LAW ST.
N. LAUSAT ST.
NDE ST.
SCALE: 1" = 100'
100' 0 100' 200' 300' 400'

MISSISSIPPI RIVER - GULF OUTLET
NEW LOCK AND CONNECTING CHANNELS
(INDUSTRIAL CANAL LOCK REPLACEMENT)
FEASIBILITY STUDY
NORTH OF CLAIBORNE AVE.
EXISTING CHANNEL

U.S. ARMY ENGINEER DISTRICT, NEW ORLEANS
CORPS OF ENGINEERS
NEW ORLEANS, LOUISIANA

DESIGNED BY: X DRAWN BY: X CHECKED BY: X	PLOT SCALE: 100 DATE: X	PLOT DATE: X	CADD FILE: GENPLR6.dgn FILE NO. H-2-40392

PLATE B-106

5 4 3 2

EXISTING FACILITIES

ITEM DESIGNATION	BEFORE/AFTER ITEM DESIGNATION	FACILITY OWNER	FACILITY TYPE	DISPOSITION
S-7	S-4	S&WB	66" DIA FORCED SEWER MAIN	DEMOLISH/REMOVE
E-10	E-6	S&WB	2-15KV 25HZ FEEDER	DEMOLISH/REMOVE
E-11	E-7	S&WB	2-15KV 25HZ FEEDER	DEMOLISH/REMOVE
W-6	W-5	S&WB	48" DIA WATER MAIN	DEMOLISH/REMOVE
S-8	S-5	S&WB	54" DIA FORCED SEWER MAIN	DEMOLISH/REMOVE
E-12	E-8	S&WB	2-15KV 25HZ FEEDER	DEMOLISH/REMOVE
E-13	E-9	NOPSI	2-24KV PRIM IN 6"CASE	DEMOLISH/REMOVE
E-14	N/A	NOPSI	POWER CABLES	DEMOLISH/REMOVE
S-9	N/A	S&WB	FLORIDA AVE. 45' WIDE CONCRETE SIPHON	NOT IMPACTED BY PROJECT
B-3	N/A	PNO	FLORIDA AVE BRIDGE (VEHICULAR)	NOT IMPACTED BY PROJECT
R-1	N/A	PNO	FLORIDA AVE BRIDGE (RAILROAD)	NOT IMPACTED BY PROJECT
E-15	N/A	LP&L	AERIAL TRANSMISSION LINES	NOT IMPACTED BY PROJECT
T-10	N/A	NOPSI	COMMUNICATION CABLES	DEMOLISH/REMOVE
FOC-1	N/A	WT NOPB	FIBER OPTIC LINE	NOT IMPACTED BY PROJECT

EXISTING FACILITIES

ITEM DESIGNATION	BEFORE/AFTER ITEM DESIGNATION	FACILITY OWNER	FACILITY TYPE	DISPOSITION
R-2	N/A	NOPB	MAIN LINE	NOT IMPACTED BY PROJECT
R-3	N/A	NOPB	GALVEZ MARGINAL 2-TR	DEMOLISH/REMOVE
R-4	N/A	NOPB	GALVEZ NO.3 1-TRACK	DEMOLISH/REMOVE
R-5	N/A	NOPB	RAILROAD	NOT IMPACTED BY PROJECT
M-1	M-1	NOLA	MISC. UTILITY WORK IN STREETS	NEW INSTALLATION
S-10	N/A	S&WB	JORDAN AVE STORM DRAIN	NOT IMPACTED BY PROJECT
S-11	N/A	S&WB	SEWER LIFT STA/LINES SURKOTE DR/N. GALVEZ	DEMOLISH/REMOVE
G-3	G-5	NOPSI	18" DIA GAS MAIN	DEMOLISH/REMOVE

FOC-1
R-2
R-5
MW-1
RIGHT OF WAY - SHIP LOCK AND BARGE LOCK
R-4
GALVEZ STREET WHARF
(TO BE DEMOLISHED)
EXISTING TURNING
BASIN @ EL.-31.0
C/L UTILITY TRENCH
600'
400'
440'
R-3
C/L NEW LOCK AND CHANNEL
W.P. 2
E-10
E-11&E-12
E-13
S-8
W-6
S-7
C/L NEW FLORIDA AVE BR.
700'
S-11
SURKOTE RD.
99+09.01
102°51'39.7"
MW-1
56+92.32
JORDAN AVE.
196°24'31.1"
195°52'47.3"
STA. 66+65 (APPROX.)
69+04.89
65'
RIGHT OF WAY - SHIP LOCK AND BARGE LOCK
G-3
S-10
N. GAVEZ ST.
N. MIRO ST.
N. TONTI ST.
N. ROCHEBLAVE ST.
N. DURGENOIS ST.
N. LAW ST.
N. LAUSAT ST.
DESLONDE ST.
SCALE: 1" = 100'
100' 0 100' 200' 300' 400'

D FACILITIES

	FACILITY TYPE	DISPOSITION
	1-20" DIA WATER MAIN	NEW INSTALLATION
	2-24KV FEEDERS	NEW INSTALLATION
	SUBMARINE CABLES	NEW INSTALLATION
	CABLE TV	NEW INSTALLATION
	ST. CLAUDE AVE. BRIDGE	DEMOLISH/REMOVE 1 NEW BRIDGE 1
	DETOUR ROUTES	SEE PLATE
	8.8 MGD SEWAGE PUMP STATION 14 CFS.	NOT IMPACTED BY PROJECT
	JORDAN AVE STORM DRAIN	NOT IMPACTED BY PROJECT

RIGHT OF WAY - SHIP LOCK
RIGHT OF WAY - BARGE LOCK
C/L DISPOSAL TRENCH CORRIDOR "A"
EXISTING FLOOD PROTECTION
EL. -36.0
EXISTING FLOOD PROTECTION
RIGHT OF WAY - BARGE LOCK
RIGHT OF WAY - SHIP LOCK
JOURDAN ST.
DESLONDE ST.
ROYAL ST.
DAUPHINE ST.
BIENVILLE ST.
N. RAMPART ST.
ST. CLAUDE AVE.
MARAIS ST.
S-1
S-10

NEW CHANNEL PLAN

SCALE: 1" = 100'

NOTE:
CHANNEL MINIMUM SECTION SHOWN.
ASSUME NATURAL GROUND @ EL. 2.0

SCALE: 1" = 100'

100' 0 100' 200' 300' 400'

MISSISSIPPI RIVER - GULF OUTLET
NEW LOCK AND CONNECTING CHANNELS
(INDUSTRIAL CANAL LOCK REPLACEMENT)
FEASIBILITY STUDY
NORTH OF CLAIBORNE AVE.
PROPOSED RELOCATIONS

U.S. ARMY ENGINEER DISTRICT, NEW ORLEANS
CORPS OF ENGINEERS
NEW ORLEANS, LOUISIANA

DESIGNED BY:	PLOT SCALE: 100	PLOT DATE:	ENGD FILE: GENPLR15.dgn
DRAWN BY:			FILE NO. H-2-40392
CHECKED BY:	DATE:		

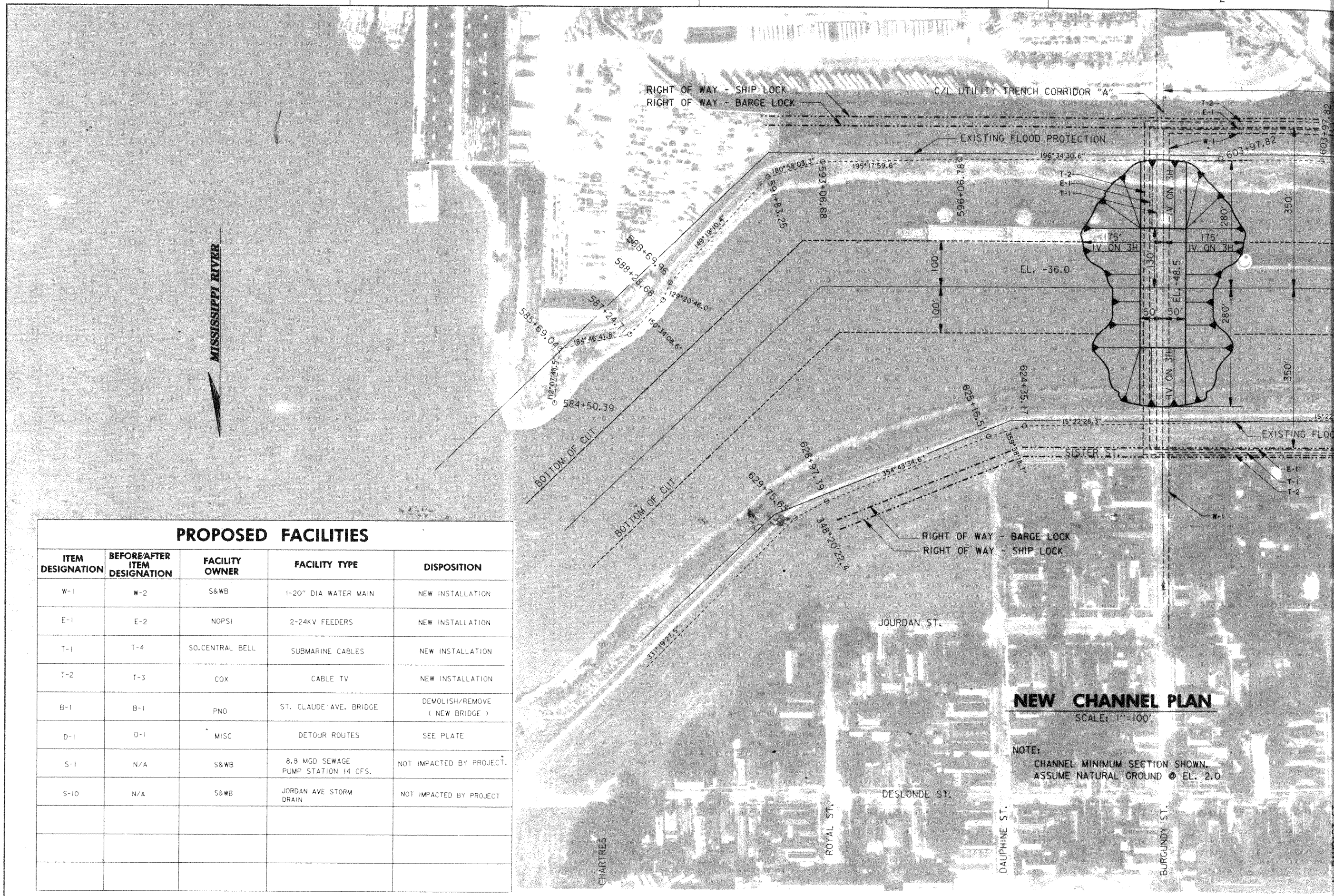

PROPOSED FACILITIES

ITEM DESIGNATION	BEFORE/AFTER ITEM DESIGNATION	FACILITY OWNER	FACILITY TYPE	DISPOSITION
W-1	W-2	S&WB	1-20" DIA WATER MAIN	NEW INSTALLATION
E-1	E-2	NOPSI	2-24KV FEEDERS	NEW INSTALLATION
T-1	T-4	SO.CENTRAL BELL	SUBMARINE CABLES	NEW INSTALLATION
T-2	T-3	COX	CABLE TV	NEW INSTALLATION
B-1	B-1	PNO	ST. CLAUDE AVE. BRIDGE	DEMOLISH/REMOVE (NEW BRIDGE)
D-1	D-1	MISC	DETOUR ROUTES	SEE PLATE
S-1	N/A	S&WB	8.8 MGD SEWAGE PUMP STATION 14 CFS.	NOT IMPACTED BY PROJECT.
S-10	N/A	S&WB	JORDAN AVE STORM DRAIN	NOT IMPACTED BY PROJECT

NEW CHANNEL PLAN

SCALE: 1"=100'

NOTE:
CHANNEL MINIMUM SECTION SHOWN.
ASSUME NATURAL GROUND @ EL. 2.0

SCALE: 1" = 100'

100' 0 100' 200' 300'

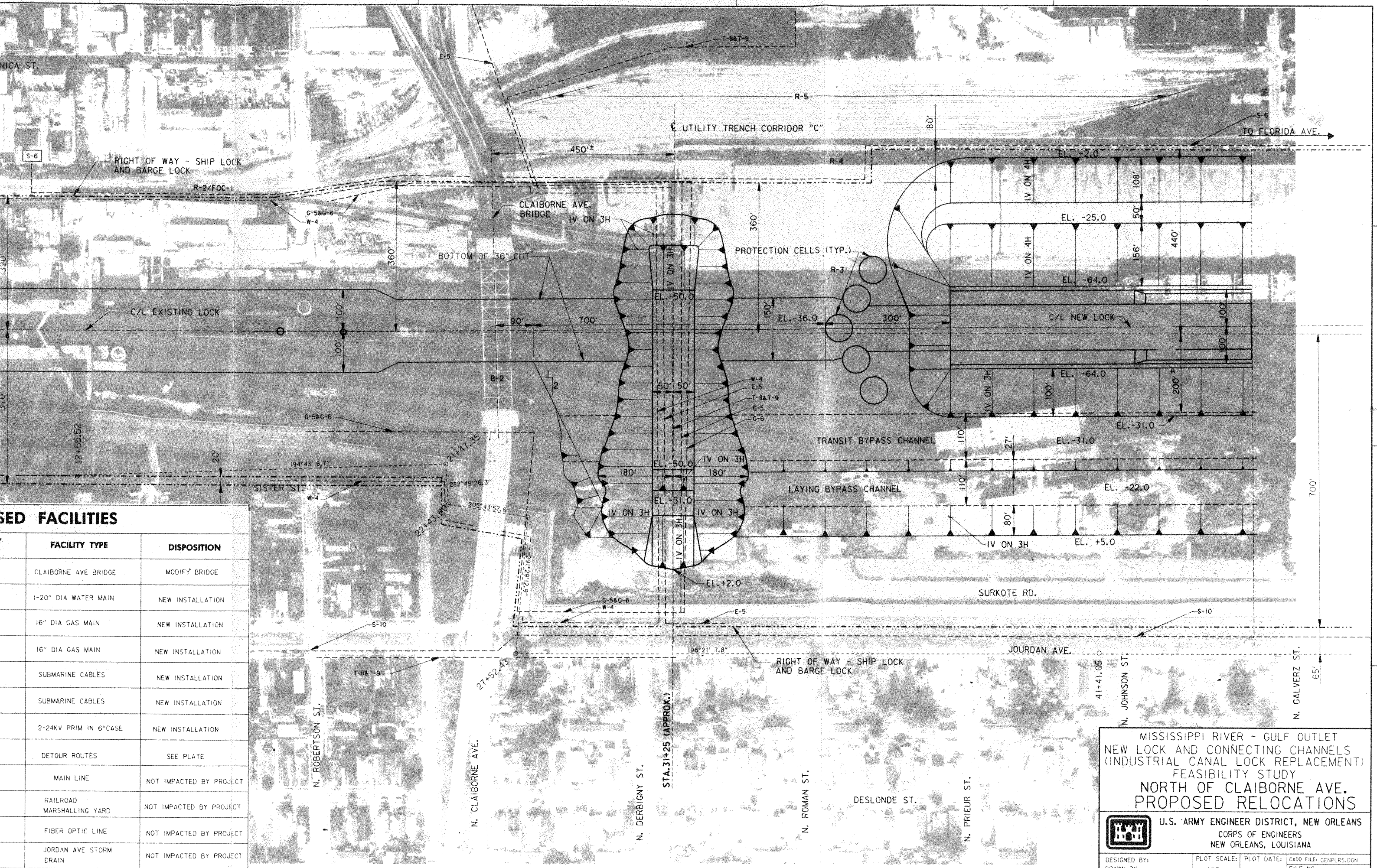

SED FACILITIES

	FACILITY TYPE	DISPOSITION
	CLAIBORNE AVE BRIDGE	MODIFY BRIDGE
	1-20" DIA WATER MAIN	NEW INSTALLATION
	16" DIA GAS MAIN	NEW INSTALLATION
	16" DIA GAS MAIN	NEW INSTALLATION
	SUBMARINE CABLES	NEW INSTALLATION
	SUBMARINE CABLES	NEW INSTALLATION
	2-24KV PRIM IN 6"CASE	NEW INSTALLATION
	DETOUR ROUTES	SEE PLATE
	MAIN LINE	NOT IMPACTED BY PROJECT
	RAILROAD MARSHALLING YARD	NOT IMPACTED BY PROJECT
	FIBER OPTIC LINE	NOT IMPACTED BY PROJECT
	JORDAN AVE STORM DRAIN	NOT IMPACTED BY PROJECT

MISSISSIPPI RIVER - GULF OUTLET
NEW LOCK AND CONNECTING CHANNELS
(INDUSTRIAL CANAL LOCK REPLACEMENT)
FEASIBILITY STUDY
NORTH OF CLAIBORNE AVE.
PROPOSED RELOCATIONS

U.S. ARMY ENGINEER DISTRICT, NEW ORLEANS
CORPS OF ENGINEERS
NEW ORLEANS, LOUISIANA

DESIGNED BY:	PLOT SCALE:	PLOT DATE:	CADD FILE: CENPLR5.DGN
DRAWN BY:	100		FILE NO.
CHECKED BY:	DATE:		

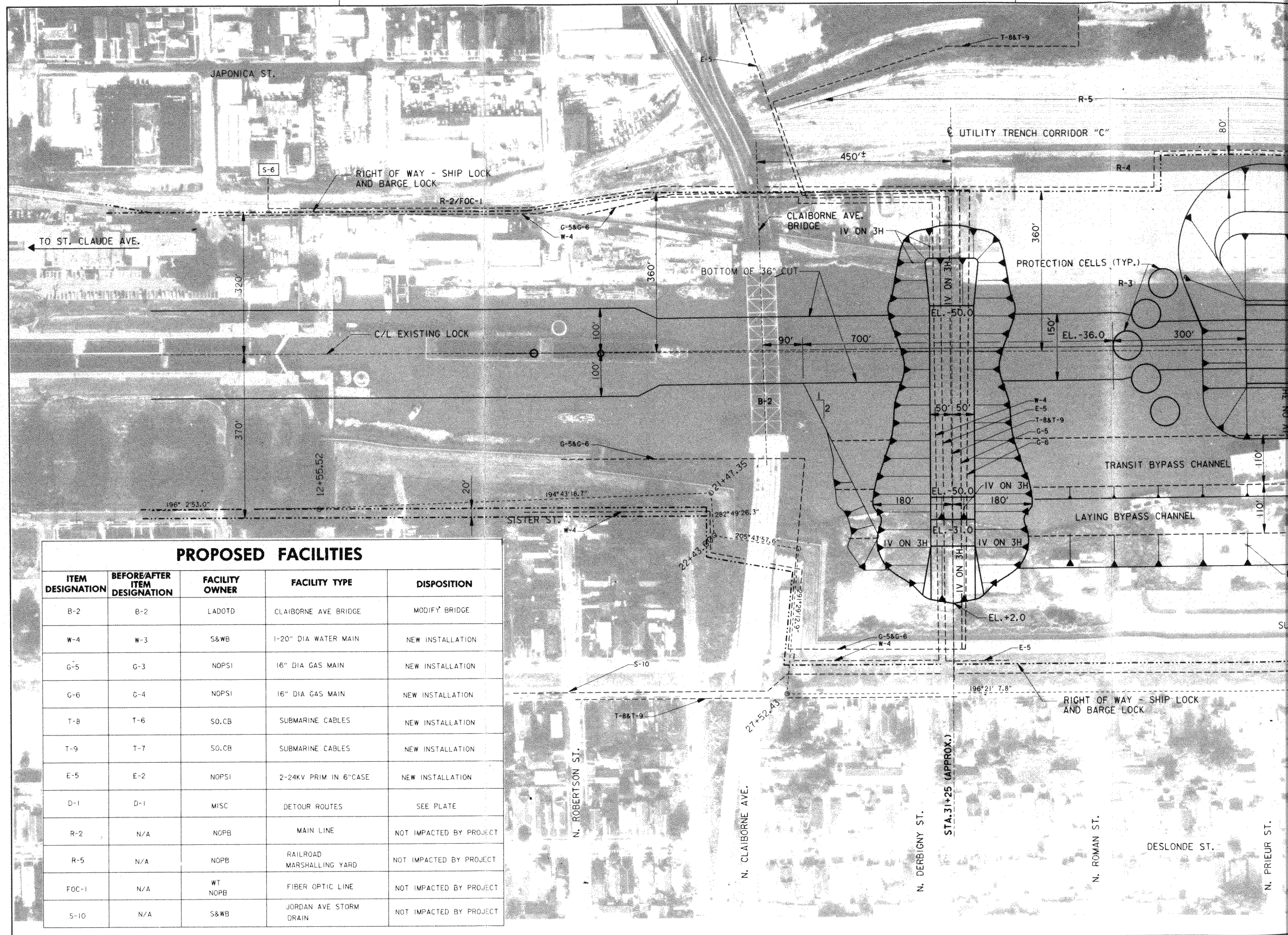

PROPOSED FACILITIES

ITEM DESIGNATION	BEFORE/AFTER ITEM DESIGNATION	FACILITY OWNER	FACILITY TYPE	DISPOSITION
B-2	B-2	LADOTD	CLAIBORNE AVE BRIDGE	MODIFY BRIDGE
W-4	W-3	S&WB	1-20" DIA WATER MAIN	NEW INSTALLATION
G-5	G-3	NOPSI	16" DIA GAS MAIN	NEW INSTALLATION
G-6	G-4	NOPSI	16" DIA GAS MAIN	NEW INSTALLATION
T-8	T-6	SO.CB	SUBMARINE CABLES	NEW INSTALLATION
T-9	T-7	SO.CB	SUBMARINE CABLES	NEW INSTALLATION
E-5	E-2	NOPSI	2-24KV PRIM IN 6"CASE	NEW INSTALLATION
D-1	D-1	MISC	DETOUR ROUTES	SEE PLATE
R-2	N/A	NOPB	MAIN LINE	NOT IMPACTED BY PROJECT
R-5	N/A	NOPB	RAILROAD MARSHALLING YARD	NOT IMPACTED BY PROJECT
FOC-1	N/A	WT NOPB	FIBER OPTIC LINE	NOT IMPACTED BY PROJECT
S-10	N/A	S&WB	JORDAN AVE STORM DRAIN	NOT IMPACTED BY PROJECT

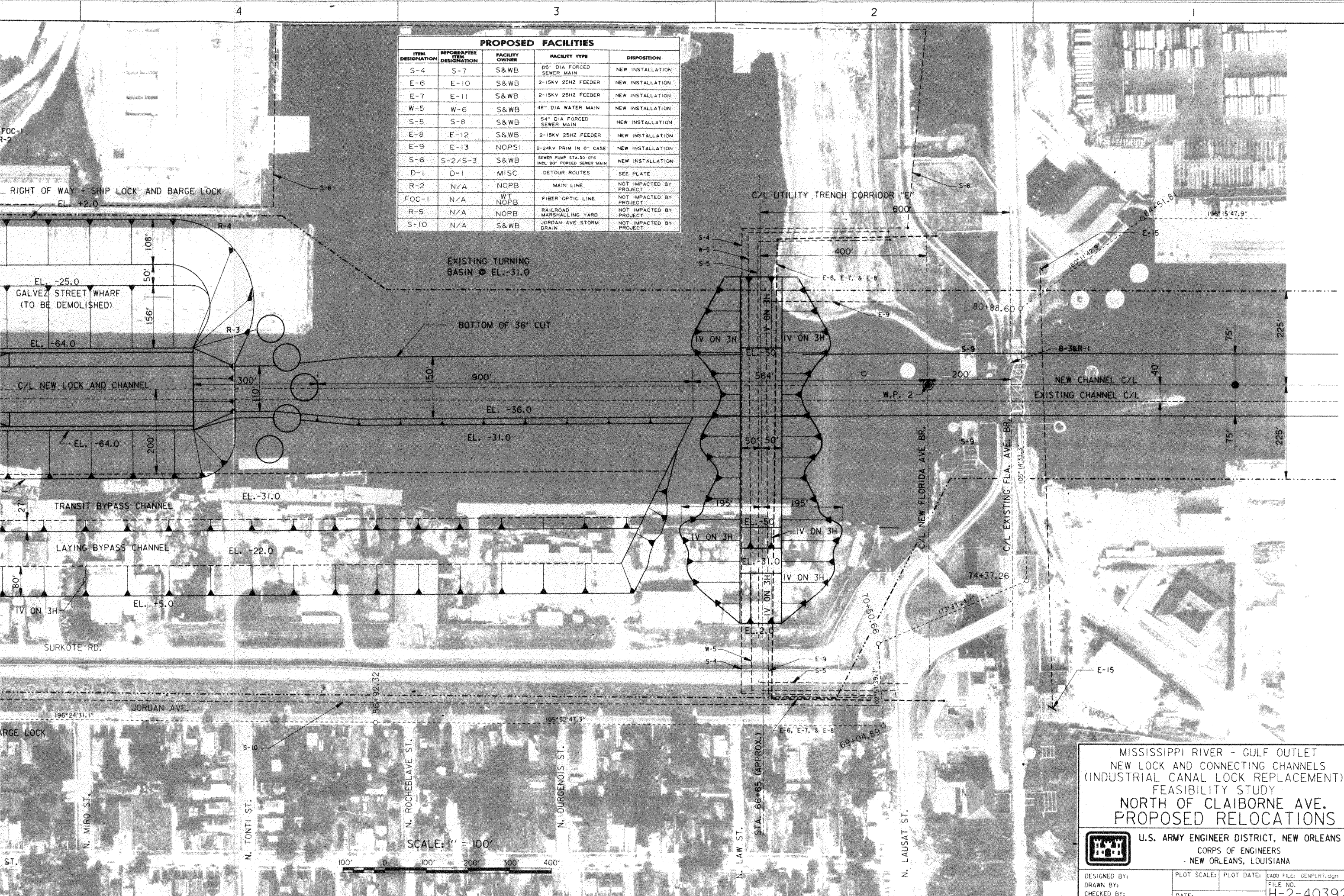

PROPOSED FACILITIES

ITEM DESIGNATION	BEFORE/AFTER ITEM DESIGNATION	FACILITY OWNER	FACILITY TYPE	DISPOSITION
S-4	S-7	S&WB	66" DIA FORCED SEWER MAIN	NEW INSTALLATION
E-6	E-10	S&WB	2-15KV 25HZ FEEDER	NEW INSTALLATION
E-7	E-11	S&WB	2-15KV 25HZ FEEDER	NEW INSTALLATION
W-5	W-6	S&WB	48" DIA WATER MAIN	NEW INSTALLATION
S-5	S-8	S&WB	54" DIA FORCED SEWER MAIN	NEW INSTALLATION
E-8	E-12	S&WB	2-15KV 25HZ FEEDER	NEW INSTALLATION
E-9	E-13	NOPSI	2-24KV PRIM IN 6" CASE	NEW INSTALLATION
S-6	S-2/S-3	S&WB	SEWER PUMP STA.30 CFS INCL 20" FORCED SEWER MAIN	NEW INSTALLATION
D-1	D-1	MISC	DETOUR ROUTES	SEE PLATE
R-2	N/A	NOPB	MAIN LINE	NOT IMPACTED BY PROJECT
FOC-1	N/A	WT NOPB	FIBER OPTIC LINE	NOT IMPACTED BY PROJECT
R-5	N/A	NOPB	RAILROAD MARSHALLING YARD	NOT IMPACTED BY PROJECT
S-10	N/A	S&WB	JORDAN AVE STORM DRAIN	NOT IMPACTED BY PROJECT

MISSISSIPPI RIVER - GULF OUTLET
NEW LOCK AND CONNECTING CHANNELS
(INDUSTRIAL CANAL LOCK REPLACEMENT)
FEASIBILITY STUDY

NORTH OF CLAIBORNE AVE.
PROPOSED RELOCATIONS

U.S. ARMY ENGINEER DISTRICT, NEW ORLEANS
CORPS OF ENGINEERS
NEW ORLEANS, LOUISIANA

DESIGNED BY:	PLOT SCALE:	PLOT DATE:	CADD FILE: GENPLR7.dgn
DRAWN BY:			FILE NO.
CHECKED BY:	DATE:		H-2-40392

PLATE B-109

PROPOSED FACILITIES

ITEM DESIGNATION	BEFORE/AFTER ITEM DESIGNATION	FACILITY OWNER	FACILITY TYPE	DISPOSITION
S-4	S-7	S&WB	66" DIA FORCED SEWER MAIN	NEW INSTALLATION
E-6	E-10	S&WB	2-15KV 25HZ FEEDER	NEW INSTALLATION
E-7	E-11	S&WB	2-15KV 25HZ FEEDER	NEW INSTALLATION
W-5	W-6	S&WB	48" DIA WATER MAIN	NEW INSTALLATION
S-5	S-8	S&WB	54" DIA FORCED SEWER MAIN	NEW INSTALLATION
E-8	E-12	S&WB	2-15KV 25HZ FEEDER	NEW INSTALLATION
E-9	E-13	NOPSI	2-24KV PRIM IN 6" CASE	NEW INSTALLATION
S-6	S-2/S-3	S&WB	SEWER PUMP STA.30 CFS INCL 20" FORCED SEWER MAIN	NEW INSTALLATION
D-1	D-1	MISC	DETOUR ROUTES	SEE PLATE
R-2	N/A	NOPB	MAIN LINE	NOT IMPACTED BY PROJECT
FOC-1	N/A	WT NOPB	FIBER OPTIC LINE	NOT IMPACTED BY PROJECT
R-5	N/A	NOPB	RAILROAD MARSHALLING YARD	NOT IMPACTED BY PROJECT
S-10	N/A	S&WB	JORDAN AVE STORM DRAIN	NOT IMPACTED BY PROJECT

FOC-1
R-2
R-5
FOC-1
R-2
S-6
RIGHT OF WAY - SHIP LOCK AND BARGE LOCK
EL. +2.0
R-4
GALVEZ STREET WHARF
(TO BE DEMOLISHED)
1V ON 4H
108'
50'
EL. -25.0
GALVEZ STREET WHARF
(TO BE DEMOLISHED)
156'
1V ON 4H
R-3
EL. -64.0
440'
C/L NEW LOCK AND CHANNEL
200'
300'
110'
1V ON 3H
100'
EL. -64.0
200'
EL. -31.0
110'
27'
TRANSIT BYPASS CHANNEL
700'
110'
LAYING BYPASS CHANNEL
80'
1V ON 3H
EL. +5.0
EL. -22.0
EL.-31.0
SURKOTE RD.
STA. 45+21 (APPROX.)
JORDAN AVE.
196°24'31.1"
195°52'47.3"
RIGHT OF WAY - SHIP LOCK AND BARGE LOCK
65'
S-10
56+92.32
EXISTING TURNING
BASIN @ EL.-31.0
BOTTOM OF 36' CUT
150'
900'
EL. -36.0
EL. -31.0
C/L UTILITY TRENCH CORRIDOR "E"
600'
400'
S-4
W-5
S-5
E-6, E-7, & E-8
E-9
1V ON 3H
1V ON 3H
EL. -5.0
564'
50'
50'
195'
195'
EL. -5.0
1V ON 3H
1V ON 3H
EL.-31.0
1V ON 3H
1V ON 3H
EL. 2.0
W-5
S-4
E-9
S-5
E-6, E-7, & E-8
S-6
S-9
200'
W.P. 2
S-9
C/L NEW FLORIDA AVE BR.
70+50.66
173°33'24.1"
102°51'19.7"
69+04.89
74+3
STA. 66+65 (APPROX.)
N. GAVEZ ST.
N. MIRO ST.
N. TONTI ST.
N. ROCHEBLAVE ST.
N. DUROENOIS ST.
N. LAW ST.
N. LAUSAT ST.
DESLONDE ST.
SCALE: 1" = 100'
100' 0 100' 200' 300' 400'

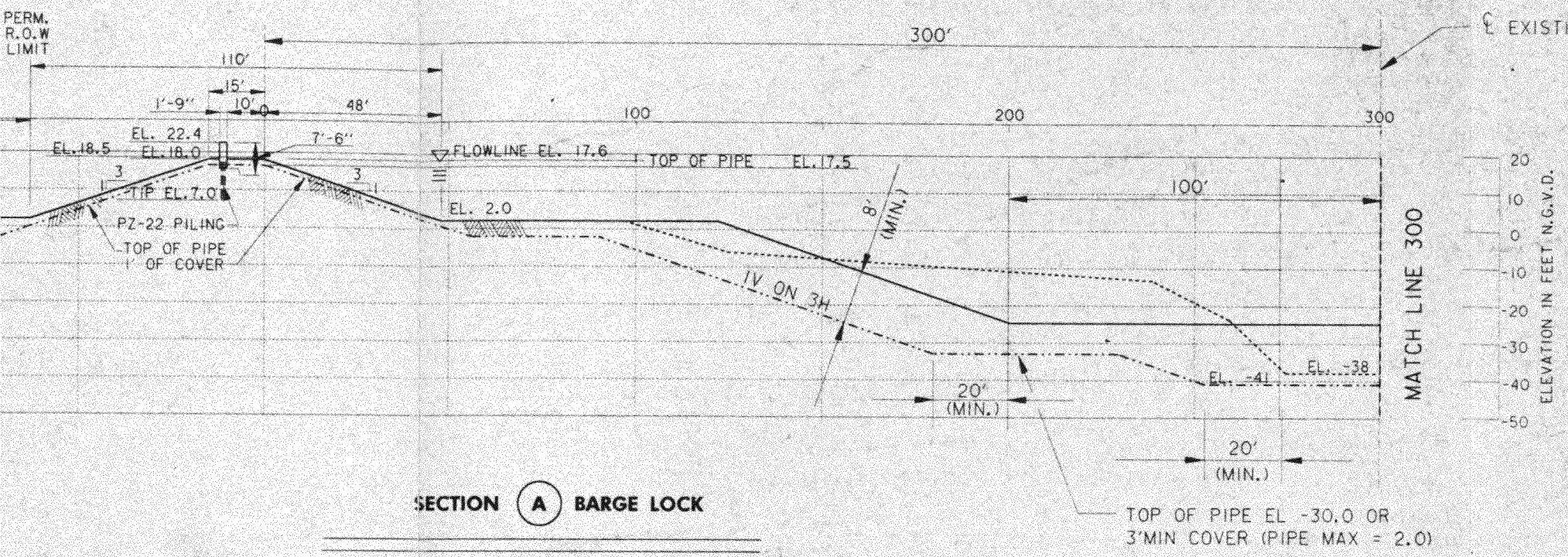

SECTION (A) BARGE LOCK

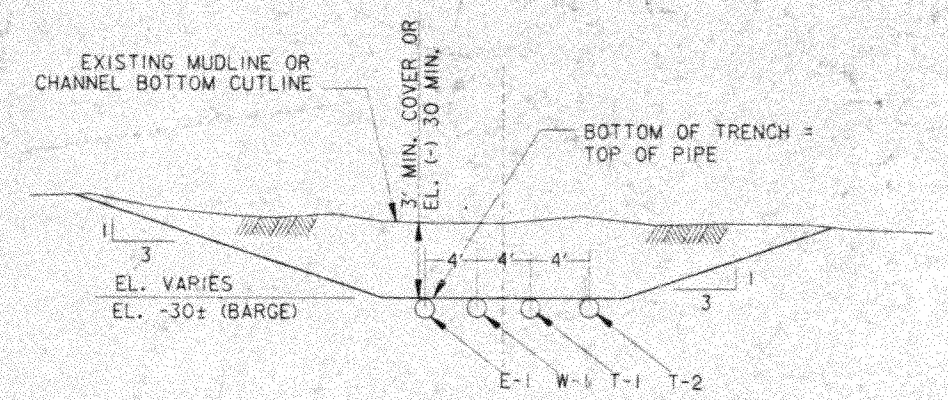

SECTION (F) BARGE LOCK

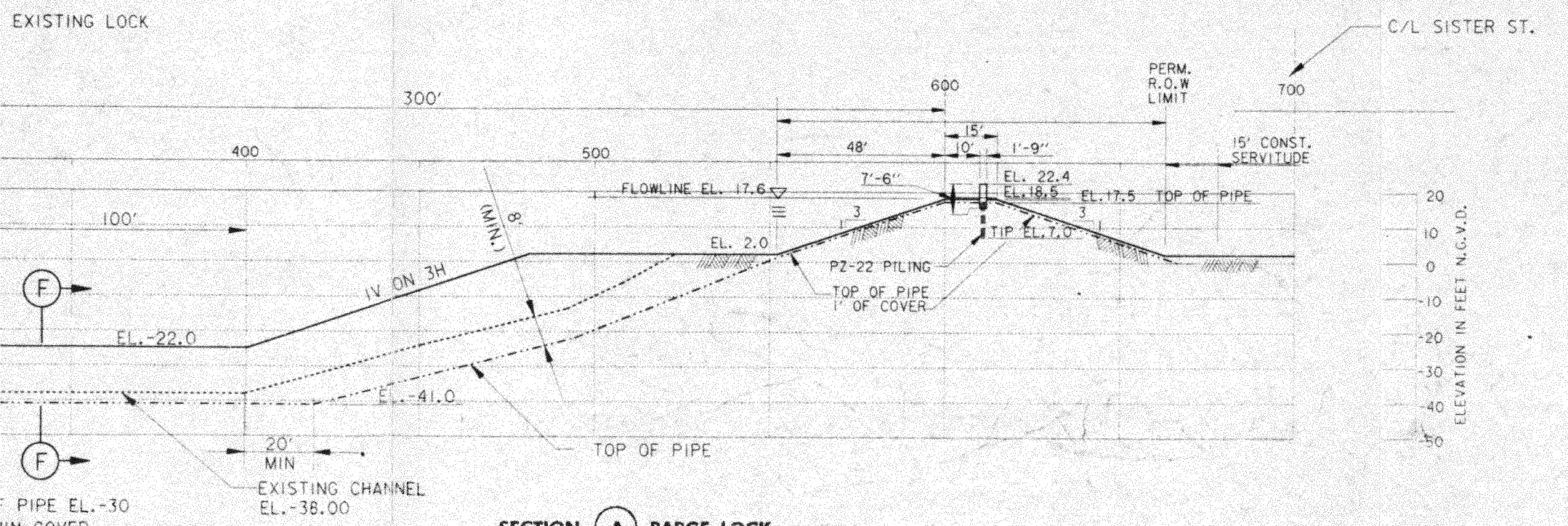

SECTION (A) BARGE LOCK

SCALE: 1" = 20'

20 0 20 40 60 80

MISSISSIPPI RIVER - GULF OUTLET
NEW LOCK AND CONNECTING CHANNELS
(INDUSTRIAL CANAL LOCK REPLACEMENT)
FEASIBILITY STUDY
BARGE CHANNEL

UTILITY RELOCATION CORRIDORS

U.S. ARMY ENGINEER DISTRICT, NEW ORLEANS
CORPS OF ENGINEERS
NEW ORLEANS, LOUISIANA

DESIGNED BY: T.F.P.	PLOT SCALE: 240	PLOT DATE:	CADD FILE: [illegible]	
DRAWN BY: J.E.B.			FILE NO. H-2-40392	
CHECKED BY: A.D.S.K.	DATE: MAY 5, 93			

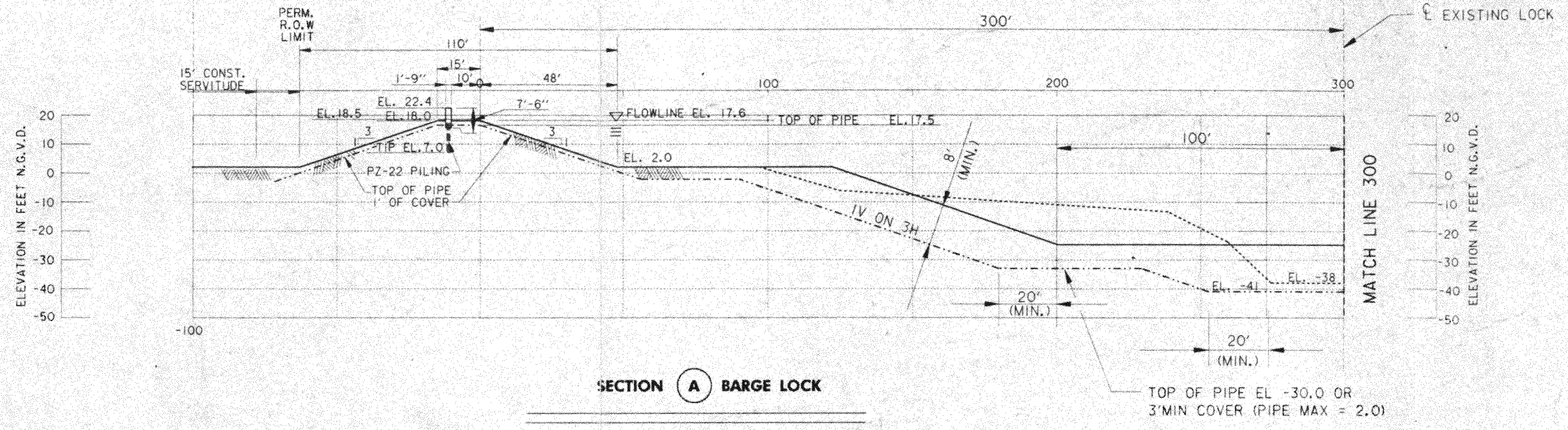

SECTION (A) BARGE LOCK

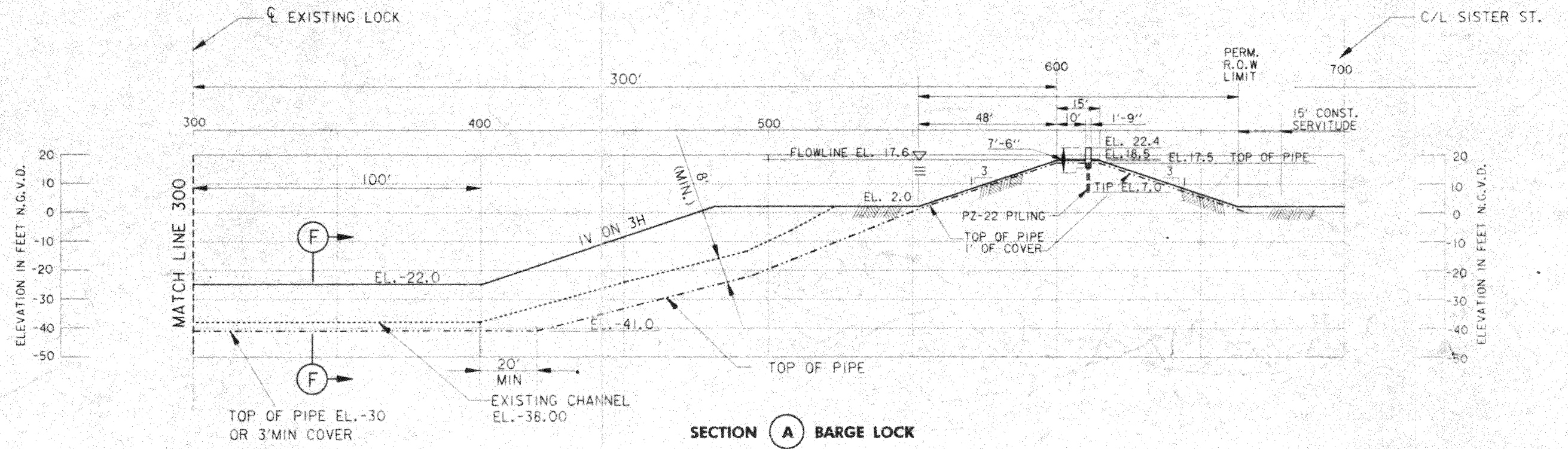

SECTION (A) BARGE LOCK

SCALE: 1" = 20'

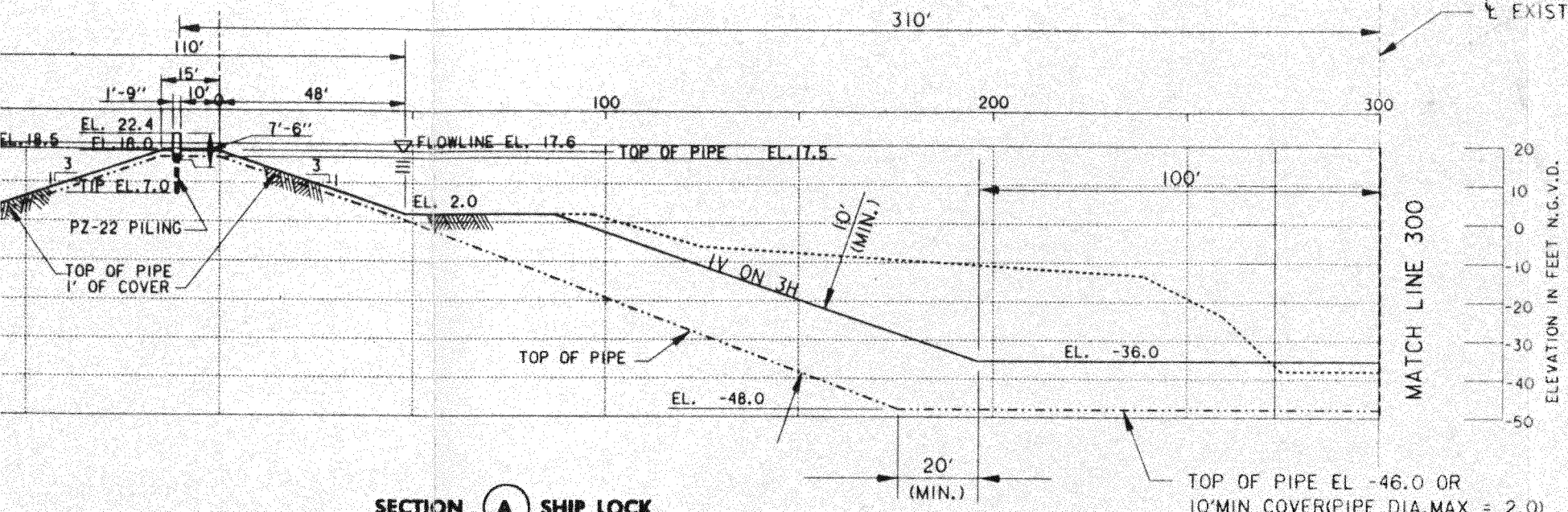

SECTION (A) SHIP LOCK

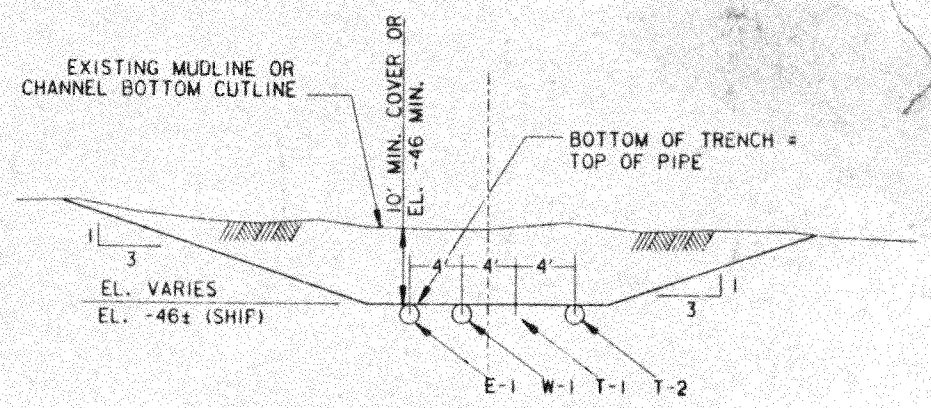

SECTION (F) SHIP LOCK

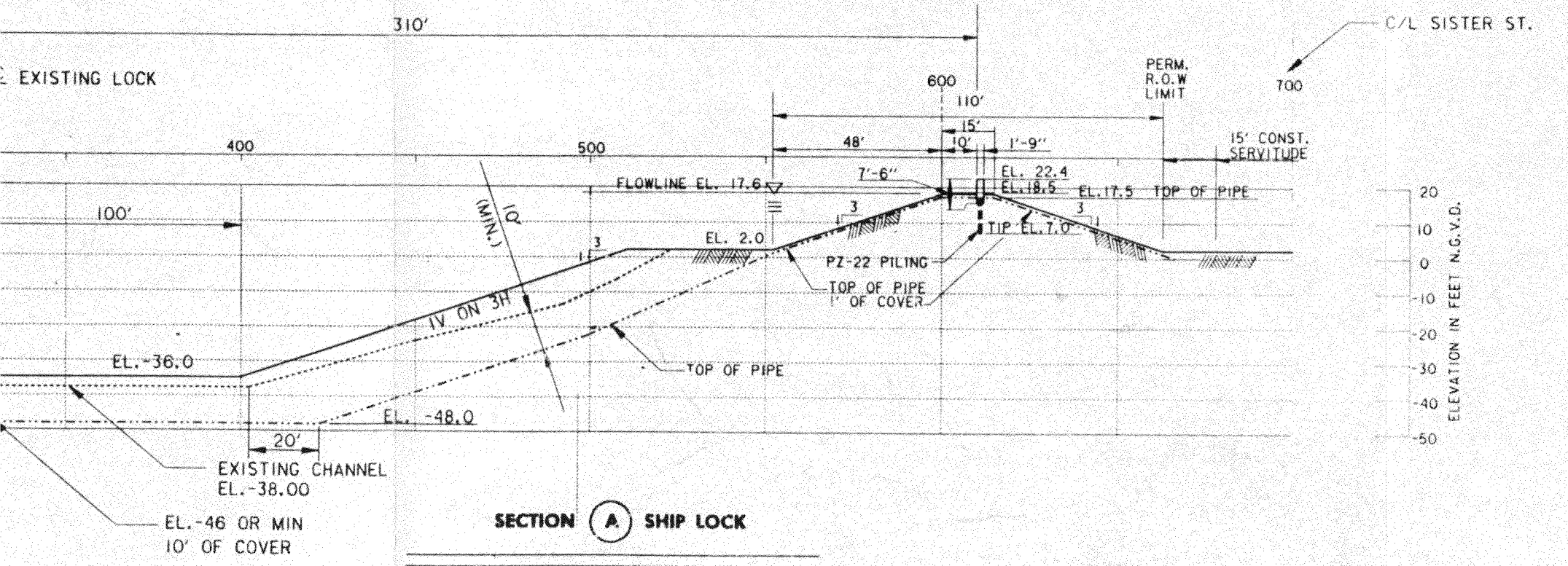

SECTION (A) SHIP LOCK

SCALE: 1" = 20'

20' 0 20' 40' 60' 80'

MISSISSIPPI RIVER - GULF OUTLET
NEW LOCK AND CONNECTING CHANNELS
(INDUSTRIAL CANAL LOCK REPLACEMENT)
FEASIBILITY STUDY
BARGE CHANNEL

UTILITY RELOCATION CORRIDORS

U.S. ARMY ENGINEER DISTRICT, NEW ORLEANS
CORPS OF ENGINEERS
NEW ORLEANS, LOUISIANA

DESIGNED BY:	T.F.P.	PLOT SCALE: 240	PLOT DATE:	CADD FILE: genplt2.dgn
DRAWN BY:	J.E.B.			FILE NO. H-2-40392
CHECKED BY:	A.D.S.X	DATE: MAY 5, 93		

PLATE B-11

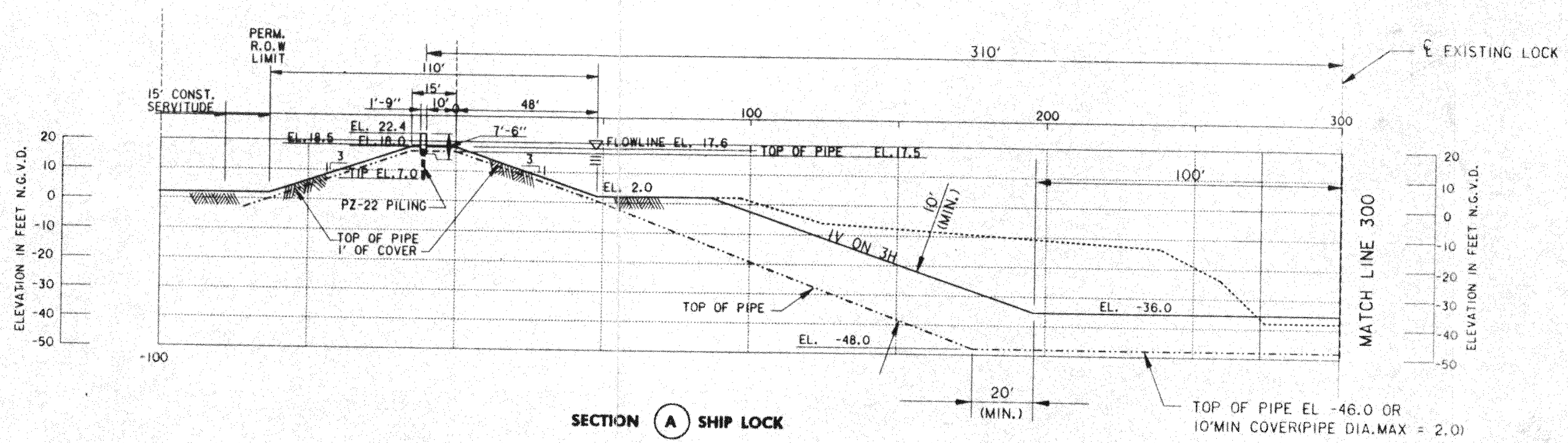

SECTION (A) SHIP LOCK

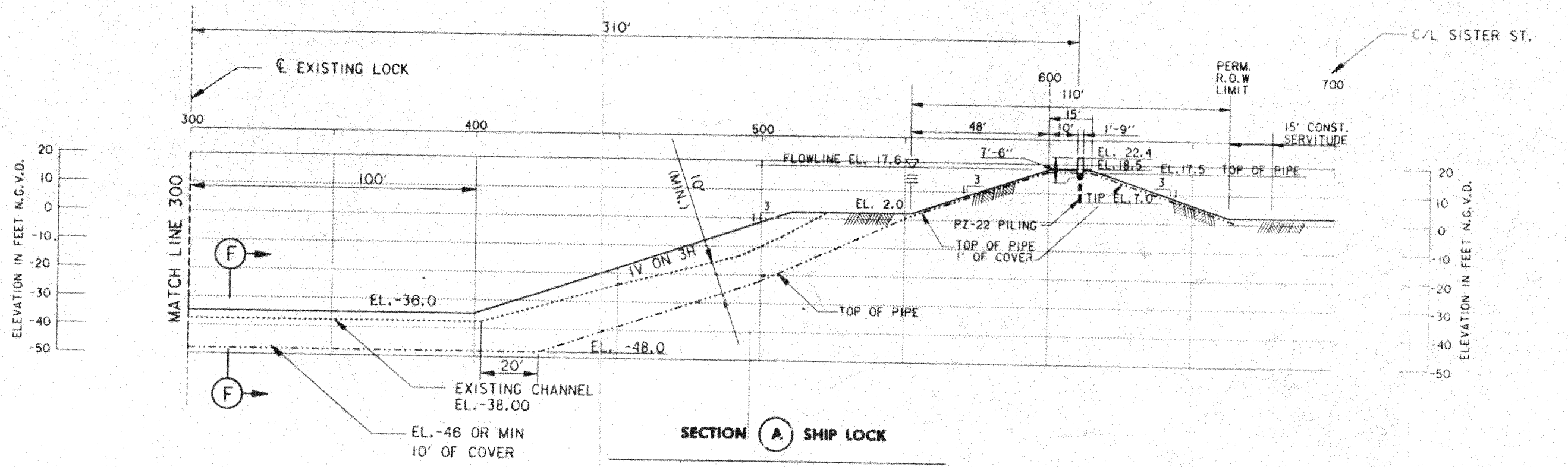

SECTION (A) SHIP LOCK

SCALE: 1" = 20'

20' 0 20' 40' 60' 80'

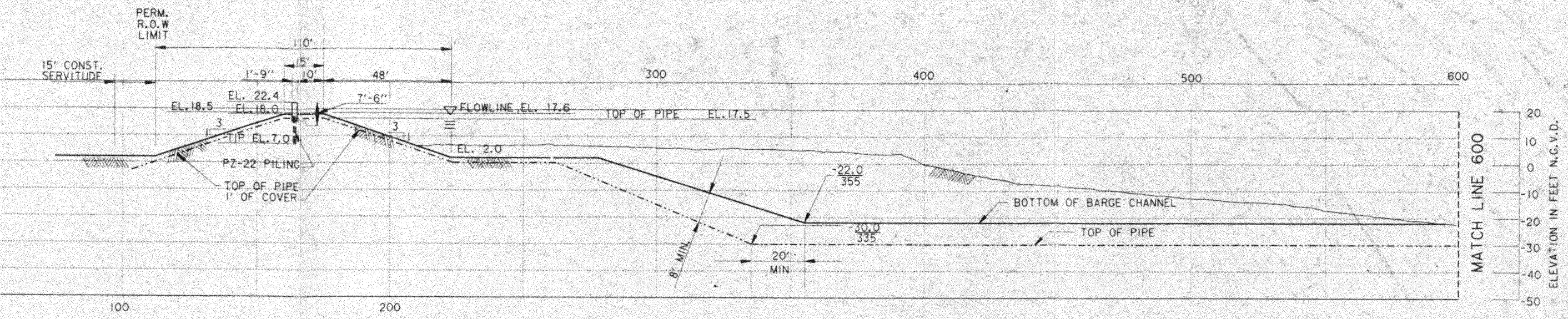

NOTE: GROUND LINE SHOWN IS STA.29+00.00(RANGE 9)

SECTION (C) BARGE LOCK

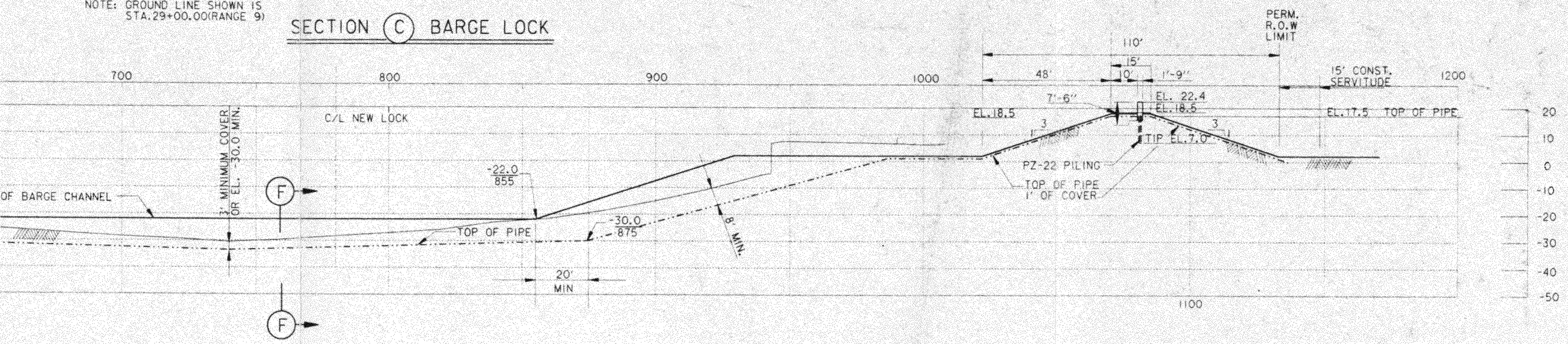

NOTE: GROUND LINE SHOWN IS STA.29+00.00(RANGE 9)

SECTION (C) BARGE LOCK

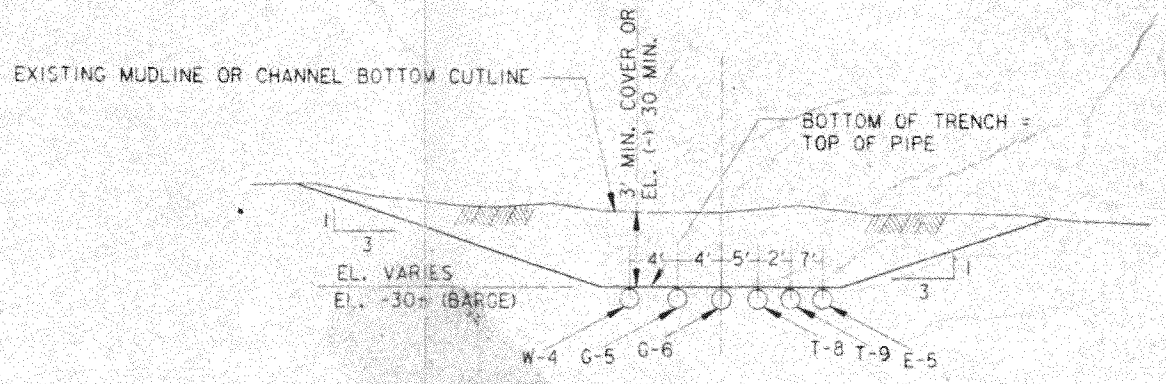

SECTION (F) BARGE LOCK

N.T.S.

SCALE: 1" = 20'

20' 0 20' 40' 60' 80'

MISSISSIPPI RIVER - GULF OUTLET
NEW LOCK AND CONNECTING CHANNELS
(INDUSTRIAL CANAL LOCK REPLACEMENT)
FEASIBILITY STUDY
BARGE CHANNEL

UTILITY RELOCATION CORRIDORS

U.S. ARMY ENGINEER DISTRICT, NEW ORLEANS
CORPS OF ENGINEERS
NEW ORLEANS, LOUISIANA

DESIGNED BY: T.F.P.	PLOT SCALE: 240	PLOT DATE:	CADD FILE: genpln10.dgn
DRAWN BY: J.E.B.			FILE NO. H-2-40392
CHECKED BY: A.D.S.	DATE: MAY 5, 93		

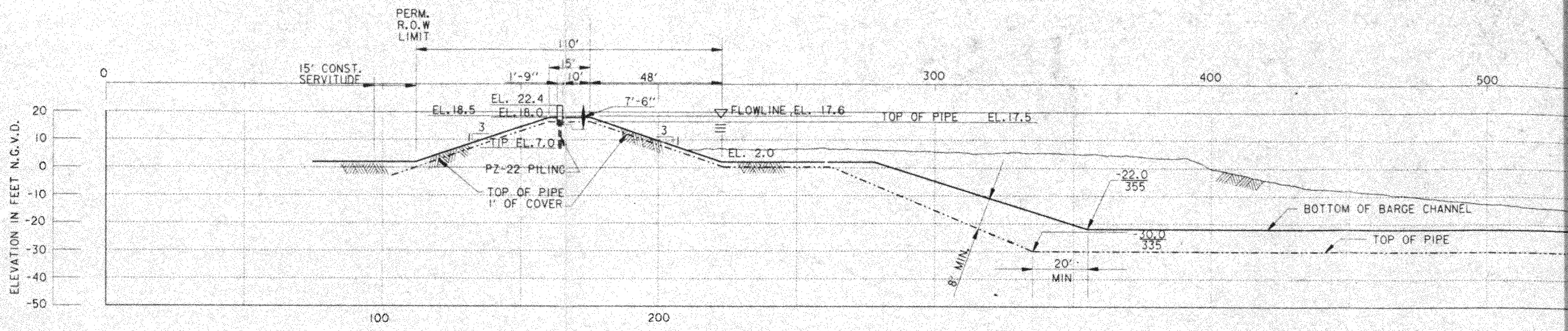

NOTE: GROUND LINE SHOWN IS STA.29+00.00(RANGE 9)

SECTION (C) BARGE LOCK

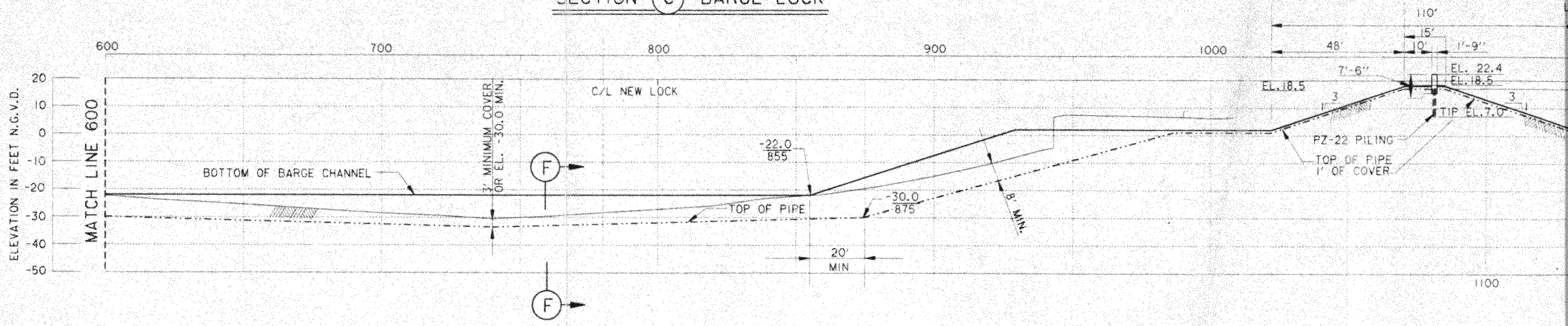

NOTE: GROUND LINE SHOWN IS STA.29+00.00(RANGE 9)

SECTION (C) BARGE LOCK

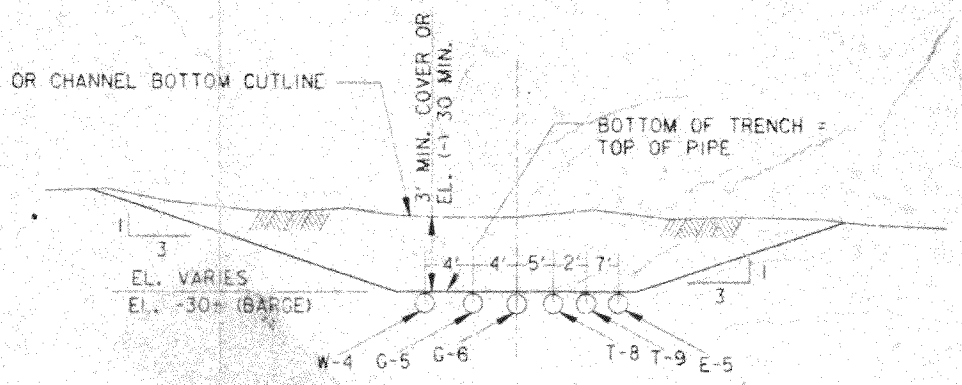

SECTION (F) BARGE LOCK

N.T.S.

SCALE: 1" = 20'

20' 0 20' 40' 60' 80'

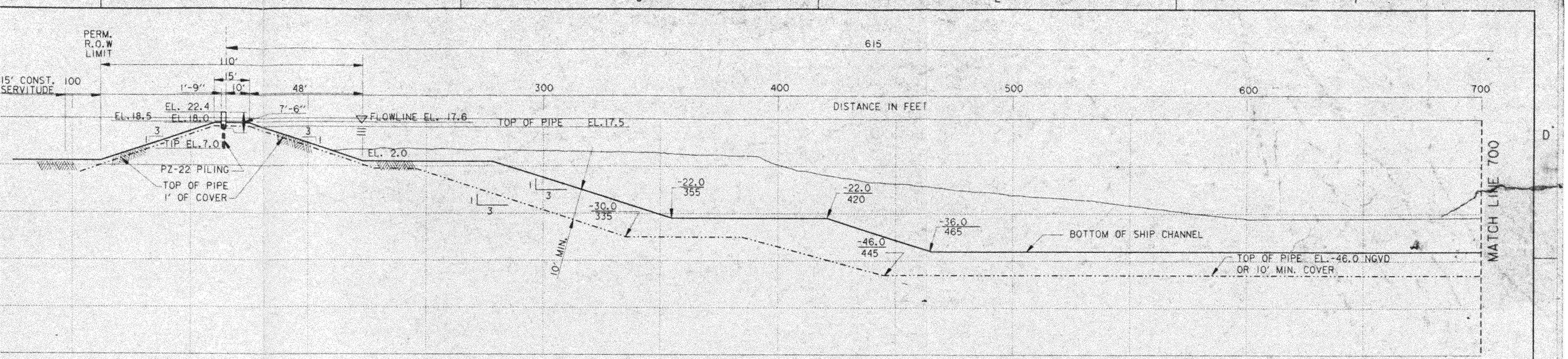

SECTION (C) SHIP LOCK

NOTE: GROUND LINE SHOWN IS STA. 29+00 (RANGE 9)

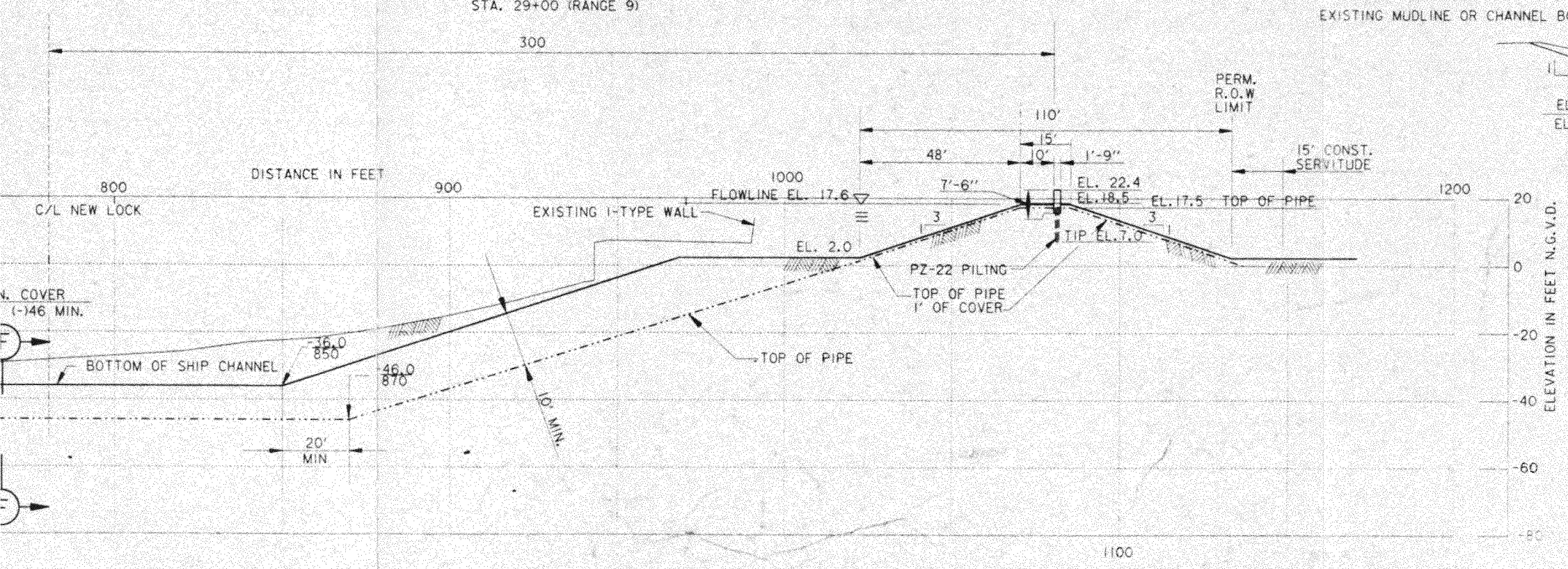

SECTION (C) SHIP LOCK

NOTE: GROUND LINE SHOWN IS STA. 29+00 (RANGE 9)

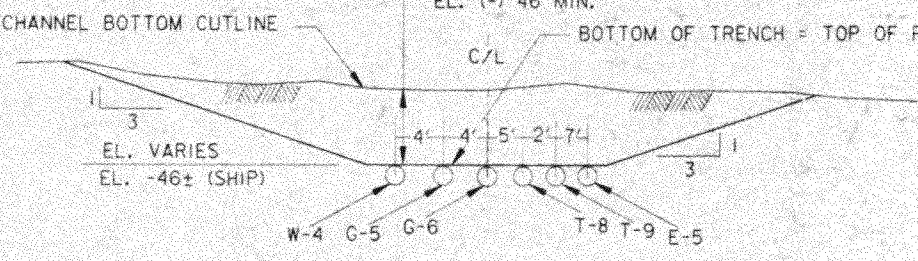

SECTION (F) SHIP LOCK

N.T.S.

SCALE: 1" = 20'

MISSISSIPPI RIVER - GULF OUTLET
NEW LOCK AND CONNECTION CHANNELS
(INDUSTRIAL CANAL LOCK REPLACEMENT)
FEASIBILITY STUDY
SHIP CHANNEL

UTILITY RELOCATION CORRIDORS

U.S. ARMY ENGINEER DISTRICT, NEW ORLEANS
CORPS OF ENGINEERS
NEW ORLEANS, LOUISIANA

DESIGNED BY: T.J.P.	PLOT SCALE: 240	PLOT DATE: X	LADD FILE (DEN,PLAN,DGN)	
DRAWN BY: J.E.B.			FILE NO.	H-2-40392
CHECKED BY: A.D.S.	DATE: JAN. 5, 1993			

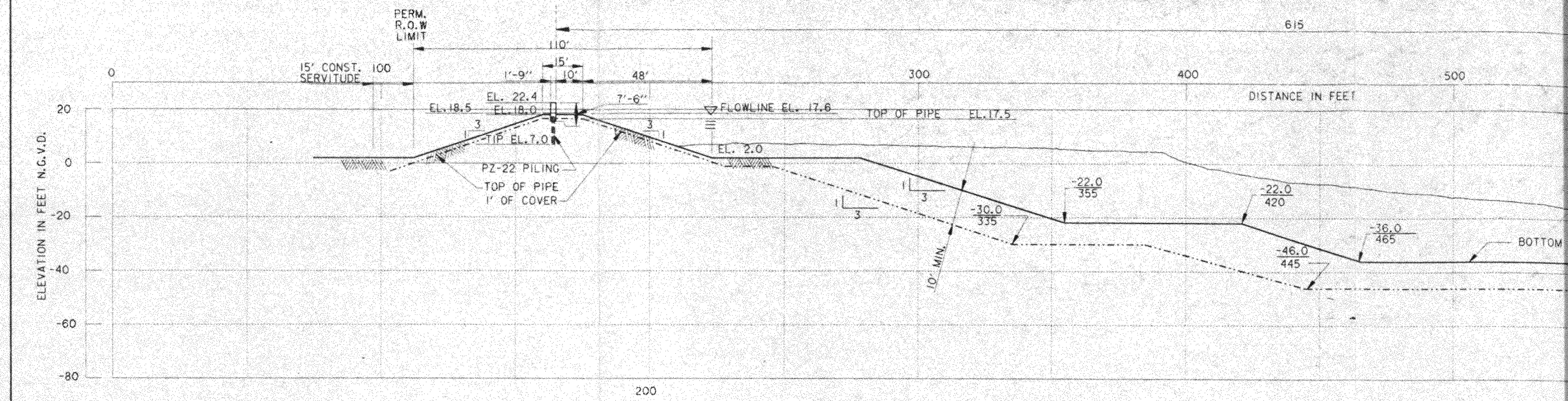

SECTION Ⓒ SHIP LOCK

NOTE: GROUND LINE SHOWN IS STA. 29+00 (RANGE 9)

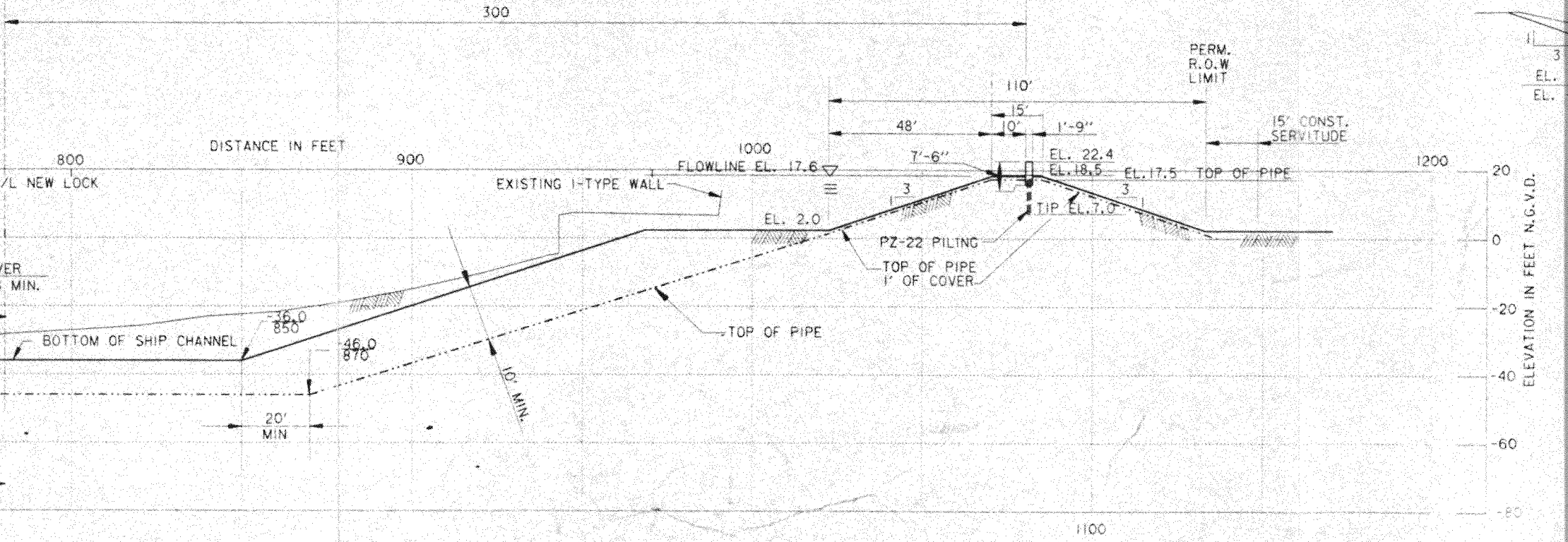

SECTION Ⓒ SHIP LOCK

NOTE: GROUND LINE SHOWN IS STA. 29+00 (RANGE 9)

SCALE: 1" = 20'

SIDE OF PROTECTION, EAST SIDE

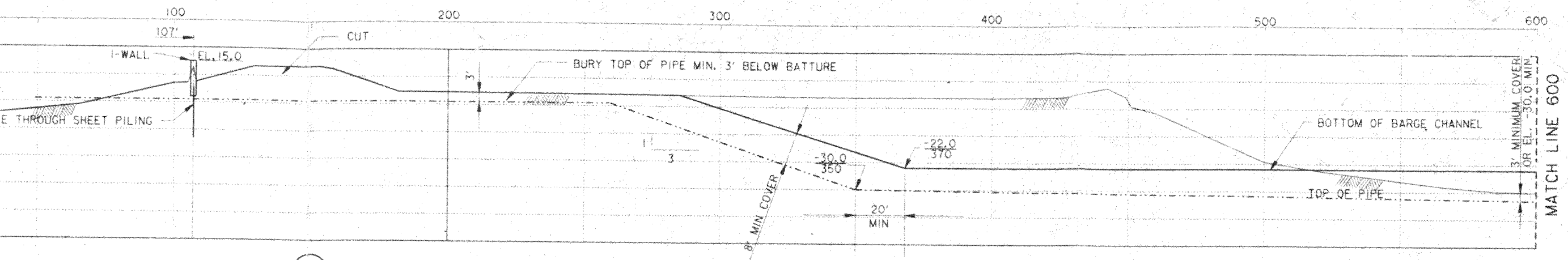

UND LINE SHOWN IS
A.67+35.00 (RANGE 10)

SECTION (E) BARGE LOCK

NOTE: HURRICANE SIDE OF PROTECTION, WEST SIDE

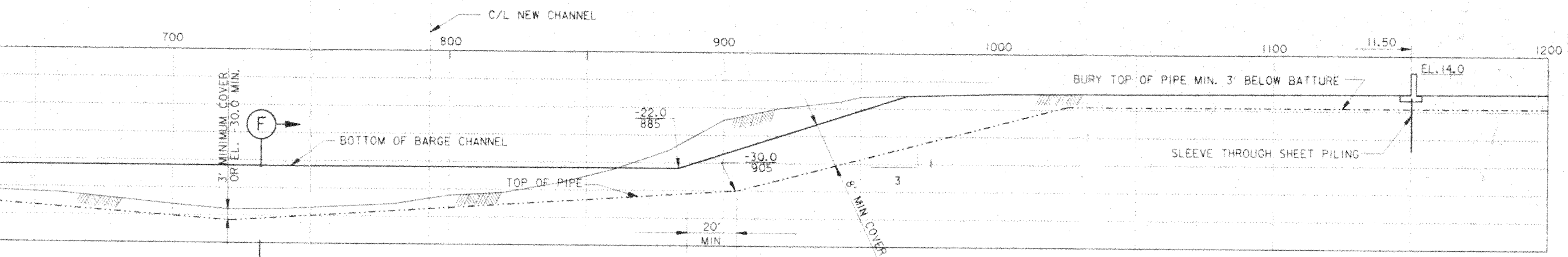

NOTE: GROUND LINE SHOWN IS
STA.67+35.00 (RANGE 10)

SECTION (E) BARGE LOCK

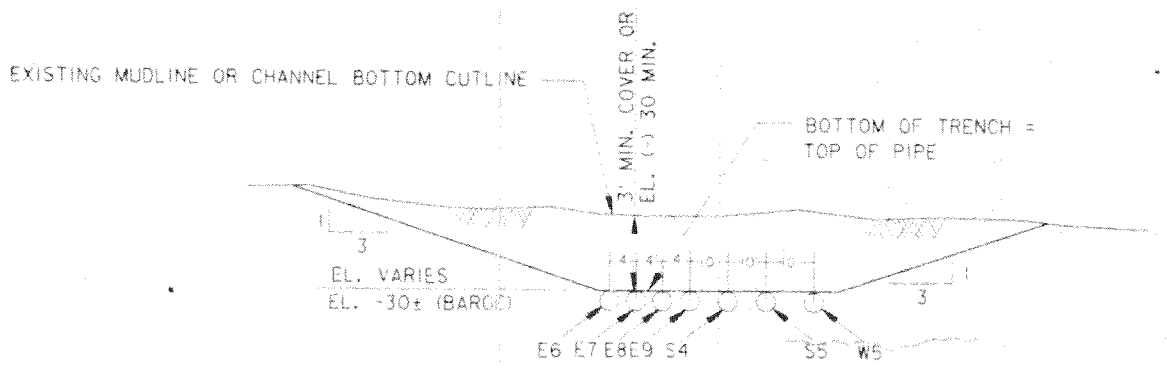

SECTION (F) BARGE LOCK

N.T.S.

SCALE: 1" = 20'

MISSISSIPPI RIVER - GULF OUTLET
NEW LOCK AND CONNECTING CHANNELS
(INDUSTRIAL CANAL LOCK REPLACEMENT)
FEASIBILITY STUDY
BARGE CHANNEL

UTILITY RELOCATION CORRIDORS

U.S. ARMY ENGINEER DISTRICT, NEW ORLEANS
CORPS OF ENGINEERS
NEW ORLEANS, LOUISIANA

DESIGNED BY:	T.F.P.	PLOT SCALE: 240	PLOT DATE: X	CADD/GIS DESIGNATION:
DRAWN BY:	J.B.B.			FILE NO.: H-2-40392
CHECKED BY:	A.D.S.A.	DATE: MAY 5, 93		

NOTE: HURRICANE SIDE OF PROTECTION, EAST SIDE

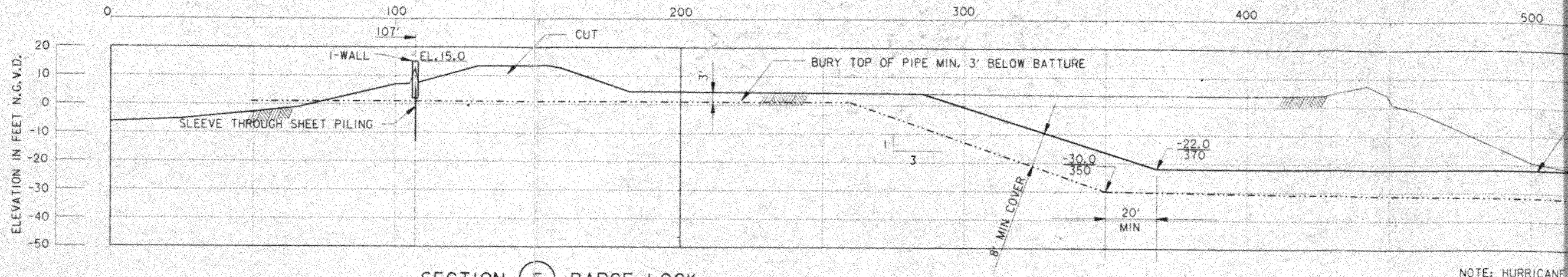

NOTE: GROUND LINE SHOWN IS STA. 67+35.00 (RANGE 10)

SECTION (E) BARGE LOCK

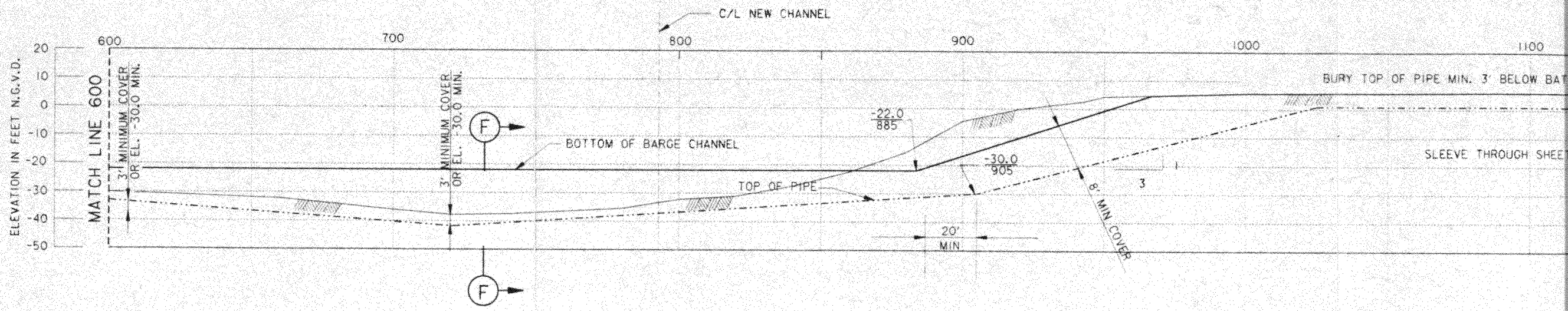

NOTE: GROUND LINE SHOWN IS STA. 67+35.00 (RANGE 10)

SECTION (E) BARGE LOCK

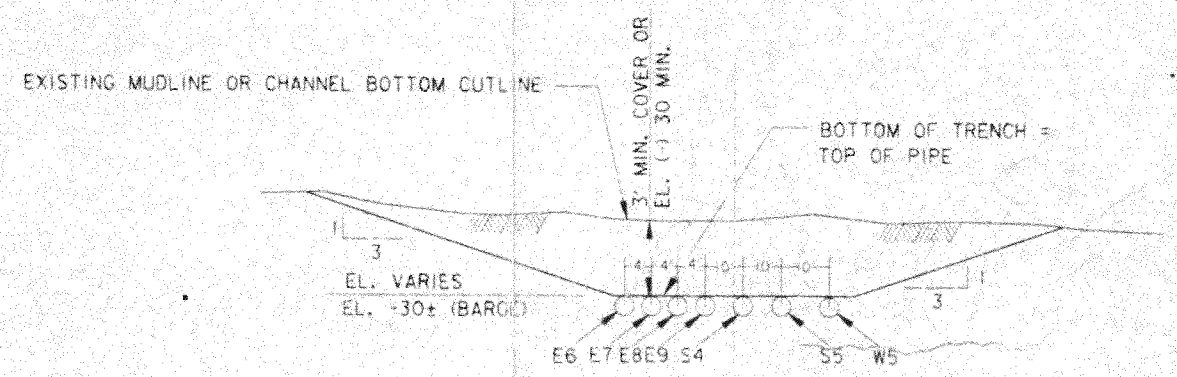

SECTION (F) BARGE LOCK

N.T.S.

SCALE: 1" = 20'

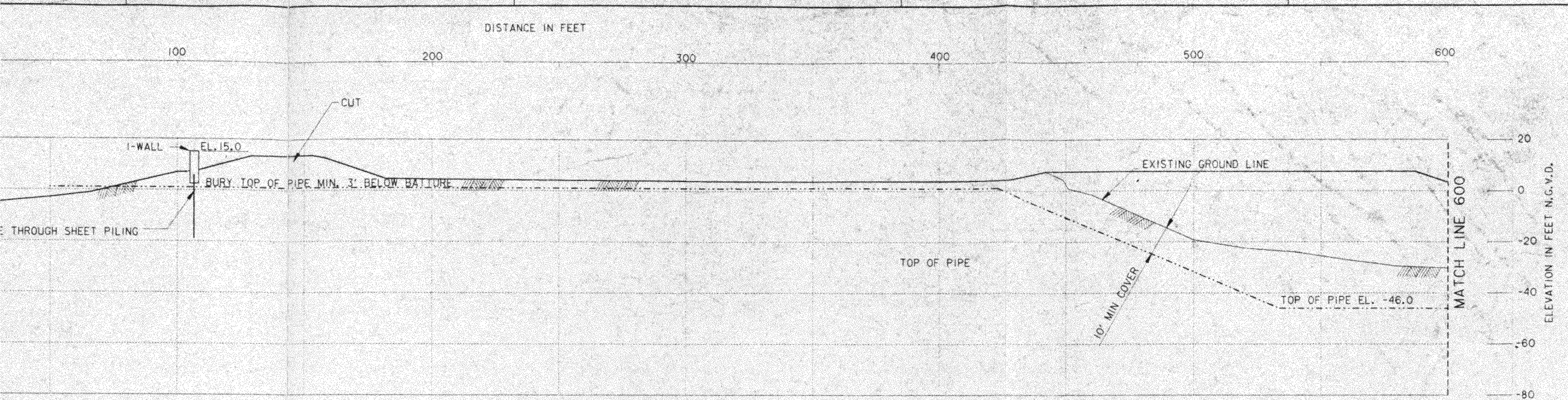

SECTION (E) SHIP LOCK

NOTE: GROUND LINE SHOWN IS STA.67+35 (RANGE 19)

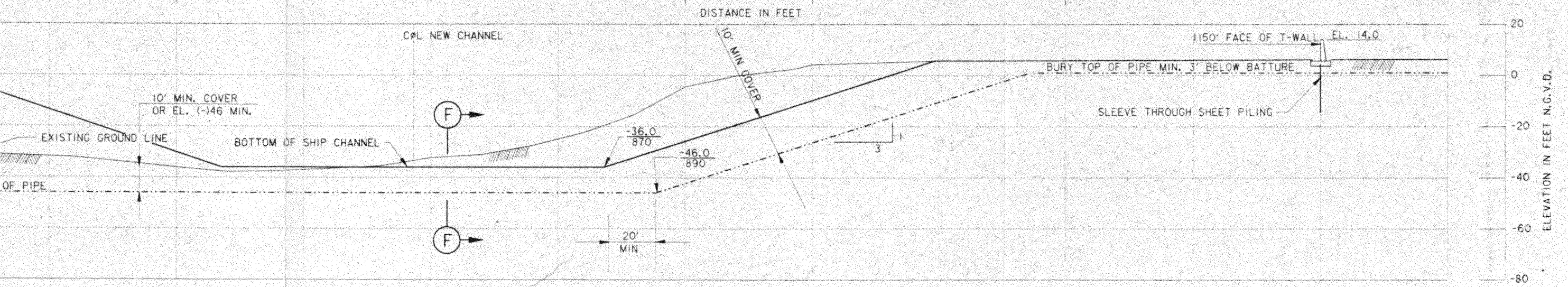

SECTION (E) SHIP LOCK

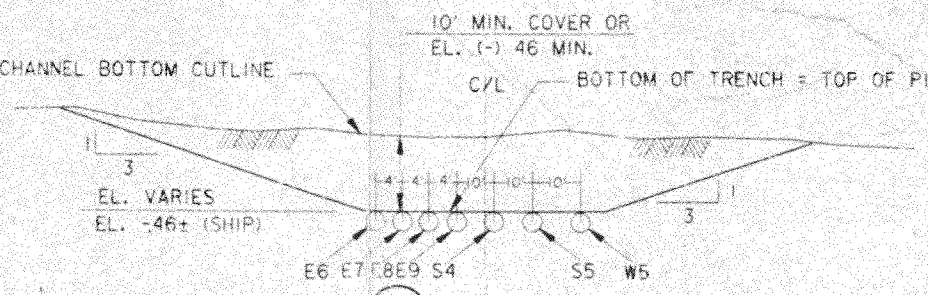

SECTION (F) SHIP LOCK

N.T.S.

SCALE: 1" = 20'

MISSISSIPPI RIVER - GULF OUTLET
NEW LOCK AND CONNECTION CHANNELS
(INDUSTRIAL CANAL LOCK REPLACEMENT)
FEASIBILITY STUDY
SHIP CHANNEL

UTILITY RELOCATION CORRIDORS

U.S. ARMY ENGINEER DISTRICT, NEW ORLEANS
CORPS OF ENGINEERS
NEW ORLEANS, LOUISIANA

		PLOT SCALE	PLOT DATE	CADD FILE/GENPLOT ICON
DESIGNED BY:	T.F.P.			
DRAWN BY:	J.E.B.	240	X	FILE NO.
CHECKED BY:	A.D.J.	DATE: JAN. 5, 1993		H-2-40392

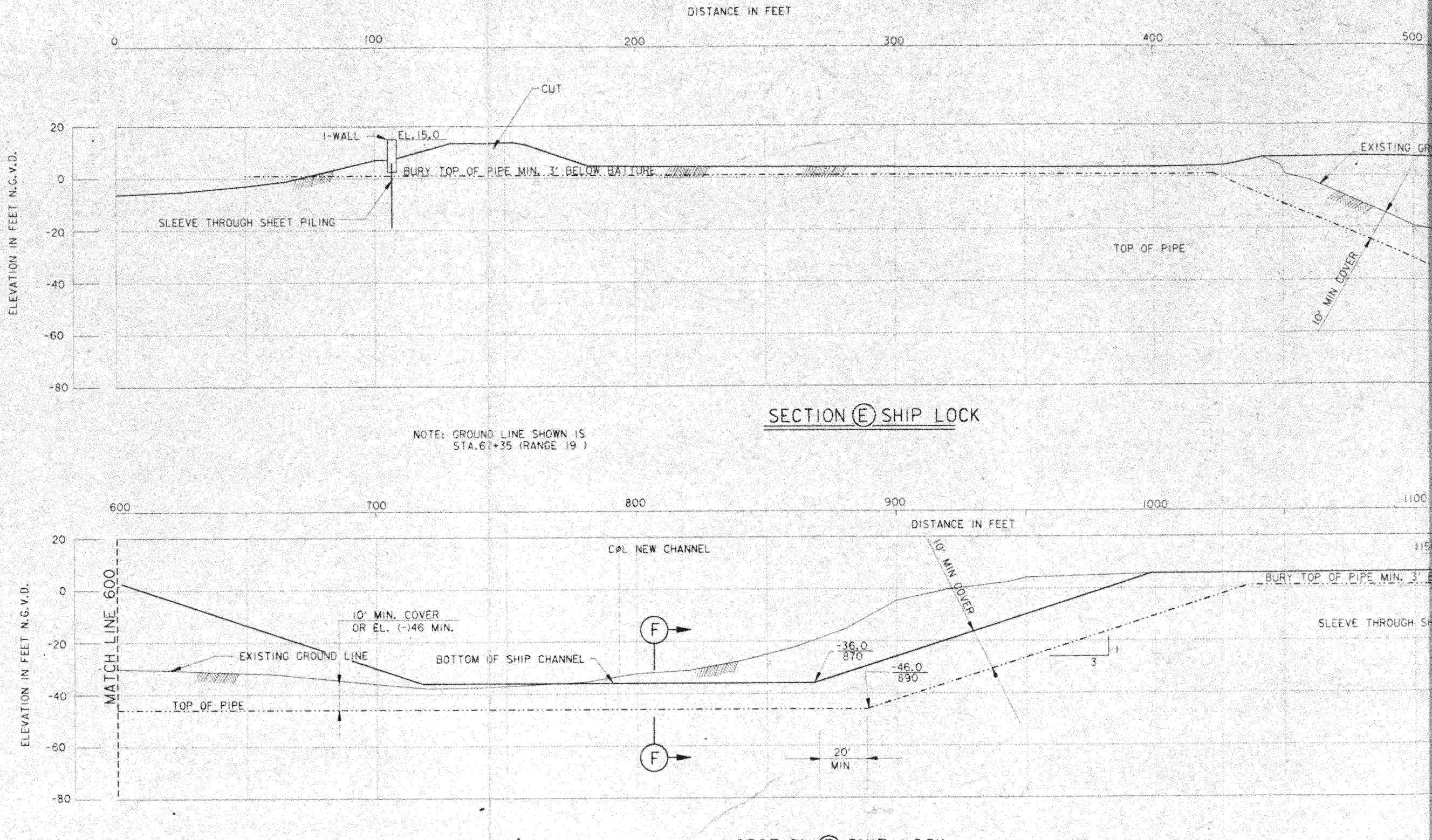

SECTION (E) SHIP LOCK

NOTE: GROUND LINE SHOWN IS STA.67+35 (RANGE 19)

SECTION (E) SHIP LOCK

NOTE: GROUND LINE SHOWN IS STA.67+35 (RANGE 19)

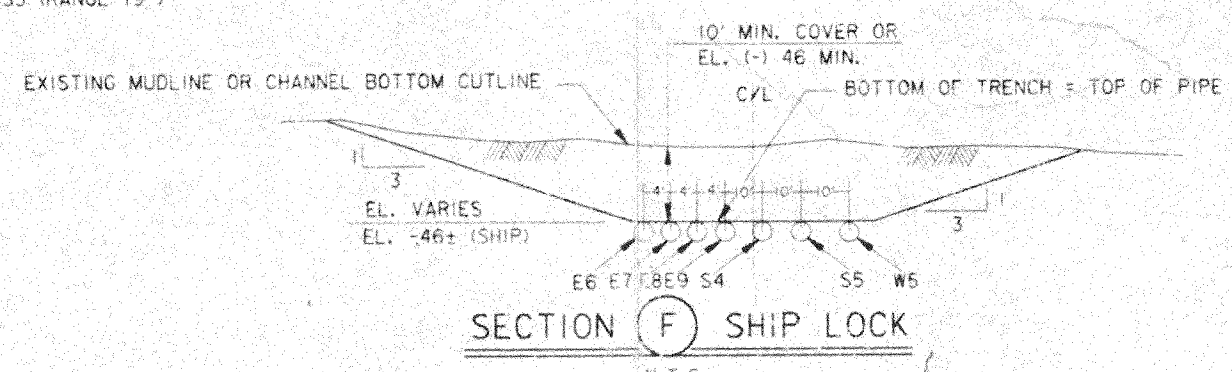

SECTION (F) SHIP LOCK

N.T.S.

SCALE: 1" = 20'

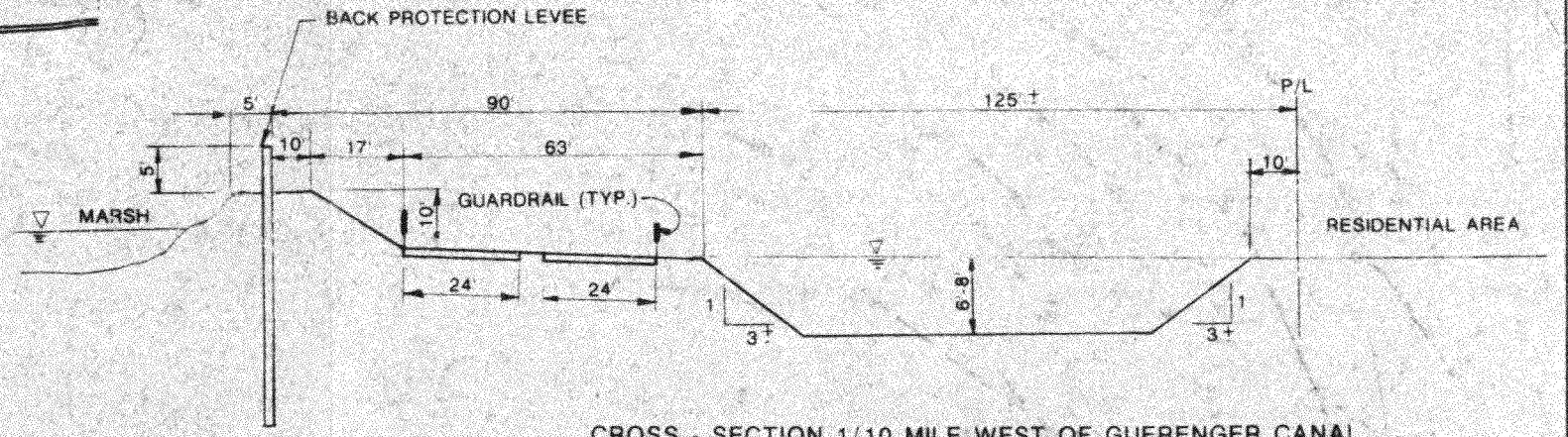

CROSS - SECTION 1/10 MILE WEST OF GUERENGER CANAL
(LOOKING EAST)
SCALE: 1"=20'-0"

LEGEND

- □□□□□□ NEW CONSTRUCTION MERAUX TRACT
- ★★★★★★ NEW FLA. AVE. HIGH RISE (LADOTD PROJECT)
- □★□★□★ RESURFACE EXISTING ASPHALT ROADWAY & MAINTAIN
- ★●★●★● REPAIR & MAINTAIN EXISTING ROADWAY
- ●●●●●●● DETOUR ROUTING TO THOROUGHFARES, NO WORK REQUIRED
- ★●●●★ INCIDENT MANAGEMENT PLAN ONLY

MISSISSIPPI RIVER - GULF OUTLET
NEW LOCK AND CONNECTING CHANNELS
(INDUSTRIAL CANAL LOCK REPLACEMENT)
FEASIBILITY STUDY
NORTH OF CLAIBORNE AVE. SITE

DETOUR ROUTING PLAN
X

U.S. ARMY ENGINEER DISTRICT, NEW ORLEANS
CORPS OF ENGINEERS
NEW ORLEANS, LOUISIANA

DESIGNED BY: X	PROJECT SCALE:	PLOT DATE:	CADD FILE/ASSIGN:
DRAWN BY: X	200	X	FILE NO.
CHECKED BY: X	DATE:	X	H-2-40392

PLATE B-116

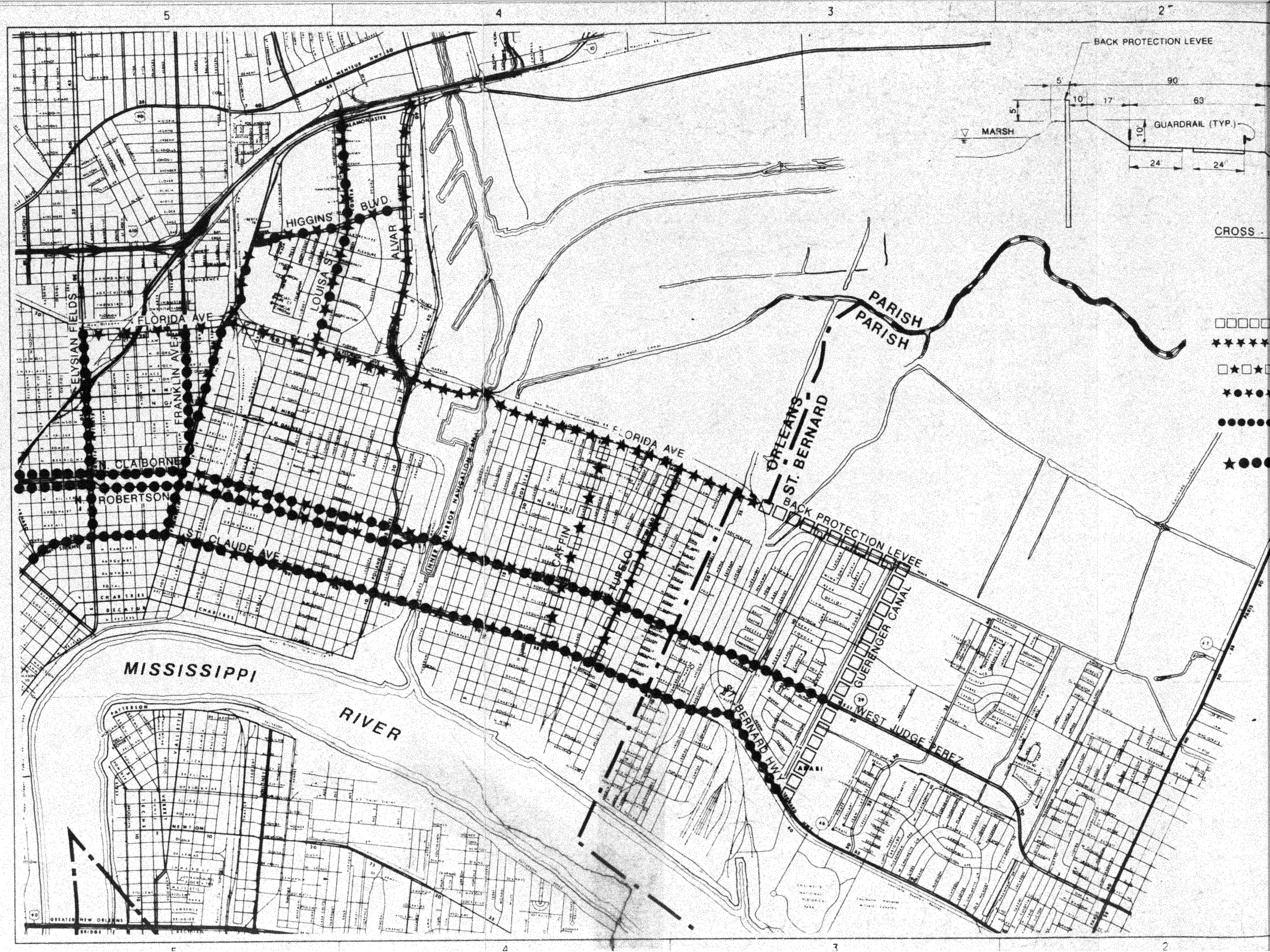

BACK PROTECTION LEVEE
5'
90'
10'
17'
63'
5'
MARSH
GUARDRAIL (TYP.)
10'
24'
24'
CROSS -
HIGGINS BLVD
LOUISA ST
ALVAR
FLORIDA AVE
ELYSIAN FIELDS
FRANKLIN AVE
N. CLAIBORNE
N. ROBERTSON
ST. CLAUDE AVE
CAFFIN
TUPELO
FLORIDA AVE
PARISH
PARISH
ORLEANS
ST. BERNARD
BACK PROTECTION LEVEE
GUERENGER CANAL
WEST JUDGE PEREZ
ST. BERNARD HWY
MISSISSIPPI
RIVER

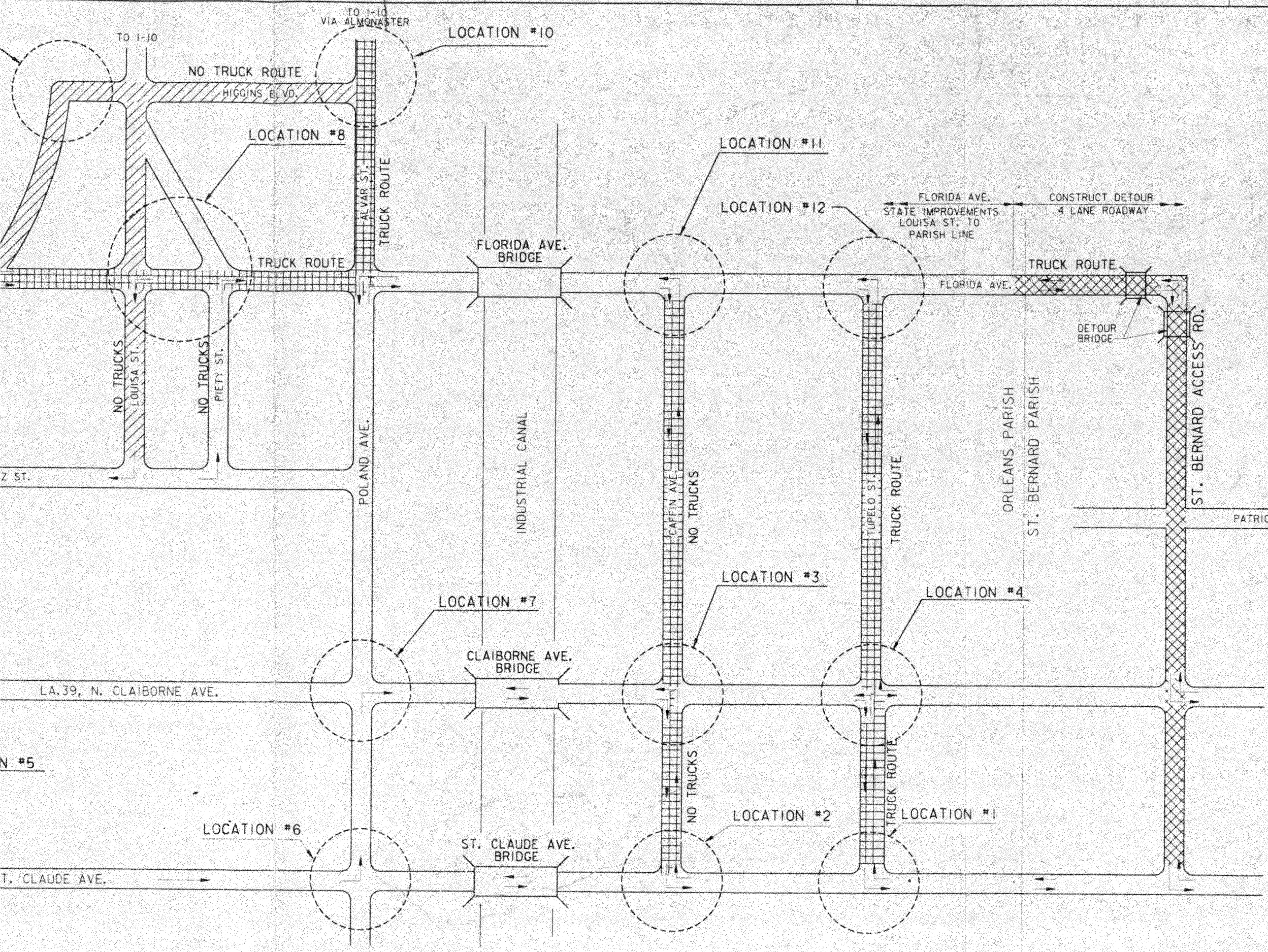

LA. 46 DETOUR ROUTING & ALTERNATE ROUTES

N.T.S.

NOTES:

1. "LOCATION" DETAILS ARE SHOWN ON PLATES B THRU B .
2. THE DETOUR ROUTES SHOWN SHALL BE USED FOR BOTH BRIDGE CLOSINGS, ONLY THE SIGNAGE SHALL BE CHANGED.

LEGEND

- RESURFACE EXISTING ASPHALT ROADWAY & PROVIDE MAINTENANCE.
- MAKE MINOR REPAIRS TO EXISTING ROADWAY & PROVIDE MAINTENANCE
- CONSTRUCT NEW 4 LANE ASPHALT ROADWAY

MISSISSIPPI RIVER - GULF OUTLET
NEW LOCK AND CONNECTING CHANNELS
(INDUSTRIAL CANAL LOCK REPLACEMENT)
FEASIBILITY STUDY
NORTH OF CLAIBORNE AVE. SITE

DETOUR ROUTING ALTERNATE ROUTES

U.S. ARMY ENGINEER DISTRICT, NEW ORLEANS
CORPS OF ENGINEERS
NEW ORLEANS, LOUISIANA

DESIGNED BY: X	PLOT SCALE: X	PLOT DATE: X	CADD FILE: DETOUR49.DGN	
DRAWN BY: X			FILE NO.	H-2-40392
CHECKED BY: X	DATE: X			

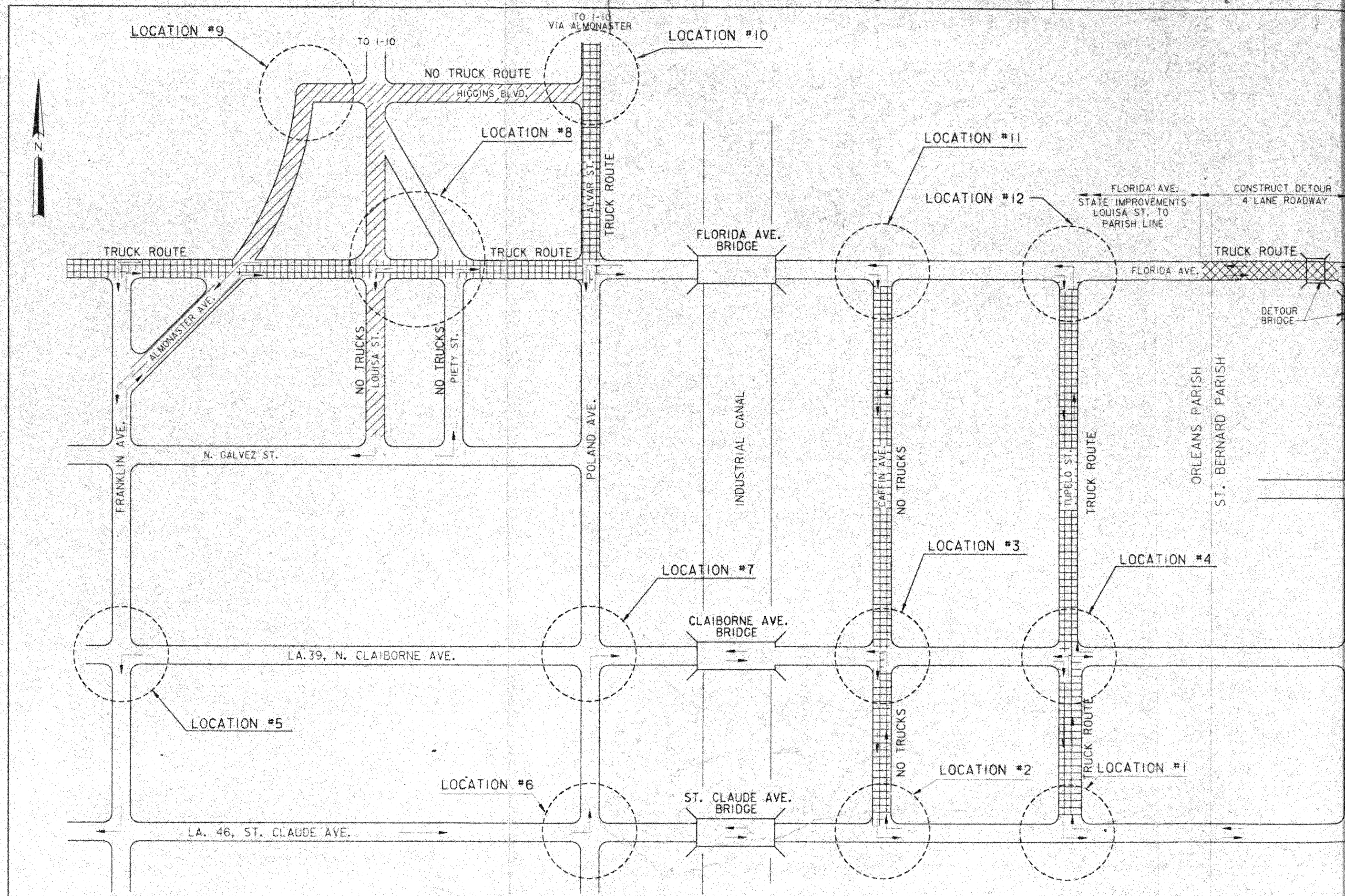

LA. 46 DETOUR ROUTING & ALTERNATE ROUTES

N.T.S.

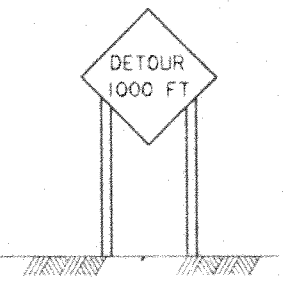

(2) 1,000'

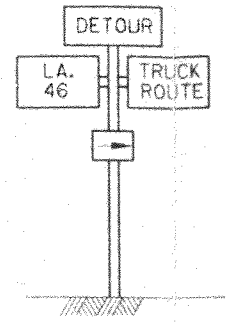

(2) AT INTERSECTION

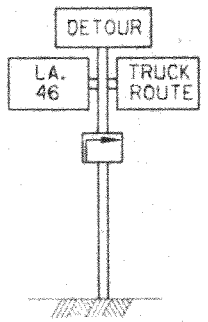

(2) PREVIOUS BLOCK

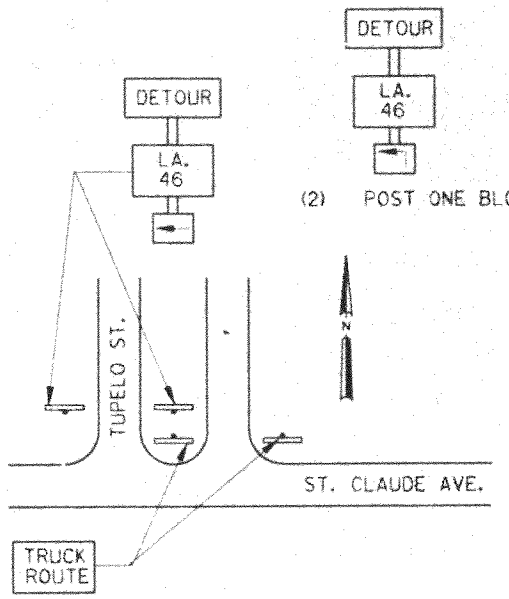

(2) POST ONE BLOCK AHEAD

D.1
T APPROACH TO TUPELO ST.

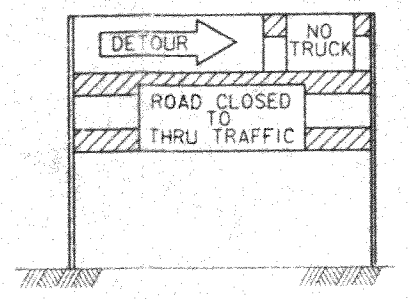

(2) POST ON FAR SIDE

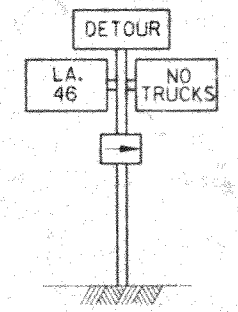

(2) AT INTERSECTION

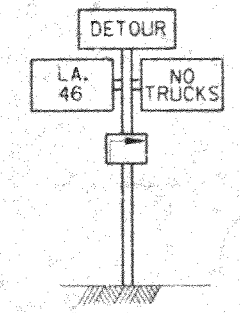

(2) PREVIOUS BLOCK

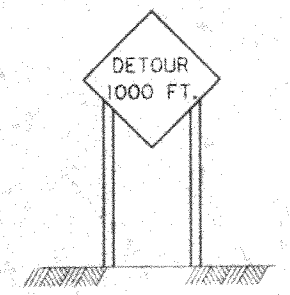

(2) 1,000'

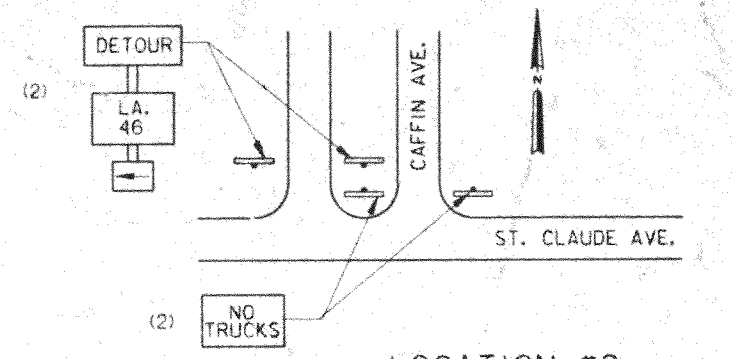

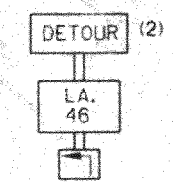

POST ONE BLOCK AHEAD

LOCATION #2

LA. 46, ST CLAUDE AVE, EAST APPROACH TO CAFFIN AVE.

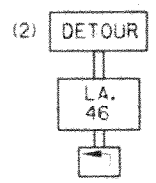

POST ONE BLOCK AHEAD

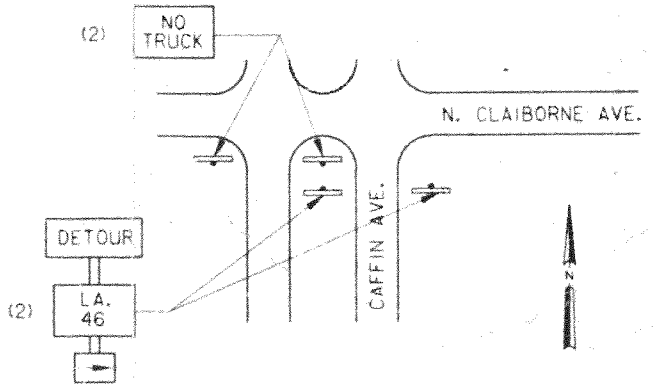

WEST APPROACH TO CAFFIN AVE. , LOCATION #3

N. CLAIBORNE AVE., EASTBOUND, ON THE EAST SIDE OF THE CANAL

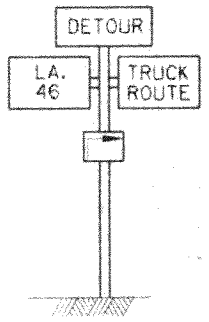

(1) POST ONE BLOCK AHEAD

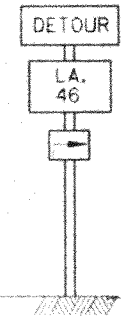

(2) POST ONE BLOCK AHEAD

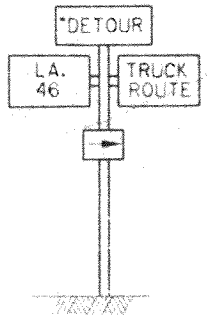

(1) POST AT INTERSECTION

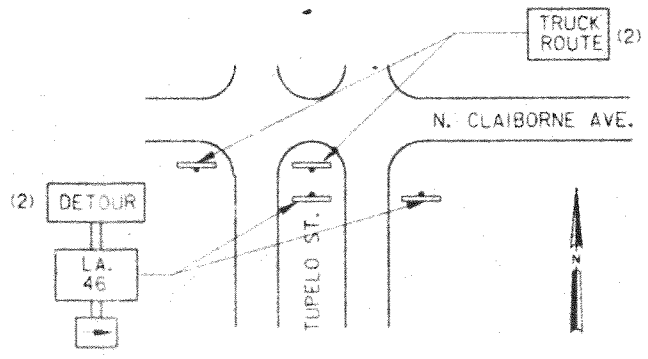

WEST APPROACH TO TUPELO ST., LOCATION #4

MISSISSIPPI RIVER - GULF OUTLET
NEW LOCK AND CONNECTING CHANNELS
(INDUSTRIAL CANAL LOCK REPLACEMENT)
FEASIBILITY STUDY
NORTH OF CLAIBORNE AVE. SITE

LA 46 DETOUR ROUTING
LOCATIONS 1,2,3, &4

U.S. ARMY ENGINEER DISTRICT, NEW ORLEANS
CORPS OF ENGINEERS
NEW ORLEANS, LOUISIANA

DESIGNED BY: X		PLOT SCALE: 1200	PLOT DATE: X	CADD FILE: DETOUR46.DGN
DRAWN BY: X				FILE NO. H-2-40392
CHECKED BY: X		DATE: X		

PLATE B-118



(2) 2,000'

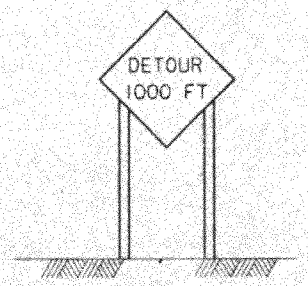

(2) 1,000'

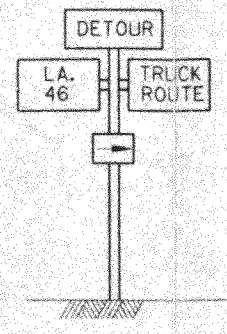

(2) AT INTERSECTION

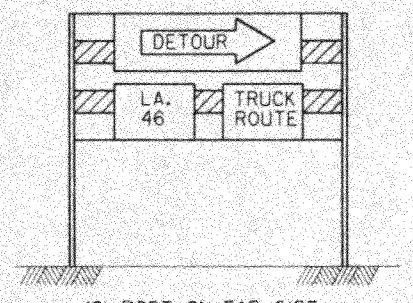

(2) POST ON FAR SIDE

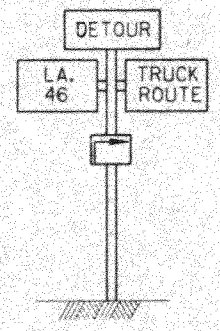

(2) PREVIOUS BLOCK

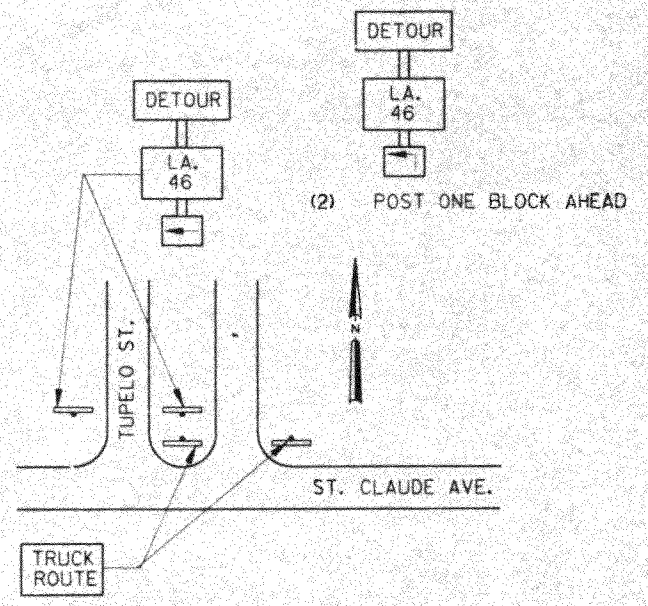

(2) POST ONE BLOCK AHEAD

LOCATION NO. 1

LA. 46, ST. CLAUDE AVE. EAST APPROACH TO TUPELO ST.

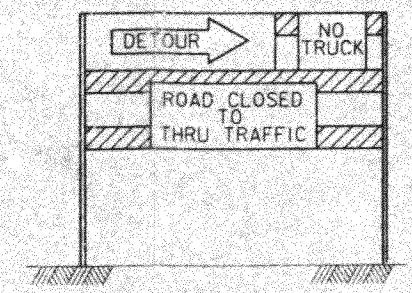

(2) POST ON FAR SIDE

(2)

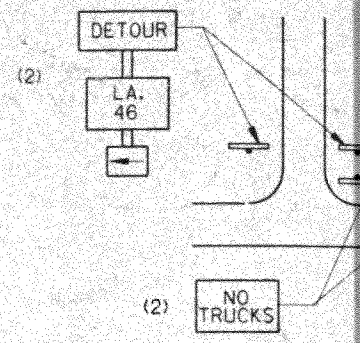

LA. 46, ST CLAU

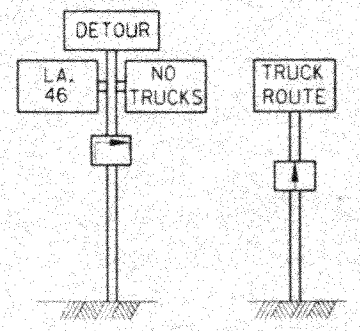

(1) POST ONE BLOCK AHEAD

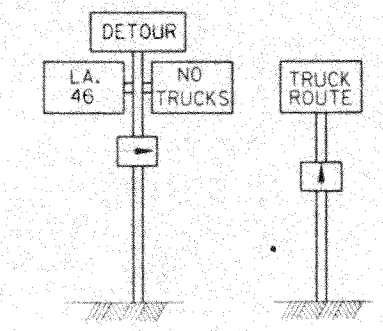

(1) POST AT INTERSECTION

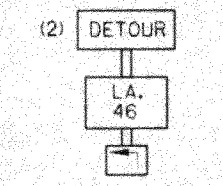

POST ONE BLOCK AHEAD

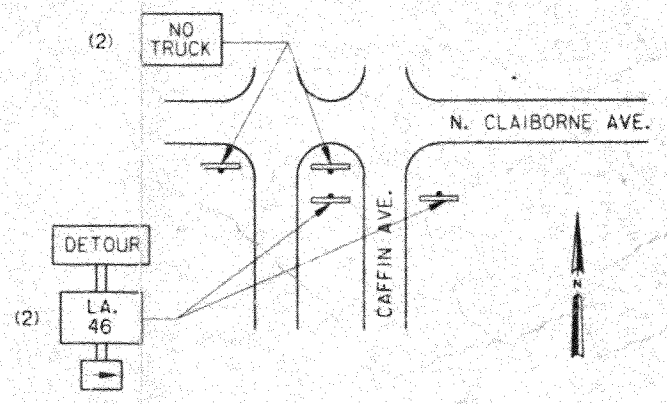

WEST APPROACH TO CAFFIN AVE. , LOCATION #3

N. CLAIBORNE AVE., EASTBOUND, ON THE EAST SIDE OF THE CANAL

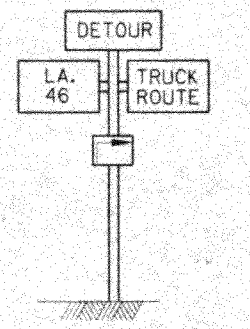

(1) POST ONE BLOCK AHEAD

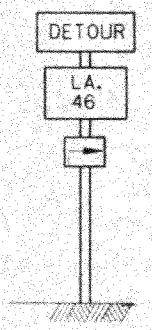

(2) POST ONE BLOCK AHEA

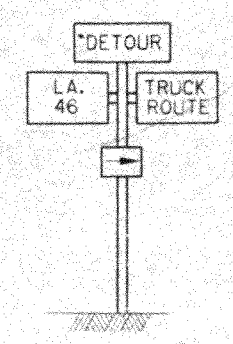

(1) POST AT INTERSECTION

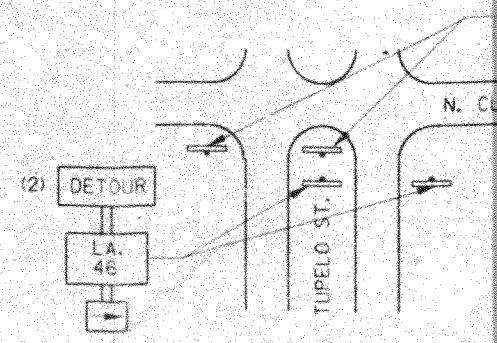

WEST APPROACH TO TUPELO ST., LOCAT

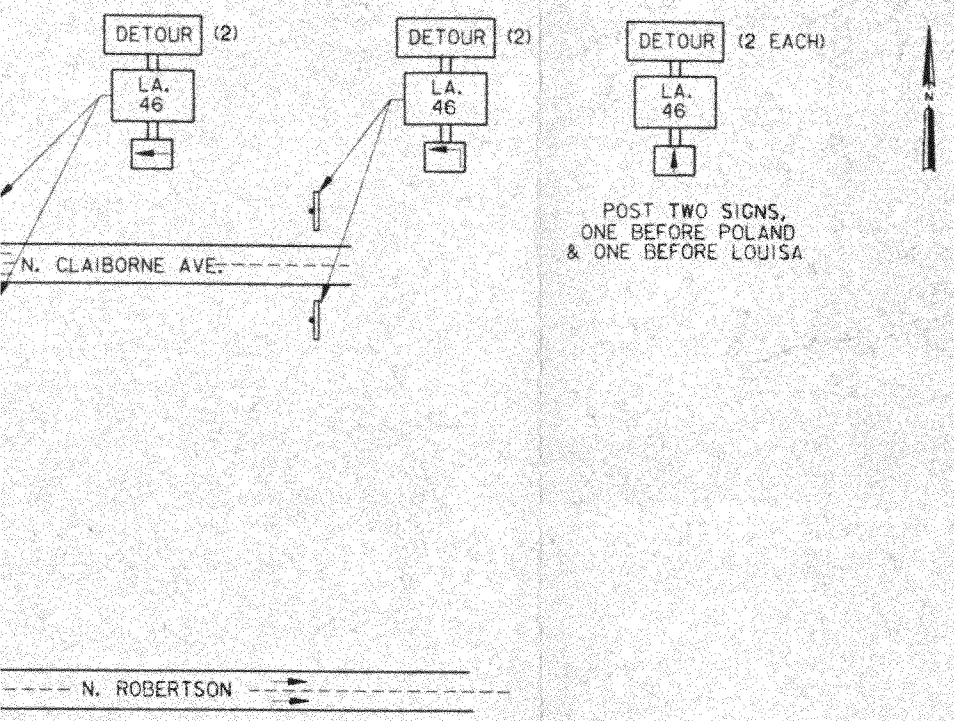

LOCATION #5

N. CLAIBORNE AVE., WESTBOUND, ON THE EAST SIDE OF THE CANAL APPROACHING FRANKLIN AVE.

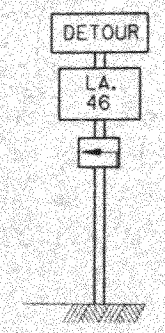

(2) POST ONE BLOCK AHEAD OF POLAND AVE.

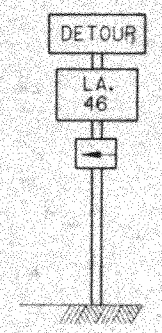

(2) AT POLAND AVE.

NOTES:

1. ROAD CLOSURE SIGNING WILL BE SUPPLIED BY THE PROJECT CONNTRACTOR.
2. SINCE THERE WILL BE NO THROUGH TRAFFIC WHILE THE BRIDGE IS CLOSED, DIRECT LEFT TURNS CAN BE PERMITTED. PRESENTLY, MOTORISTS HAVE TO TURN RIGHT AND MAKE A U-TURN.

LOCATION #6

LA. 46, ST. CLAUDE AVE., WEST APPROACH TO BRIDGE

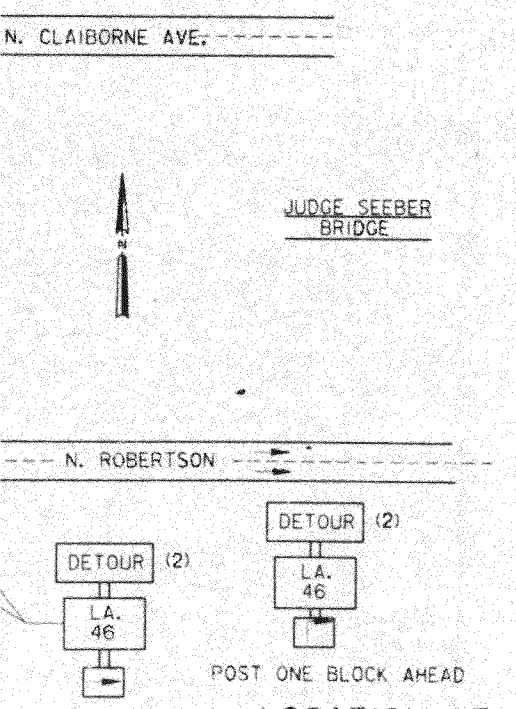

LOCATION #7

AIBORNE AVE., EAST BOUND, ON THE EAST SIDE OF THE CANAL AT POLAND AVE.

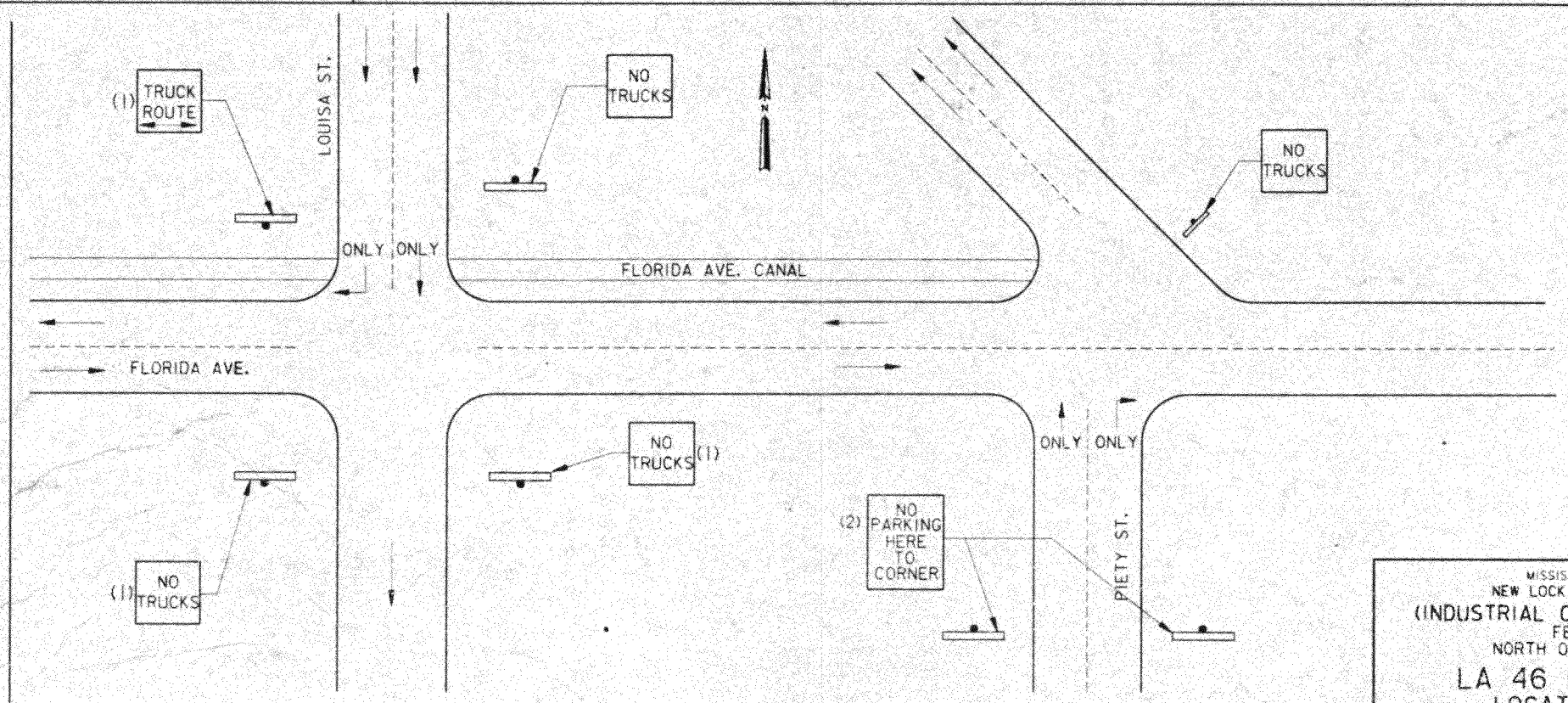

LOCATION #8

FLORIDA AVE. AT LOUISA ST. / PIETY ST.

MISSISSIPPI RIVER - GULF OUTLET
NEW LOCK AND CONNECTING CHANNELS
(INDUSTRIAL CANAL LOCK REPLACEMENT)
FEASIBILITY STUDY
NORTH OF CLAIBORNE AVE. SITE

LA 46 DETOUR ROUTING
LOCATIONS 5,6,7, & 8

U.S. ARMY ENGINEER DISTRICT, NEW ORLEANS
CORPS OF ENGINEERS
NEW ORLEANS, LOUISIANA

DESIGNED BY: X	PLOT SCALE: 1200	PLOT DATE: X	CADD FILE: DETOUR47.DGN
DRAWN BY: X			FILE NO.
CHECKED BY: X	DATE: X		H-2-40392

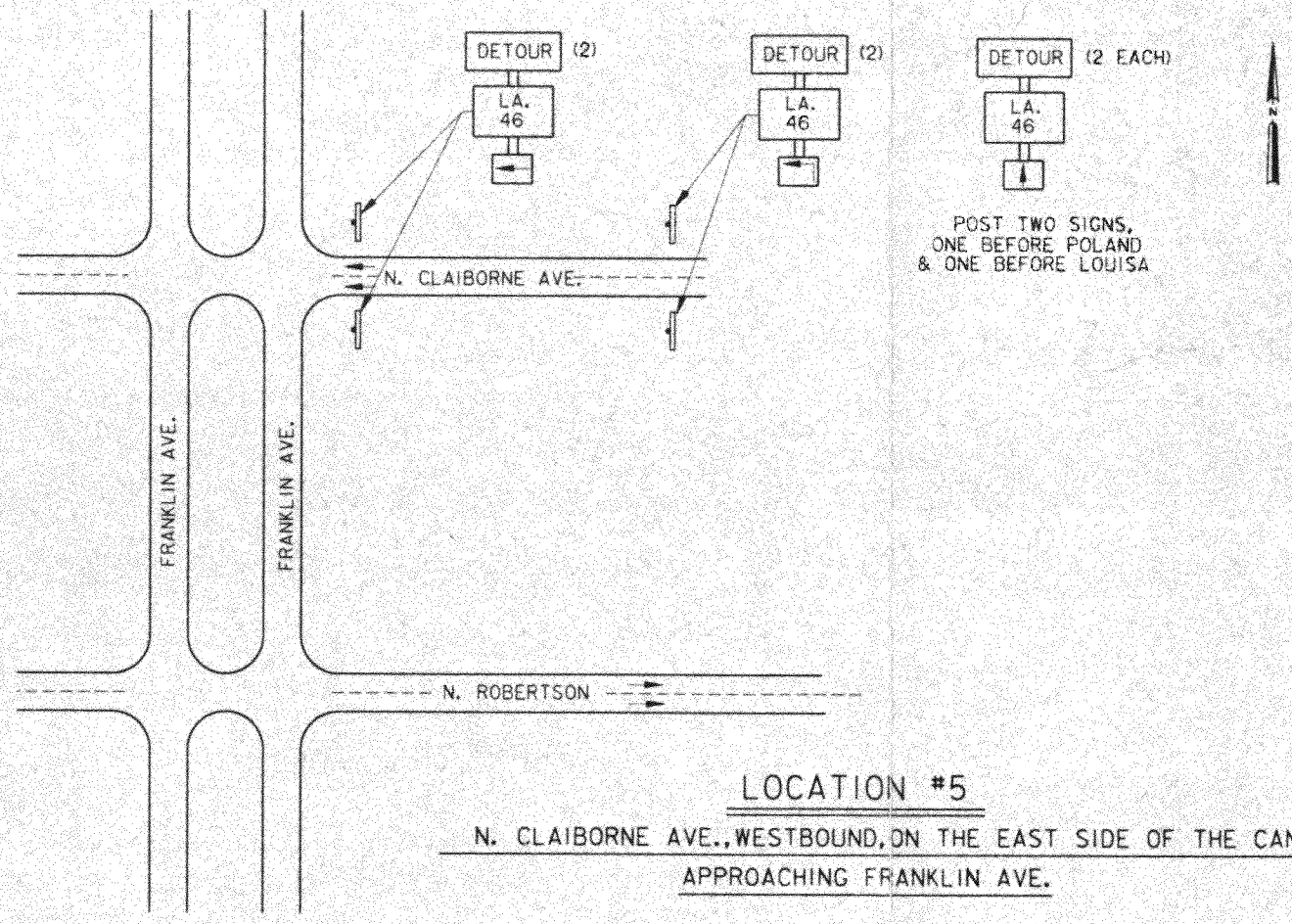

LOCATION #5

N. CLAIBORNE AVE., WESTBOUND, ON THE EAST SIDE OF THE CANAL APPROACHING FRANKLIN AVE.

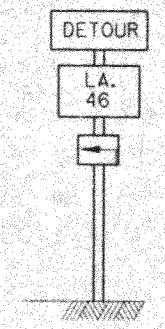

(2) POST ONE BLOCK AHEAD OF POLAND AVE.

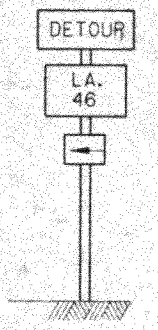

(2) AT POLAND AVE.

NOTES:

1. ROAD CLOSURE SIGNIN THE PROJECT CONNTRA
2. SINCE THERE WILL BE THE BRIDGE IS CLOSE BE PERMITTED. PRESE TO TURN RIGHT AND

LOCA

LA. 46, ST. CLAUDE

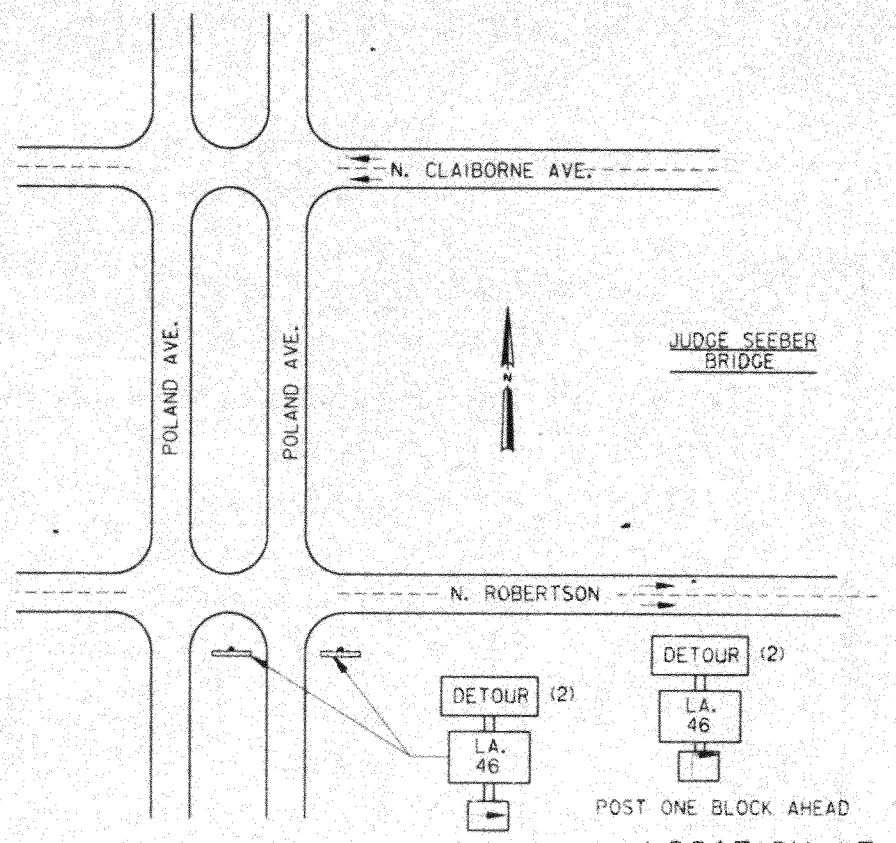

LOCATION #7

N. CLAIBORNE AVE., EAST BOUND, ON THE EAST SIDE OF THE CANAL AT POLAND AVE.

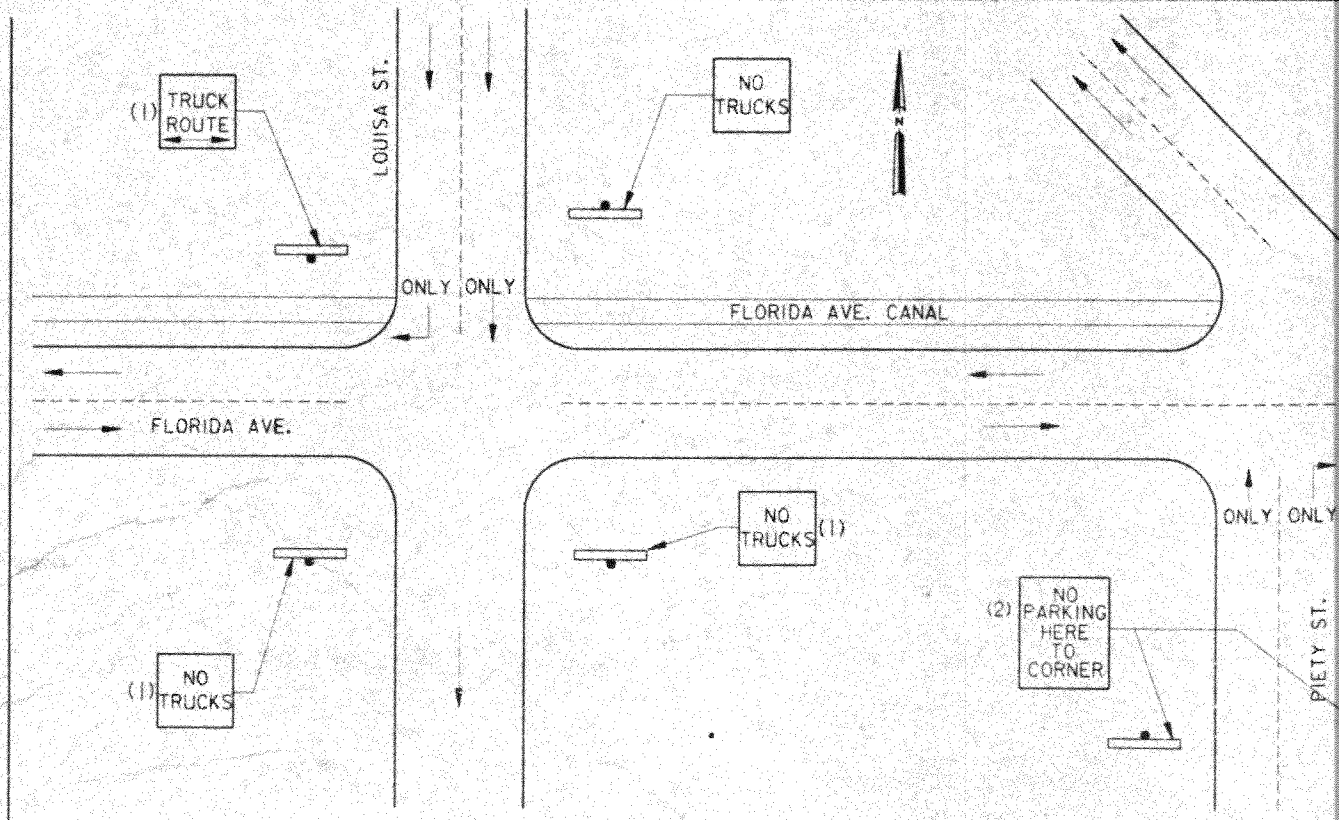

LOCATION #8

FLORIDA AVE. AT LOUISA ST. / PIETY ST.

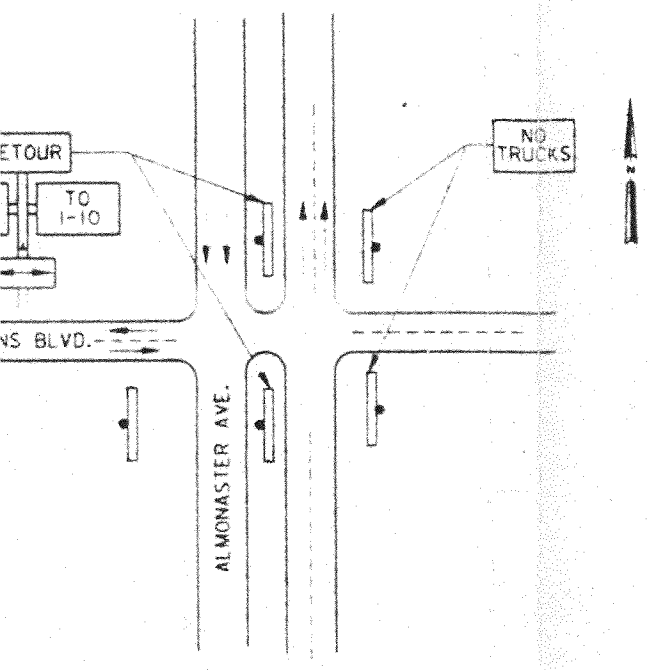

LOCATION #9
HIGGINS AT ALMONASTER

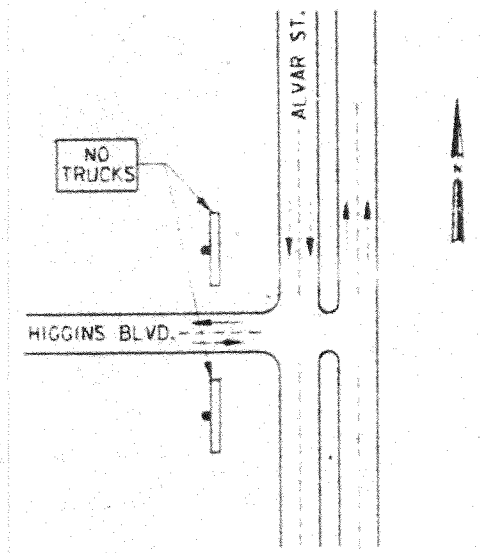

LOCATION #10
ALVAR AT HIGGINS BLVD.

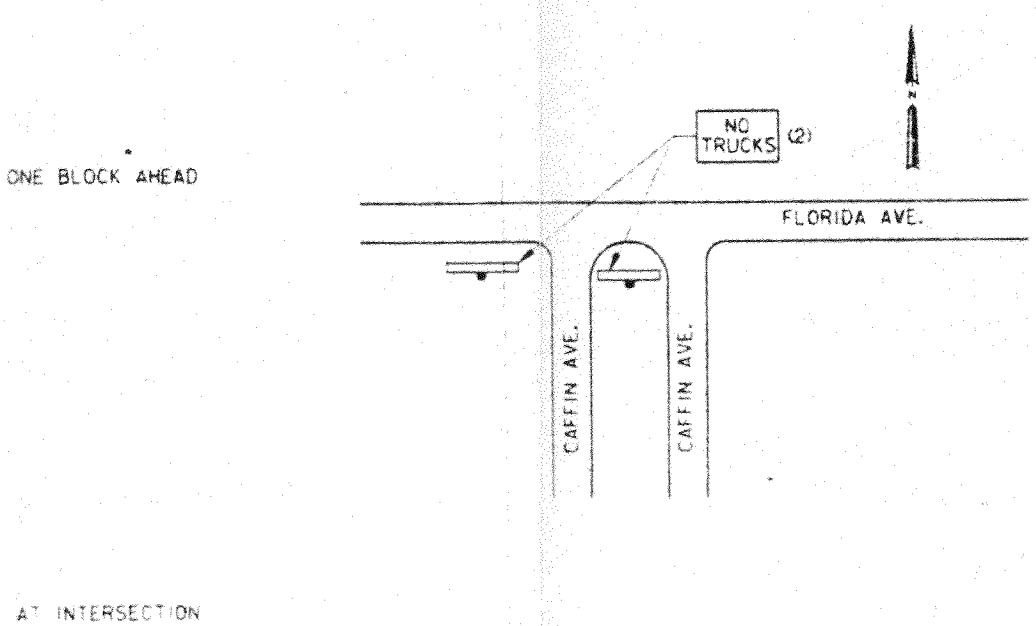

LOCATION #11
APPROACH TO CAFFIN AVE.

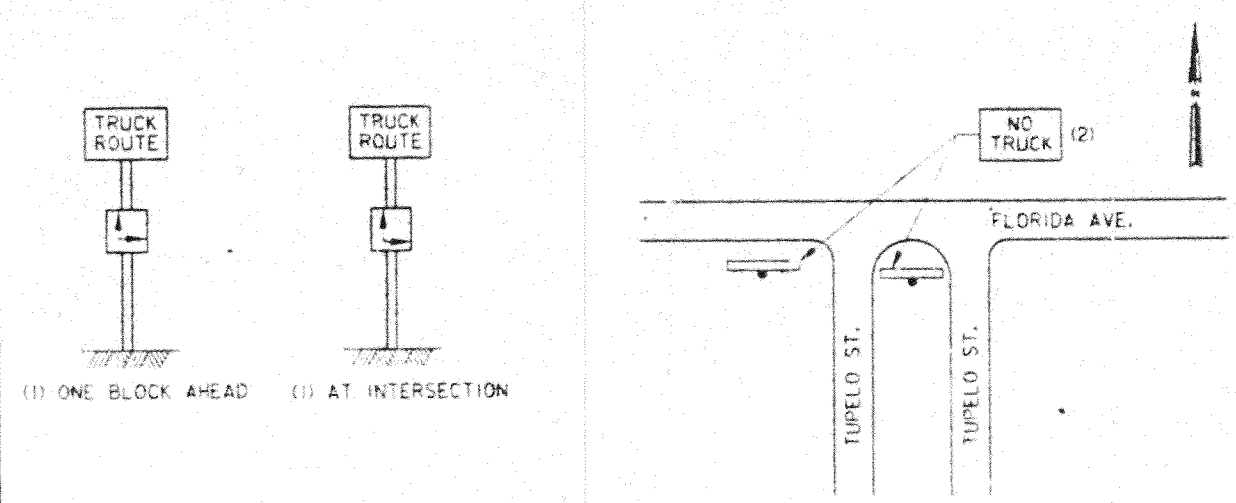

LOCATION #12
APPROACH TO TUPELO ST., LOCATION NO. 11

MISSISSIPPI RIVER - GULF OUTLET
NEW LOCK AND CONNECTING CHANNELS
(INDUSTRIAL CANAL LOCK REPLACEMENT)
FEASIBILITY STUDY
NORTH OF CLAIBORNE AVE. SITE

LA. 46 DETOUR ROUTING
LOCATIONS 9, 10, 11, & 12

U.S. ARMY ENGINEER DISTRICT, NEW ORLEANS
CORPS OF ENGINEERS
NEW ORLEANS, LOUISIANA

DESIGNED BY: X	PLOT SCALE: X	PLOT DATE: X	CADD FILE: DETOUR WELDON
DRAWN BY: X			FILE NO. H-2-40392
CHECKED BY: X	DATE: X		

PLATE B-120

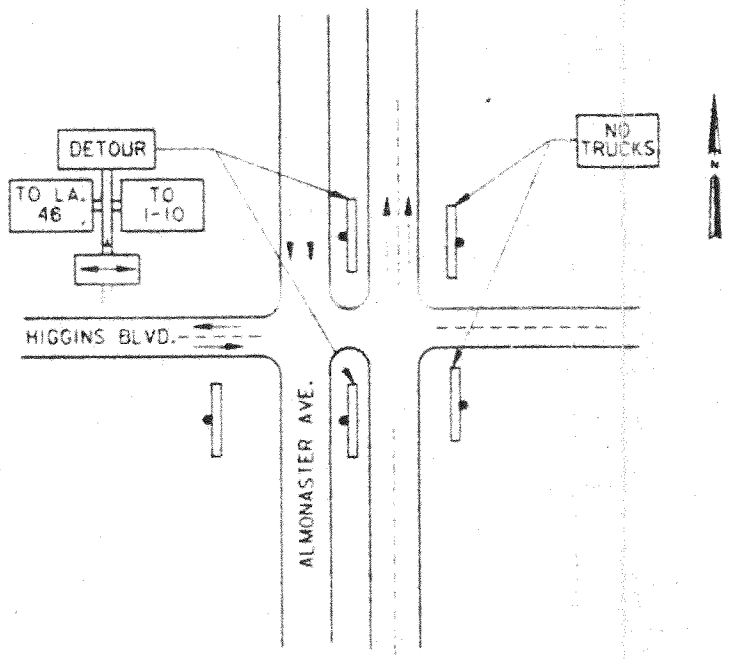

LOCATION #9
HIGGINS AT ALMONASTER

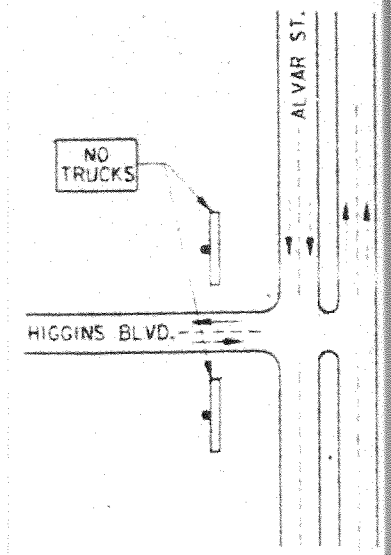

LOCATION
ALVAR AT HIGGIN

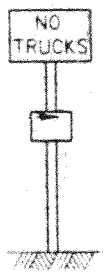

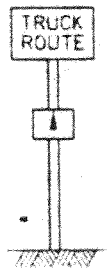

(1) ONE BLOCK AHEAD

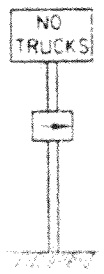

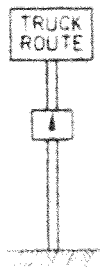

(1) AT INTERSECTION

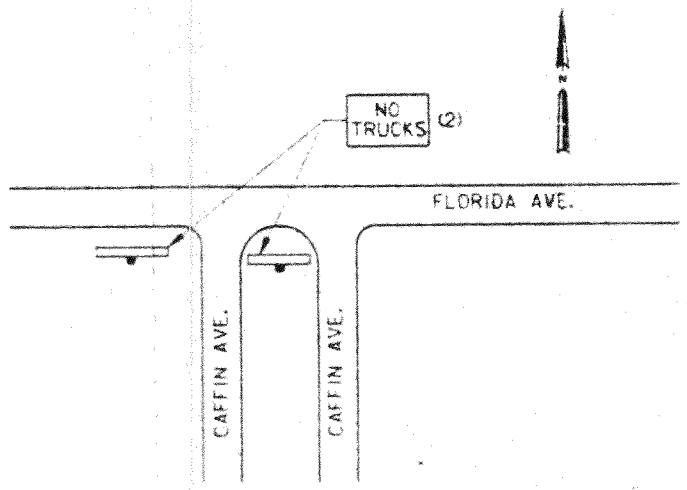

LOCATION #11
APPROACH TO CAFFIN AVE.

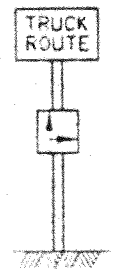

(1) ONE BLOCK AHEAD

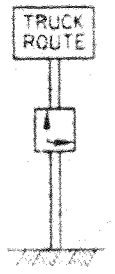

(1) AT INTERSECTION

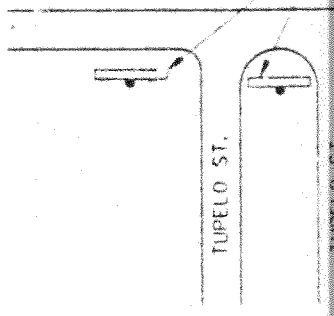

LOCATION #12
APPROACH TO TUPELO ST..LOC

SOIL CLASSIFICATION

TYPICAL NAMES
L, Well Graded, gravel-sand mixtures, little or no fines
L, Poorly Graded, gravel-sand mixtures, little or no fines
GRAVEL, gravel-sand-silt mixtures
Y GRAVEL, gravel-sand-clay mixtures
Well-Graded, gravelly sands
Poorly-Graded, gravelly sands
SAND, sand-silt mixtures
Y SAND, sand-clay mixtures
& very fine sand, silty or clayey fine sand or clayey silt with slight plasticity
CLAY, Sandy Clay, Silty Clay, of low to medium plasticity
IC SILTS, and organic silty clays of low plasticity
fine sandy or silty soil with high plasticity
LAY, inorganic clay of high plasticity
IC CLAYS of medium to high plasticity, organic silts
and other highly organic soil
S
mple Retrieved
of two groups are designated by combinations of group symbols.

ESCRIPTIVE SYMBOLS

CONSISTENCY FOR COHESIVE SOILS		
TENCY	COHESION IN LBS./SQ.FT. FROM UNCONFINED COMPRESSION TEST	SYMBOL
OFT	< 250	vSo
T	250-500	So
UM	500-1000	M
F	1000-2000	St
TIFF	2000-4000	vSt
D	> 4000	H

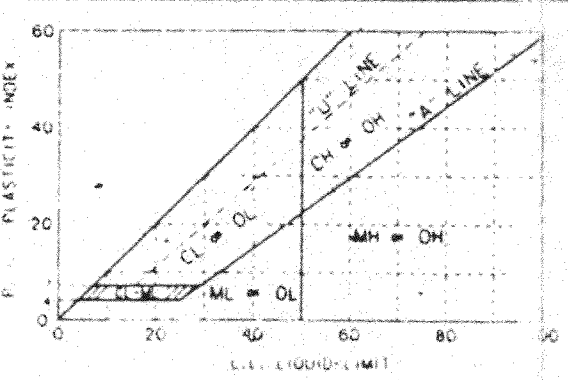

PLASTICITY CHART

ssification of fine-grained soils in accordance with ASTM D 2487

MODIFICATIONS	
MODIFICATION	SYMBOL
Traces	Tr
Fine	F
Medium	M
Coarse	C
Concretions	cc
Rootlets	rt
Lignite fragments	lg
Shale fragments	sh
Sandstone fragments	sds
Shell fragments	slf
Organic matter	O
Clay strata or lenses	CS
Silt strata or lenses	SIS
Sand strata or lenses	SS
Sandy	S
Gravelly	G
Boulders	B
Slickensides	Sl
Wood	Wd
Oxidized	Ox

NOTES:

FIGURES TO LEFT OF BORING UNDER COLUMN " W OR D_{10}"

Are natural water contents in percent dry weight

When underlined denotes D_{10} size in mm*

FIGURES TO LEFT OF BORING UNDER COLUMNS " LL" AND " PL"

Are liquid and plastic limits, respectively

SYMBOLS TO LEFT OF BORING

▽	Ground-water surface and date observed
Ⓒ	Denotes location of consolidation test**
Ⓢ	Denotes location of consolidated-drained direct shear test**
Ⓡ	Denotes location of consolidated-undrained triaxial compression test**
Ⓠ	Denotes location of unconsolidated-undrained triaxial compression test**
Ⓣ	Denotes location of sample subjected to consolidation test and each of the above three types of shear test**
FW	Denotes free water encountered in boring or sample

FIGURES TO RIGHT OF BORING

Are values of cohesion in lbs./sq.ft. from unconfined compression tests

In parenthesis are driving resistances in blows per foot determined with a standard split spoon sampler (1 3/8" I.D., 2" O.D.) and a 140 lb. driving hammer with a 30" drop

Where underlined with a solid line denotes laboratory permeability in centimeters per second of undisturbed sample

Where underlined with a dashed line denotes laboratory permeability in centimeters per second of sample remoulded to the estimated natural void ratio

*The D_{10} size of a soil is the grain diameter in millimeters of which 10% of the soil is finer, and 90% coarser than D_{10}.

**Results of these tests are available for inspection in the U.S. Army Engineer District Office, if these symbols appear beside the boring logs on the drawings.

Safety is a Part of Your Contract

TYPICAL NOTES:

1. While the borings are representative of subsurface conditions at their respective locations and for their respective vertical reaches, local variations characteristic of the subsurface materials of the region are anticipated and, if encountered, such variations will not be considered as differing materially within the purview of the contract clause entitled "Differing Site Conditions".

2. Ground-water elevations shown on the boring logs represent ground-water surfaces encountered in such borings on the dates shown. Absence of water surface data on certain borings indicates that no ground-water data are available from the boring but does not necessarily mean that ground-water will not be encountered at the locations or within the vertical reaches of such borings.

3. Consistency of cohesive soils shown on the boring logs is based on driller's log and visual, examination and is approximate, except within those vertical reaches of the borings where shear strengths from unconfined compression tests are shown.

4. Unless otherwise noted:

   a. Undisturbed borings, indicated by the letter "U", are taken with a 5" I.D. Piston Type Sampler.

   b. General type borings are taken with a 1 7/8" I.D. Tube Sampler and/or a 1 3/8" I.D. Split Spoon Sampler.

C·A·D

REVISED: 25 JUNE 92

MISSISSIPPI RIVER GULF OUTLET
NEW LOCK AND CONNECTING CHANNELS
INDUSTRIAL CANAL LOCK REPLACEMENT
FEASIBILITY STUDY

SOIL BORING LEGEND

U.S. ARMY ENGINEER DISTRICT, NEW ORLEANS
CORPS OF ENGINEERS
NEW ORLEANS, LOUISIANA

DESIGNED BY: K.J.T.	PLOT SCALE: 10	PLOT DATE:	CADD FILE: PENTAGON
DRAWN BY: K.J.T.			
CHECKED BY: K.J.T.	DATE: AUG 1995		H-2-40392

UNIFIED SOIL CLASSIFICATION

MAJOR DIVISION		TYPE	LETTER SYMBOL	SYMBOL	TYPICAL NAMES
COARSE GRAINED SOILS (more than half of material is larger than No. 200 sieve size)	GRAVELS (more than half of coarse fraction is larger than No. 4 sieve size)		GW		GRAVEL, Well Graded, gravel-sand mixtures, little or no fines
			GP		GRAVEL, Poorly Graded, gravel-sand mixtures, little or no fines
		GRAVEL WITH FINES (appreciable amount of fines)	GM		SILTY GRAVEL, gravel-sand-silt mixtures
			GC		CLAYEY GRAVEL, gravel-sand-clay mixtures
	SANDS (more than half of coarse fraction is smaller than No. 4 sieve size)	CLEAN SANDS (little or no fines)	SW		SAND, Well-Graded, gravelly sands
			SP		SAND, Poorly-Graded, gravelly sands
		SANDS WITH FINES (appreciable amount of fines)	SM		SILTY SAND, sand-silt mixtures
			SC		CLAYEY SAND, sand-clay mixtures
FINE GRAINED SOILS (more than half the material is smaller than No. 200 sieve size)		SILTS AND CLAYS (liquid limit 50% or less)	ML		SILT & very fine sand, silty or clayey fine sand or clayey silt with slight plasticity
			CL		LEAN CLAY, Sandy Clay, Silty Clay, of low to medium plasticity
			OL		ORGANIC SILTS, and organic silty clays of low plasticity
		SILTS AND CLAYS (liquid limit greater than 50%)	MH		SILT, fine sandy or silty soil with high plasticity
			CH		FAT CLAY, inorganic clay of high plasticity
			OH		ORGANIC CLAYS of medium to high plasticity, organic silts
HIGHLY ORGANIC SOILS			Pt		PEAT, and other highly organic soil
WOOD			Wd		WOOD
SHELLS			Sl		SHELLS
NO SAMPLE			NS		No Sample Retrieved

NOTE: Soils possessing characteristics of two groups are designated by combinations of group symbols.

DESCRIPTIVE SYMBOLS

COLOR	SYMBOL
TAN	T
YELLOW	Y
RED	R
BLACK	Bk
GRAY	Gr
LIGHT GRAY	lGr
DARK GRAY	dGr
BROWN	Br
LIGHT BROWN	lBr
DARK BROWN	dBr
BROWNISH-GRAY	brGr
GRAYISH-BROWN	gyBr
GREENISH GRAY	grGr
GRAYISH-GREEN	gyGn
GREEN	Gn
BLUE	Bl
BLUE GREEN	BlGn
WHITE	Wh
MOTTLED	Mot

CONSISTENCY FOR COHESIVE SOILS		
CONSISTENCY	COHESION IN LBS./SQ.FT. FROM UNCONFINED COMPRESSION TEST	SYMBOL
VERY SOFT	< 250	vSo
SOFT	250-500	So
MEDIUM	500-1000	M
STIFF	1000-2000	St
VERY STIFF	2000-4000	vSt
HARD	> 4000	H

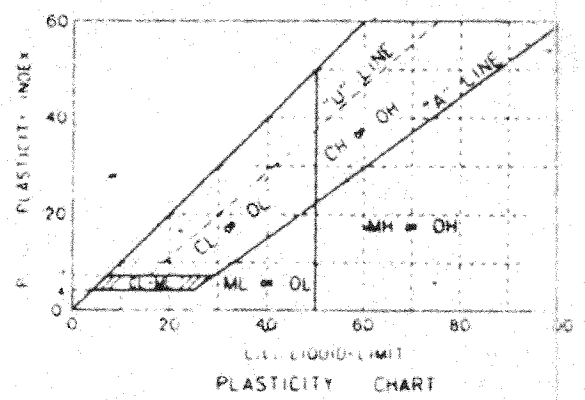

PLASTICITY CHART

For classification of fine grained soils in accordance with ASTM D 2487

MODIFICATIONS	
MODIFICATION	SYMBOL
Traces	tr
Fine	f
Medium	m
Coarse	c
Concretions	cc
Rootlets	rt
Lignite fragments	lg
Shale fragments	sh
Sandstone fragments	sds
Shell fragments	slf
Organic matter	O
Clay strata or lenses	CS
Silt strata or lenses	SIS
Sand strata or lenses	SS
Sandy	S
Gravelly	G
Boulders	B
Sidewalls	sl
Wood	wd
Oxidized	Ox

NOTES:

FIGURES TO LEFT OF BORING UNDER

Are natural water contents in percent o

When underlined denotes D_{10} size in mm*

FIGURES TO LEFT OF BORING UNDER

Are liquid and plastic limits, respectively

SYMBOLS TO LEFT OF BORING

- ▽ Ground-water surface and date ob
- © Denotes location of consolidation
- Ⓢ Denotes location of consolidated-q
- Ⓡ Denotes location of consolidated-u
- Ⓤ Denotes location of unconsolidated
- Ⓣ Denotes location of sample subjec the above three types of shear t
- FW Denotes free water encountered

FIGURES TO RIGHT OF BORING

Are values of cohesion in lbs./sq.ft. from

In parenthesis are driving resistances i standard split spoon sampler (1 3/8" I.D., 2" with a 30 lb. drop

Where underlined with a solid line denote meters per second of undisturbed sample

Where underlined with a dashed line den meters per second of sample remoulded to

*The D_{10} size of a soil is the grain diameter in which 10% of the soil is finer, and 90% coarser than D_{10}.

**Results of these tests are available for inspec Office. If these symbols appear beside the boring

TYPICAL NOTES:

1. While the borings are representative of subsurface conditions at their respective locations, variations in the subsurface conditions between and beyond the borings are probable. Between borings and within the vertical reaches, local variations characteristic of the subsurface materials of the area may occur. If encountered, such variations will not be considered as differing materially within the meaning of the clause entitled "Differing Site Conditions".

2. Ground-water elevations shown on the boring logs represent ground-water surfaces encountered on the dates shown. Absence of water surface data on certain borings indicates that no water was available from the boring but does not necessarily mean that ground-water will not be encountered at these locations or within the vertical reaches of such borings.

3. Consistency of cohesive soils shown on the boring logs is based on driller's log and visual examination and is approximate, except within those vertical reaches of the borings where shear strength or compression tests are shown.

4. Unless otherwise noted:

   a. Undisturbed borings, indicated by the letter "U", are taken with a 5" I.D. Piston Type Sa

   b. General type borings are taken with a 1 7/8" I.D. Tube Sampler and/or a 1 3/8" I.D. Split Spoon Sampler.