66	.0	.0	64.6	.0	.0	.0

LOAD CASE - 3

PILE	PX K	PY K	PZ K	MX IN-K	MY IN-K	MZ IN-K
1	.0	.0	-10.4	.0	.0	.0
2	.0	.0	-10.4	.0	.0	.0
3	.0	.0	-10.4	.0	.0	.0
4	.0	.0	-10.4	.0	.0	.0
5	.0	.0	-10.4	.0	.0	.0
6	.0	.0	-10.4	.0	.0	.0
7	.0	.0	-10.4	.0	.0	.0
8	.0	.0	-10.4	.0	.0	.0
9	.0	.0	-10.4	.0	.0	.0
10	.0	.0	-10.4	.0	.0	.0
11	.0	.0	-10.4	.0	.0	.0
12	.0	.0	-10.4	.0	.0	.0
13	.0	.0	-10.4	.0	.0	.0
14	.0	.0	-10.4	.0	.0	.0
15	.0	.0	-10.4	.0	.0	.0
16	.0	.0	-10.4	.0	.0	.0
17	.0	.0	-10.4	.0	.0	.0
18	.0	.0	-10.4	.0	.0	.0
19	.0	.0	-10.4	.0	.0	.0
20	.0	.0	-10.4	.0	.0	.0
21	.0	.0	-10.4	.0	.0	.0
22	.0	.0	-10.4	.0	.0	.0
23	.0	.0	-10.4	.0	.0	.0
24	.0	.0	-10.4	.0	.0	.0
25	.0	.0	-10.4	.0	.0	.0
26	.0	.0	-10.4	.0	.0	.0
27	.0	.0	-10.4	.0	.0	.0
28	.0	.0	-10.4	.0	.0	.0
29	.0	.0	-10.4	.0	.0	.0
30	.0	.0	-10.4	.0	.0	.0
31	.0	.0	-10.4	.0	.0	.0
32	.0	.0	-10.4	.0	.0	.0
33	.0	.0	-10.4	.0	.0	.0
34	.0	.0	-10.4	.0	.0	.0
35	.0	.0	-10.4	.0	.0	.0
36	.0	.0	-10.4	.0	.0	.0
37	.0	.0	-10.4	.0	.0	.0
38	.0	.0	-10.4	.0	.0	.0
39	.0	.0	-10.4	.0	.0	.0
40	.0	.0	-10.4	.0	.0	.0
41	.0	.0	-10.4	.0	.0	.0
42	.0	.0	-10.4	.0	.0	.0
43	.0	.0	-10.4	.0	.0	.0
44	.0	.0	-10.4	.0	.0	.0
45	.0	.0	-10.4	.0	.0	.0
46	.0	.0	-10.4	.0	.0	.0
47	.0	.0	-10.4	.0	.0	.0
48	.0	.0	-10.4	.0	.0	.0
49	.0	.0	-10.4	.0	.0	.0
50	.0	.0	-10.4	.0	.0	.0
51	.0	.0	-10.4	.0	.0	.0
52	.0	.0	-10.4	.0	.0	.0
53	.0	.0	-10.4	.0	.0	.0

54	.0	.0	-10.4	.0	.0	.0
55	.0	.0	-10.4	.0	.0	.0
56	.0	.0	-10.4	.0	.0	.0
57	.0	.0	-10.4	.0	.0	.0
58	.0	.0	-10.4	.0	.0	.0
59	.0	.0	-10.4	.0	.0	.0
60	.0	.0	-10.4	.0	.0	.0
61	.0	.0	-10.4	.0	.0	.0
62	.0	.0	-10.4	.0	.0	.0
63	.0	.0	-10.4	.0	.0	.0
64	.0	.0	-10.4	.0	.0	.0
65	.0	.0	-10.4	.0	.0	.0
66	.0	.0	-10.4	.0	.0	.0

COMPUTATION SHEET

PROJECT	PAGE OF	COMPUTED BY JAW	DATE 5-02
SUBJECT		CHECKED BY	DATE

Results from CPGA (FS of 2 will be used due to pile test)

Max Operating Case

Pile force = 115.3k (FS of 2) = 115.3 tons (Compression)

Construction Case

Pile force = 64.6k (FS of 2) = 64.6 tons (compression)

Dewatered Case

Pile force = -10.4k (FS of 2) = 10.4 tons (tension)

Tip elevation for max compression, 122 tons = -85.0 (Q-case)

Tip elevation for max tension, 10.4 tons = -49 (S-case)

Use tip of -85.0 (seat in sand)

Pile length = -20 - -85 = 65'

Use 14"x14" piles, 65 ft long

COMPUTATION SHEET

PROJECT BAYOU SORREL LOCK FEASIBILITY	PAGE OF	COMPUTED BY CBW	DATE 4/01
SUBJECT		CHECKED BY	DATE

T-WALL MONOLITH LAYOUT

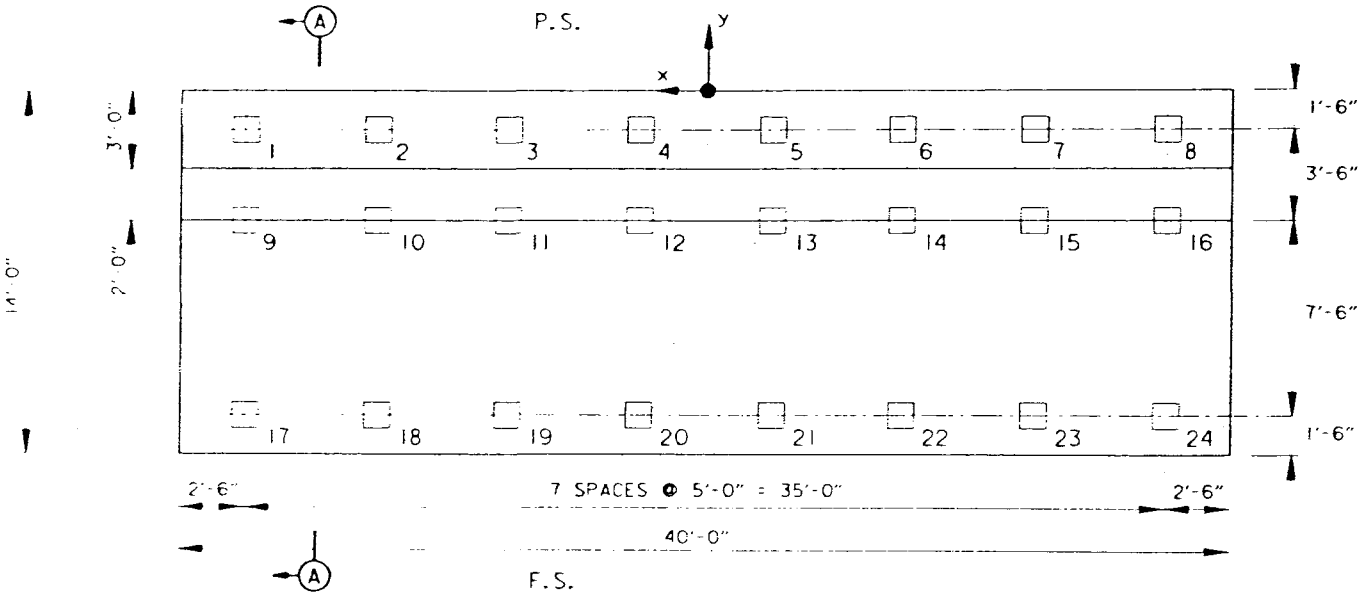

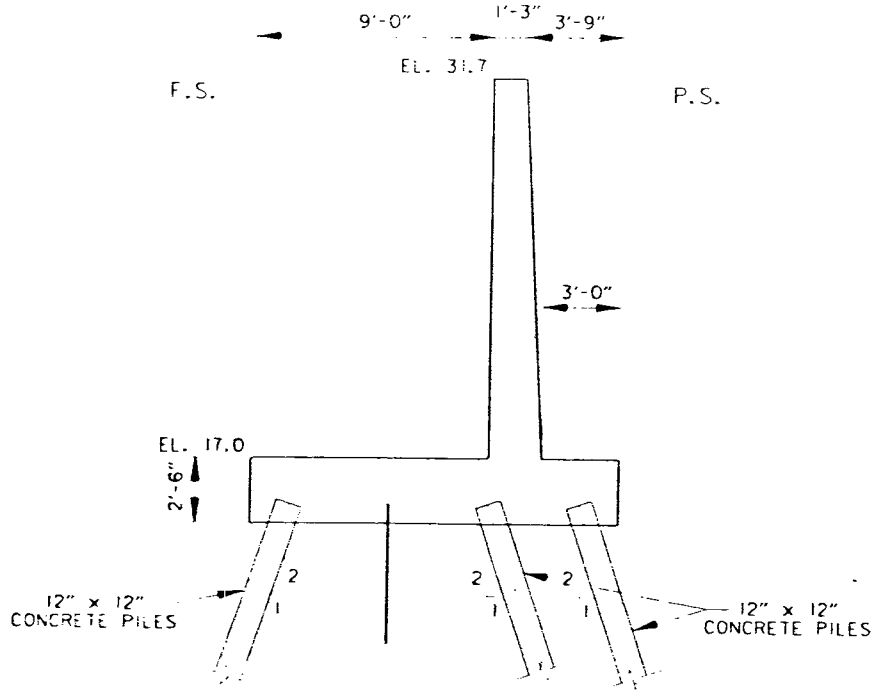

SECTION (A)

COMPUTATION SHEET

PROJECT BAYOU SORREL LOCK FEASIBILITY	PAGE OF	COMPUTED BY	DATE
SUBJECT		CHECKED BY	DATE

T-WALL LOADS

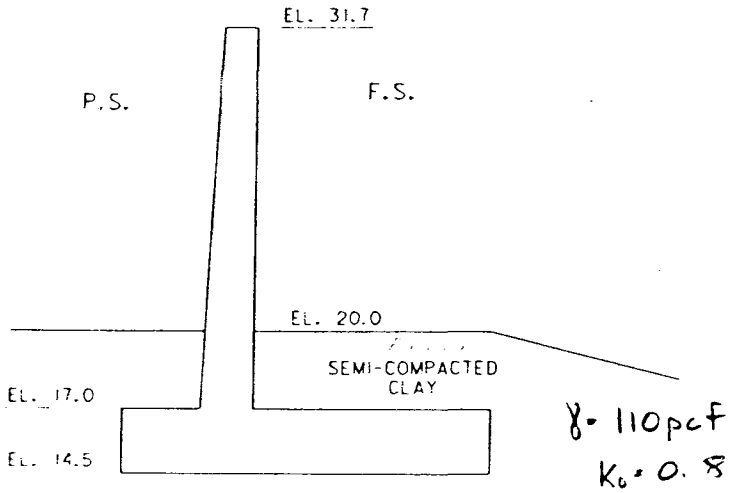

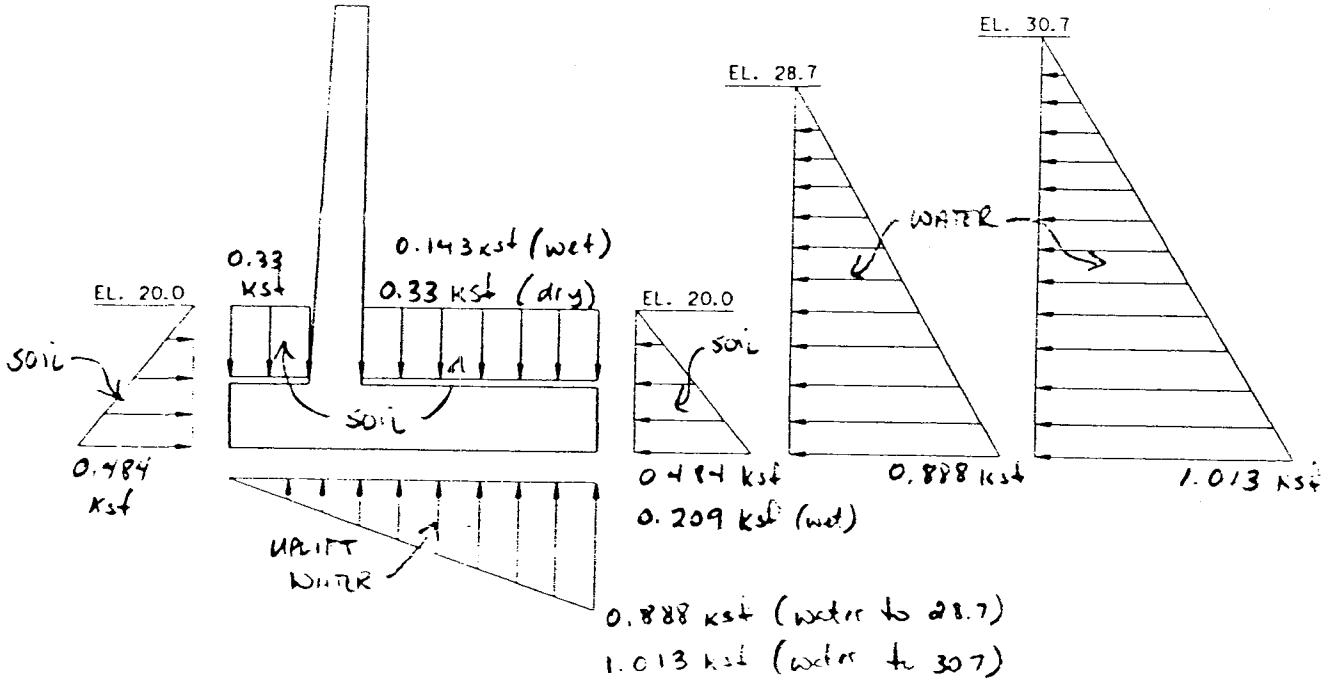

Bayou Sorrel Lock Feasibility
T-wall Loads

El at Top of Stem:	31.7		Length of Monolith:	40	ft
El Still Water:	28.7		Area of Stem (horz):	65.00	ft²
El at Top of Slab:	17		Stem Width @ top:	1.25	ft
El at Bottom of Slab:	14.5		Height of Stem:	14.7	ft
Area of Slab:	560	ft²	Average Stem Width:	1.63	ft
Depth of Slab:	2.5	ft	Width of Monolith:	14	ft
F.S. Slab Width:	9	ft	El. At Top of Soil:	20	
P.S. Slab Width:	3	ft	Unit Wgt of Dry Soil:	0.11	kcf
Wgt of Conc.:	0.15	kcf	Unit Wgt of Wet Soil:	0.0475	kcf

Case 1 Dead Loads

Item	Fx	Fy	Fz	x	y	z	Mx	My	Mz
Concrete Base			210.0		-7.0		-1,470.0		
Concrete Stem			143.3		-3.8		-546.4		
Horizontal Soil P.S. (dry)		-53.2				-1.8	-97.6		
Vertical Soil P.S. (dry)			39.6		-1.5		-59.4		
Horizontal Soil F.S. (dry)		53.2				-1.8	97.6		
Vertical Soil F.S. (dry)			118.8		-9.5		-487.4		
Total:	**0.0**	**0.0**	**511.7**				**-2,563.2**	**0.0**	**0.0**

Case 2 Normal Operation Case, no wind, and Pervious Uplift

El of Water on Wall:	28.7 ft		Length of Monolith:	40 ft
El of Top of Slab:	17 ft			
El of Bottom of Slab:	14.5 ft			
Water Pressure at Slab Bottom:		0.8875 ksf		
Horizontal Force:	6.3 k/f			
Water Pressure at Top of Slab:		0.73125 ksf		
Vertical Force:	6.6 k/f			
Pervious Uplift				
Uplift Force:	-6.2 k/f			

Item	Fx	Fy	Fz	x	y	z	Mx	My	Mz
Horizontal Force		252.1				4.7	1,193.0		
Vertical Force			263.3		-9.5		-2,500.9		
Pervious Uplift			-248.5		-9.3		2,319.3		
Horizontal Soil F.S. (wet)		23.0				1.8	42.1		
Vertical Soil F.S. (wet)			51.3		-9.5		-487.4		
Concrete & P.S. Soil (LC1)			392.9				-2,173.4		
Total:	**0.0**	**275.0**	**459.0**				**-1,607.1**	**0.0**	**0.0**

Case 3 Max Water Case, no wind, and Pervious Uplift (75% Forces)

El of Water on Wall:	30.7		Length of Monolith:	40 ft
El of Top of Slab:	17			
El of Bottom of Slab:	14.5			
Water Pressure at Slab Bottom:		1.0125 ksf		
Horizontal Force:	8.2 k/f			
Water Pressure at Top of Slab:		0.85625 ksf		
Vertical Force:	7.7 k/f			
Impervious Uplift Force:	-7.1 k/f			

Item	Fx	Fy	Fz	x	y	z	Mx	My	Mz
Horizontal Force		328.1				5.4	1,771.5		
Vertical Force			308.3		-9.5		-2,928.4		
Pervious Uplift			-283.5		-9.3		2,646.0		
Horizontal Soil F.S. (wet)		23.0				1.8	42.1		
Vertical Soil F.S. (wet)			51.3		-9.5		-487.4		
Concrete & P.S. Soil (LC1)			392.9				-2,173.4		
Total:	**0.0**	**263.3**	**351.7**				**-847.2**	**0.0**	**0.0**

```
100 BAYOU SORREL LOCK FEASIBILITY STUDY -
110 T-WALL SECTION DESIGNED W/ 12"x12" CONCRETE PILES
120 PROF 4074 1728 1728 144 2 0 ALL
130 SOIL ES 0.18 L 76 0 ALL
140 DLS S 65 65 444.5 148.7 101.0 957.2 674.2 H 12.0 ALL
150 ASC S 144.0 288.0 .749 .779 2.0 0.0 ALL
160 BATTER 2 1 TO 16
165 BATTER 2 17 TO 24
170 ANGLE 0 1 TO 16
180 ANGLE 270 17 TO 24
200 PILE 1 17.5 -1.5 0 2 12.5 -1.5 0 3 7.5 -1.5 0
210 PILE 4 2.5 -1.5 0 5 -2.5 -1.5 0 6 -7.5 -1.5 0
220 PILE 7 -12.5 -1.5 0 8 -17.5 -1.5 0 9 17.5 -6.5 0
225 PILE 10 12.5 -6.5 0 11 7.5 -6.5 0 12 2.5 -6.5 0
226 PILE 13 -2.5 -6.5 0 14 -7.5 -6.5 0 15 -12.5 -6.5 0
227 PILE 16 -17.5 -6.5 0 17 17.5 -12.5 0 18 12.5 -12.5 0
228 PILE 19 7.5 -12.5 0 20 2.5 -12.5 0 21 -2.5 -12.5 0
229 PILE 22 -7.5 -12.5 0 23 -12.5 -12.5 0 24 -17.5 -12.5 0
230 LOAD 1 0 0 511.7 -2563.2 0 0
240 LOAD 2 0 275.0 459.0 -1607.1 0 0
250 LOAD 3 0 263.3 351.7 -847.2 0 0
270 FOUT 1 2 3 4 5 6 7 TWAL.OUT
280 PFO ALL
```

```
*****************************
* CORPS PROGRAM  #  X0080     *  CPGA - CASE PILE GROUP ANALYSIS PROGRAM
* VERSION NUMBER # 86/09/02-A *  RUN DATE 03-23-01    RUN TIME 12:52:51
*****************************
```

BAYOU SORREL LOCK FEASIBILITY STUDY
T-WALL SECTION DESIGNED W/ 12"x12" CONCRETE PILES

THERE ARE 24 PILES AND
3 LOAD CASES IN THIS RUN.

ALL PILE COORDINATES ARE CONTAINED WITHIN A BOX

	X	Y	Z
WITH DIAGONAL COORDINATES = (	-17.50 ,	-12.50 ,	.00)
(	17.50 ,	-1.50 ,	.00)

****

PILE PROPERTIES AS INPUT

E KSI	I1 IN**4	I2 IN**4	A IN**2	C33	B66
.41740E+04	.17280E+04	.17280E+04	.14400E+03	.20000E+01	.00000E+00

THESE PILE PROPERTIES APPLY TO THE FOLLOWING PILES -

ALL

****

SOIL DESCRIPTIONS AS INPUT

ES	ESOIL K/IN**2	LENGTH	L FT	LU FT
	.18000E+00	L	.76000E+02	.00000E+00

THIS SOIL DESCRIPTION APPLIES TO THE FOLLOWING PILES -

ALL

****

PILE GEOMETRY AS INPUT AND/OR GENERATED

NUM	X FT	Y FT	Z FT	BATTER	ANGLE	LENGTH FT	FIXITY
1	17.50	-1.50	.00	2.00	90.00	76.00	P
2	12.50	-1.50	.00	2.00	90.00	76.00	P
3	7.50	-1.50	.00	2.00	90.00	76.00	P
4	2.50	-1.50	.00	2.00	90.00	76.00	P

5	-2.50	-1.50	.00	2.00	90.00	76.00	P
6	-7.50	-1.50	.00	2.00	90.00	76.00	P
7	-12.50	-1.50	.00	2.00	90.00	76.00	P
8	-17.50	-1.50	.00	2.00	90.00	76.00	P
9	17.50	-6.50	.00	2.00	90.00	76.00	P
10	12.50	-6.50	.00	2.00	90.00	76.00	P
11	7.50	-6.50	.00	2.00	90.00	76.00	P
12	2.50	-6.50	.00	2.00	90.00	76.00	P
13	-2.50	-6.50	.00	2.00	90.00	76.00	P
14	-7.50	-6.50	.00	2.00	90.00	76.00	P
15	-12.50	-6.50	.00	2.00	90.00	76.00	P
16	-17.50	-6.50	.00	2.00	90.00	76.00	P
17	17.50	-12.50	.00	2.00	270.00	76.00	P
18	12.50	-12.50	.00	2.00	270.00	76.00	P
19	7.50	-12.50	.00	2.00	270.00	76.00	P
20	2.50	-12.50	.00	2.00	270.00	76.00	P
21	-2.50	-12.50	.00	2.00	270.00	76.00	P
22	-7.50	-12.50	.00	2.00	270.00	76.00	P
23	-12.50	-12.50	.00	2.00	270.00	76.00	P
24	-17.50	-12.50	.00	2.00	270.00	76.00	P

						1824.00	

****

APPLIED LOADS

LOAD CASE	PX K	PY K	PZ K	MX FT-K	MY FT-K	MZ FT-K
1	.0	.0	511.7	-2563.2	.0	.0
2	.0	275.0	459.0	-1607.1	.0	.0
3	.0	263.3	351.7	-847.2	.0	.0

****

ORIGINAL PILE GROUP STIFFNESS MATRIX

.24157E-03	-.20290E-03	-.30838E-03	.98341E-02	.46566E-09	.19809E+05
-.20290E-03	.63686E+04	.40847E+04	.22057E+06	.00000E+00	.00000E+00
-.30838E-03	.40847E+04	.24750E+05	-.20295E+07	.00000E+00	.00000E+00
.98341E-02	.22057E+06	-.20295E+07	.23849E+09	.00000E+00	-.80000E+01
.11642E-08	.00000E+00	-.15625E-01	.00000E+00	.46777E+09	-.77200E+08
.19809E+05	.39063E-02	.00000E+00	-.30000E+01	-.77200E+08	.12269E+09

LOAD CASE 1. NUMBER OF FAILURES = 0. NUMBER OF PILES IN TENSION = 8.

LOAD CASE 2. NUMBER OF FAILURES = 0. NUMBER OF PILES IN TENSION = 8.

LOAD CASE 3. NUMBER OF FAILURES = 0. NUMBER OF PILES IN TENSION = 8.

****

PILE CAP DISPLACEMENTS

LOAD CASE	DX IN	DY IN	DZ IN	RX RAD	RY RAD	RZ RAD
1	.1709E-07	-.1209E+00	.1298E+00	.1087E-02	.9935E-11	.3393E-10
2	.4646E-07	.4091E-01	.6820E-02	-.6066E-04	-.1640E-11	-.1132E-10
3	.4153E-07	.4341E-01	.8512E-03	-.7554E-04	-.1798E-11	-.1107E-10

****

PILE FORCES IN LOCAL GEOMETRY

M1 & M2 NOT AT PILE HEAD FOR PINNED PILES
* INDICATES PILE FAILURE
# INDICATES CBF BASED ON MOMENTS DUE TO
(F3*EMIN) FOR CONCRETE PILES
B INDICATES BUCKLING CONTROLS

LOAD CASE - 1

PILE	F1 K	F2 K	F3 K	M1 IN-K	M2 IN-K	M3 IN-K	ALF	CBF	ASC KSI	AST KSI	
1	-1.6	.0	57.3	.0	57.1	.0	.88	.35	1.37	.95	#
2	-1.6	.0	57.3	.0	57.1	.0	.88	.35	1.37	.95	#
3	-1.6	.0	57.3	.0	57.1	.0	.88	.35	1.37	.95	#
4	-1.6	.0	57.3	.0	57.1	.0	.88	.35	1.37	.95	#
5	-1.6	.0	57.3	.0	57.1	.0	.88	.35	1.37	.95	#
6	-1.6	.0	57.3	.0	57.1	.0	.88	.35	1.37	.95	#
7	-1.6	.0	57.3	.0	57.1	.0	.88	.35	1.37	.95	#
8	-1.6	.0	57.3	.0	57.1	.0	.88	.35	1.37	.95	#
9	-1.3	.0	-17.8	.0	46.5	.0	.27	.51	.82	.46	
10	-1.3	.0	-17.8	.0	46.5	.0	.27	.51	.82	.46	
11	-1.3	.0	-17.8	.0	46.5	.0	.27	.51	.82	.46	
12	-1.3	.0	-17.8	.0	46.5	.0	.27	.51	.82	.46	
13	-1.3	.0	-17.8	.0	46.5	.0	.27	.51	.82	.46	
14	-1.3	.0	-17.8	.0	46.5	.0	.27	.51	.82	.46	
15	-1.3	.0	-17.8	.0	46.5	.0	.27	.51	.82	.46	
16	-1.3	.0	-17.8	.0	46.5	.0	.27	.51	.82	.46	
17	1.2	.0	31.2	.0	-44.6	.0	.48	.17	1.15	.81	
18	1.2	.0	31.2	.0	-44.6	.0	.48	.17	1.15	.81	
19	1.2	.0	31.2	.0	-44.6	.0	.48	.17	1.15	.81	
20	1.2	.0	31.2	.0	-44.6	.0	.48	.17	1.15	.81	
21	1.2	.0	31.2	.0	-44.6	.0	.48	.17	1.15	.81	
22	1.2	.0	31.2	.0	-44.6	.0	.48	.17	1.15	.81	
23	1.2	.0	31.2	.0	-44.6	.0	.48	.17	1.15	.81	
24	1.2	.0	31.2	.0	-44.6	.0	.48	.17	1.15	.81	

LOAD CASE - 2

PILE	F1 K	F2 K	F3 K	M1 IN-K	M2 IN-K	M3 IN-K	ALF	CBF	ASC KSI	AST KSI	
1	.3	.0	32.6	.0	-12.0	.0	.50	.15	1.05	.93	#
2	.3	.0	32.6	.0	-12.0	.0	.50	.15	1.05	.93	#

3	.3	.0	32.6	.0	-12.0	.0	.50	.15	1.05	.93	#
4	.3	.0	32.6	.0	-12.0	.0	.50	.15	1.05	.93	#
5	.3	.0	32.6	.0	-12.0	.0	.50	.15	1.05	.93	#
6	.3	.0	32.6	.0	-12.0	.0	.50	.15	1.05	.93	#
7	.3	.0	32.6	.0	-12.0	.0	.50	.15	1.05	.93	#
8	.3	.0	32.6	.0	-12.0	.0	.50	.15	1.05	.93	#
9	.3	.0	36.8	.0	-11.4	.0	.57	.13	1.07	.97	#
10	.3	.0	36.8	.0	-11.4	.0	.57	.13	1.07	.97	#
11	.3	.0	36.8	.0	-11.4	.0	.57	.13	1.07	.97	#
12	.3	.0	36.8	.0	-11.4	.0	.57	.13	1.07	.97	#
13	.3	.0	36.8	.0	-11.4	.0	.57	.13	1.07	.97	#
14	.3	.0	36.8	.0	-11.4	.0	.57	.13	1.07	.97	#
15	.3	.0	36.8	.0	-11.4	.0	.57	.13	1.07	.97	#
16	.3	.0	36.8	.0	-11.4	.0	.57	.13	1.07	.97	#
17	-.4	.0	-5.2	.0	15.8	.0	.08	.16	.80	.66	
18	-.4	.0	-5.2	.0	15.8	.0	.08	.16	.80	.66	
19	-.4	.0	-5.2	.0	15.8	.0	.08	.16	.80	.66	
20	-.4	.0	-5.2	.0	15.8	.0	.08	.16	.80	.66	
21	-.4	.0	-5.2	.0	15.8	.0	.08	.16	.80	.66	
22	-.4	.0	-5.2	.0	15.8	.0	.08	.16	.80	.66	
23	-.4	.0	-5.2	.0	15.8	.0	.08	.16	.80	.66	
24	-.4	.0	-5.2	.0	15.8	.0	.08	.16	.80	.66	

LOAD CASE - 3

PILE	F1 K	F2 K	F3 K	M1 IN-K	M2 IN-K	M3 IN-K	ALF	CBF	ASC KSI	AST KSI	
1	.4	.0	27.5	.0	-13.7	.0	.42	.17	1.02	.89	#
2	.4	.0	27.5	.0	-13.7	.0	.42	.17	1.02	.89	#
3	.4	.0	27.5	.0	-13.7	.0	.42	.17	1.02	.89	#
4	.4	.0	27.5	.0	-13.7	.0	.42	.17	1.02	.89	#
5	.4	.0	27.5	.0	-13.7	.0	.42	.17	1.02	.89	#
6	.4	.0	27.5	.0	-13.7	.0	.42	.17	1.02	.89	#
7	.4	.0	27.5	.0	-13.7	.0	.42	.17	1.02	.89	#
8	.4	.0	27.5	.0	-13.7	.0	.42	.17	1.02	.89	#
9	.4	.0	32.7	.0	-13.0	.0	.50	.15	1.05	.93	#
10	.4	.0	32.7	.0	-13.0	.0	.50	.15	1.05	.93	#
11	.4	.0	32.7	.0	-13.0	.0	.50	.15	1.05	.93	#
12	.4	.0	32.7	.0	-13.0	.0	.50	.15	1.05	.93	#
13	.4	.0	32.7	.0	-13.0	.0	.50	.15	1.05	.93	#
14	.4	.0	32.7	.0	-13.0	.0	.50	.15	1.05	.93	#
15	.4	.0	32.7	.0	-13.0	.0	.50	.15	1.05	.93	#
16	.4	.0	32.7	.0	-13.0	.0	.50	.15	1.05	.93	#
17	-.4	.0	-11.0	.0	16.0	.0	.17	.26	.76	.62	
18	-.4	.0	-11.0	.0	16.0	.0	.17	.26	.76	.62	
19	-.4	.0	-11.0	.0	16.0	.0	.17	.26	.76	.62	
20	-.4	.0	-11.0	.0	16.0	.0	.17	.26	.76	.62	
21	-.4	.0	-11.0	.0	16.0	.0	.17	.26	.76	.62	
22	-.4	.0	-11.0	.0	16.0	.0	.17	.26	.76	.62	
23	-.4	.0	-11.0	.0	16.0	.0	.17	.26	.76	.62	
24	-.4	.0	-11.0	.0	16.0	.0	.17	.26	.76	.62	

****

PILE FORCES IN GLOBAL GEOMETRY

LOAD CASE - 1

PILE	PX K	PY K	PZ K	MX IN-K	MY IN-K	MZ IN-K
1	.0	24.2	51.9	.0	.0	.0
2	.0	24.2	51.9	.0	.0	.0
3	.0	24.2	51.9	.0	.0	.0
4	.0	24.2	51.9	.0	.0	.0
5	.0	24.2	51.9	.0	.0	.0
6	.0	24.2	51.9	.0	.0	.0
7	.0	24.2	51.9	.0	.0	.0
8	.0	24.2	51.9	.0	.0	.0
9	.0	-9.1	-15.3	.0	.0	.0
10	.0	-9.1	-15.3	.0	.0	.0
11	.0	-9.1	-15.3	.0	.0	.0
12	.0	-9.1	-15.3	.0	.0	.0
13	.0	-9.1	-15.3	.0	.0	.0
14	.0	-9.1	-15.3	.0	.0	.0
15	.0	-9.1	-15.3	.0	.0	.0
16	.0	-9.1	-15.3	.0	.0	.0
17	.0	-15.1	27.4	.0	.0	.0
18	.0	-15.1	27.4	.0	.0	.0
19	.0	-15.1	27.4	.0	.0	.0
20	.0	-15.1	27.4	.0	.0	.0
21	.0	-15.1	27.4	.0	.0	.0
22	.0	-15.1	27.4	.0	.0	.0
23	.0	-15.1	27.4	.0	.0	.0
24	.0	-15.1	27.4	.0	.0	.0

LOAD CASE - 2

PILE	PX K	PY K	PZ K	MX IN-K	MY IN-K	MZ IN-K
1	.0	14.9	29.0	.0	.0	.0
2	.0	14.9	29.0	.0	.0	.0
3	.0	14.9	29.0	.0	.0	.0
4	.0	14.9	29.0	.0	.0	.0
5	.0	14.9	29.0	.0	.0	.0
6	.0	14.9	29.0	.0	.0	.0
7	.0	14.9	29.0	.0	.0	.0
8	.0	14.9	29.0	.0	.0	.0
9	.0	16.8	32.8	.0	.0	.0
10	.0	16.8	32.8	.0	.0	.0
11	.0	16.8	32.8	.0	.0	.0
12	.0	16.8	32.8	.0	.0	.0
13	.0	16.8	32.8	.0	.0	.0
14	.0	16.8	32.8	.0	.0	.0
15	.0	16.8	32.8	.0	.0	.0
16	.0	16.8	32.8	.0	.0	.0
17	.0	2.7	-4.5	.0	.0	.0
18	.0	2.7	-4.5	.0	.0	.0
19	.0	2.7	-4.5	.0	.0	.0
20	.0	2.7	-4.5	.0	.0	.0
21	.0	2.7	-4.5	.0	.0	.0

22	.0	2.7	-4.5	.0	.0	.0
23	.0	2.7	-4.5	.0	.0	.0
24	.0	2.7	-4.5	.0	.0	.0

LOAD CASE - 3

PILE	PX K	PY K	PZ K	MX IN-K	MY IN-K	MZ IN-K
1	.0	12.6	24.4	.0	.0	.0
2	.0	12.6	24.4	.0	.0	.0
3	.0	12.6	24.4	.0	.0	.0
4	.0	12.6	24.4	.0	.0	.0
5	.0	12.6	24.4	.0	.0	.0
6	.0	12.6	24.4	.0	.0	.0
7	.0	12.6	24.4	.0	.0	.0
8	.0	12.6	24.4	.0	.0	.0
9	.0	15.0	29.1	.0	.0	.0
10	.0	15.0	29.1	.0	.0	.0
11	.0	15.0	29.1	.0	.0	.0
12	.0	15.0	29.1	.0	.0	.0
13	.0	15.0	29.1	.0	.0	.0
14	.0	15.0	29.1	.0	.0	.0
15	.0	15.0	29.1	.0	.0	.0
16	.0	15.0	29.1	.0	.0	.0
17	.0	5.3	-9.6	.0	.0	.0
18	.0	5.3	-9.6	.0	.0	.0
19	.0	5.3	-9.6	.0	.0	.0
20	.0	5.3	-9.6	.0	.0	.0
21	.0	5.3	-9.6	.0	.0	.0
22	.0	5.3	-9.6	.0	.0	.0
23	.0	5.3	-9.6	.0	.0	.0
24	.0	5.3	-9.6	.0	.0	.0

Bayou Sorrel Lock Feasibility

TWall - Stem Design

T-Wall Properties:

Top of Stem Elevation:	31.7	n.g.v.d.
Top of Base Slab Elevation:	17	n.g.v.d.
Bottom of Base Slab Elevation:	14.5	n.g.v.d.

Soil Properties:

F.S.			P.S.		
Elev.:	20	n.g.v.d.	Elev.:	20.0	n.g.v.d.
Unit Wght:	110	pcf	Unit Wght:	110	pcf
Ko	0.8		Ko	0.8	

Water Properties:

Unit Wght:	62.5	pcf

Load Case	F.S. Elev.	P.S. Elev.	
1	0.0	0.0	
2	28.7	0.0	
3	30.7	0.0	-- Only 75% Used

Loadings

F.S. Soil (dry):

Horizontal Pressure:	264.0	psf (per foot of wall)
Horizontal Force:	396.0	lb (per foot of wall)
Moment @ base:	396.0	ft-lb (per foot of wall)

P.S. Soil (dry):

Horizontal Pressure:	264.0	psf (per foot of wall)
Horizontal Force:	396.0	lb (per foot of wall)
Moment @ base:	396.0	ft-lb (per foot of wall)

F.S. Soil (wet):

Horizontal Pressure:	114.0	psf (per foot of wall)
Horizontal Force:	171.0	lb (per foot of wall)
Moment @ base:	171.0	ft-lb (per foot of wall)

LC 2 F.S. Water:

Horizontal Pressure:	731.25	psf (per foot of wall)
Horizontal Force:	4,277.81	lb (per foot of wall)
Moment @ base:	16,683.47	ft-lb (per foot of wall)

LC 2 P.S. Water:

Horizontal Pressure:	0.00	psf (per foot of wall)
Horizontal Force:	0.00	lb (per foot of wall)
Moment @ base:	0.00	ft-lb (per foot of wall)

LC 3 F.S. Water:

Horizontal Pressure:	856.25	psf (per foot of wall)
Horizontal Force:	5,865.31	lb (per foot of wall)
Moment @ base:	26,784.93	ft-lb (per foot of wall)

LC 3 P.S. Water:

Horizontal Pressure:	0.00	psf (per foot of wall)
Horizontal Force:	0.00	lb (per foot of wall)
Moment @ base:	0.00	ft-lb (per foot of wall)

Load Case No.	Lateral Force (k)	Moment @ Base (ft-k)
1	0.00	0.00
2	4.05	16.46
3	4.23	19.92

Determine Minimum Thickness

Mmax: 19.92 ft-k

Mu: 528.28 in-k -- Apply Corps Factors 1.3 & 1.7

From EM-1110-2-2104, June 92, page D-2:

for 3000 psi concrete

d req'd = 12.80 in

Minimum Thickness: 15.80 in -- d req'd + 3" clear cover

Use Thickness of: 18.00 in