Copyright (C) 1997, Maptech, Inc.

Plan-View

Lots # 3 + # 4 1.5 acres ea.

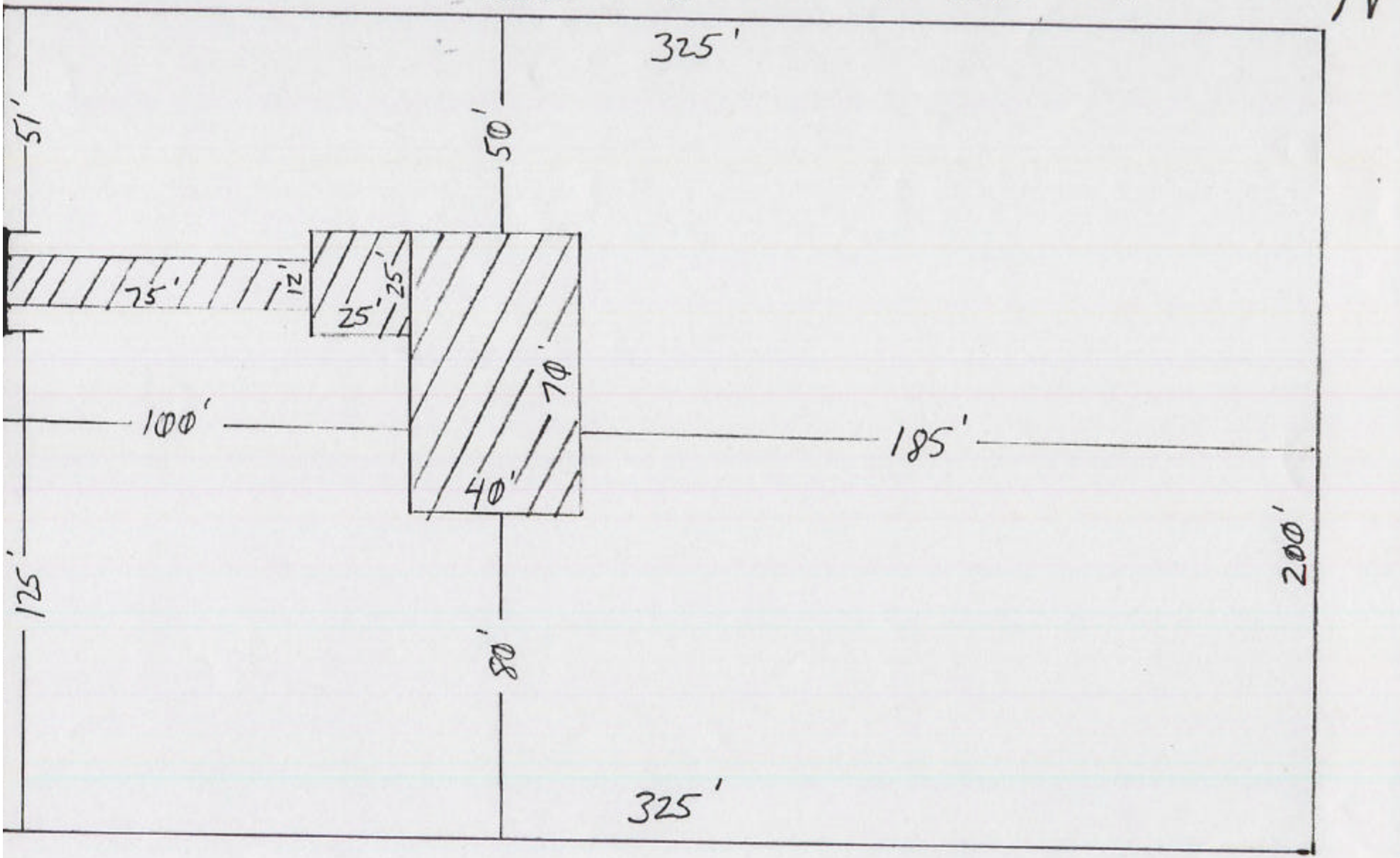

- 36% wetland Scale - 1" = 33.3' -proposed work areas.

Culvert, ditch crossing

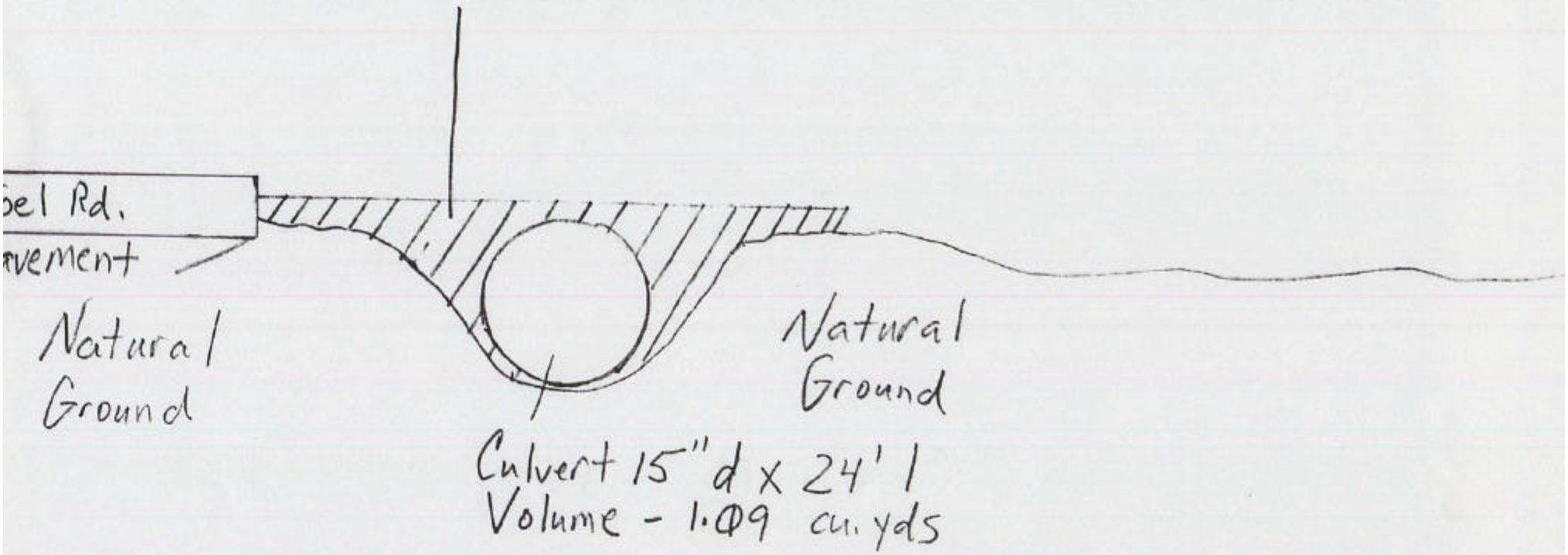

Cross-section drawing no. 1

Parking Area

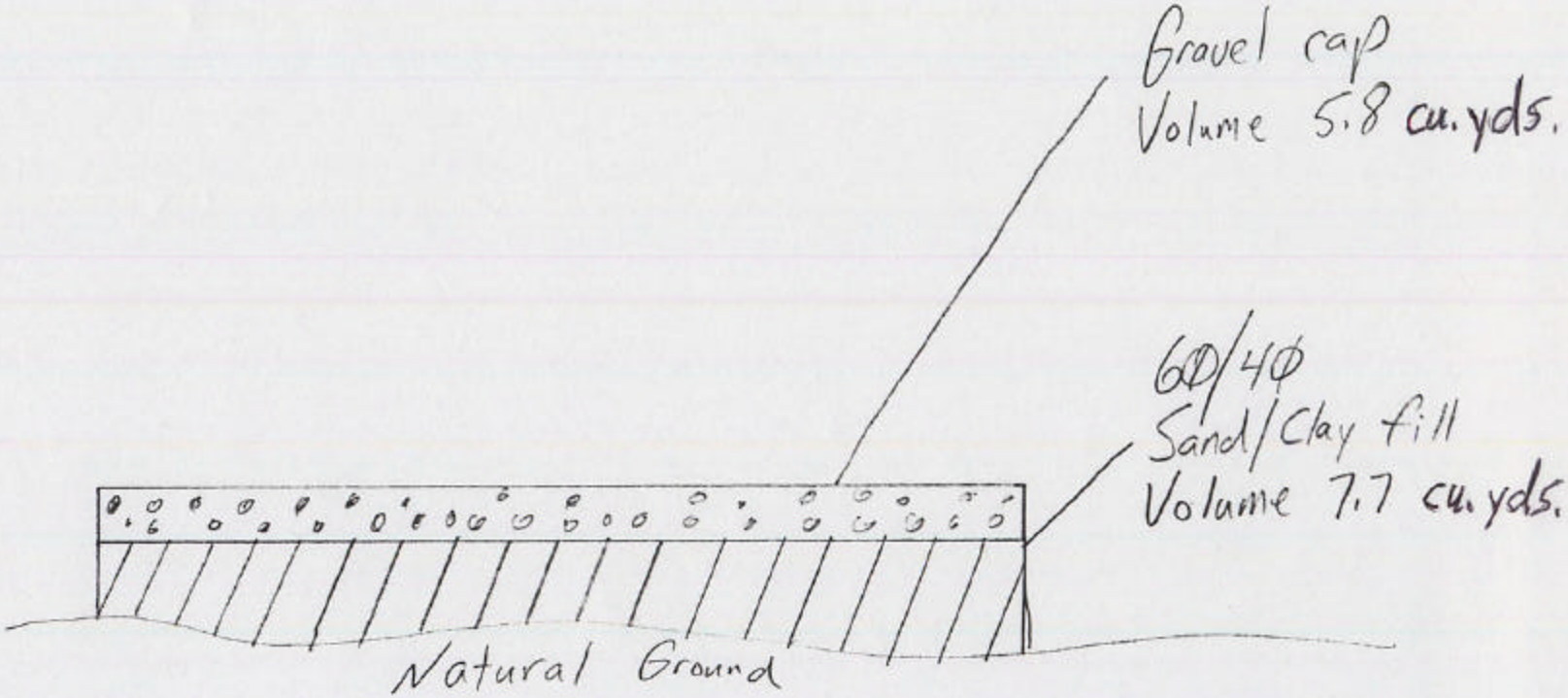

Scale 1" = 5'

Cross-section drawing No. 3

Housepad

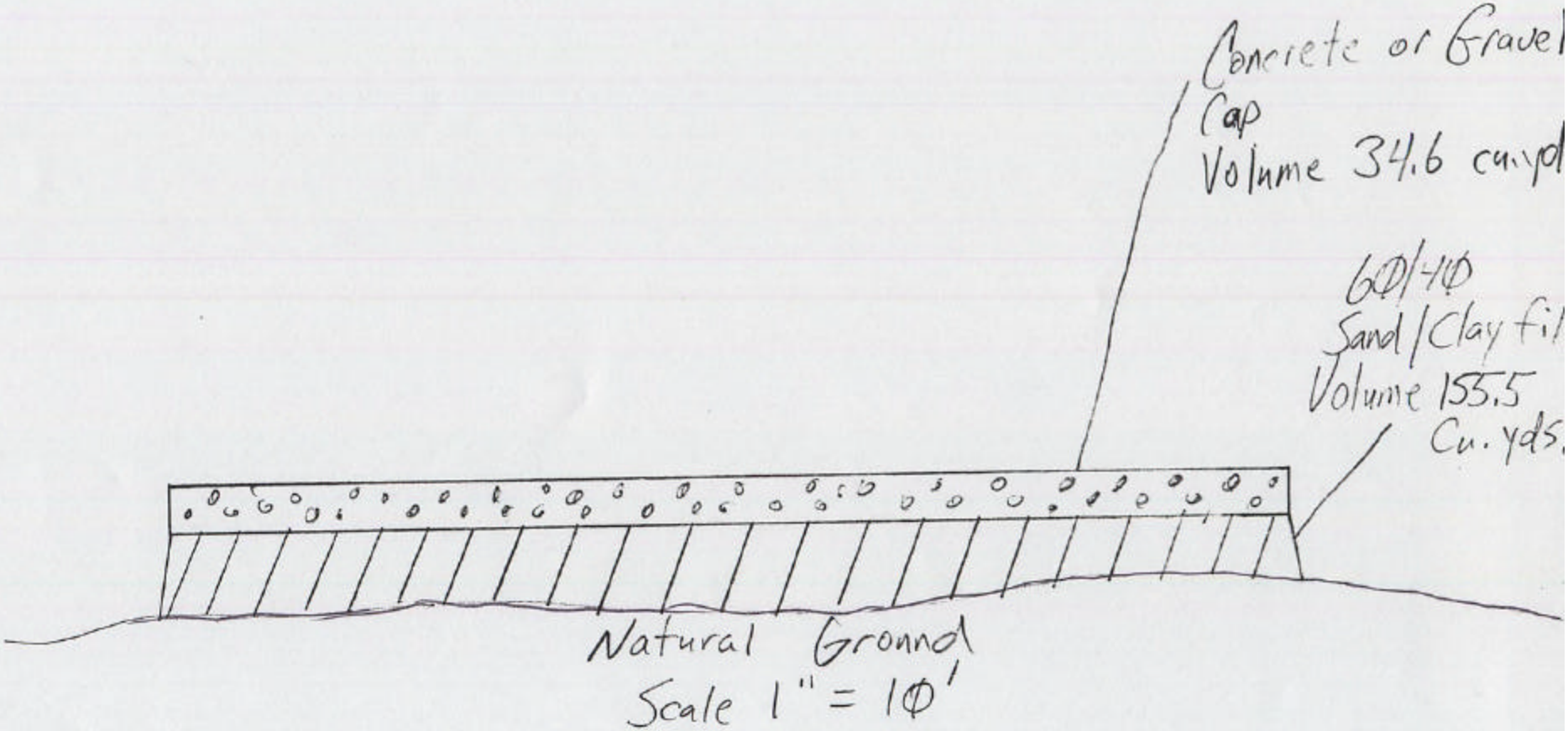

Cross-section drawing No. 4