PROPOSED HURRICANE PROTECTION LEVEE
MAGNOLIA PLANTATION AREA
ST. CHARLES PARISH, LOUISIANA

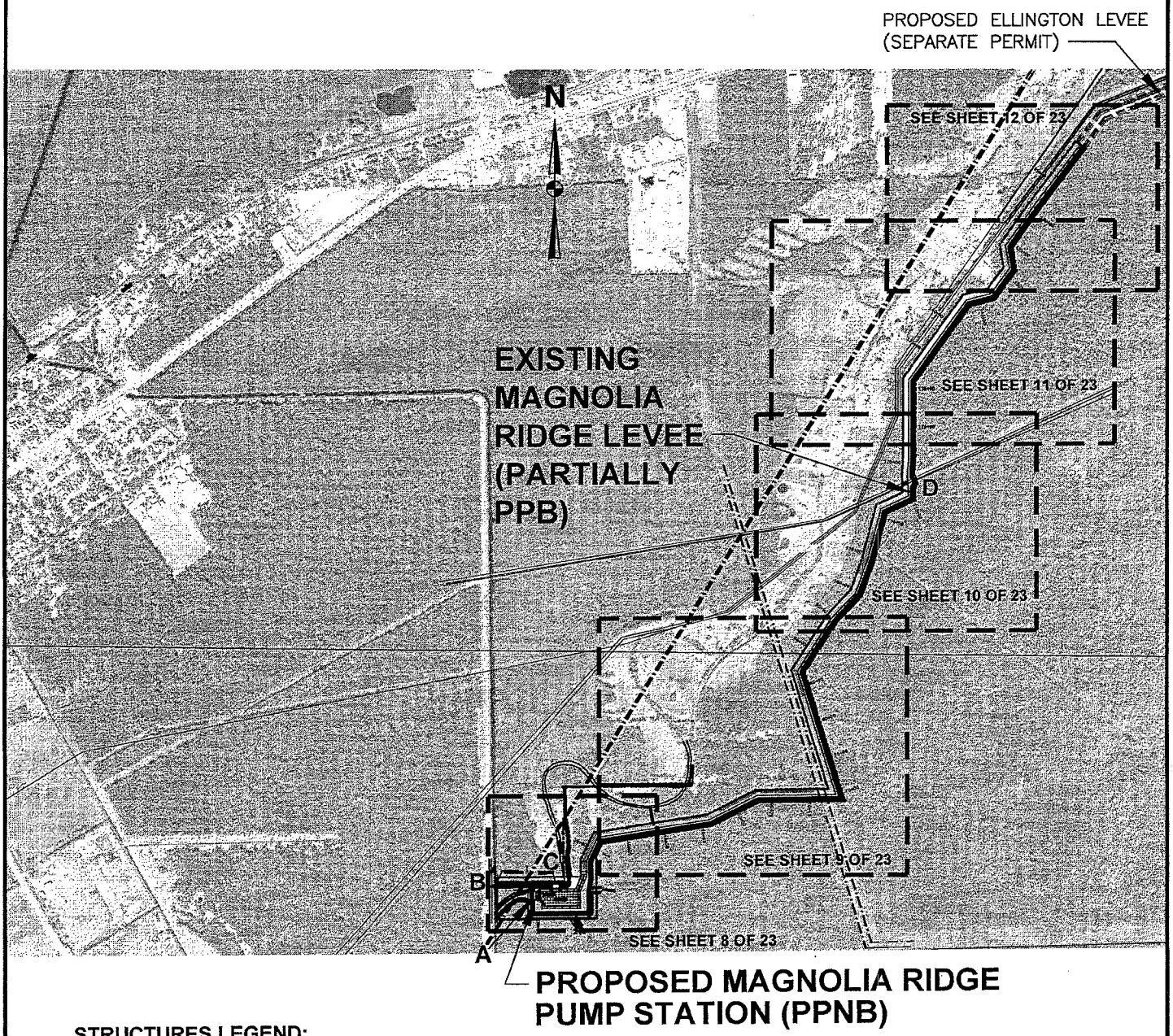

STRUCTURES LEGEND:

- A PROPOSED PUMPING STATION (PPNB)
- B PROPOSED CLOSURE STRUCTURE (PPNB)
- C PROPOSED 100' WEIR
- D PROPOSED PIPELINE CROSSING THRU T-WALL (PPNB)

(PPNB) = PREVIOUSLY PERMITTED & NOT BUILT
(PPB) = PREVIOUSLY PERMITTED & BUILT

SCALE: 1" = 2000'

2000 1000 0 2000'
1500 500
GRAPHIC SCALE

PARISH OF ST. CHARLES
APPLICATION BY: PARISH OF ST. CHARLES
SHEET: 7 OF 23 PLAN KEY SHEET

BURK-KLEINPETER, INC.
ENGINEERS, ARCHITECTS, PLANNERS, ENVIRONMENTAL SCIENTISTS
4176 CANAL STREET, NEW ORLEANS, LOUISIANA 70119-5994
(504) 486-5901 FAX (504) 488-1714

BKI PROJ. NO. 10475-0100 OCTOBER 2012

PROPOSED HURRICANE PROTECTION LEVEE
MAGNOLIA RIDGE AREA
ST. CHARLES PARISH, LOUISIANA

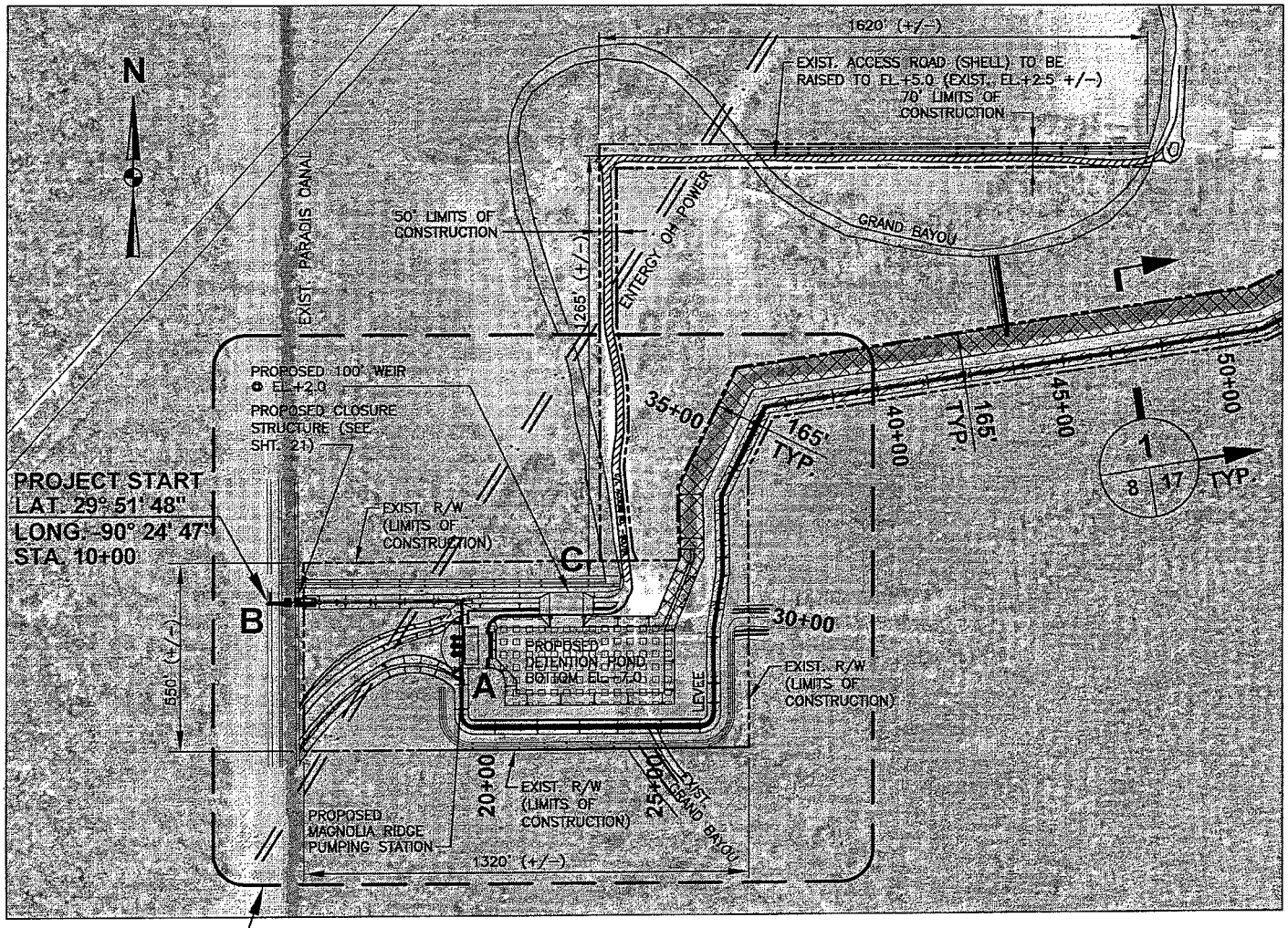

SEE DETAIL 1, SHT. 13

LEGEND:

- LEVEE RIGHT OF WAY
- LEVEE BASELINE
- EXISTING ENTERGY OVERHEAD POWER
- EXCAVATION (PPB)
- FILL (PPB)
- DETENTION POND (PPNB)

PPB — PREVIOUSLY PERMITTED & BUILT
PPNB — PREVIOUSLY PERMITTED & NOT BUILT

SCALE: 1" =500'

400 200 0 500'
500 300 100
GRAPHIC SCALE

NOTE:

UTILITY LINES SHOWN ARE APPROXIMATE POSITIONS OF UTILITY EASEMENTS AND ARE NOT MEANT TO INDICATE ACTUAL OWNERSHIP OR POSITION OF PIPELINE OR POWERLINES.

PARISH OF ST. CHARLES
APPLICATION BY: PARISH OF ST. CHARLES

SHEET: 8 OF 23 PARTIAL PLAN 1 OF 5

BURK-KLEINPETER, INC.
ENGINEERS, ARCHITECTS, PLANNERS, ENVIRONMENTAL SCIENTISTS
4176 CANAL STREET, NEW ORLEANS, LOUISIANA 70119-5994
(504) 486-5901 FAX (504) 488-1714

BKI PROJ. NO. 10475-0100 OCTOBER 2012

PROPOSED HURRICANE PROTECTION LEVEE
MAGNOLIA RIDGE AREA
ST. CHARLES PARISH, LOUISIANA

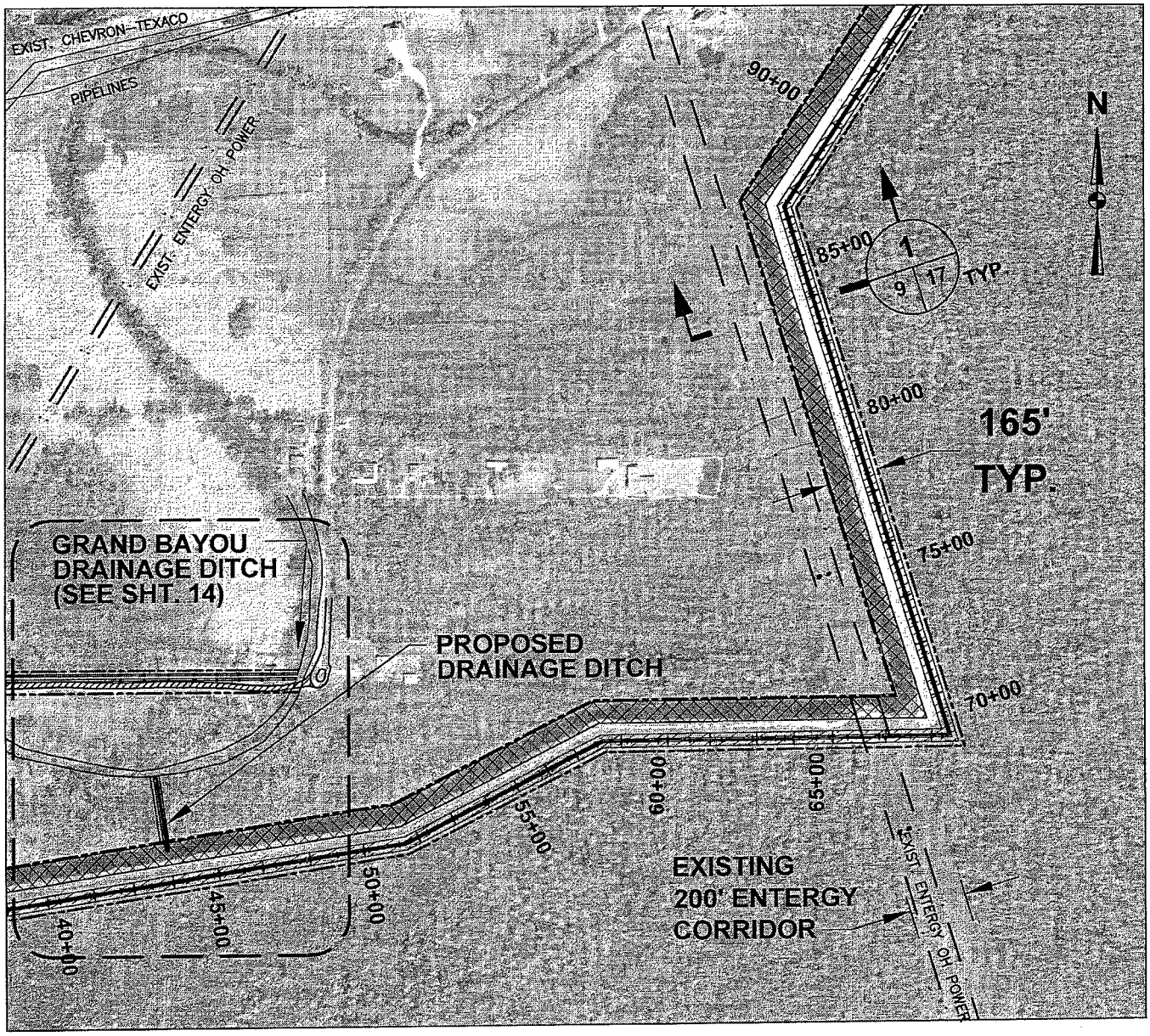

LEGEND:

- LEVEE RIGHT OF WAY
- LEVEE BASELINE
- EXISTING ENTERGY OVERHEAD POWER
- EXCAVATION (PPB)
- FILL (PPB)
- PPB — PREVIOUSLY PERMITTED & BUILT

SCALE: 1" =500'

400 200 0 500'

500 300 100

GRAPHIC SCALE

NOTE:

UTILITY LINES SHOWN ARE APPROXIMATE POSITIONS OF UTILITY EASEMENTS AND ARE NOT MEANT TO INDICATE ACTUAL OWNERSHIP OR POSITION OF PIPELINE OR POWERLINES.

PARISH OF ST. CHARLES

APPLICATION BY: PARISH OF ST. CHARLES

SHEET: 9 OF 23 PARTIAL PLAN 2 OF 5

BURK-KLEINPETER, INC.
ENGINEERS, ARCHITECTS, PLANNERS, ENVIRONMENTAL SCIENTISTS
4176 CANAL STREET, NEW ORLEANS, LOUISIANA 70119-5994
(504) 486-5901 FAX (504) 488-1714

BKI PROJ. NO. 10475-0100 OCTOBER 2012

PROPOSED HURRICANE PROTECTION LEVEE
MAGNOLIA RIDGE AREA
ST. CHARLES PARISH, LOUISIANA

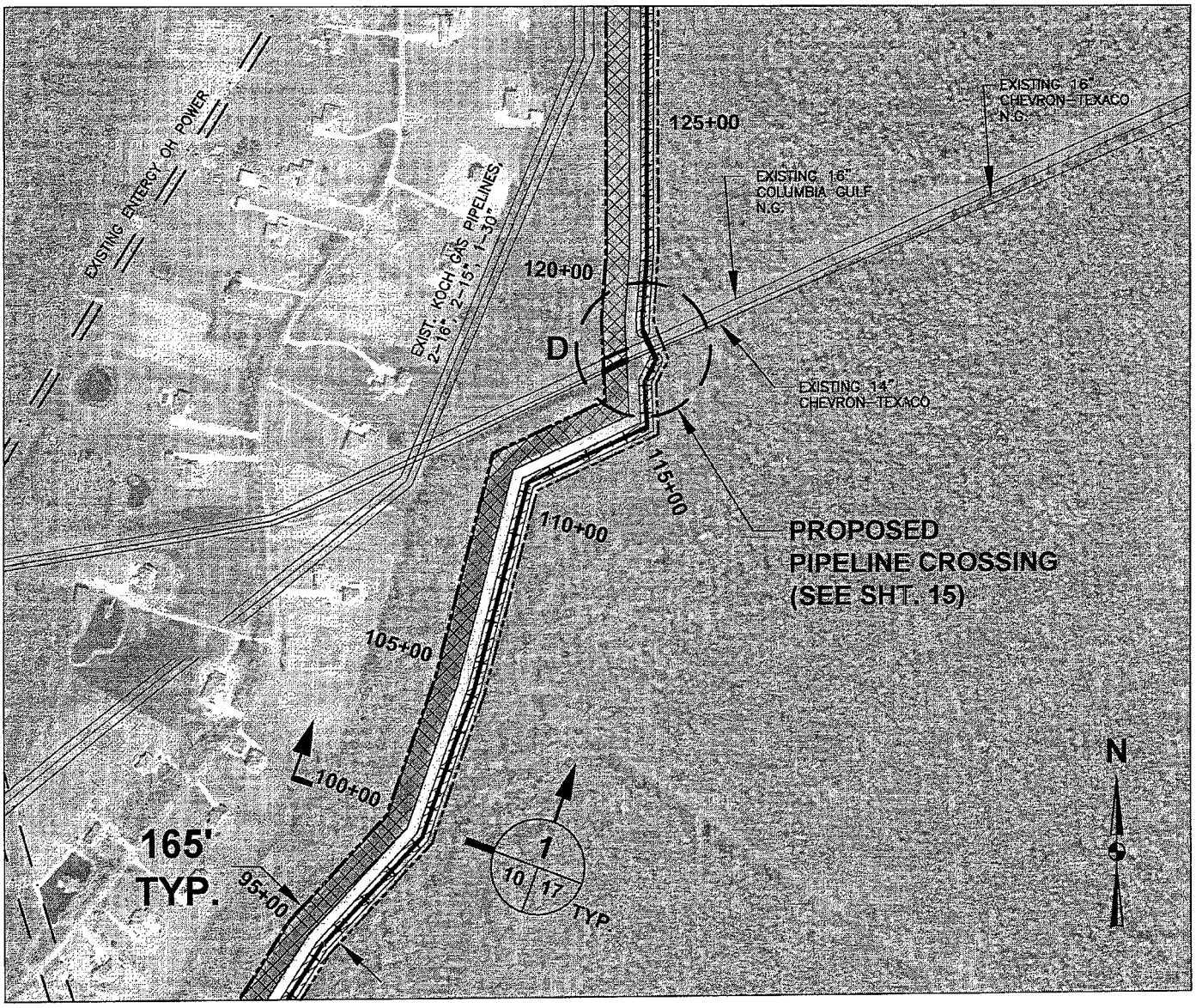

LEGEND:

- LEVEE RIGHT OF WAY
- LEVEE BASELINE
- EXISTING ENTERGY OVERHEAD POWER
- EXCAVATION (PPB)
- FILL (PPB)
- PPB — PREVIOUSLY PERMITTED & BUILT

SCALE: 1" =500'

400 200 0 500'

500 300 100

GRAPHIC SCALE

NOTE:

UTILITY LINES SHOWN ARE APPROXIMATE POSITIONS OF UTILITY EASEMENTS AND ARE NOT MEANT TO INDICATE ACTUAL OWNERSHIP OR POSITION OF PIPELINE OR POWERLINES.

PARISH OF ST. CHARLES

APPLICATION BY: PARISH OF ST. CHARLES

SHEET: 10 OF 23 **PARTIAL PLAN 3 OF 5**

BURK-KLEINPETER, INC.
ENGINEERS, ARCHITECTS, PLANNERS, ENVIRONMENTAL SCIENTISTS
4176 CANAL STREET, NEW ORLEANS, LOUISIANA 70119-5994
(504) 486-5901 FAX (504) 488-1714

BKI PROJ. NO. 10475-0100 OCTOBER 2012

PROPOSED HURRICANE PROTECTION LEVEE
MAGNOLIA RIDGE AREA
ST. CHARLES PARISH, LOUISIANA

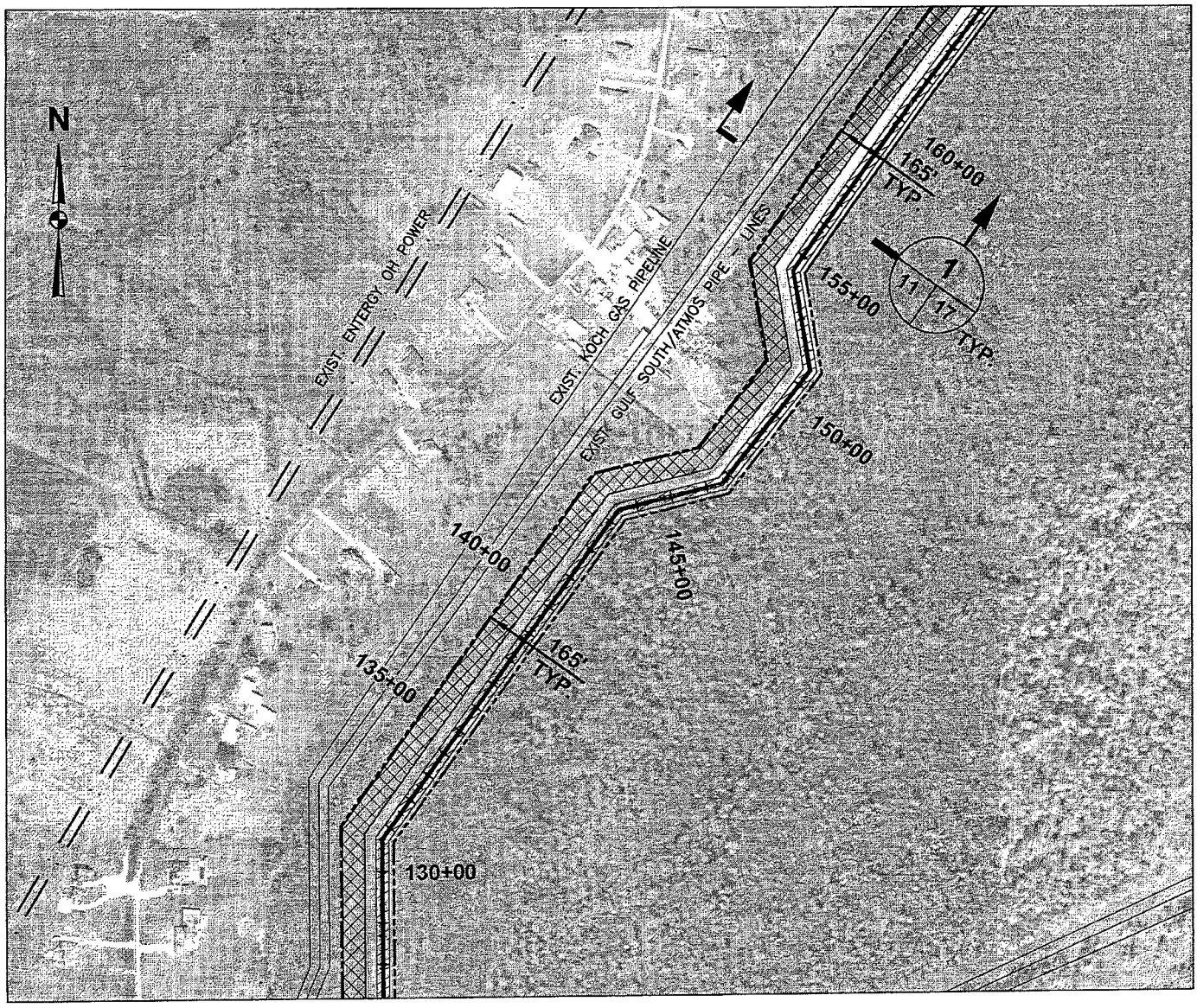

LEGEND:

- LEVEE RIGHT OF WAY
- LEVEE BASELINE
- EXISTING ENTERGY OVERHEAD POWER
- EXCAVATION (PPB)
- FILL (PPB)
- PPB — PREVIOUSLY PERMITTED & BUILT

SCALE: 1" =500'

400 200 0 500'

500 300 100

GRAPHIC SCALE

NOTE:

UTILITY LINES SHOWN ARE APPROXIMATE POSITIONS OF UTILITY EASEMENTS AND ARE NOT MEANT TO INDICATE ACTUAL OWNERSHIP OR POSITION OF PIPELINE OR POWERLINES.

PARISH OF ST. CHARLES

APPLICATION BY: PARISH OF ST. CHARLES

SHEET: 11 OF 23 **PARTIAL PLAN 4 OF 5**

BURK-KLEINPETER, INC.
ENGINEERS, ARCHITECTS, PLANNERS, ENVIRONMENTAL SCIENTISTS
4176 CANAL STREET, NEW ORLEANS, LOUISIANA 70119-5994
(504) 486-5901 FAX (504) 488-1714

BKI PROJ. NO. 10475-0100 OCTOBER 2012

PROPOSED HURRICANE PROTECTION LEVEE
MAGNOLIA RIDGE AREA
ST. CHARLES PARISH, LOUISIANA

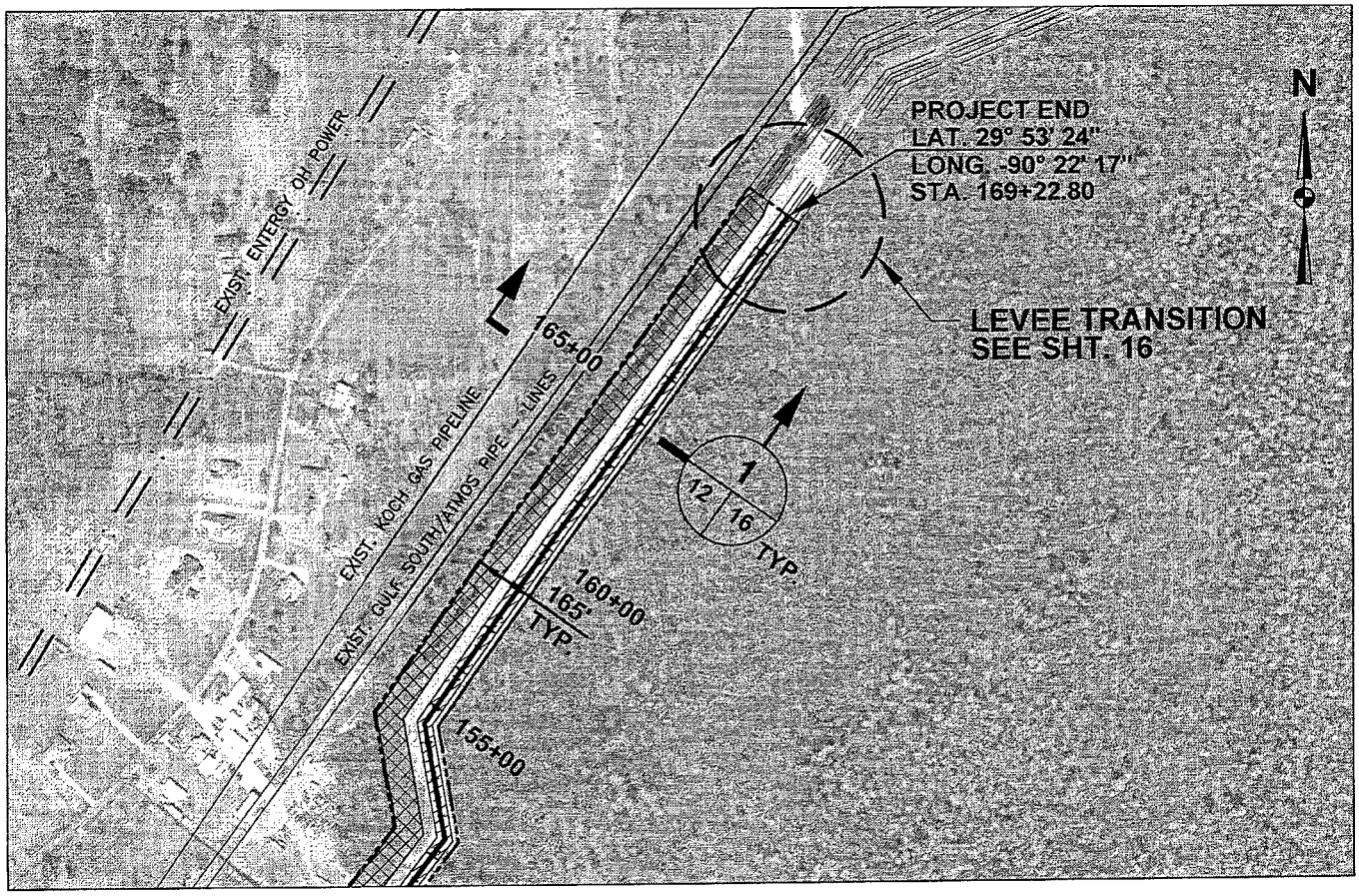

LEGEND:

- LEVEE RIGHT OF WAY
- LEVEE BASELINE
- EXISTING ENTERGY OVERHEAD POWER
- EXCAVATION (PPB)
- FILL (PPB)
- PPB — PREVIOUSLY PERMITTED & BUILT

SCALE: 1" =500'

400 200 0 500'

500 300 100

GRAPHIC SCALE

NOTE:

UTILITY LINES SHOWN ARE APPROXIMATE POSITIONS OF UTILITY EASEMENTS AND ARE NOT MEANT TO INDICATE ACTUAL OWNERSHIP OR POSITION OF PIPELINE OR POWERLINES.

PARISH OF ST. CHARLES

APPLICATION BY: PARISH OF ST. CHARLES

SHEET: 12 OF 23 PARTIAL PLAN 5 of 5

BURK-KLEINPETER, INC.
ENGINEERS, ARCHITECTS, PLANNERS, ENVIRONMENTAL SCIENTISTS
4176 CANAL STREET, NEW ORLEANS, LOUISIANA 70119-5994
(504) 486-5901 FAX (504) 488-1714

BKI PROJ. NO. 10475-0100 OCTOBER 2012

PROPOSED HURRICANE PROTECTION LEVEE
MAGNOLIA RIDGE AREA
ST. CHARLES PARISH, LOUISIANA

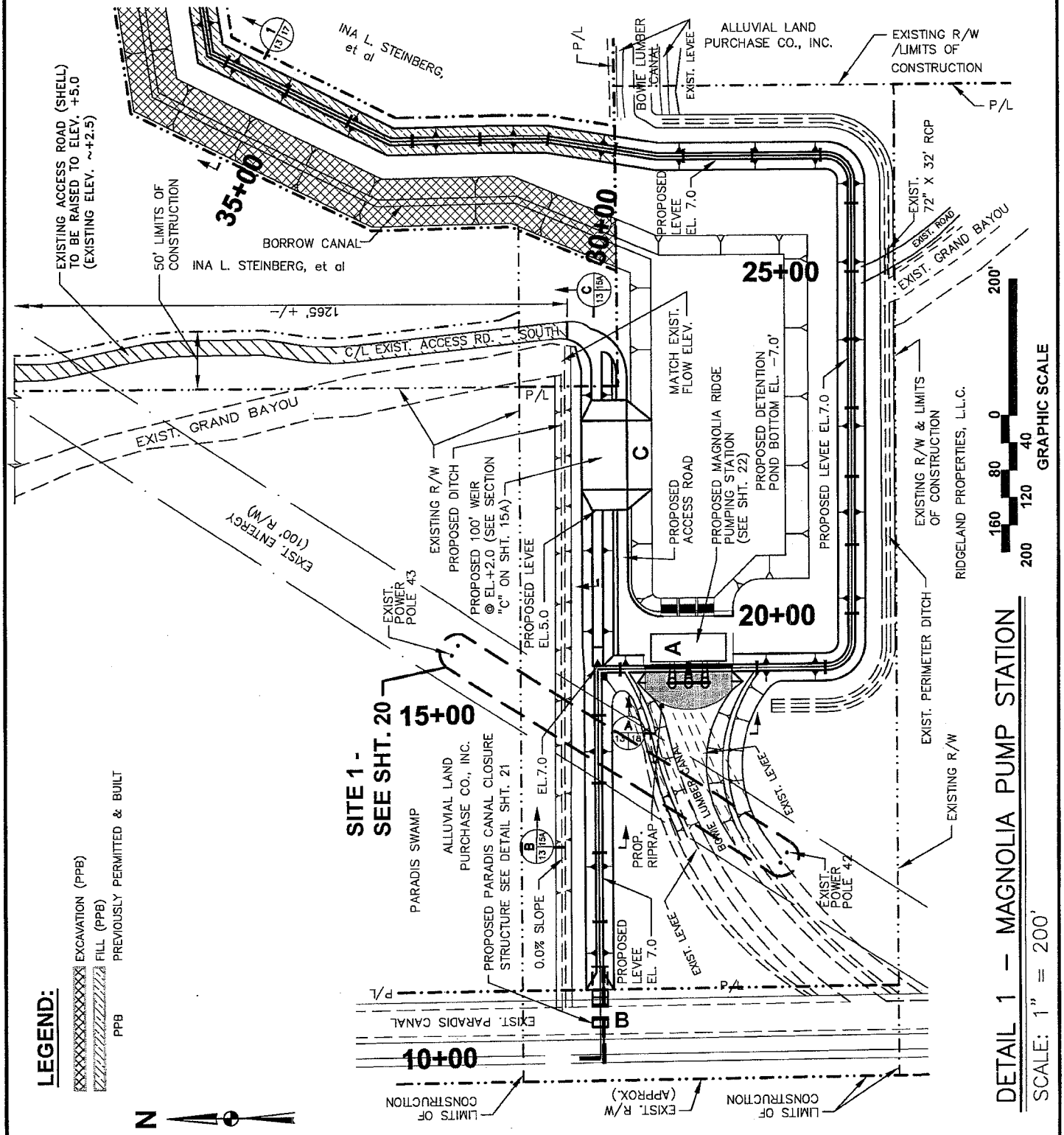

DETAIL 1 – MAGNOLIA PUMP STATION

SCALE: 1" = 200'

REV.	DATE	DESCRIPTION	BY

PARISH OF ST. CHARLES

APPLICATION BY: PARISH OF ST. CHARLES

SHEET: 13 OF 23 **PUMP STATION - SITE PLAN**

BURK-KLEINPETER, INC.
ENGINEERS, ARCHITECTS, PLANNERS, ENVIRONMENTAL SCIENTISTS
4176 CANAL STREET, NEW ORLEANS, LOUISIANA 70119-5994
(504) 486-5901 FAX (504) 488-1714

BKI PROJ. NO. 10475-0100 OCTOBER 2012

PROPOSED HURRICANE PROTECTION LEVEE
MAGNOLIA RIDGE AREA
ST. CHARLES PARISH, LOUISIANA

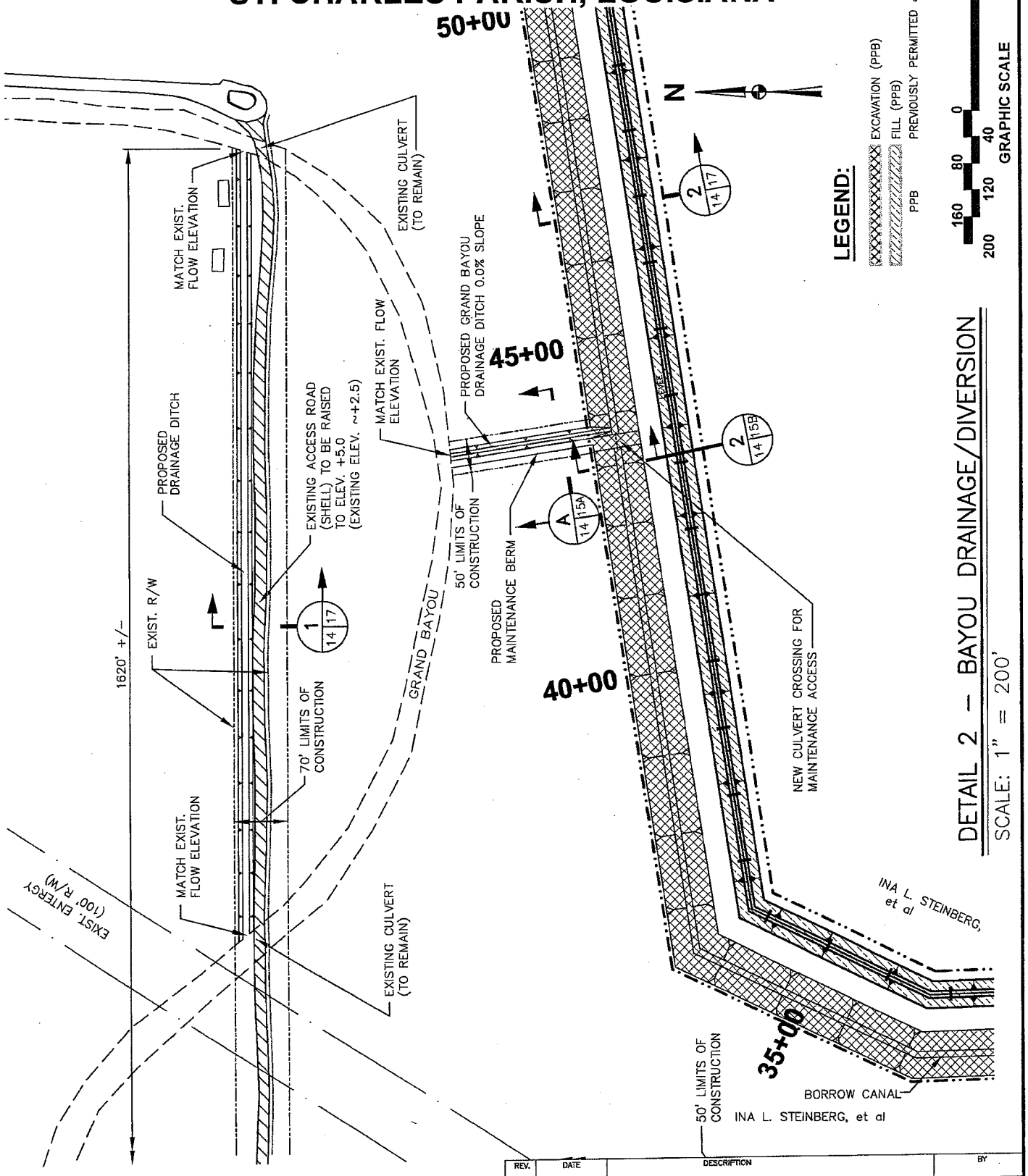

REV.	DATE	DESCRIPTION	BY

PARISH OF ST. CHARLES

APPLICATION BY: PARISH OF ST. CHARLES

SHEET: 14 OF 23 **GRAND BAYOU DRAINAGE DITCH**

BURK-KLEINPETER, INC.
ENGINEERS, ARCHITECTS, PLANNERS, ENVIRONMENTAL SCIENTISTS
4176 CANAL STREET, NEW ORLEANS, LOUISIANA 70119-5994
(504) 486-5901 FAX (504) 488-1714

BKI PROJ. NO. 10475-0100 OCTOBER 2012

PROPOSED HURRICANE PROTECTION LEVEE
MAGNOLIA RIDGE AREA
ST. CHARLES PARISH, LOUISIANA

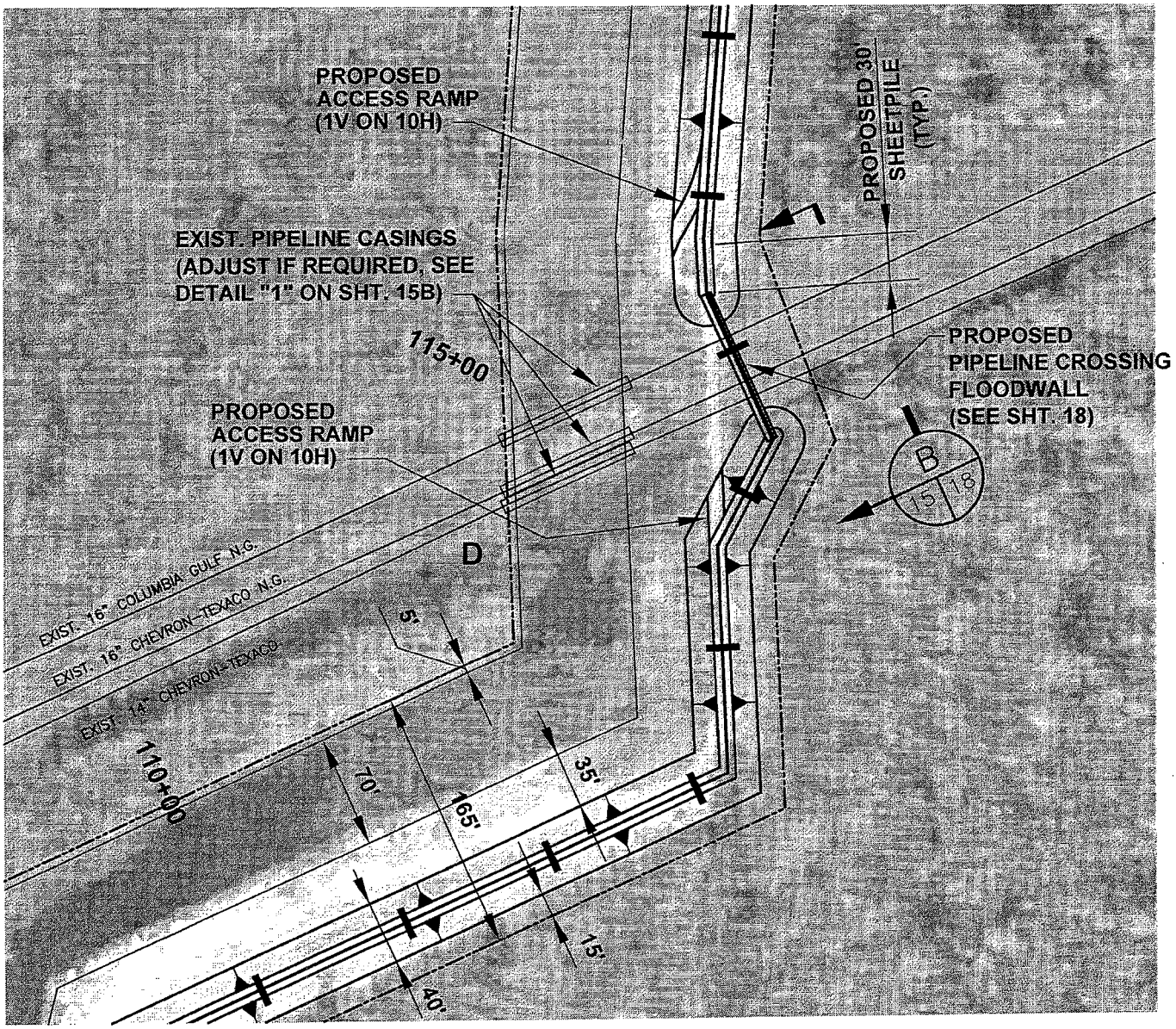

DETAIL 3 – PIPELINE CROSSING PLAN
SCALE: 1" = 100'

SCALE: 1" =100'

80 40 0 100'
100 60 20
GRAPHIC SCALE

REV.	DATE	DESCRIPTION	BY

PARISH OF ST. CHARLES
APPLICATION BY: PARISH OF ST. CHARLES
SHEET: 15 OF 23 PIPELINE CROSSING

BURK-KLEINPETER, INC.
ENGINEERS, ARCHITECTS, PLANNERS, ENVIRONMENTAL SCIENTISTS
4176 CANAL STREET, NEW ORLEANS, LOUISIANA 70119-5994
(504) 486-5901 FAX (504) 488-1714
BKI PROJ. NO. 10475-0100 OCTOBER 2012

PROPOSED HURRICANE PROTECTION LEVEE
MAGNOLIA RIDGE AREA
ST. CHARLES PARISH, LOUISIANA

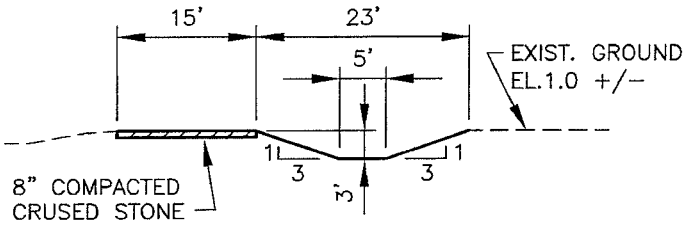

SECTION A
N.T.S. 14 15A

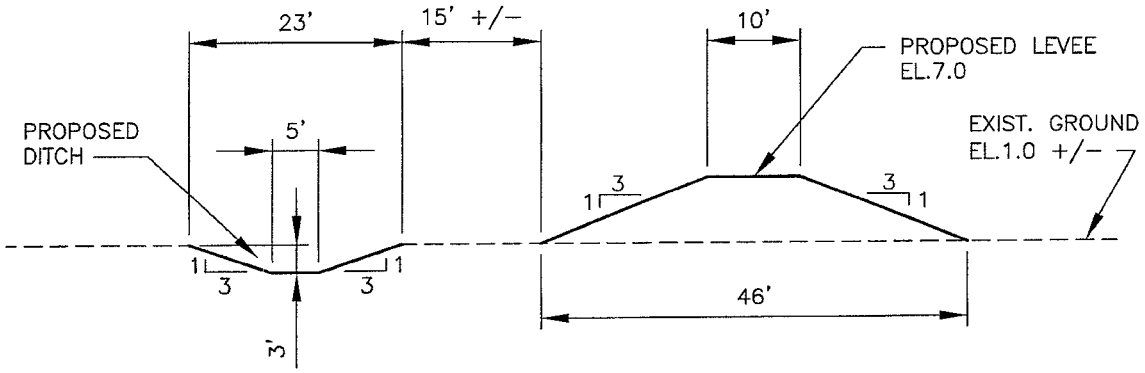

SECTION B
N.T.S. 13 15A

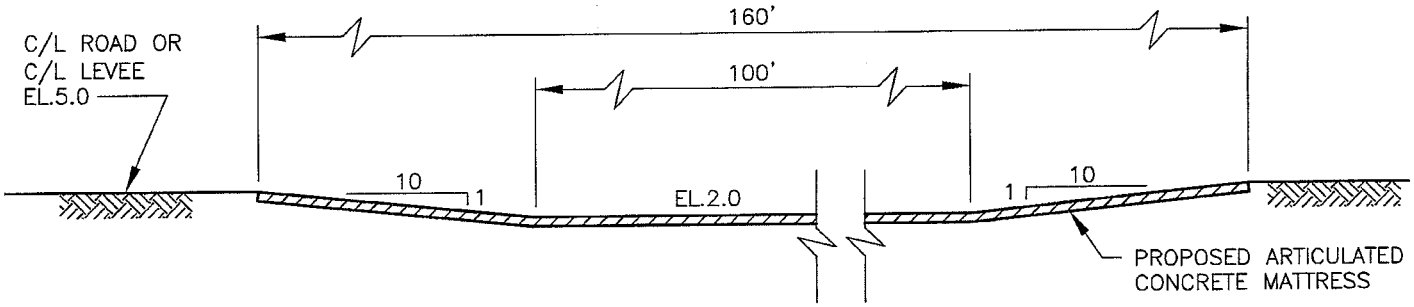

SECTION C
N.T.S. 13 15A

REV.	DATE	DESCRIPTION	BY

PARISH OF ST. CHARLES
APPLICATION BY: PARISH OF ST. CHARLES
SHEET: 15A OF 23 SECTIONS A, B & C

BURK-KLEINPETER, INC.
ENGINEERS, ARCHITECTS, PLANNERS, ENVIRONMENTAL SCIENTISTS
4176 CANAL STREET, NEW ORLEANS, LOUISIANA 70119-5994
(504) 486-5901 FAX (504) 488-1714

BKI PROJ. NO. 10475-0100 OCTOBER 2012

PROPOSED HURRICANE PROTECTION LEVEE
MAGNOLIA RIDGE AREA
ST. CHARLES PARISH, LOUISIANA

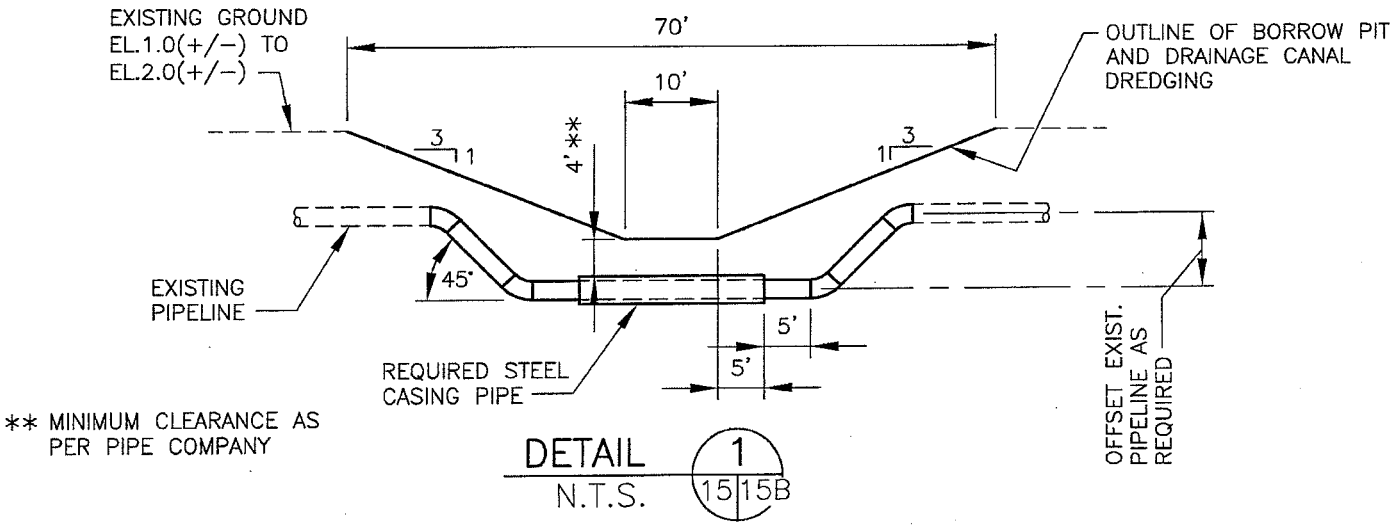

DETAIL 1 (15|15B)
N.T.S.

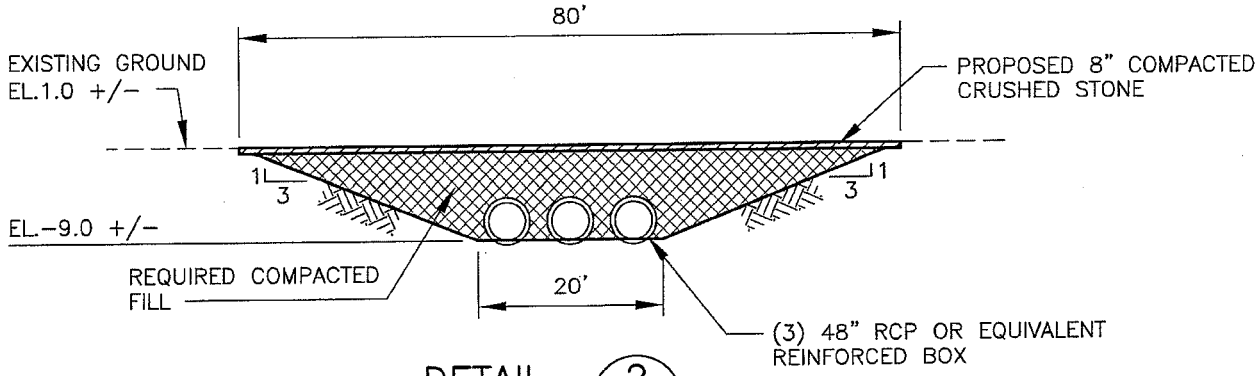

DETAIL 2 (14|15B)
N.T.S.

REV.	DATE	DESCRIPTION	BY

PARISH OF ST. CHARLES
APPLICATION BY: PARISH OF ST. CHARLES
SHEET: 15B OF 23 **DETAILS 1, 2 & 3**

BURK-KLEINPETER, INC.
ENGINEERS, ARCHITECTS, PLANNERS, ENVIRONMENTAL SCIENTISTS
4176 CANAL STREET, NEW ORLEANS, LOUISIANA 70119-5994
(504) 486-5901 FAX (504) 488-1714

BKI PROJ. NO. 10475-0100 OCTOBER 2012

PROPOSED HURRICANE PROTECTION LEVEE
MAGNOLIA RIDGE AREA
ST. CHARLES PARISH, LOUISIANA

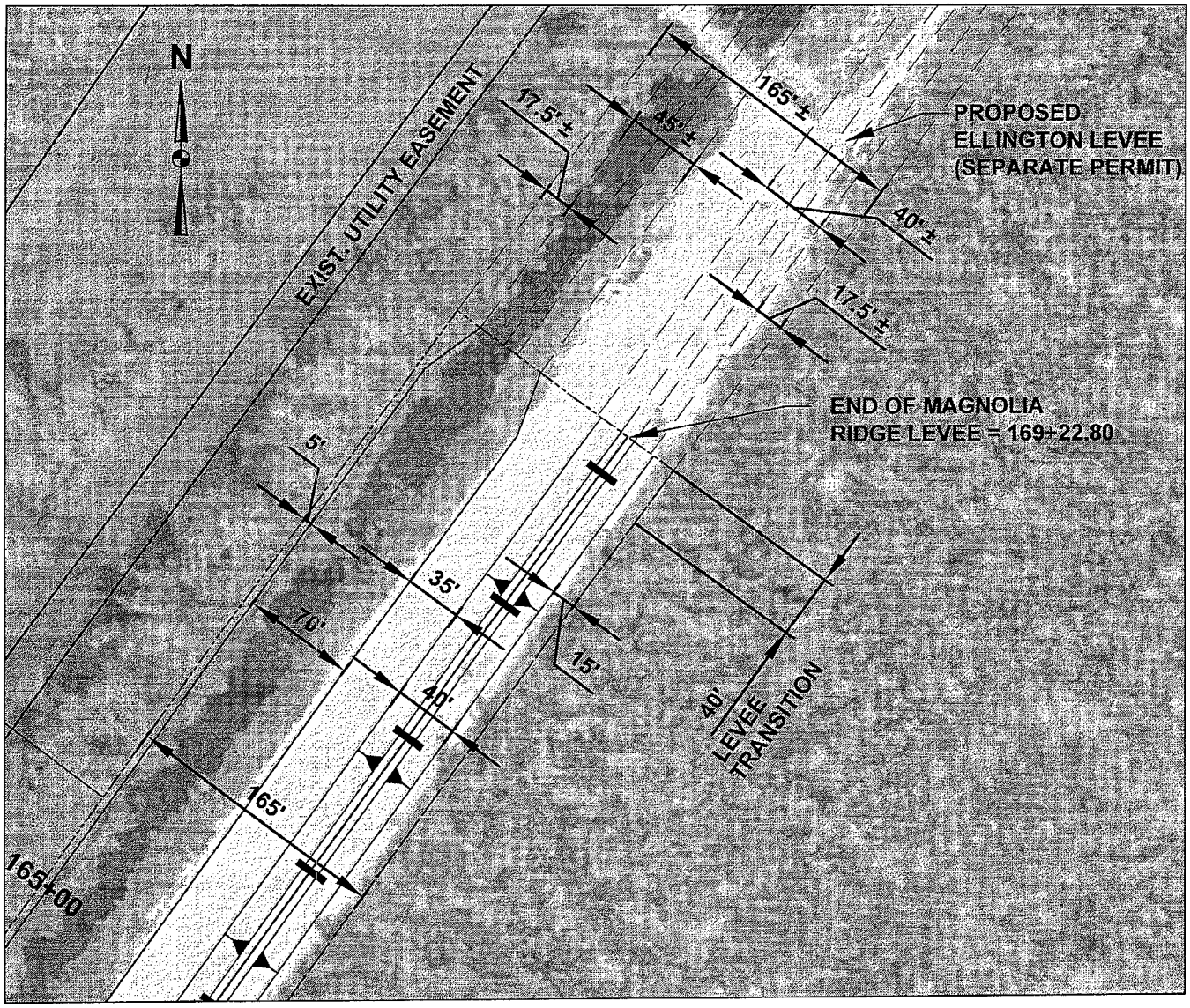

DETAIL 4 – LEVEE TRANSITION

SCALE: 1" = 100'

LEGEND:

LEVEE RIGHT OF WAY

LEVEE BASELINE

SCALE: 1" =100'

80 40 0 100'

100 60 20

GRAPHIC SCALE

PARISH OF ST. CHARLES

APPLICATION BY: PARISH OF ST. CHARLES

SHEET: 16 OF 23 LEVEE TRANSITION

BURK-KLEINPETER, INC.
ENGINEERS, ARCHITECTS, PLANNERS, ENVIRONMENTAL SCIENTISTS
4176 CANAL STREET, NEW ORLEANS, LOUISIANA 70119-5994
(504) 486-5901 FAX (504) 488-1714

BKI PROJ. NO. 10475-0100 OCTOBER 2012

PROPOSED HURRICANE PROTECTION LEVEE
MAGNOLIA RIDGE AREA
ST. CHARLES PARISH, LOUISIANA

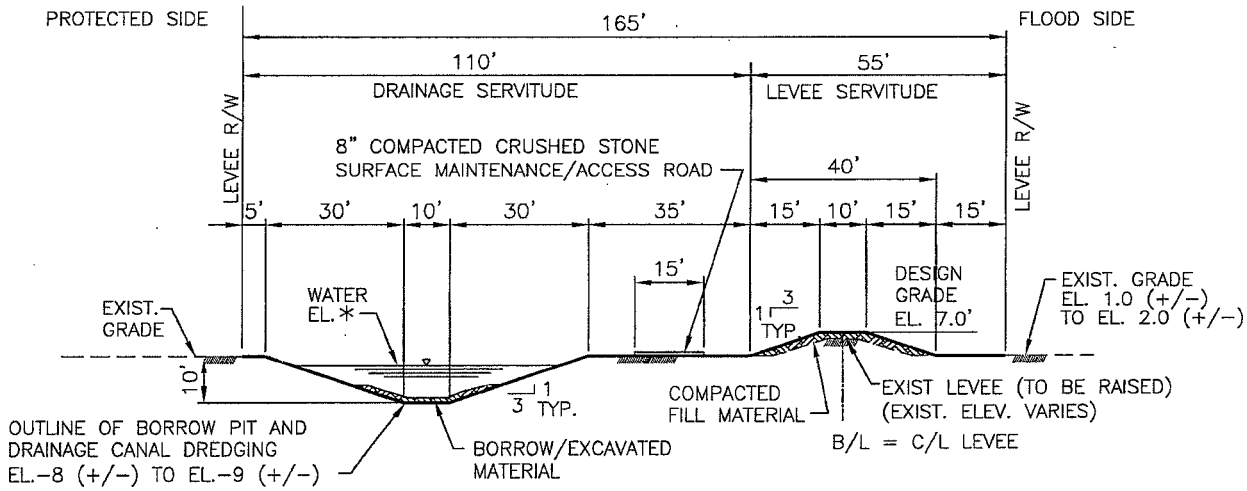

* NORMAL MAINTENANCE LEVEL
+0.25' START
0.0' STOP

+0.25' START
-4.0' STOP (PRE STORM PUMP DESIGN)

SCALE: 1"=40'

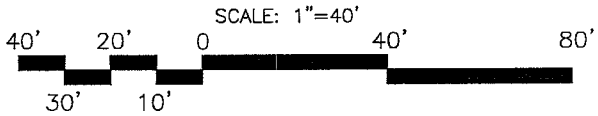

AVG. MONTHLY HIGH 2011 AND LOW TIDE BAYOU GAUCHE JAN. TO JUNE 2012	
HIGH	+0.98'
LOW	-0.62'

LEVEE/CANAL TYPICAL SECTION

1/8|17 1/9|17 1/10|17 1/11|17 1/12|17 1/13|17 2/14|17

LEGEND:

FILL (LEVEE AND EXIST. DITCH)

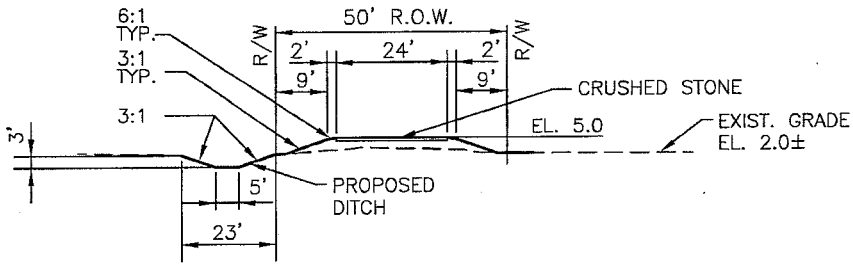

ACCESS ROAD TYPICAL SECTION

1/14|17

SCALE: 1"=40'

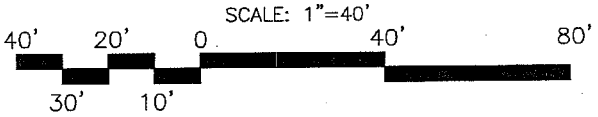

REV.	DATE	DESCRIPTION	BY

PARISH OF ST. CHARLES
APPLICATION BY: PARISH OF ST. CHARLES
SHEET: 17 OF 23 LEVEE/CANAL & ACCESS ROAD TYPICAL SECTION

BURK-KLEINPETER, INC.
ENGINEERS, ARCHITECTS, PLANNERS, ENVIRONMENTAL SCIENTISTS
4176 CANAL STREET, NEW ORLEANS, LOUISIANA 70119-5994
(504) 486-5901 FAX (504) 488-1714

BKI PROJ. NO. 10475-0100 OCTOBER 2012

PROPOSED HURRICANE PROTECTION LEVEE
MAGNOLIA RIDGE AREA
ST. CHARLES PARISH, LOUISIANA

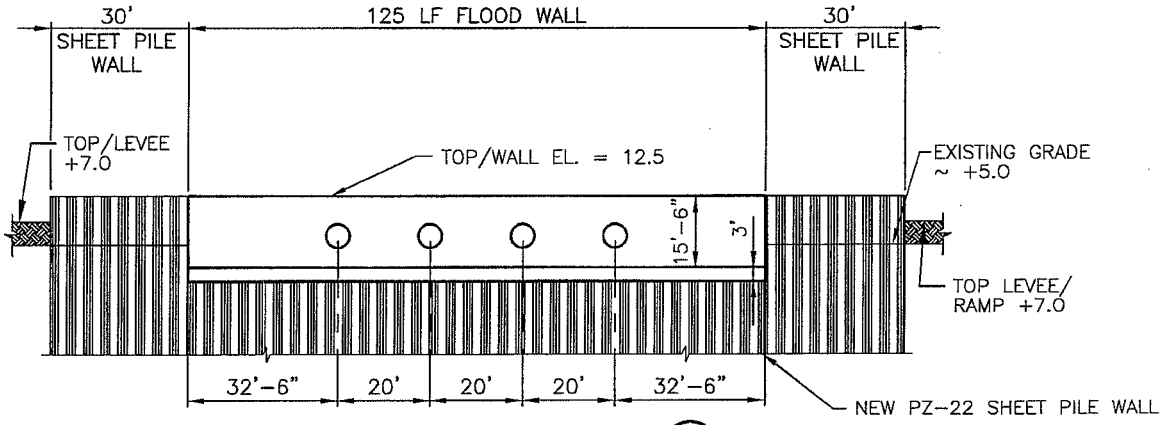

ELEVATION (A 13/18)

T-WALL AT MAGNOLIA RIDGE PUMP STATION

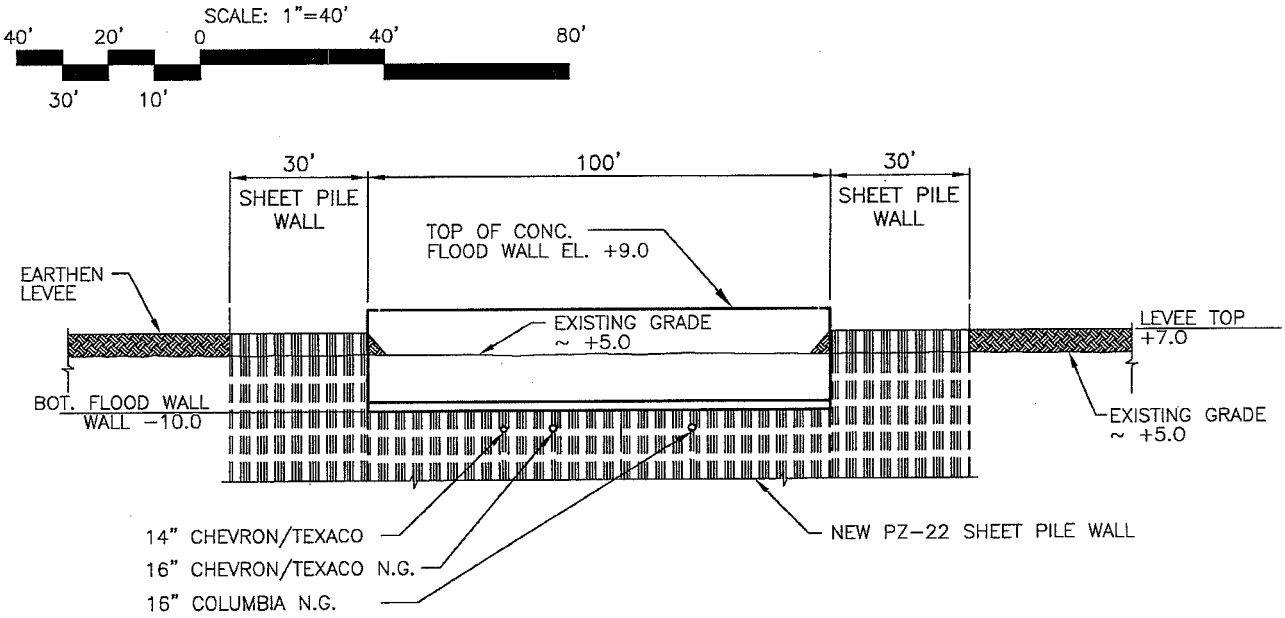

ELEVATION (B 15/18)

FLOOD WALL AT PIPELINE CROSSINGS (TYP.)

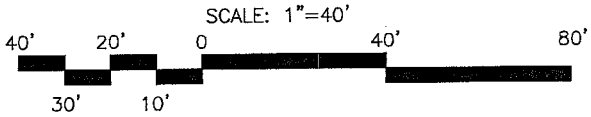

LEGEND:

EARTHEN LEVEE

REV.	DATE	DESCRIPTION	BY

PARISH OF ST. CHARLES
APPLICATION BY: PARISH OF ST. CHARLES
SHEET: 18 OF 23 FLOOD WALL ELEVATIONS "A" & "B"

BURK-KLEINPETER, INC.
ENGINEERS, ARCHITECTS, PLANNERS, ENVIRONMENTAL SCIENTISTS
4176 CANAL STREET, NEW ORLEANS, LOUISIANA 70119-5994
(504) 486-5901 FAX (504) 488-1714

BKI PROJ. NO. 10475-0100 OCTOBER 2012

PROPOSED HURRICANE PROTECTION LEVEE
MAGNOLIA RIDGE AREA
ST. CHARLES PARISH, LOUISIANA

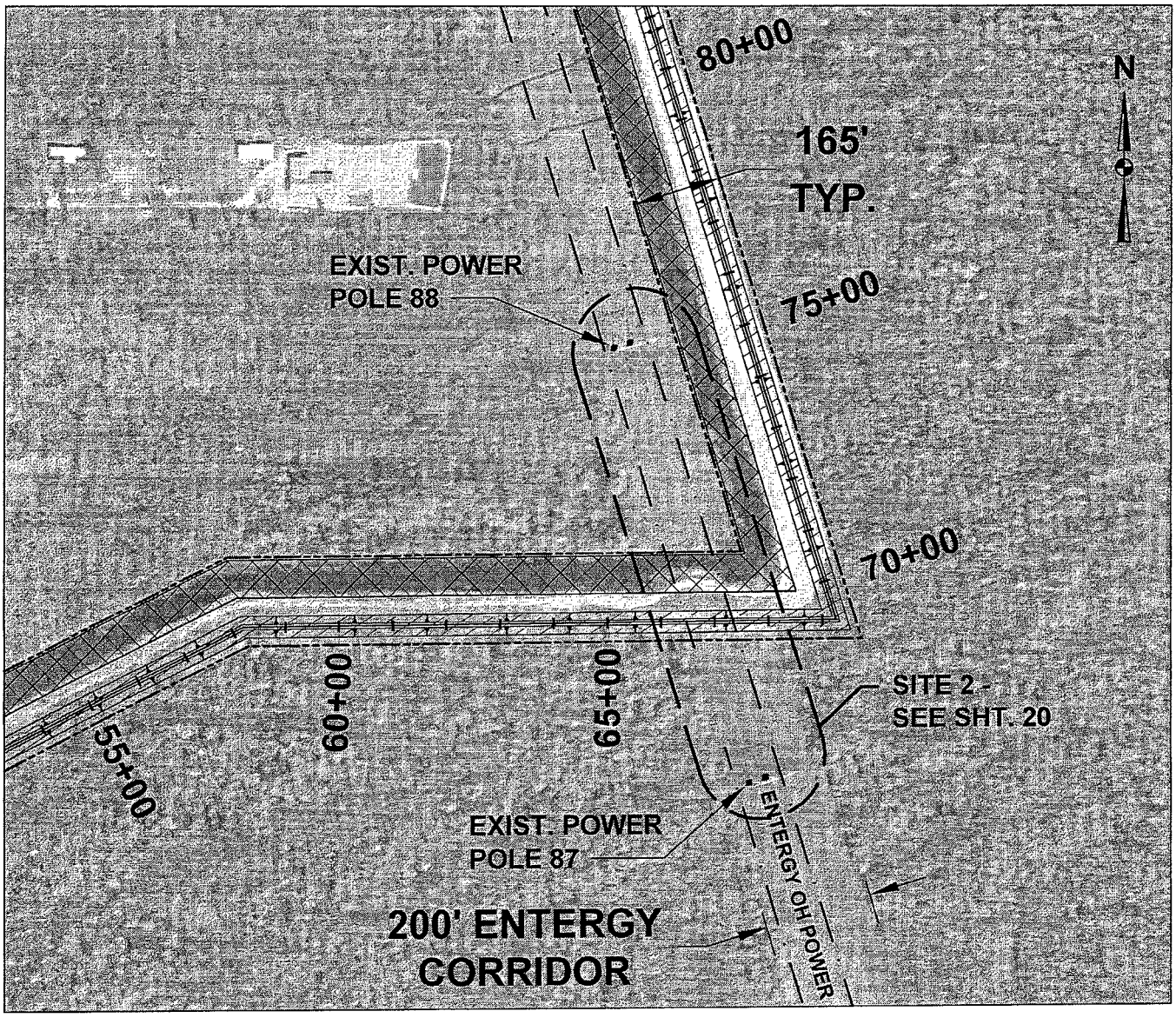

LEGEND:

- LEVEE RIGHT OF WAY
- LEVEE BASELINE
- ENTERGY OVERHEAD POWER
- EXCAVATION (PPB)
- FILL (PPB)
- PPB — PREVIOUSLY PERMITTED & BUILT

SCALE: 1" =300'

200 0 300'

300 100

GRAPHIC SCALE

NOTE:

UTILITY LINES SHOWN ARE APPROXIMATE POSITIONS OF UTILITY EASEMENTS AND ARE NOT MEANT TO INDICATE ACTUAL OWNERSHIP OR POSITION OF PIPELINE OR POWERLINES.

PARISH OF ST. CHARLES

APPLICATION BY: PARISH OF ST. CHARLES

SHEET: 19 OF 23 TRANSMISSION LINE CROSSING PLAN

BURK-KLEINPETER, INC.
ENGINEERS, ARCHITECTS, PLANNERS, ENVIRONMENTAL SCIENTISTS
4176 CANAL STREET, NEW ORLEANS, LOUISIANA 70119-5994
(504) 486-5901 FAX (504) 488-1714

BKI PROJ. NO. 10475-0100 OCTOBER 2012

PROPOSED HURRICANE PROTECTION LEVEE
MAGNOLIA RIDGE AREA
ST. CHARLES PARISH, LOUISIANA
TRANSMISSION LINE CROSSINGS

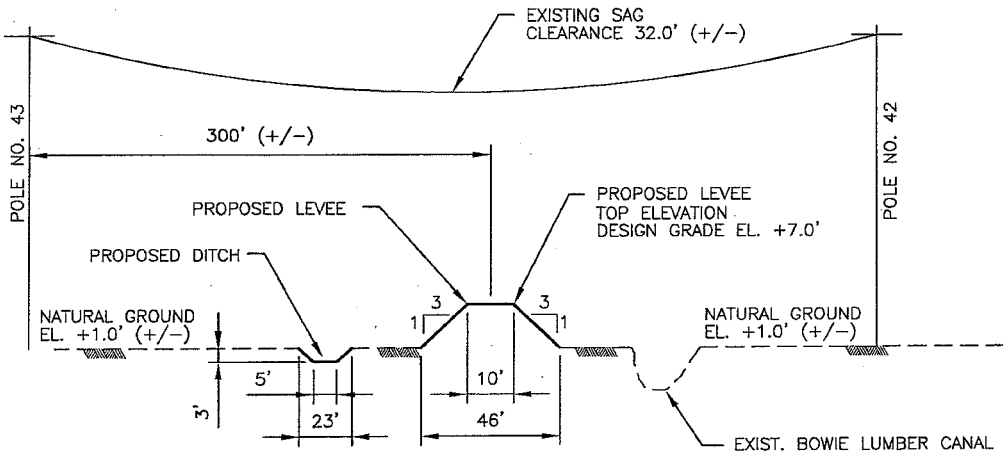

SITE 1

SEE SHEET 13

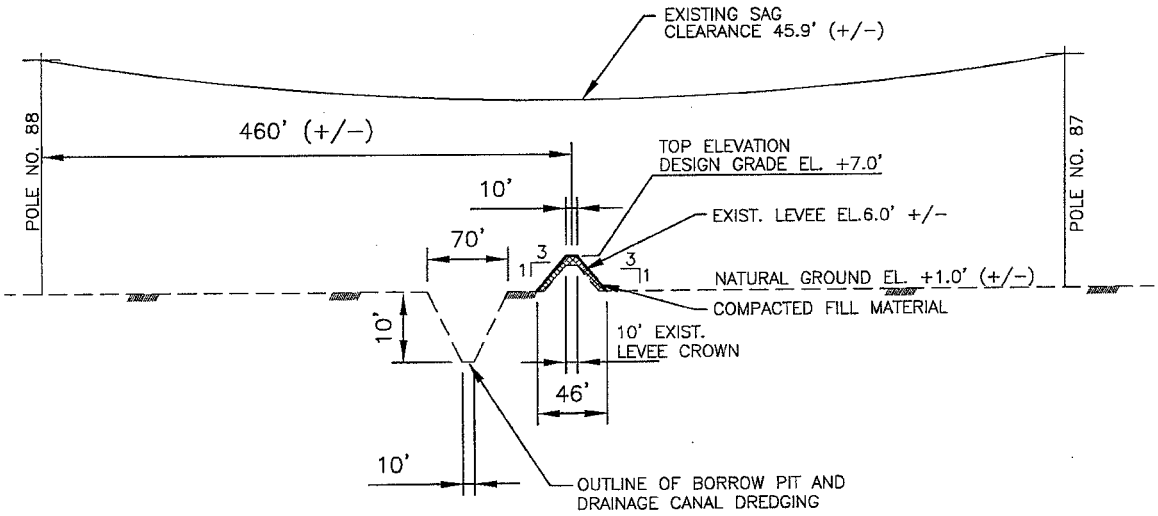

SITE 2

SEE SHEET 19

TRANSMISSION LINE CROSSINGS

SCALE: NTS

REV.	DATE	DESCRIPTION	BY
X	X	X	H.V.H.

PARISH OF ST. CHARLES

APPLICATION BY: PARISH OF ST. CHARLES

SHEET: 20 OF 23 TRANSMISSION LINE CROSSINGS SECTION

BURK-KLEINPETER, INC.
ENGINEERS, ARCHITECTS, PLANNERS, ENVIRONMENTAL SCIENTISTS
4176 CANAL STREET, NEW ORLEANS, LOUISIANA 70119-5994
(504) 486-5901 FAX (504) 488-1714

BKI PROJ. NO. 10475-0100 OCTOBER 2012

PROPOSED HURRICANE PROTECTION LEVEE
MAGNOLIA RIDGE AREA
ST. CHARLES PARISH, LOUISIANA

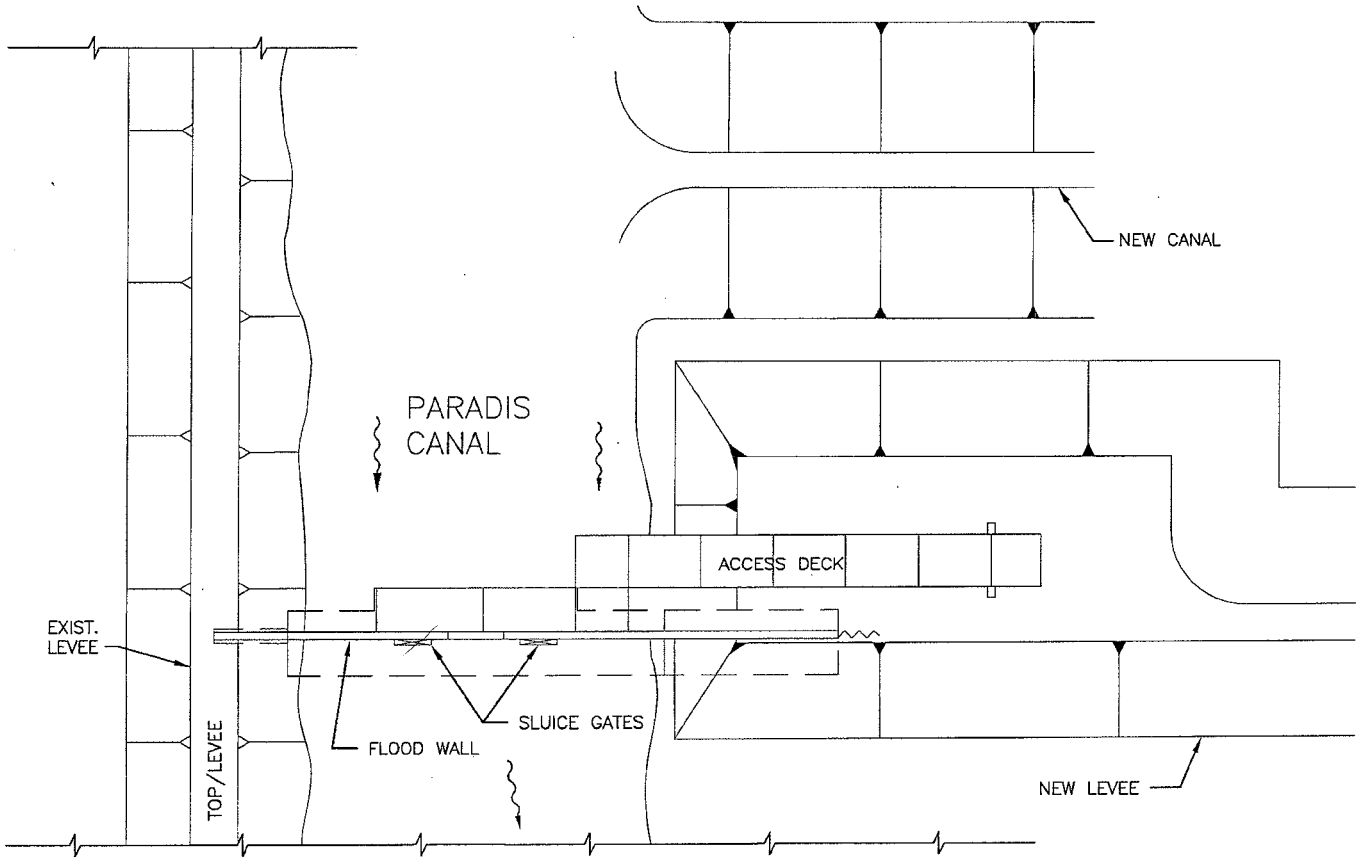

CLOSURE STRUCTURE PLAN (PPNB)

SCALE: 1" = 50'

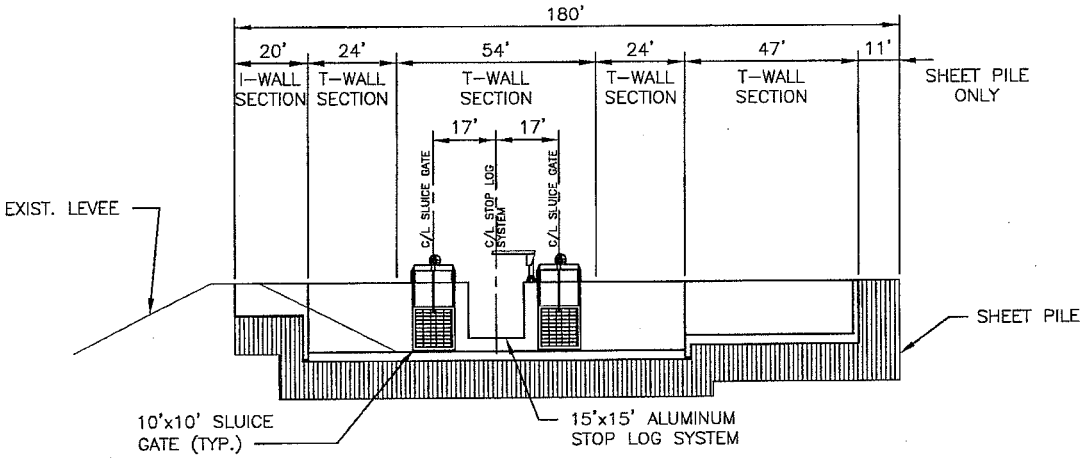

CLOSURE STRUCTURE ELEVATION (PPNB)

SCALE: 1" = 50'

SCALE: 1" =50'

40 20 0 50'

50 30 10

GRAPHIC SCALE

PPNB = PREVIOUSLY PERMITTED & NOT BUILT

REV.	DATE	DESCRIPTION	BY
X	X	X	H.V.H.

PARISH OF ST. CHARLES

APPLICATION BY: PARISH OF ST. CHARLES

SHEET: 21 OF 23 PARADIS CANAL CLOSURE STRUCTURE

BURK-KLEINPETER, INC.
ENGINEERS, ARCHITECTS, PLANNERS, ENVIRONMENTAL SCIENTISTS
4176 CANAL STREET, NEW ORLEANS, LOUISIANA 70119-5994
(504) 486-5901 FAX (504) 488-1714

BKI PROJ. NO. 10475-0100 OCTOBER 2012

PROPOSED HURRICANE PROTECTION LEVEE
MAGNOLIA RIDGE AREA
ST. CHARLES PARISH, LOUISIANA

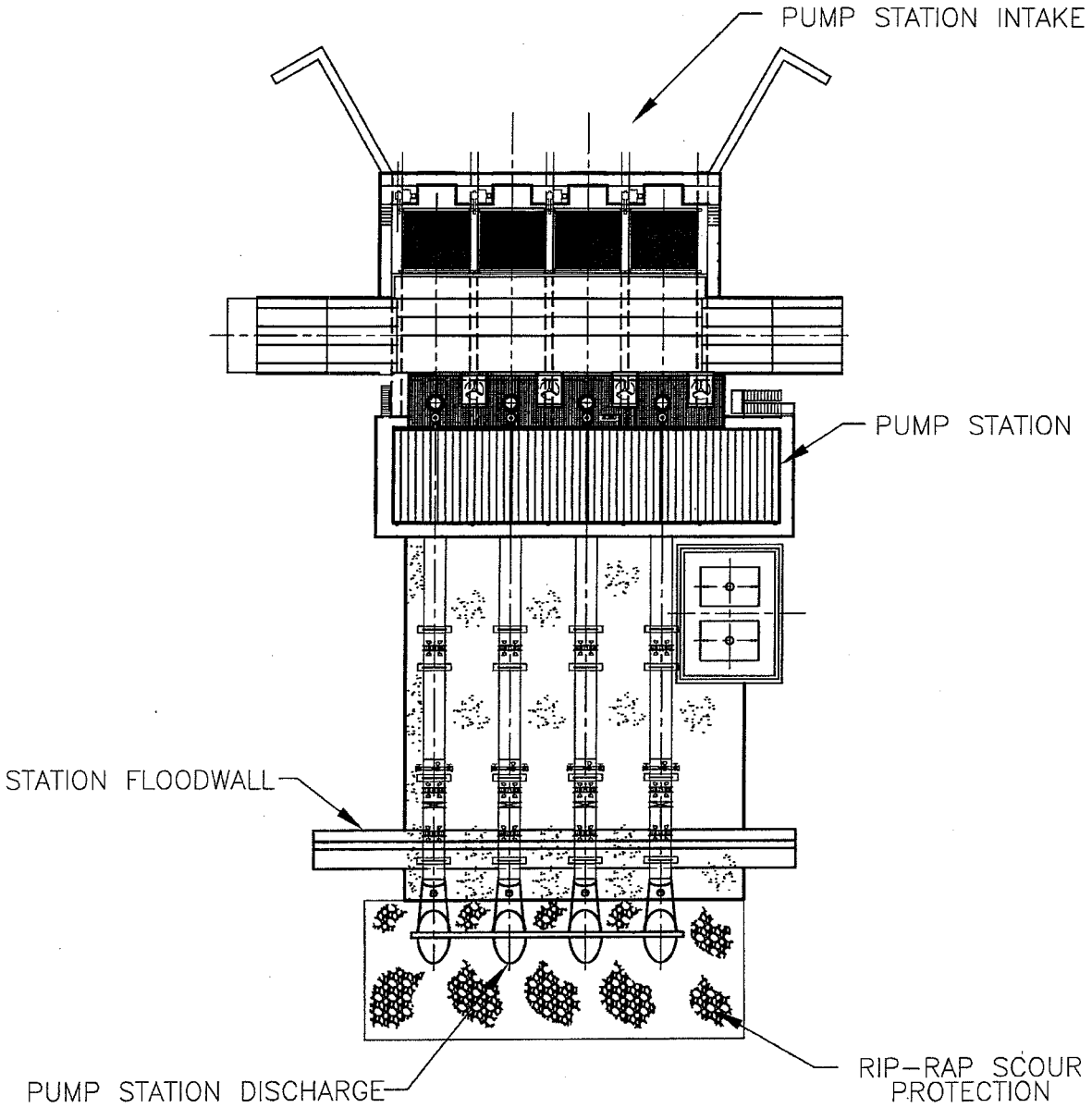

MAGNOLIA RIDGE PUMPING STATION PLAN (PPNB)

SCALE: 1"=30'

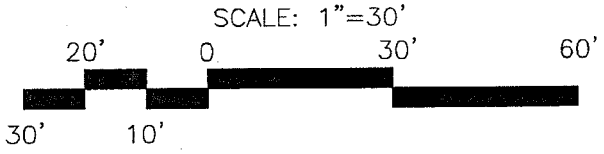

PPNB = PREVIOUSLY PERMITTED & NOT BUILT

REV.	DATE	DESCRIPTION	BY
X	X	X	H.V.H.

PARISH OF ST. CHARLES
APPLICATION BY: PARISH OF ST. CHARLES
SHEET: 22 OF 23 MAGNOLIA RIDGE PUMPING STATION PLAN

BURK-KLEINPETER, INC.
ENGINEERS, ARCHITECTS, PLANNERS, ENVIRONMENTAL SCIENTISTS
4176 CANAL STREET, NEW ORLEANS, LOUISIANA 70119-5994
(504) 486-5901 FAX (504) 488-1714

BKI PROJ. NO. 10475-0100 OCTOBER 2012

PROPOSED HURRICANE PROTECTION LEVEE
MAGNOLIA RIDGE AREA
ST. CHARLES PARISH, LOUISIANA

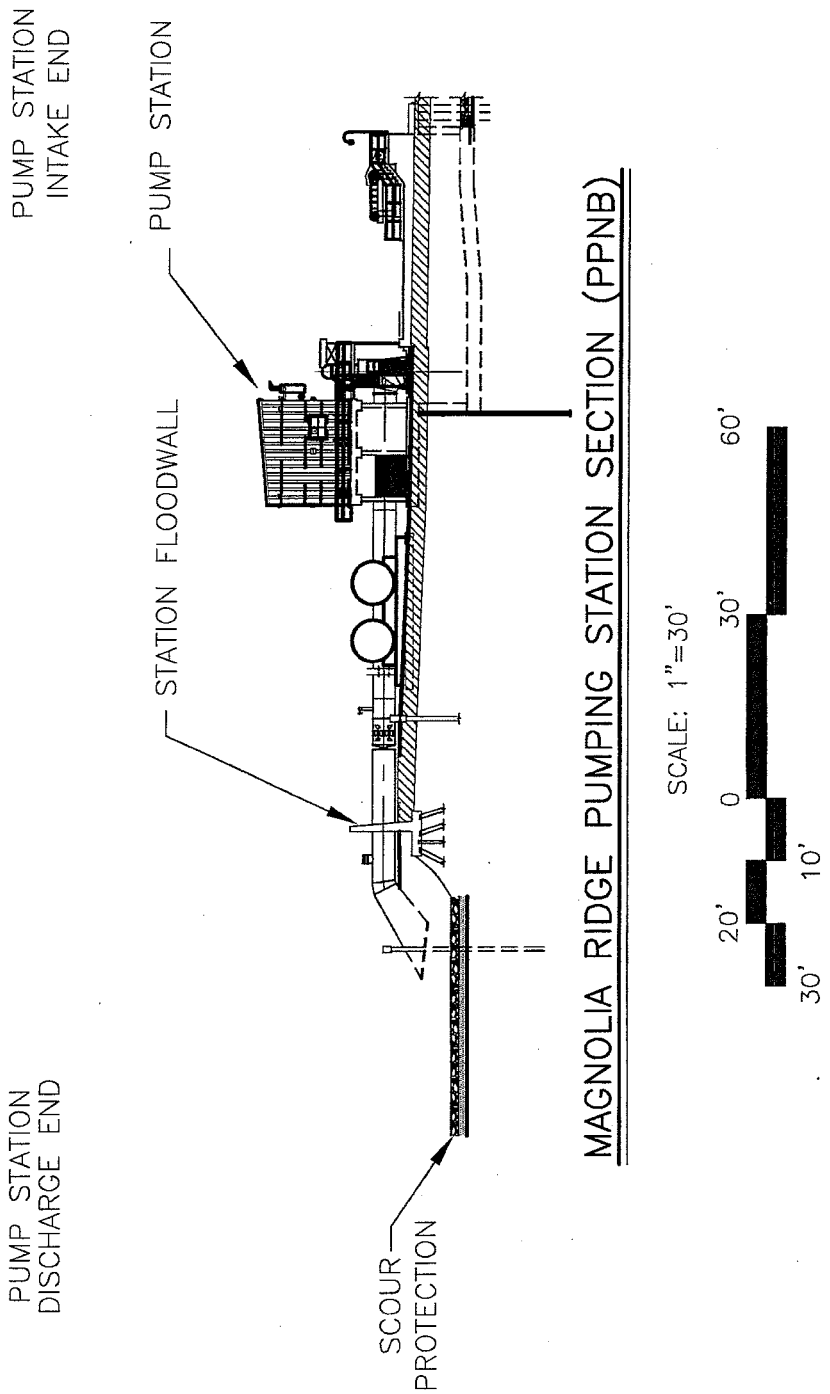

PPNB = PREVIOUSLY PERMITTED & NOT BUILT

REV.	DATE	DESCRIPTION	BY
X	X	X	H.V.H.

PARISH OF ST. CHARLES
APPLICATION BY: PARISH OF ST. CHARLES
SHEET: 23 OF 23 **MAGNOLIA RIDGE PUMPING STATION SECTION**

BURK-KLEINPETER, INC.
ENGINEERS, ARCHITECTS, PLANNERS, ENVIRONMENTAL SCIENTISTS
4176 CANAL STREET, NEW ORLEANS, LOUISIANA 70119-5994
(504) 486-5901 FAX (504) 488-1714

BKI PROJ. NO. 10475-0100 OCTOBER 2012