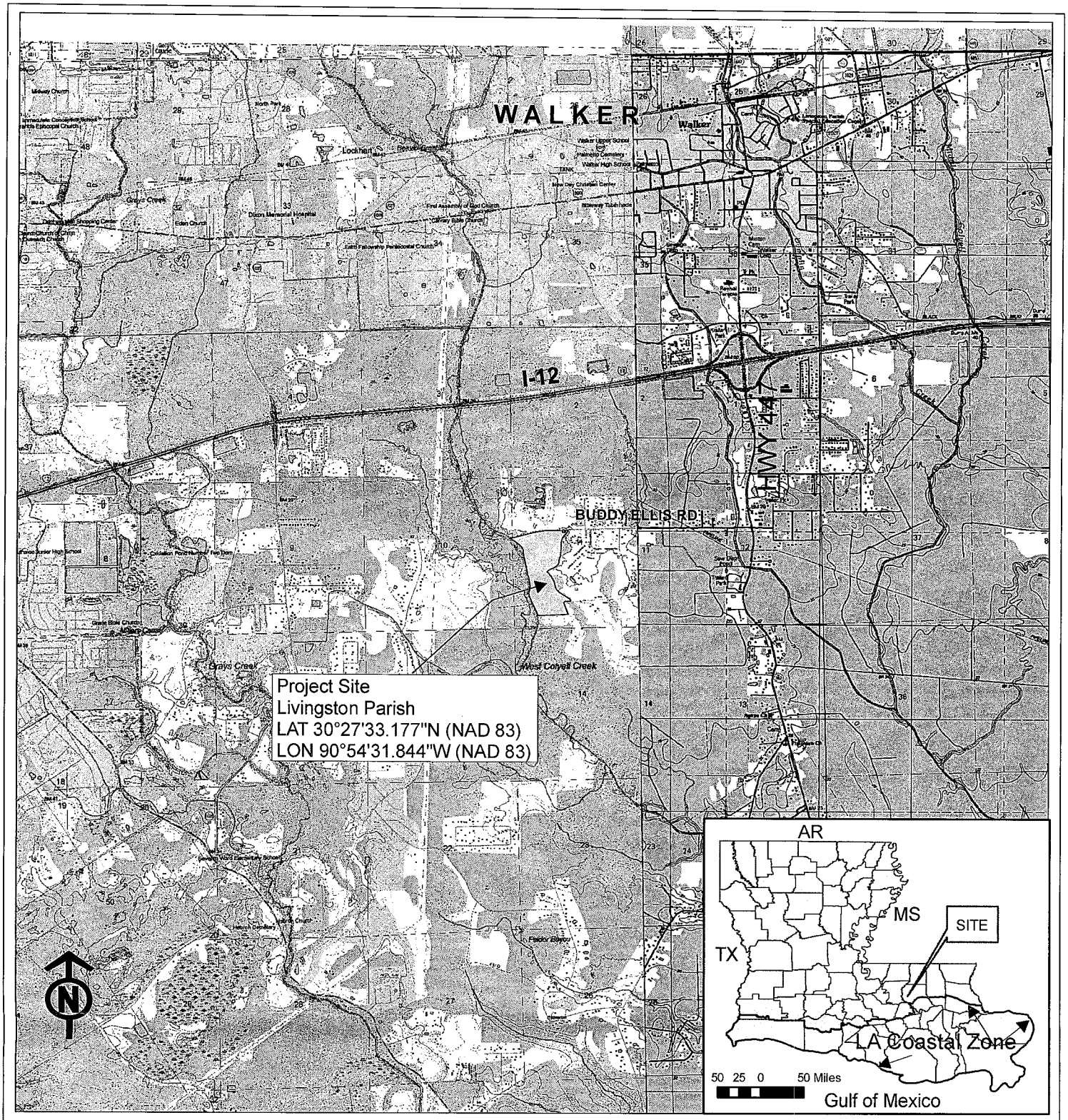

5,300 2,650 0 5,300 Feet

Bosso-Imhof Environmental Sciences Inc.
1300 West Government Street
Pensacola, Florida 32502
850-434-1935

Evangeline Trace Subdivision
Dredge And Fill Application
Sections 10 & 11, T7S-R3E
Locator Map
Livingston Parish
July 31, 2012

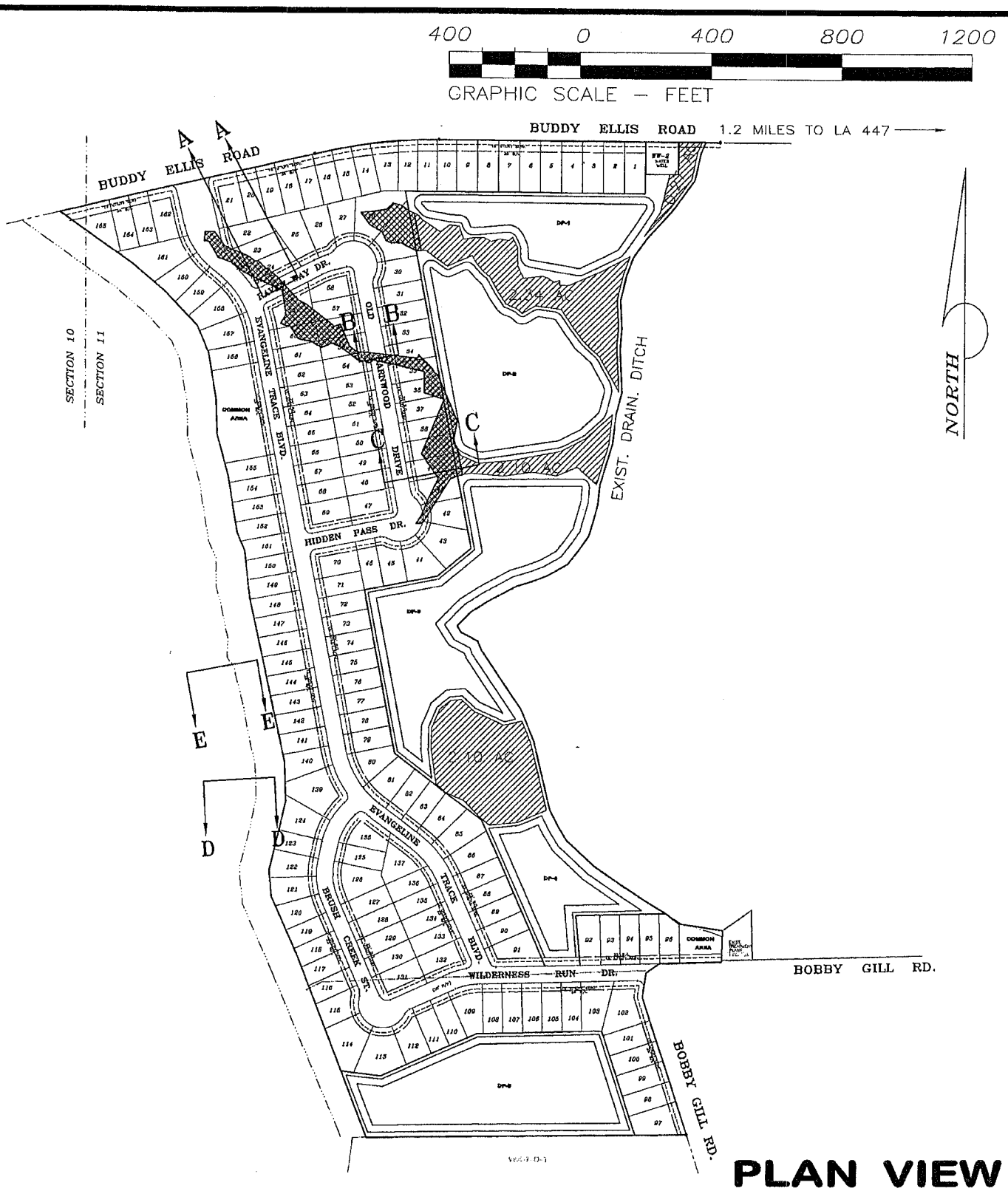

PLAN VIEW

TOTAL AVOIDED WETLANDS: 6.81 Acres

OTHER WATERS: To Be Temp. Impacted 1.77 Acres
(19,000 cubic yards cut from side slopes)

IMPACTED WETLANDS (Fill Area): 1.75 Acres
(8400 cubic yards of fill)

FIRST HORIZON, INC.
LOCATED IN SECTIONS 10 & 11, T7S-R3E
GREENSBURG LAND DISTRICT
LIVINGSTON PARISH, LOUISIANA

DATE: 7/31/12

X:\LP-12\212D106_EVANGELINE TRACE WETLAND\DWG\212D106_WET PLANVIEW_REV.DWG OCT-25-2012 RAYMOND

Rcvd 10/24/12

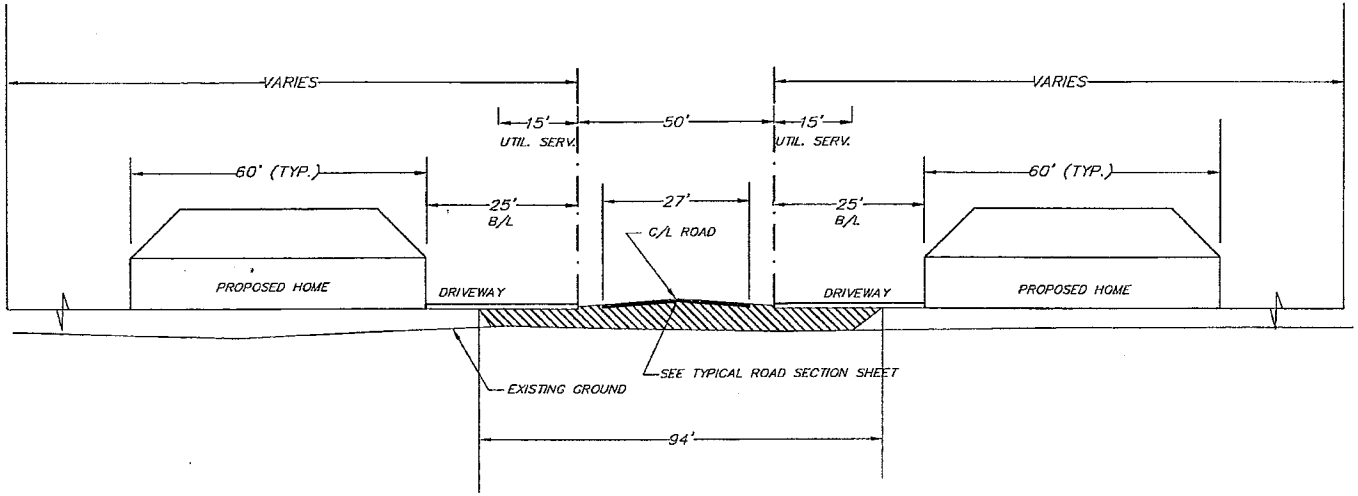

PROPOSED TYPICAL SECTION
SECTION "B–B"

N. T. S.

McLin & Associates, Inc.
Engineering and Land Surveying
27343 FROST ROAD LIVINGSTON, LA. 70754 (225)686-1444

Road 10/24/12

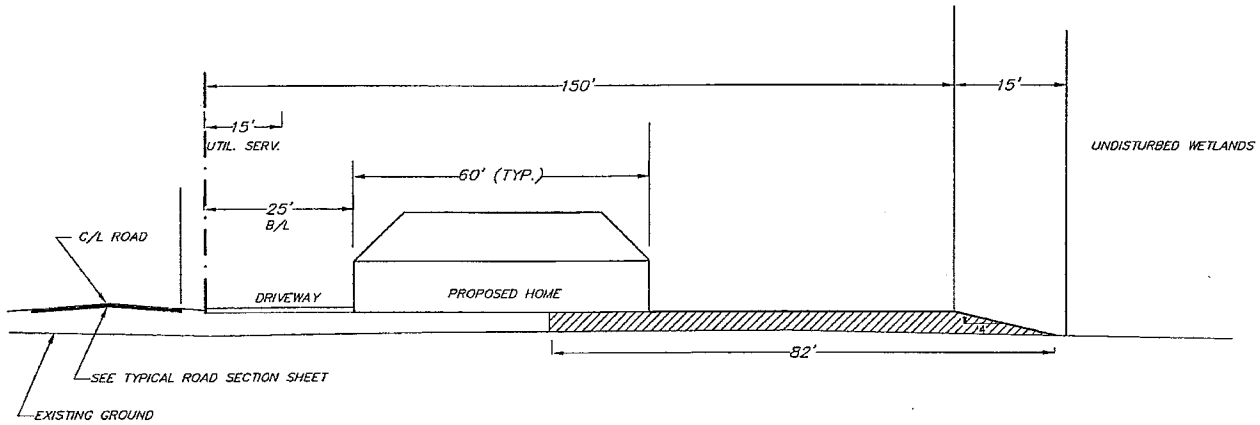

PROPOSED TYPICAL SECTION
SECTION "C–C"

N. T. S.

– Fill in USACE wetlands varies from 2' to 3' deep

Rev'd 10/24/12

McLin & Associates, Inc.
Engineering and Land Surveying
27343 FROST ROAD LIVINGSTON, LA. 70754 (225)686-1444

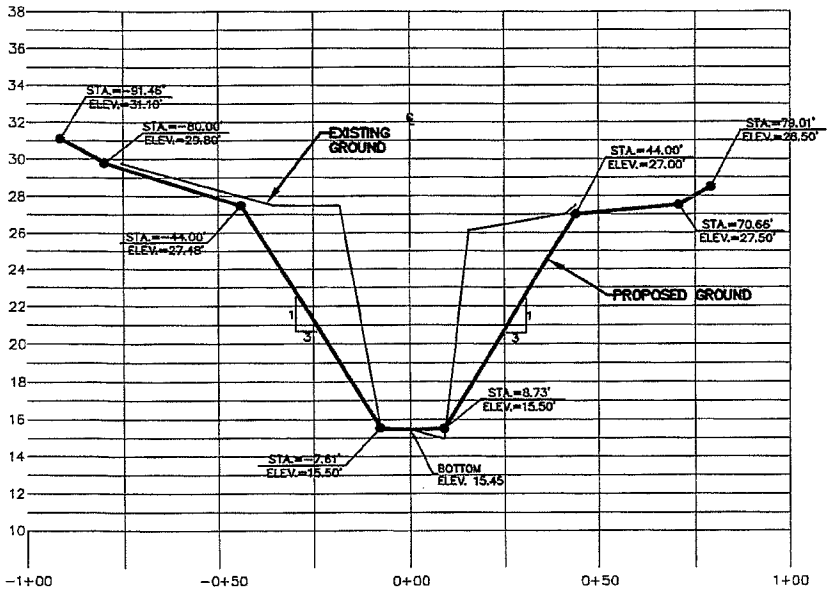

SECTION D–D

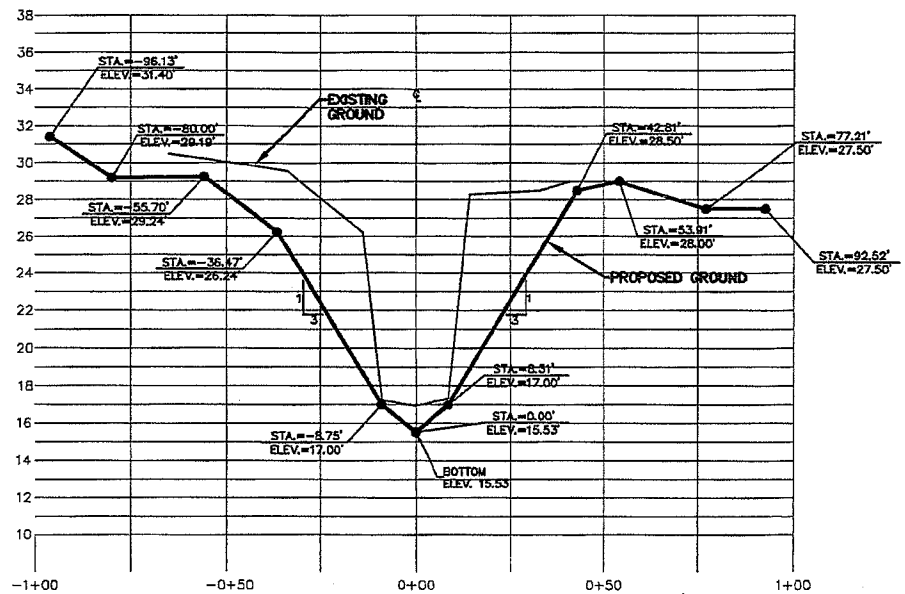

SECTION E–E

NOTE:

CREEK SIDE SLOPES SHALL BE STABILIZED BY COVERING SEED AND FERTILIZER WITH EROSION CONTROL BLANKETS (ECB) AND ANY OTHER ACCEPTABLE METHOD TO ACCOMPLISH STABILIZATION. CONTRACTOR SHALL SUBMIT SHOP DRAWINGS AND SPECIFICATIONS OF THE SPECIFIC ECB THAT IS USED. THE ECB SHALL BE INSTALLED IN ACCORDANCE WITH MANUFACTURER'S SPECIFICATIONS. THE CONTRACTOR WILL BE RESPONSIBLE FOR THE ESTABLISHMENT OF VEGETATION ACCEPTABLE TO THE PARISH BEFORE THE 18 MONTH MAINTENANCE PERIOD ENDS.

McLin & Associates, Inc.
Engineering and Land Surveying
27343 FROST ROAD LIVINGSTON, LA. 70754 (225)686-1444