FIGURE 1. PROJECT LOCATION

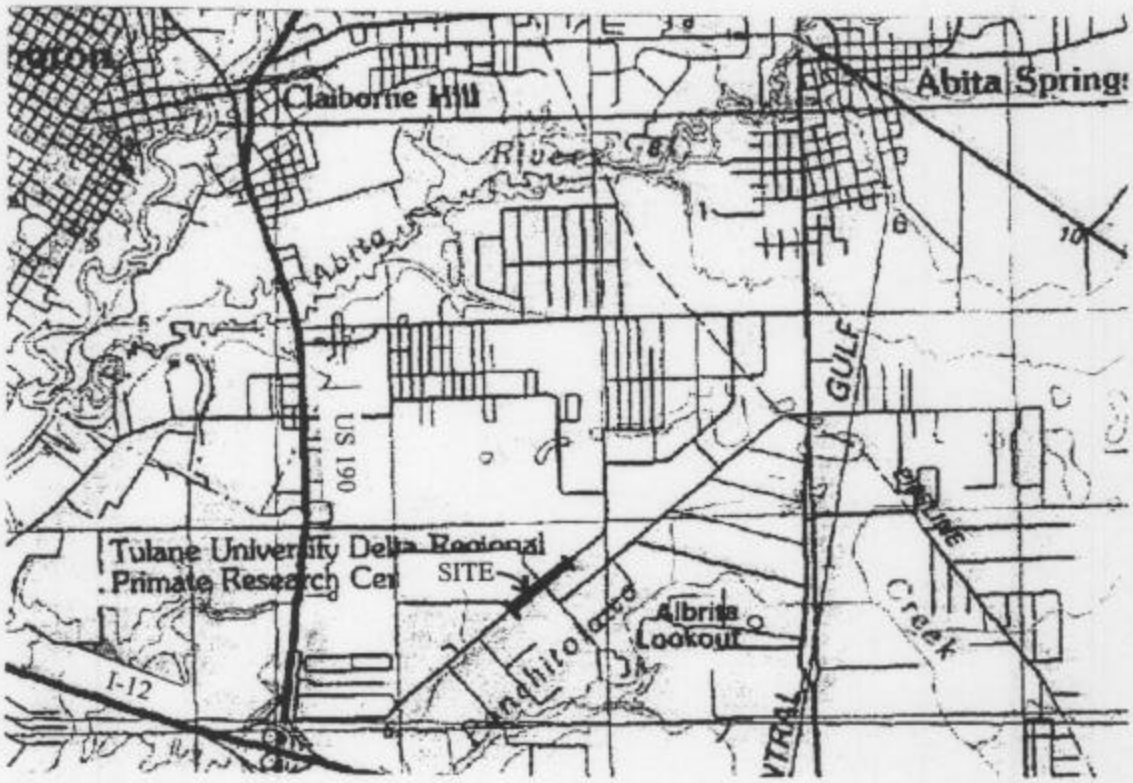

FIGURE 2. ANGELIC ESTATES SUBDIVISION

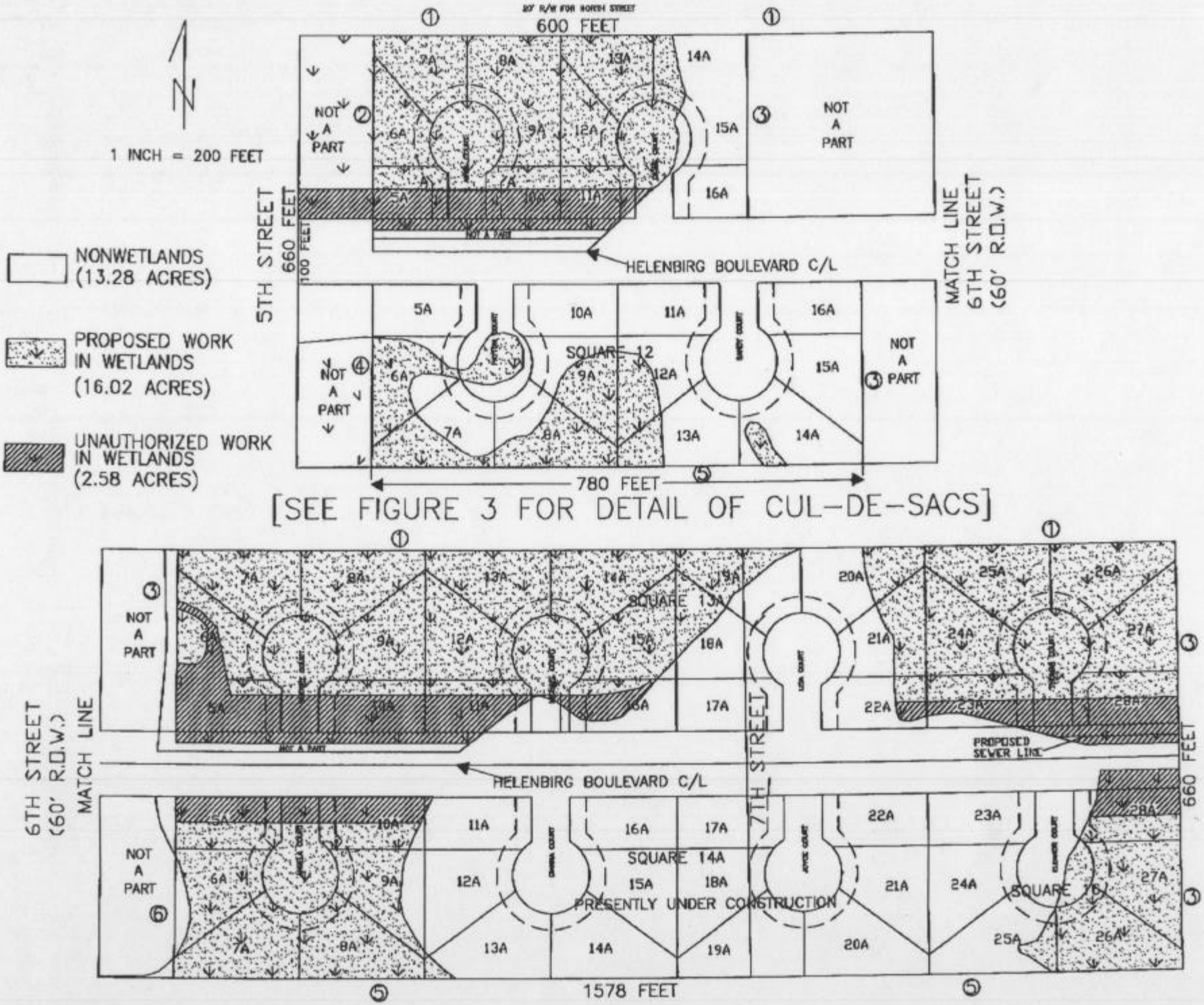

FROM : DRSANDERS FAX NO. : 2285881284 Oct. 23 2003 02:47AM P2

FIGURE 3. CUL-DE-SAC DETAILS.

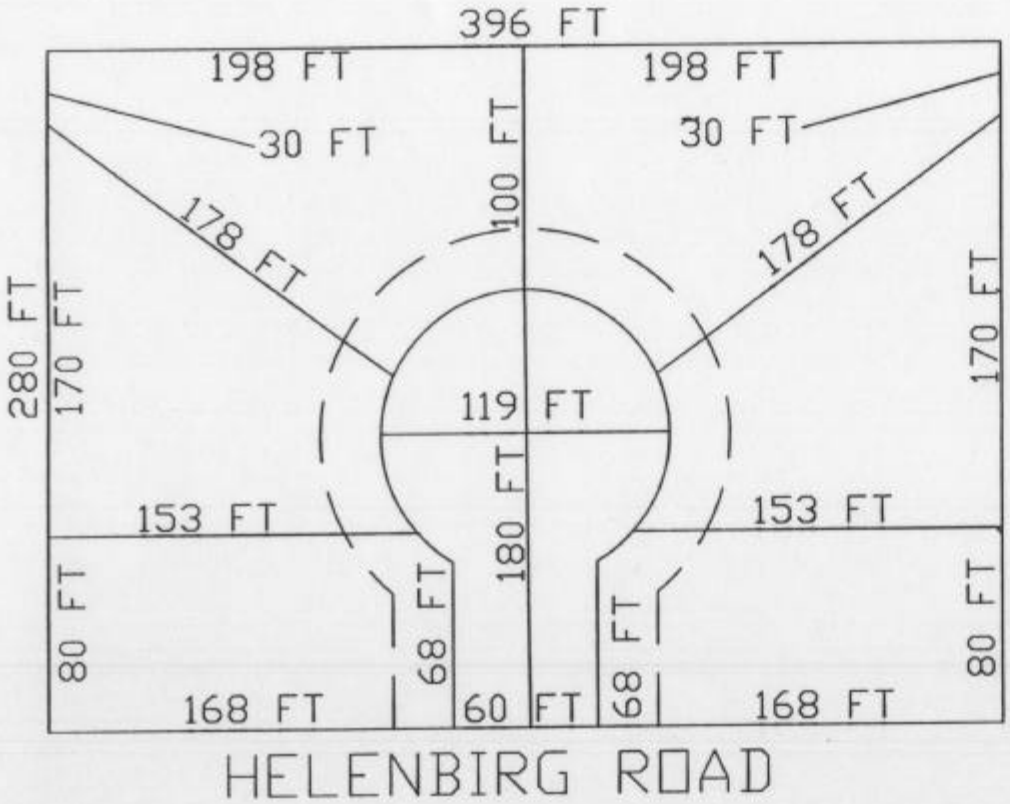

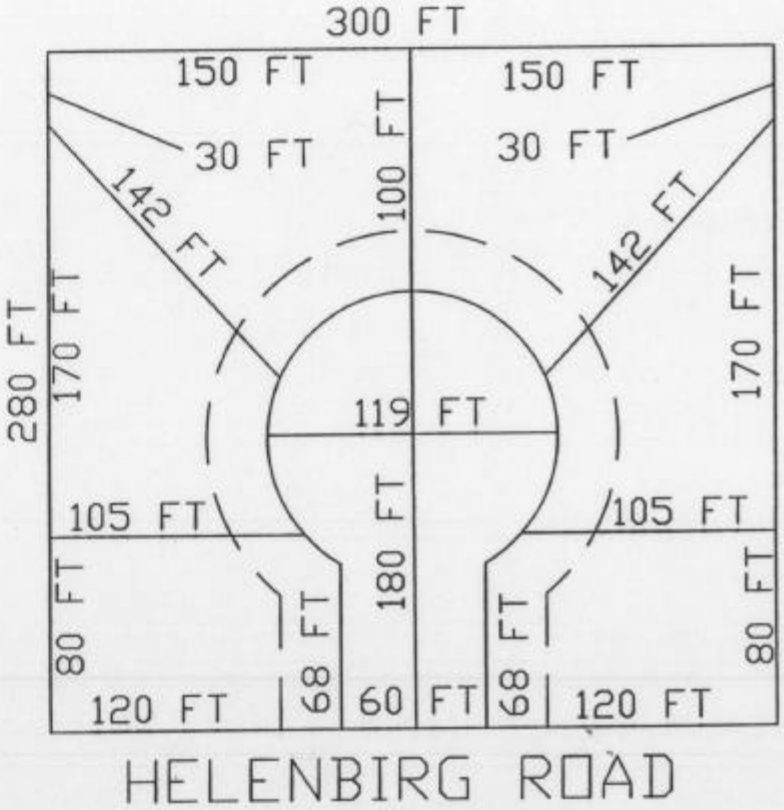

FIGURE 4. TYPICAL ASPHALTIC STREET SECTION A–A'
ANGELIC SUBDIVISION, HELENBIRG ROAD
COVINGTON, LA (IN WETLANDS)

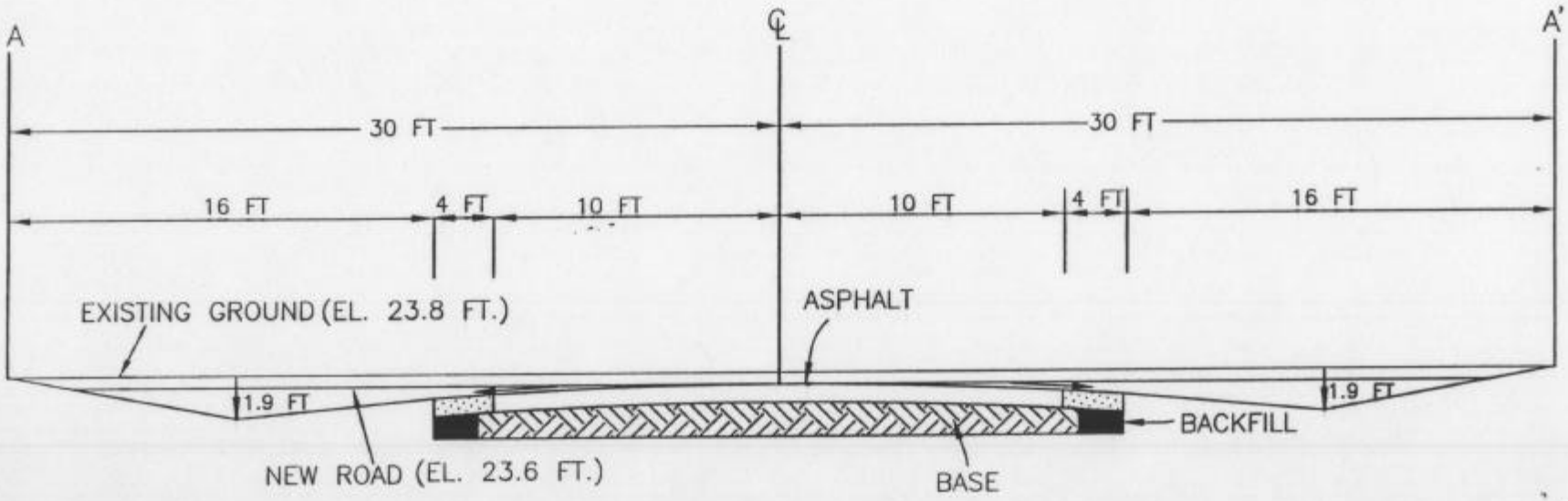

FIGURE 5. TYPICAL PLAN VIEW OF LOT

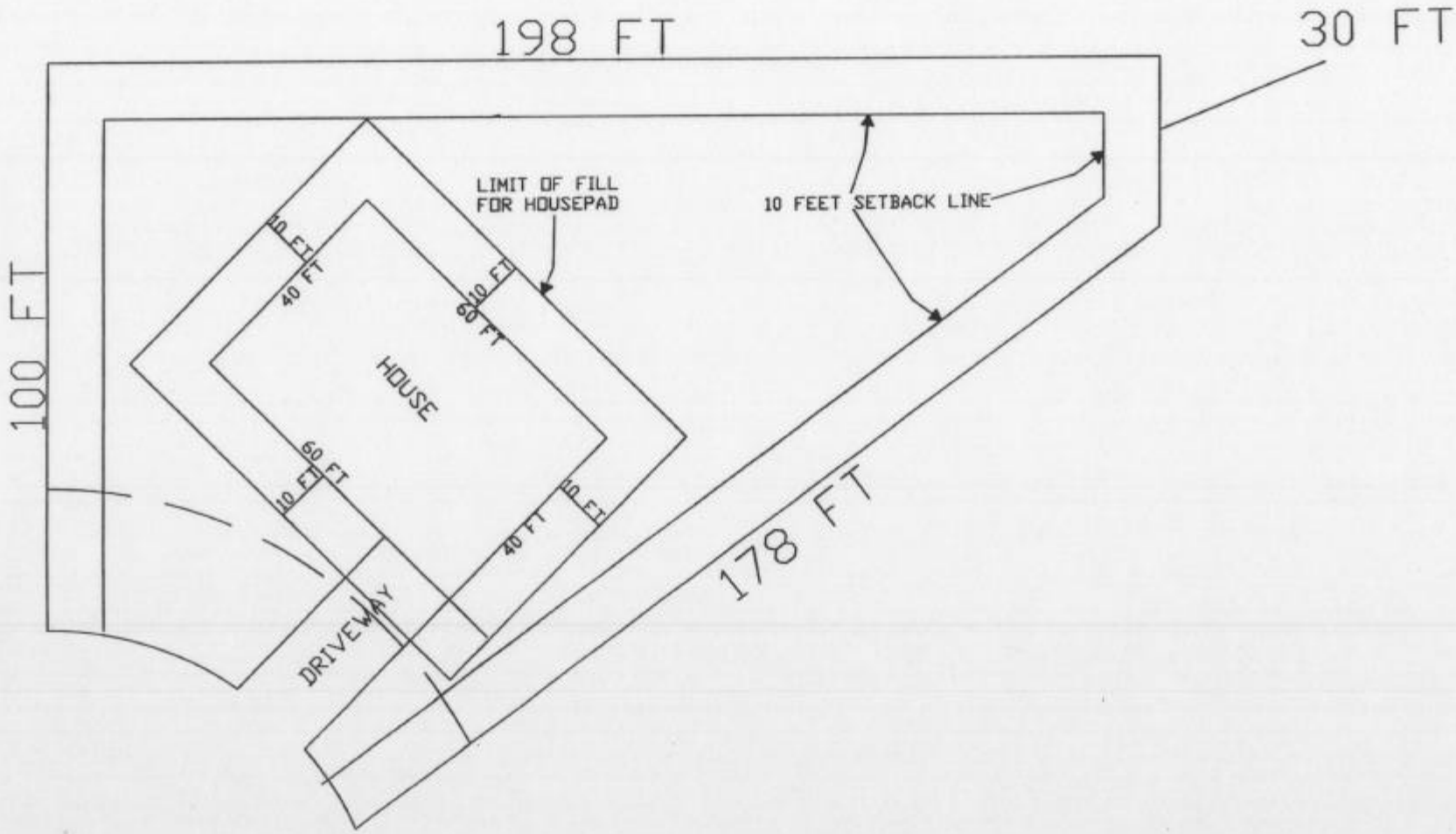

FIGURE 6. TYPICAL CROSS-SECTION OF HOUSE PAD IN WETLANDS
ANGELIC SUBDIVISION, COVINGTON, LOUISIANA

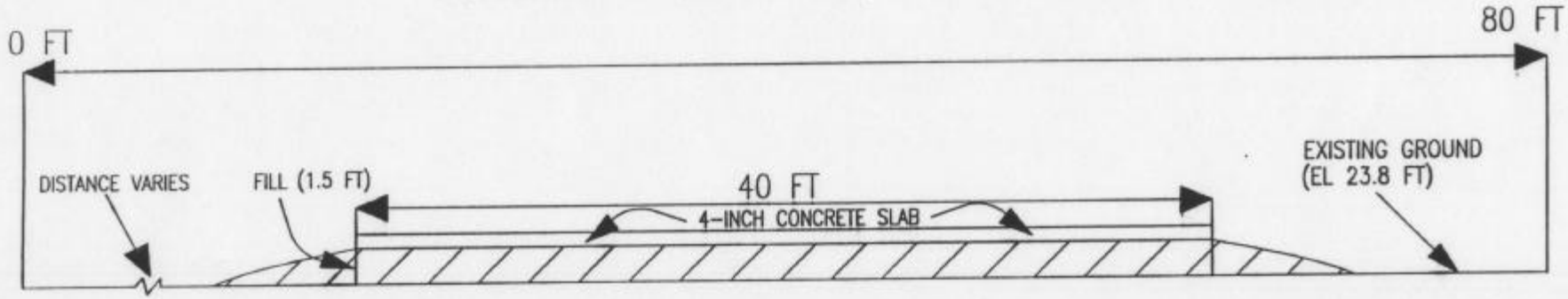

FIGURE 7. TYPICAL DRIVEWAY CROSS-SECTION IN WETLANDS.

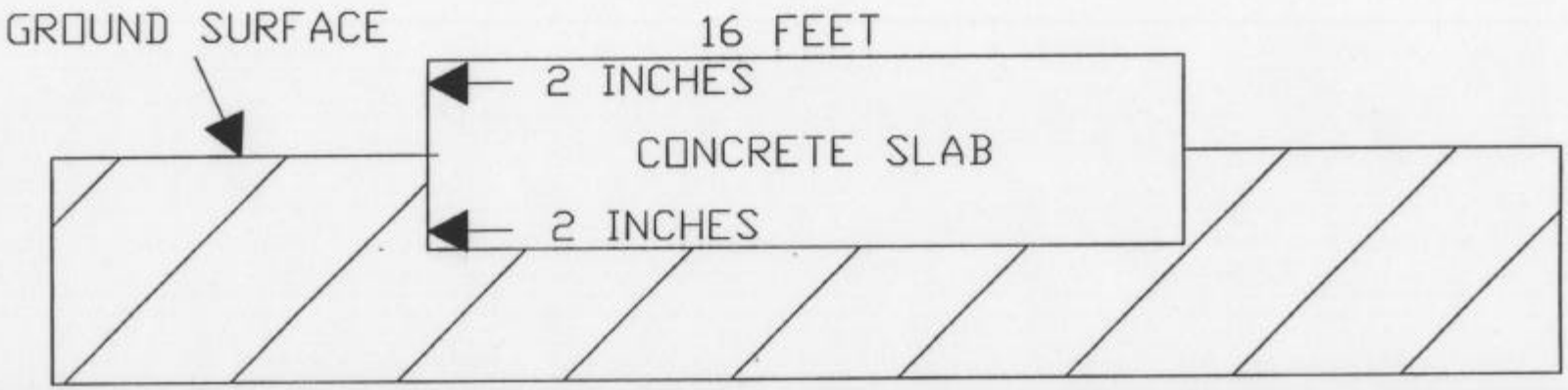

HORIZONTAL SCALE: 1 INCH = 4 FEET VERTICAL SCALE: 1 INCH = 4 INCHES

FILL IN WETLANDS
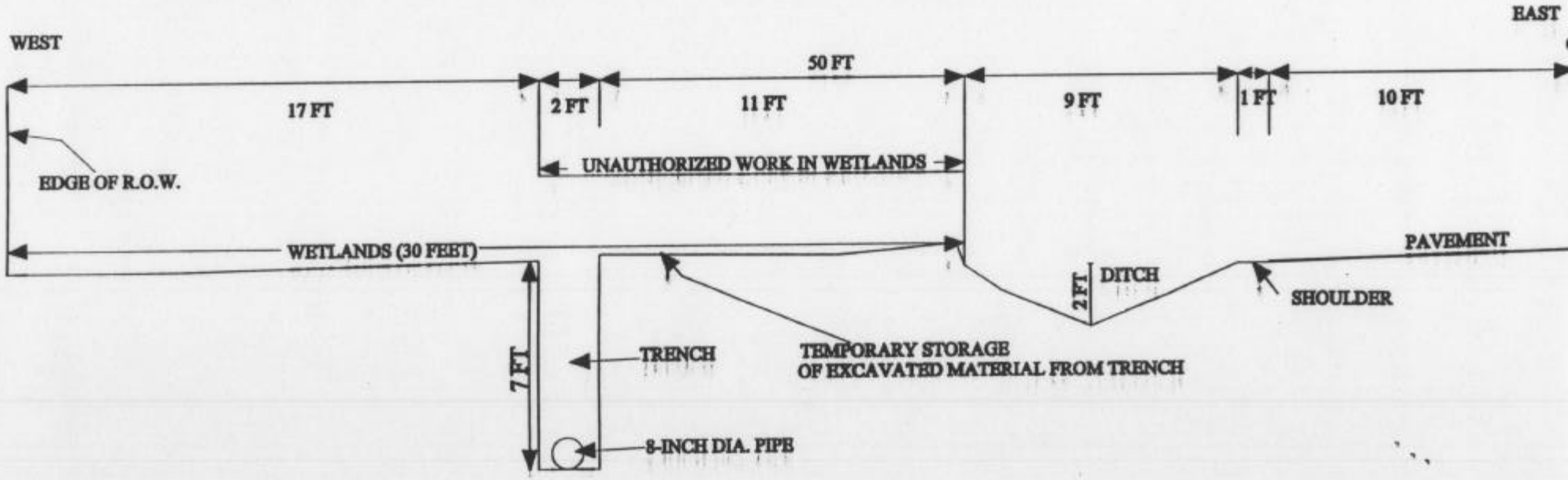
FIGURE 8. TYPICAL CROSS-SECTION THROUGH WETLANDS OF A PROPOSED 8-INCH SEWER LINE FROM THE CENTERLINE OF HELENBIRG ROAD TO THE EDGE OF ROAD RIGHT-OF-WAY.