Drawing 1of8
The Garden Walk
Section 404 application

GARDEN WALK
ST. TAMMANY PARISH, LA.

VICINITY MAP

| | | | |
|---|---|---|---|
| SCALE: | N.T.S. | DATE: | 09-26-12 |
| DRAWN: | DRJ | JOB NO.: | |
| REVISED: | | | |

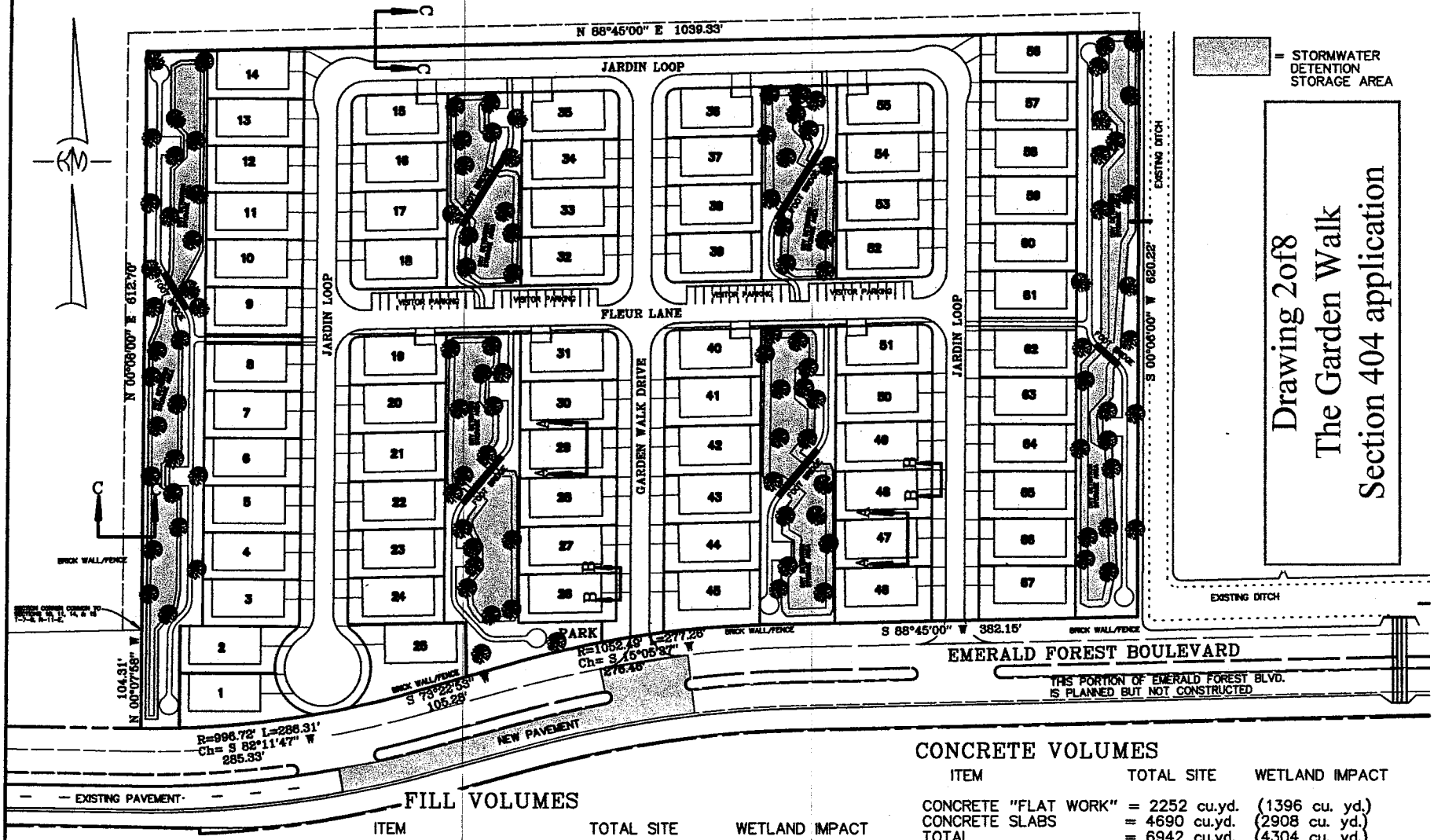


## FILL VOLUMES

| ITEM | TOTAL SITE | WETLAND IMPACT |
|---|---|---|
| EARTH FILL TO 27.0' | = 17863 cu. yd. | (11075 cu. yd) |
| EARTH FILL FOR HOMES | = 4690 cu. yd. | (2908 cu. yd.) |
| TOTAL EARTH FILL | = 22,553 cu. yd. | ( 13983 cu. yd.) |

## CONCRETE VOLUMES

| ITEM | TOTAL SITE | WETLAND IMPACT |
|---|---|---|
| CONCRETE "FLAT WORK" | = 2252 cu.yd. | (1396 cu. yd.) |
| CONCRETE SLABS | = 4690 cu.yd. | (2908 cu. yd.) |
| TOTAL | = 6942 cu.yd. | (4304 cu. yd.) |

NOTE:
"FLAT WORK" INCLUDES WALKING PATHS, DRIVEWAYS, STREETS, AND SDSA BOTTOM.

PROJECT NAME

GARDENWALK
16.32 ACRES

SITE PLAN

| | | | |
|---|---|---|---|
| SCALE | 1" = 150' | DATE | 10-03-12 |
| DRAWN | DRJ | JOB NO. | 12-100 |
| REVISIONS | | | |

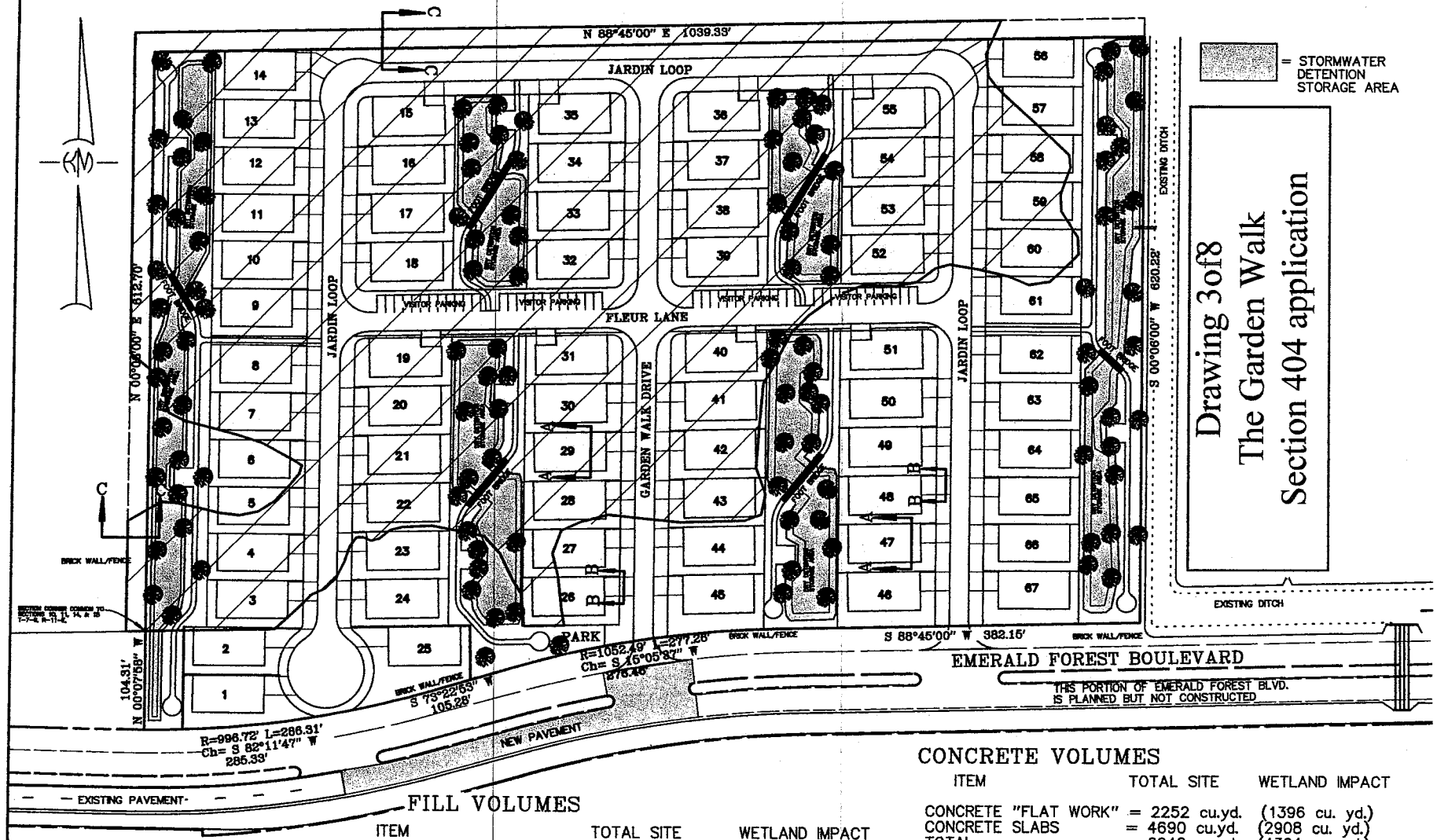


TOTAL DEVELOPMENT = 16.32 ac.

= WETLANDS (10.13 ac./62%)

## FILL VOLUMES

| ITEM | TOTAL SITE | WETLAND IMPACT |
|---|---|---|
| EARTH FILL TO 27.0' | = 17863 cu. yd. | (11075 cu. yd) |
| EARTH FILL FOR HOMES | = 4690 cu. yd. | (2908 cu. yd.) |
| TOTAL EARTH FILL | = 22,553 cu. yd. | ( 13983 cu. yd.) |

## CONCRETE VOLUMES

| ITEM | TOTAL SITE | WETLAND IMPACT |
|---|---|---|
| CONCRETE "FLAT WORK" | = 2252 cu.yd. | (1396 cu. yd.) |
| CONCRETE SLABS | = 4690 cu.yd. | (2908 cu. yd.) |
| TOTAL | = 6942 cu.yd. | (4304 cu. yd.) |

NOTE:
"FLAT WORK" INCLUDES WALKING PATHS, DRIVEWAYS, STREETS, AND SDSA BOTTOM.

PROJECT NAME

GARDENWALK

WETLANDS MAP

| | | | |
|---|---|---|---|
| SCALE | 1" = 150' | DATE | 10-03-12 |
| DRAWN | DRJ | JOB NO. | 12-100 |
| REVISIONS | | | |

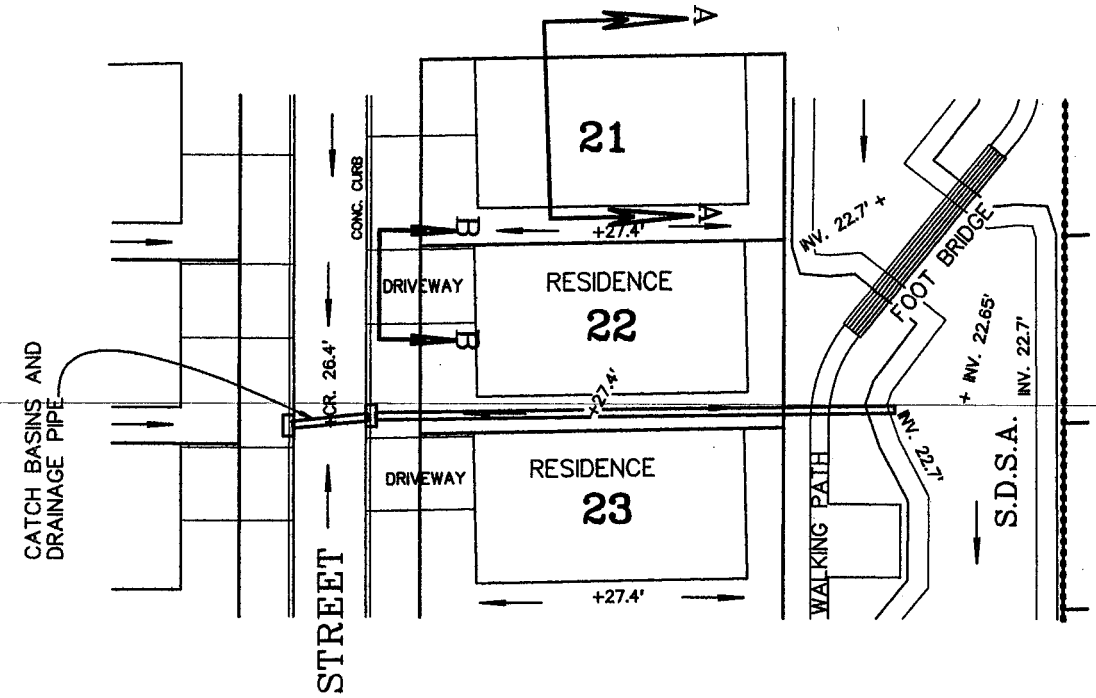


← = DIRECTION OF SURFACE FLOW

Drawing 4of8
The Garden Walk
Section 404 application

# TYPICAL LOT DRAINAGE

## GARDEN WALK

| | | | |
|---|---|---|---|
| SCALE: | 1" = 50' | DATE: | 10-03-12 |
| DRAWN: | DRJ | JOB NO.: | 12-100 |
| REVISED: | | | |

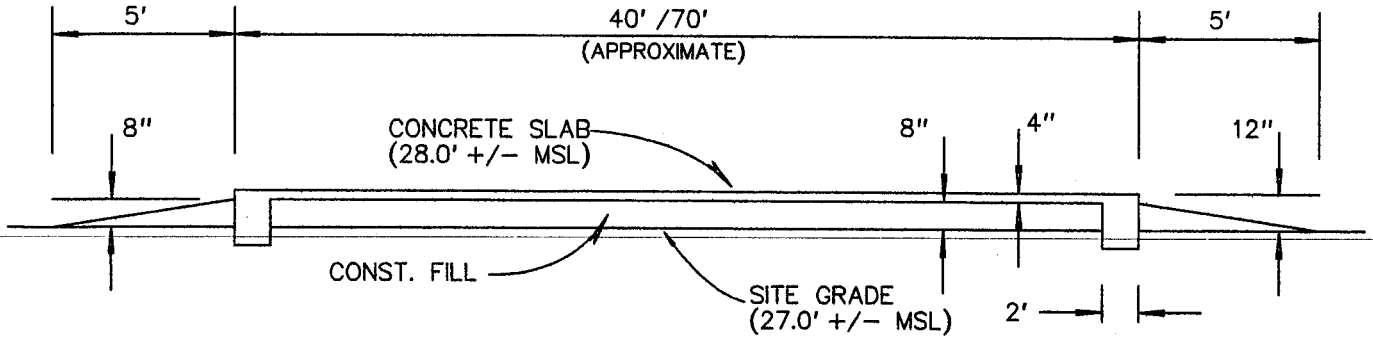


# SECTION A-A

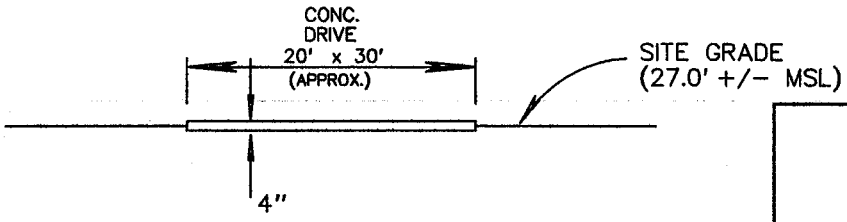


# SECTION B-B

Drawing 5of8
The Garden Walk
Section 404 application

## FILL VOLUMES

| ITEM | TOTAL SITE | WETLAND IMPACT |
|---|---|---|
| EARTH FILL TO 27.0' | = 17863 cu. yd. | (11075 cu. yd.) |
| EARTH FILL FOR HOMES | = 4690 cu. yd. | (2908 cu. yd.) |
| TOTAL EARTH FILL | = 22,553 cu. yd. | ( 13983 cu. yd.) |

## CONCRETE VLOUMES

| ITEM | TOTAL SITE | WETLAND IMPACT |
|---|---|---|
| CONCRETE SLABS | = 4690 cu. yd. | (2908 cu. yd.) |
| CONCRETE DRIVEWAYS | = 493 cu. yd. | (306 cu. yd.) |

# SECTION VIEWS

## GARDENWALK

| | | | |
|---|---|---|---|
| SCALE: | N.T.S. | DATE: | 10-03-12 |
| DRAWN: | DRJ | JOB NO.: | 12-100 |
| REVISED: | | | |

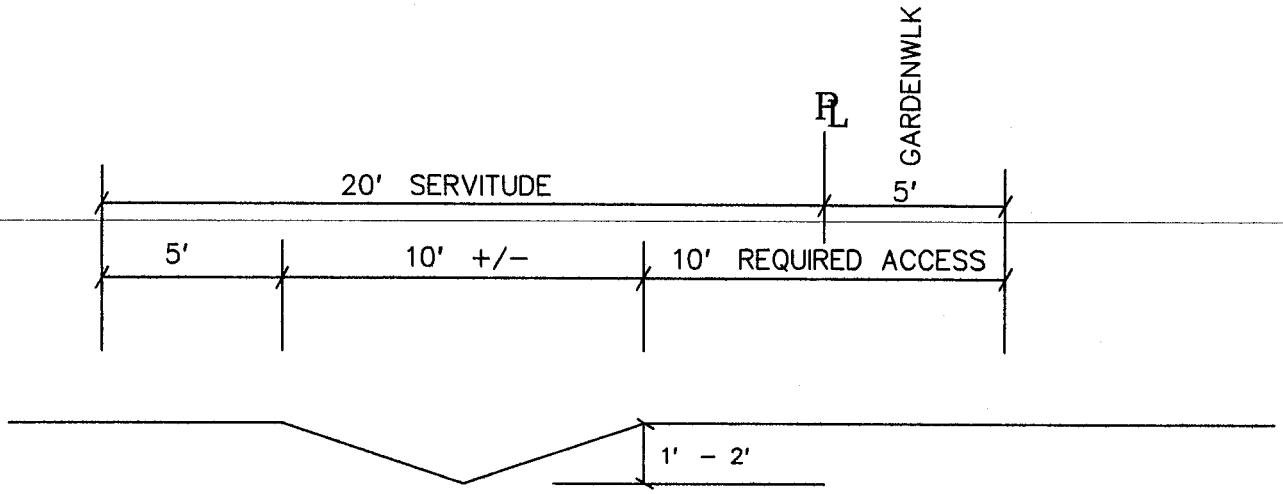


PROPOSED DITCH ALONG WESTERN AND NORTHER PROPERTY LINES

Drawing 6of8
The Garden Walk
Section 404 application

SECTION C-C

GARDEN WALK

| | | | |
|---|---|---|---|
| SCALE: | 1" = 5' | DATE: | 10-03-12 |
| DRAWN: | DRJ | JOB NO.: | 12-100 |
| REVISED: | | | |

Drawing 7of8
The Garden Walk
Section 404 application

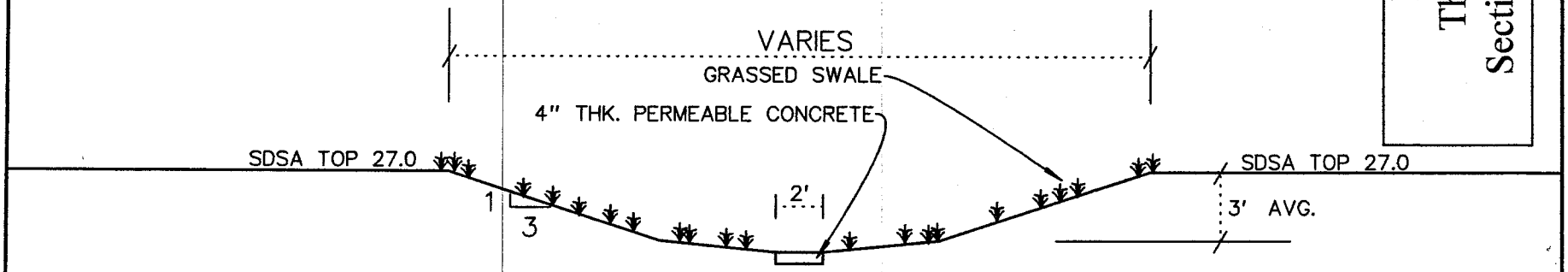


# SECTION S.D.S.A.

N.T.S.

| PROJECT NAME | SECTION S.D.S.A. | |
|---|---|---|
| GARDEN WALK | SCALE N.T.S. | DATE 10-01-12 |
| | DRAWN DRJ | JOB NO. 12-100 |
| | REVISIONS | |

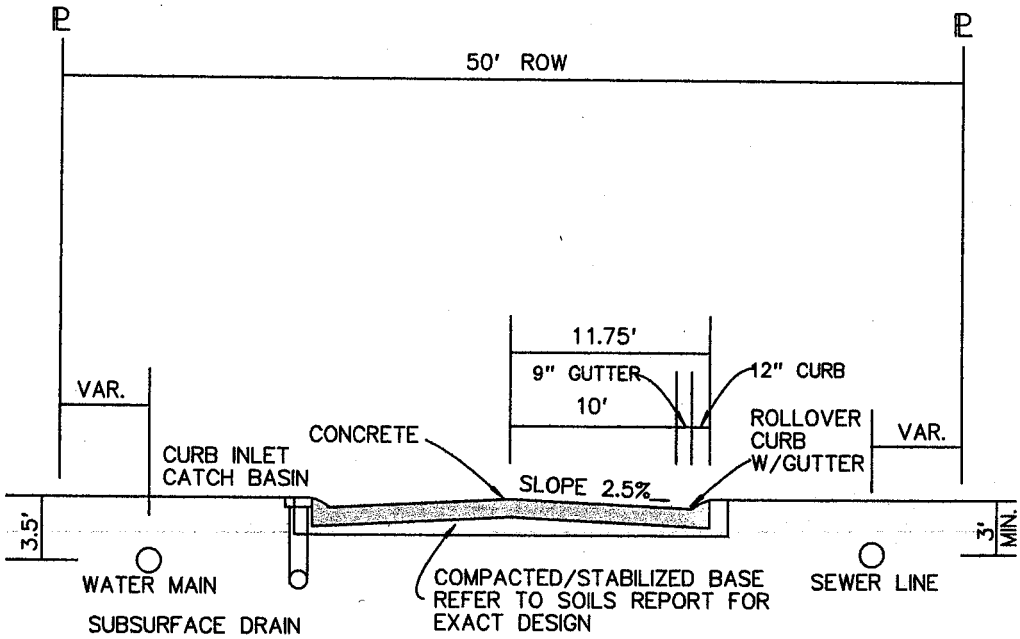


Drawing 8of8
The Garden Walk
Section 404 application

STREET SECTION

GARDENWALK

| | | | |
|---|---|---|---|
| SCALE: | N.T.S. | DATE: | 10-03-12 |
| DRAWN: | DRJ | JOB NO.: | 12-100 |
| REVISED: | | | |