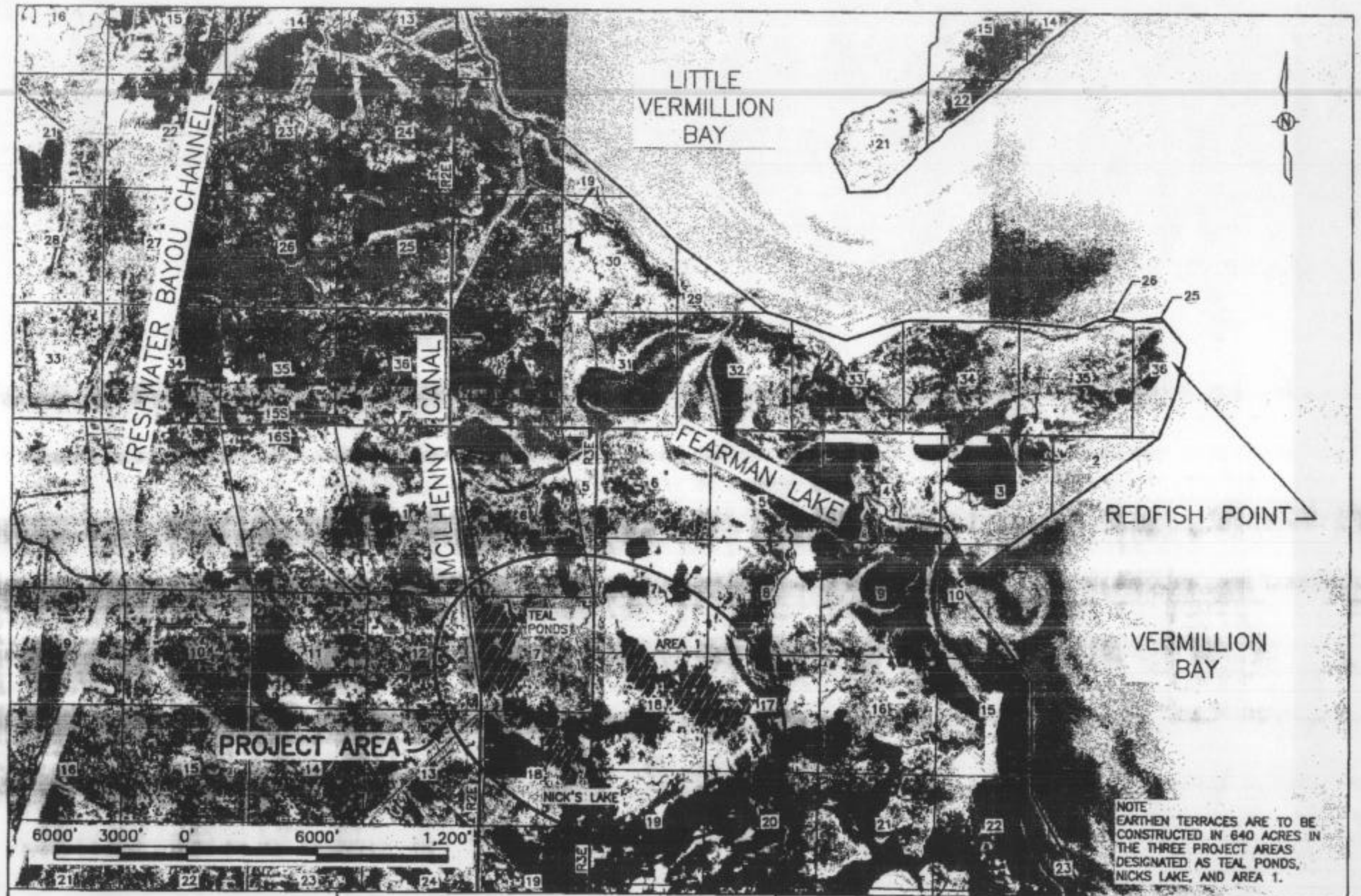

PREPARED BY: LDNR-CED APPLICANT: NATIONAL MARINE FISHERIES SERVICE CONTACT: RICK HARTMAN PHONE: 225-389-0508	LOUISIANA DEPARTMENT OF NATURAL RESOURCES COASTAL ENGINEERING DIVISION 617 NORTH 3RD STREET BATON ROUGE, LOUISIANA 70802	RAINEY AUDUBON WILDLIFE SANCTUARY EARTHEN TERRACES	VICINITY MAP
		STATE PROJECT NUMBER:	DATE: 12/22/03
DRAWN BY: KRISTI CANTU	DESIGNED BY: RUSS JOFFRION, P.E. / APPROVED BY: LUKE LE BAS, P.E.	FEDERAL PROJECT NUMBER:	SHEET 1 OF 2

G:\Users\Autocad\BASINS\TE\Rainey Ref\Permit&Plans\C1 PI Title.dwg

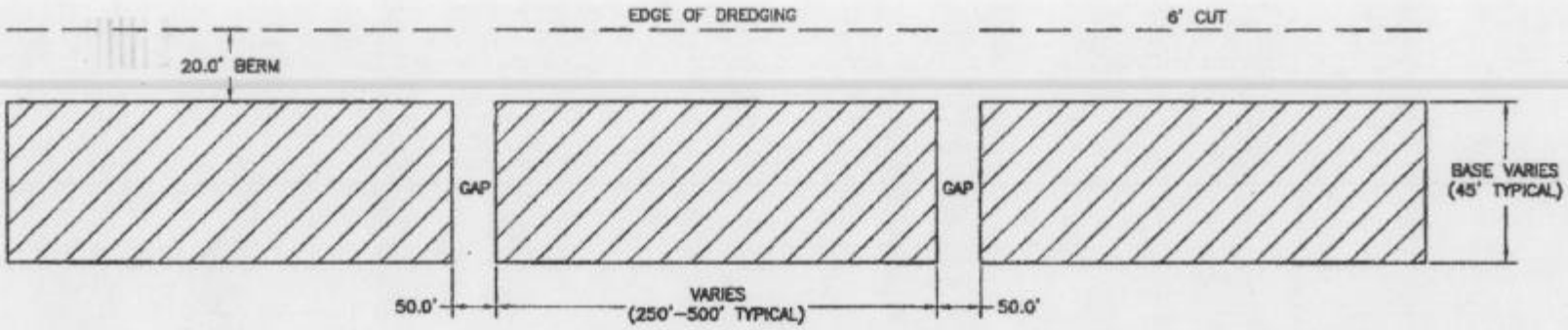

SPOIL DETAIL

1" = 200' HORIZONTAL
1" = 50' VERTICAL

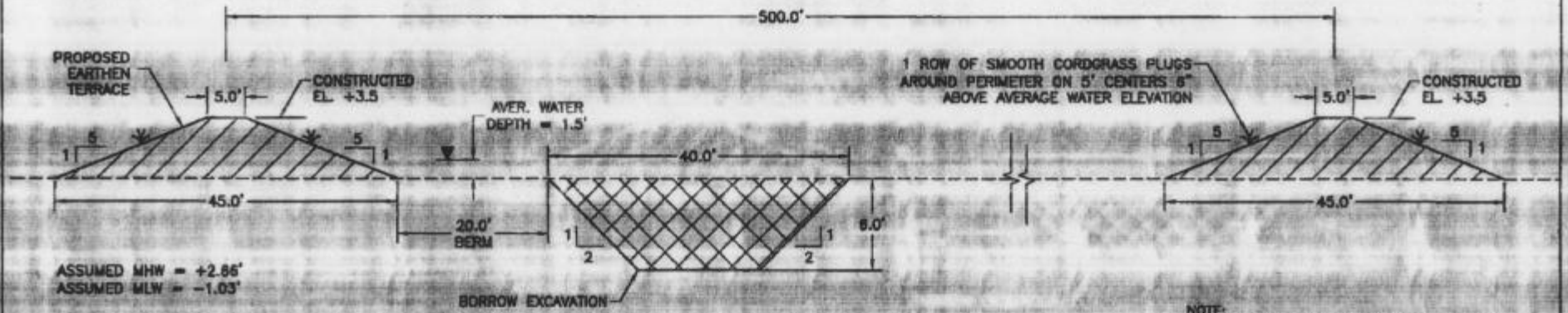

TYPICAL EARTHEN TERRACE SECTION

1" = 20' HORIZONTAL
1" = 10' VERTICAL

NOTE:
ALL ELEVATIONS ARE GIVEN IN THE NORTH AMERICAN VERTICAL DATUM OF 1988 (NAVD 88).

PROPOSED EXCAVATION
APPROX. 36,030.0 LIN. FT. OF DREDGING
APPROX. 244,187.0 CU. YRDS. OF DREDGING
APPROX. 33.1 ACRES OF DREDGING
APPROX. 36,030.0 LIN. FT. OF TERRACES
APPROX. 133,444.0 CU. YRDS. OF TERRACES
APPROX. 37.2 ACRES OF TERRACES

PREPARED BY: LDNR-CED APPLICANT: NATIONAL MARINE FISHERIES SERVICE CONTACT: RICK HARTMAN PHONE: 225-389-0508	LOUISIANA DEPARTMENT OF NATURAL RESOURCES COASTAL ENGINEERING DIVISION 617 NORTH 3RD STREET BATON ROUGE, LOUISIANA 70802		RAINEY AUDUBON WILDLIFE SANCTUARY EARTHEN TERRACES	SPOIL DETAIL AND TYPICAL TERRACE SECTION
			STATE PROJECT NUMBER:	DATE: 12/23/03
DRAWN BY: KRISTI CANTU	DESIGNED BY: RUSS JOFFRION, P.E.	APPROVED BY: LUKE LEBAS, P.E.	FEDERAL PROJECT NUMBER:	SHEET 2 OF 2

G:\Users\Autocad\BASINS\TE\Rainey Ref\Permit&Plans\C6 P5 Typ Sec.dwg

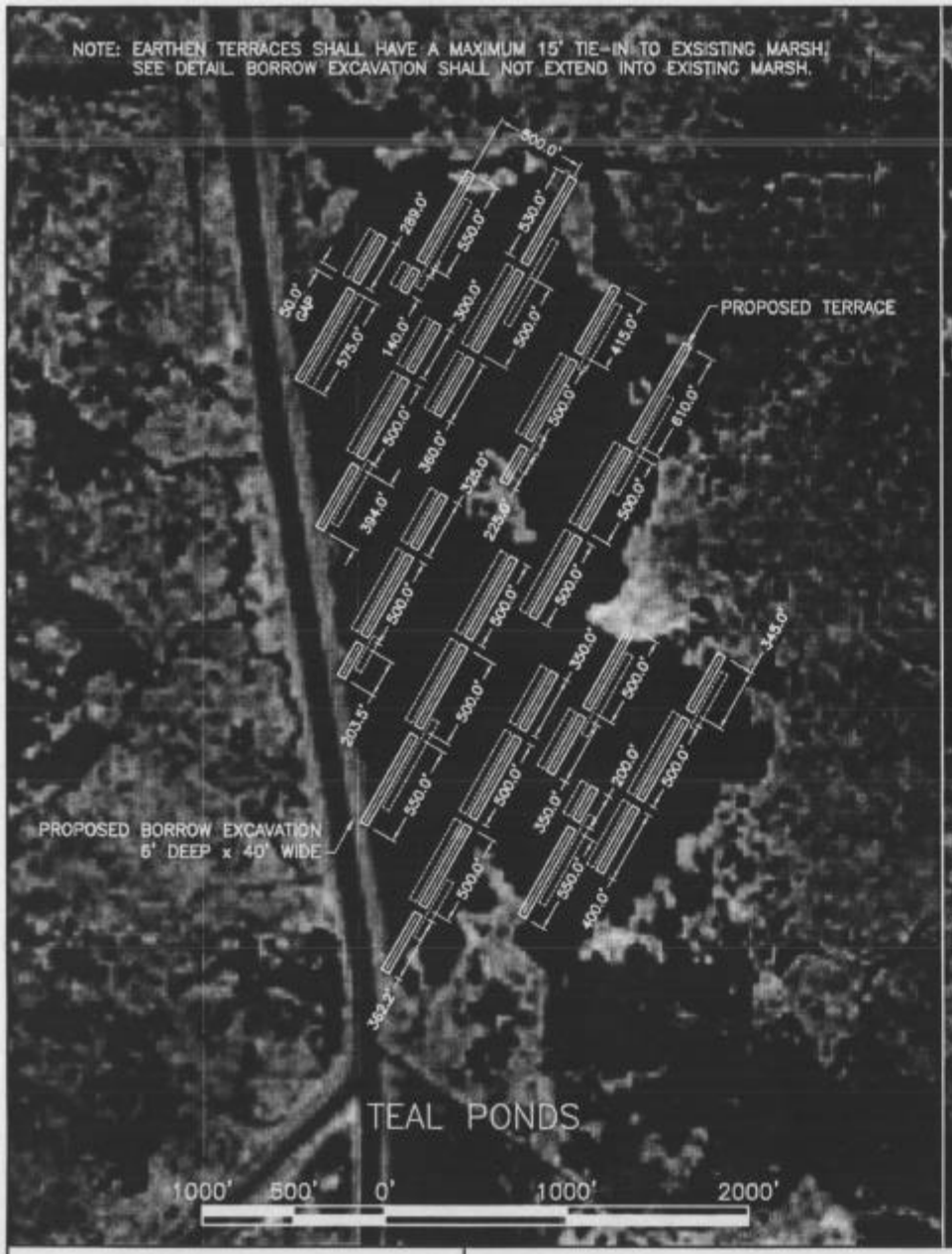

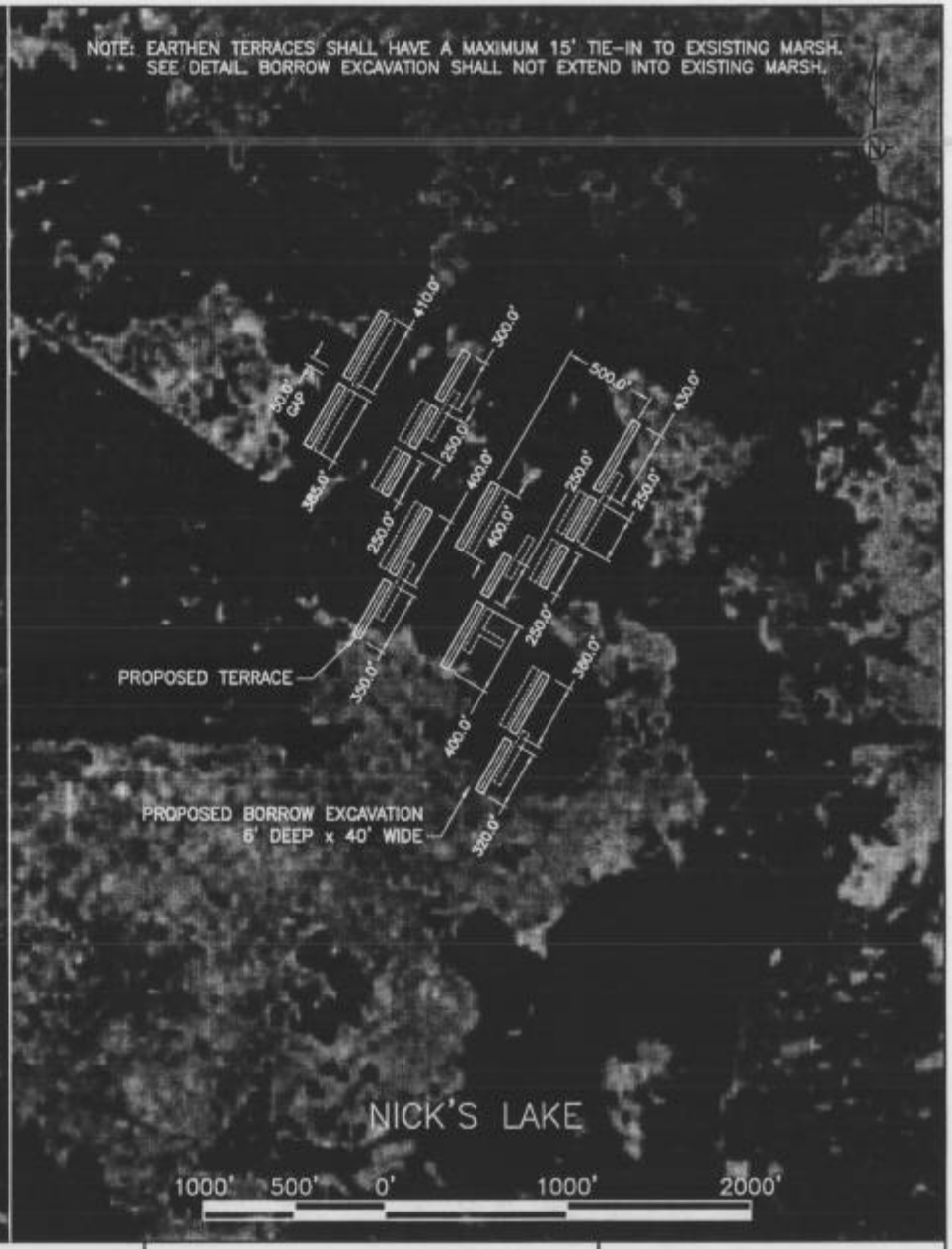

	LOUISIANA DEPARTMENT OF NATURAL RESOURCES **COASTAL ENGINEERING DIVISION** 617 NORTH 3RD STREET BATON ROUGE, LOUISIANA 70802		RAINEY AUDUBON WILDLIFE SANCTUARY EARTHEN TERRACES	EARTHEN TERRACE LAYOUT
			STATE PROJECT NUMBER:	DATE: MARCH 2004
DRAWN BY: KRISTI CANTU	DESIGNED BY: RUSS JOFFRION, P.E.	APPROVED BY: LUKE LEBAS, P.E.	FEDERAL PROJECT NUMBER:	SHEET 3 OF 7

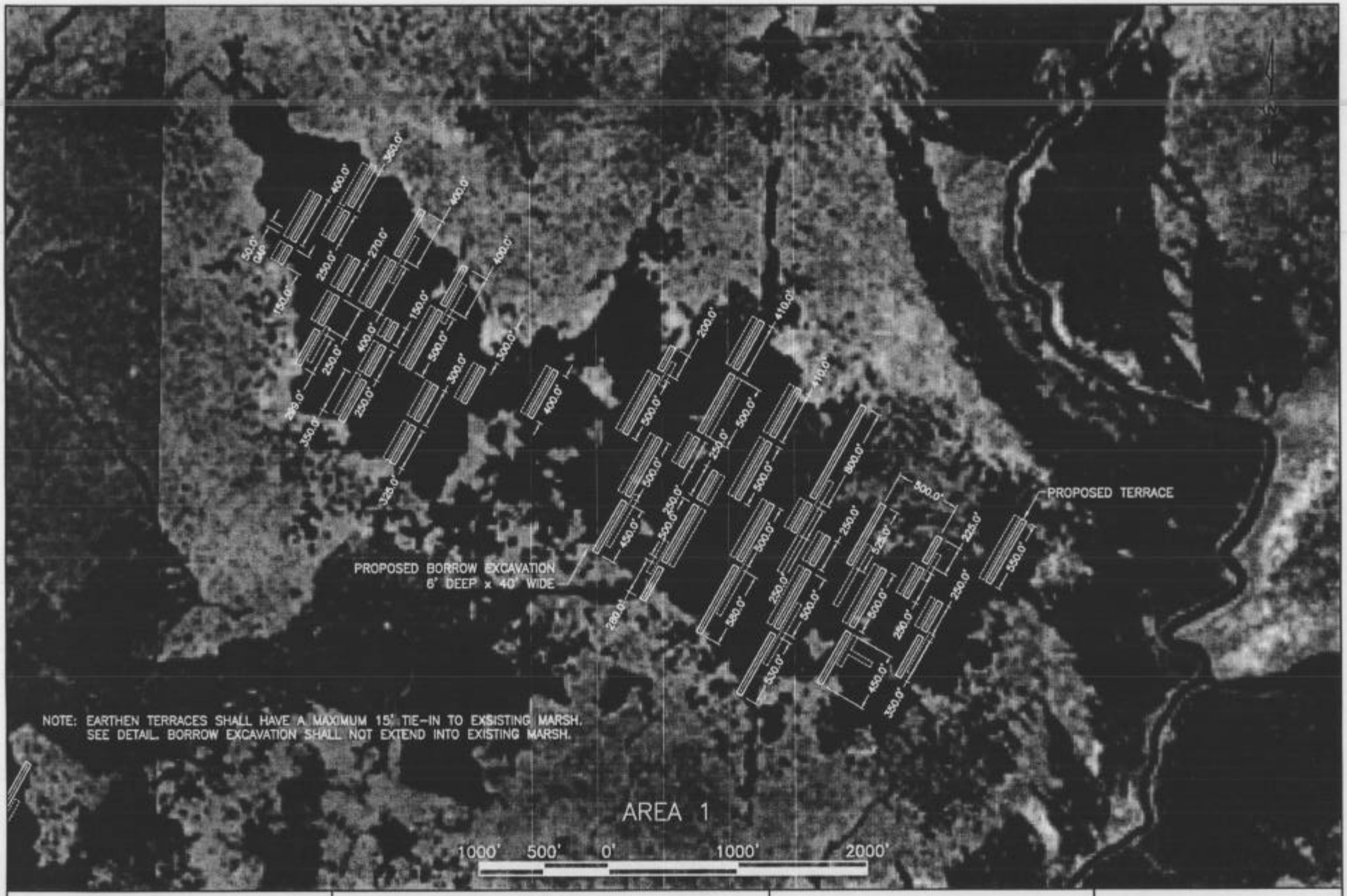

	LOUISIANA DEPARTMENT OF NATURAL RESOURCES COASTAL ENGINEERING DIVISION 617 NORTH 3RD STREET BATON ROUGE, LOUISIANA 70802		RAINEY AUDUBON WILDLIFE SANCTUARY EARTHEN TERRACES	EARTHEN TERRACE LAYOUT
			STATE PROJECT NUMBER:	DATE: MARCH 2004
DRAWN BY: KRISTI CANTU	DESIGNED BY: RUSS JOFFRION, P.E.	APPROVED BY: LUKE LEBAS, P.E.	FEDERAL PROJECT NUMBER:	SHEET 4 OF 7

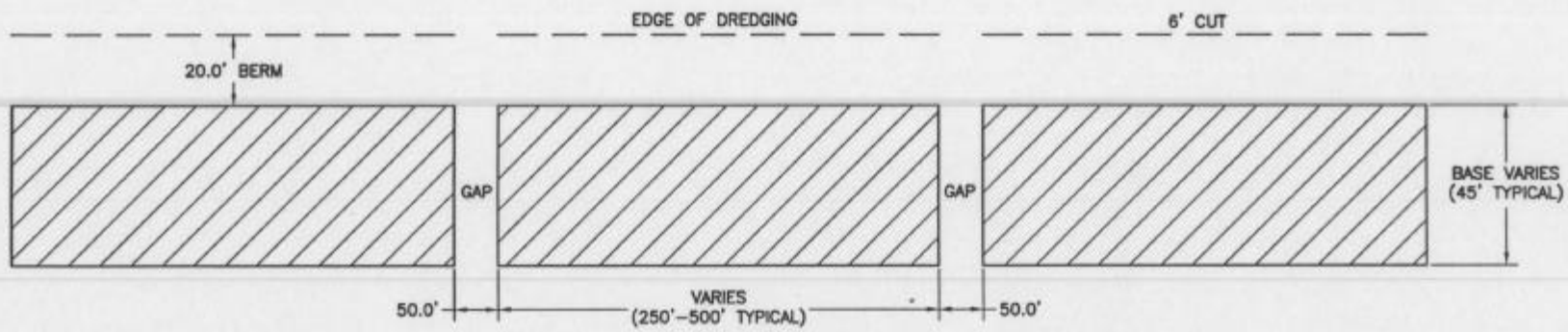

SPOIL DETAIL

1" = 200' HORIZONTAL
1" = 50' VERTICAL

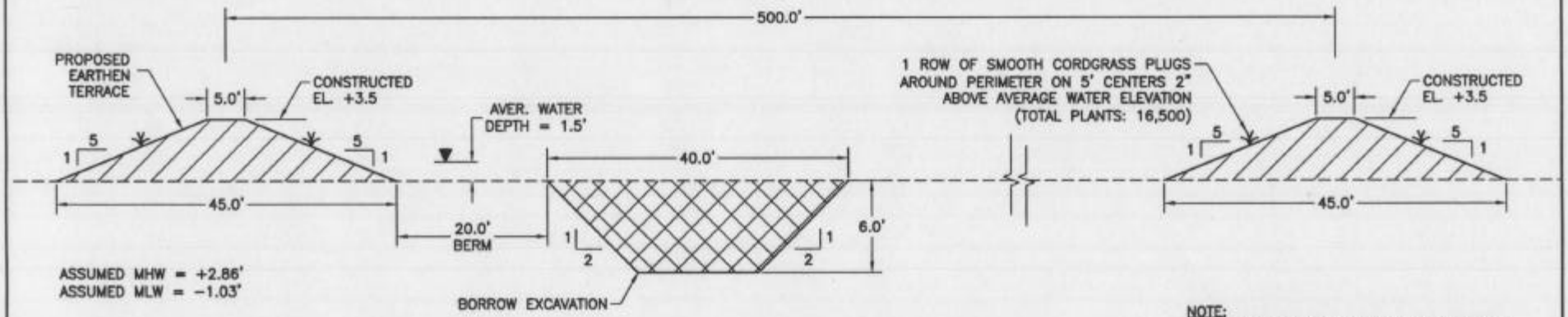

TYPICAL EARTHEN TERRACE SECTION

1" = 20' HORIZONTAL
1" = 10' VERTICAL

NOTE:
ALL ELEVATIONS ARE GIVEN IN THE NORTH AMERICAN VERTICAL DATUM OF 1988 (NAVD 88).

PROPOSED EXCAVATION
APPROX. 36,030.0 LIN. FT. OF DREDGING
APPROX. 244,187.0 CU. YRDS. OF DREDGING
APPROX. 33.1 ACRES OF DREDGING
APPROX. 36,030.0 LIN. FT. OF TERRACES
APPROX. 133,444.0 CU. YRDS. OF TERRACES
APPROX. 37.2 ACRES OF TERRACES

PREPARED BY: LDNR-CED APPLICANT: NATIONAL MARINE FISHERIES SERVICE CONTACT: RICK HARTMAN PHONE: 225-389-0508	LOUISIANA DEPARTMENT OF NATURAL RESOURCES COASTAL ENGINEERING DIVISION 617 NORTH 3RD STREET BATON ROUGE, LOUISIANA 70802		RAINEY AUDUBON WILDLIFE SANCTUARY EARTHEN TERRACES	SPOIL DETAIL AND TYPICAL TERRACE SECTION
			STATE PROJECT NUMBER:	DATE: MARCH 2004
DRAWN BY: KRISTI CANTU	DESIGNED BY: RUSS JOFFRION, P.E.	APPROVED BY: LUKE LEBAS, P.E.	FEDERAL PROJECT NUMBER:	SHEET 5 OF 7

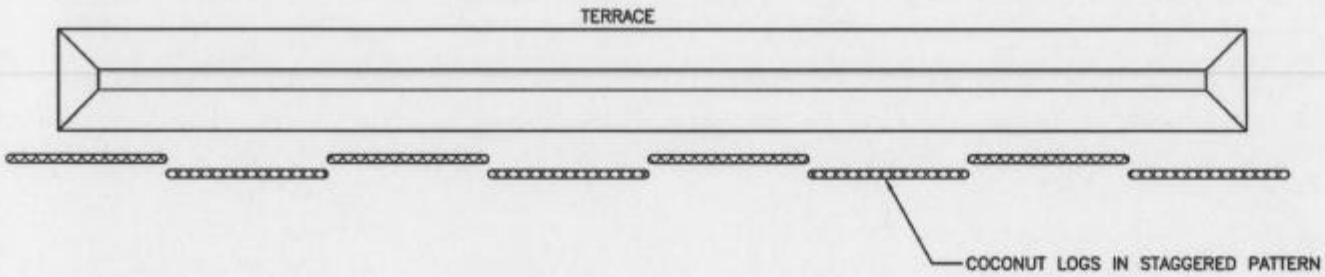

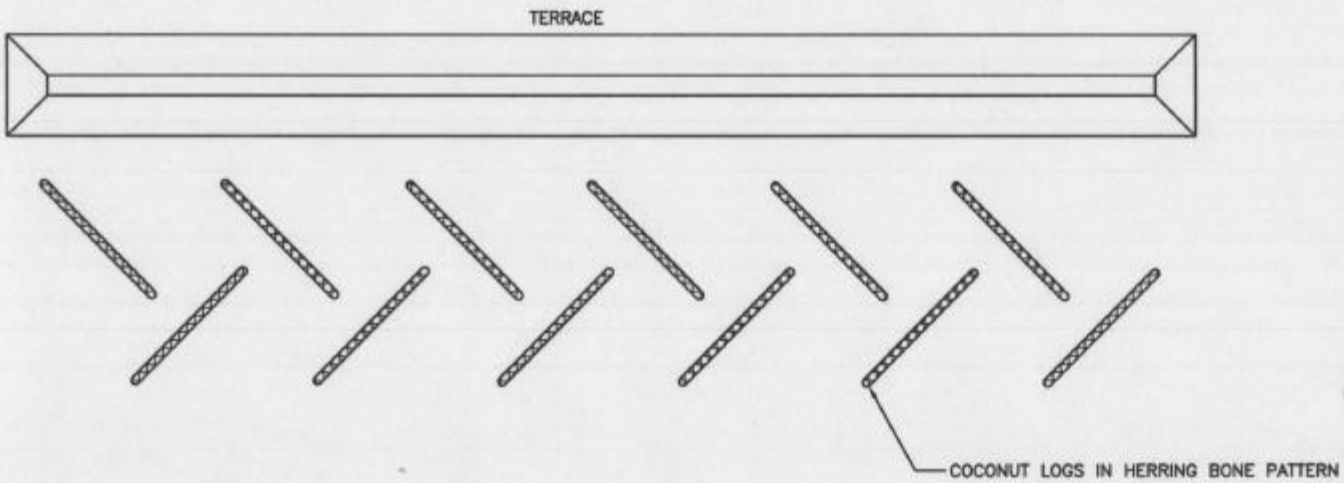

NOTES:

THREE 500' SECTIONS TO BE CHOSEN DURING CONSTRUCTION.

COCONUT LOGS TO BE PLACED ON SOUTHEAST SIDE OF TERRACE.

COCONUT LOGS ARE 20' LONG X 1' IN CIRCUFERENCE. THEY ARE MADE FROM AN INNER CORE OF COMPACTED MATTRESS COIR.

THE OUTER NET SHALL BE MADE OF BRISTLE COIR TWINE, 2" X 2" MESH.

DRAWING SCALE = NTS

PREPARED BY: LDNR-CED APPLICANT: NATIONAL MARINE FISHERIES SERVICE CONTACT: RICK HARTMAN PHONE: 225-389-0508	LOUISIANA DEPARTMENT OF NATURAL RESOURCES COASTAL ENGINEERING DIVISION 617 NORTH 3RD STREET BATON ROUGE, LOUISIANA 70802		RAINEY AUDUBON WILDLIFE SANCTUARY EARTHEN TERRACES	BIO-ROLL LAYOUT AND SPECIFICATIONS
			STATE PROJECT NUMBER:	DATE: MARCH 2004
DRAWN BY: KRISTI CANTU	DESIGNED BY: RUSS JOFFRION, P.E.	APPROVED BY: LUKE LEBAS, P.E.	FEDERAL PROJECT NUMBER:	SHEET 6 OF 7

NOTE: EARTHEN TERRACES SHALL HAVE A MAX. 15' TIE-IN TO EXISTING MARSH, RESULTING IN A TOTAL OF 0.62 ACRES.

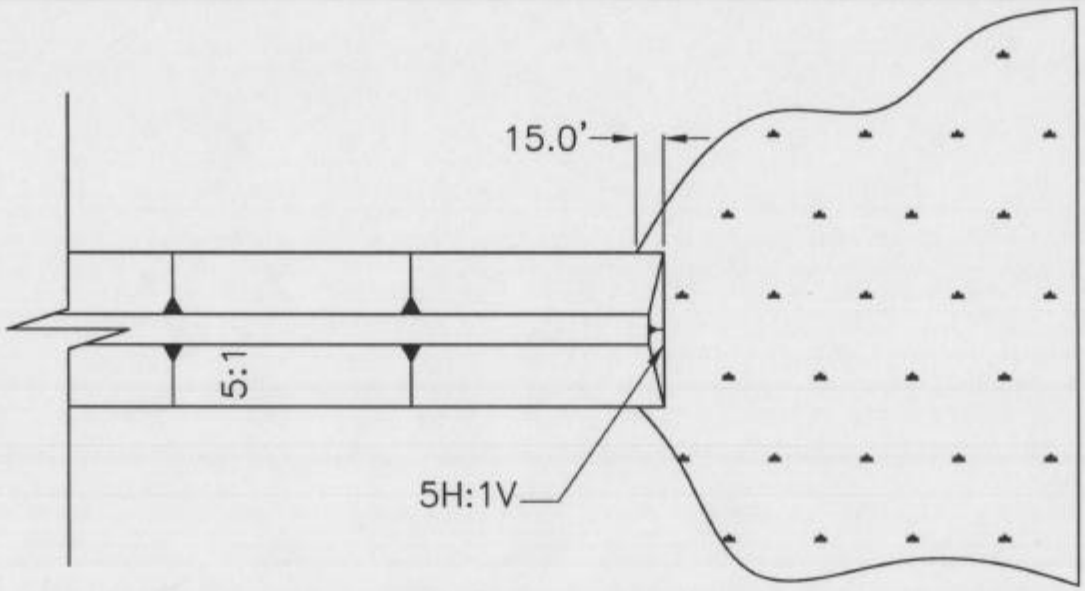

DETAIL A

EARTHEN TERRACE

100 50 0' 100 200

PREPARED BY: LDNR-CED APPLICANT: NATIONAL MARINE FISHERIES SERVICE CONTACT: RICK HARTMAN PHONE: 225-389-0508	LOUISIANA DEPARTMENT OF NATURAL RESOURCES COASTAL ENGINEERING DIVISION 617 NORTH 3RD STREET BATON ROUGE, LOUISIANA 70802	RAINEY AUDUBON WILDLIFE SANCTUARY EARTHEN TERRACES	TYPICAL MARSH EARTHEN TERRACE
		STATE PROJECT NUMBER:	DATE: MARCH 2004
DRAWN BY: KRISTI CANTU	DESIGNED BY: RUSS JOFFRION, P.E. / APPROVED BY: LUKE LEBAS, P.E.	FEDERAL PROJECT NUMBER:	SHEET 7 OF 7