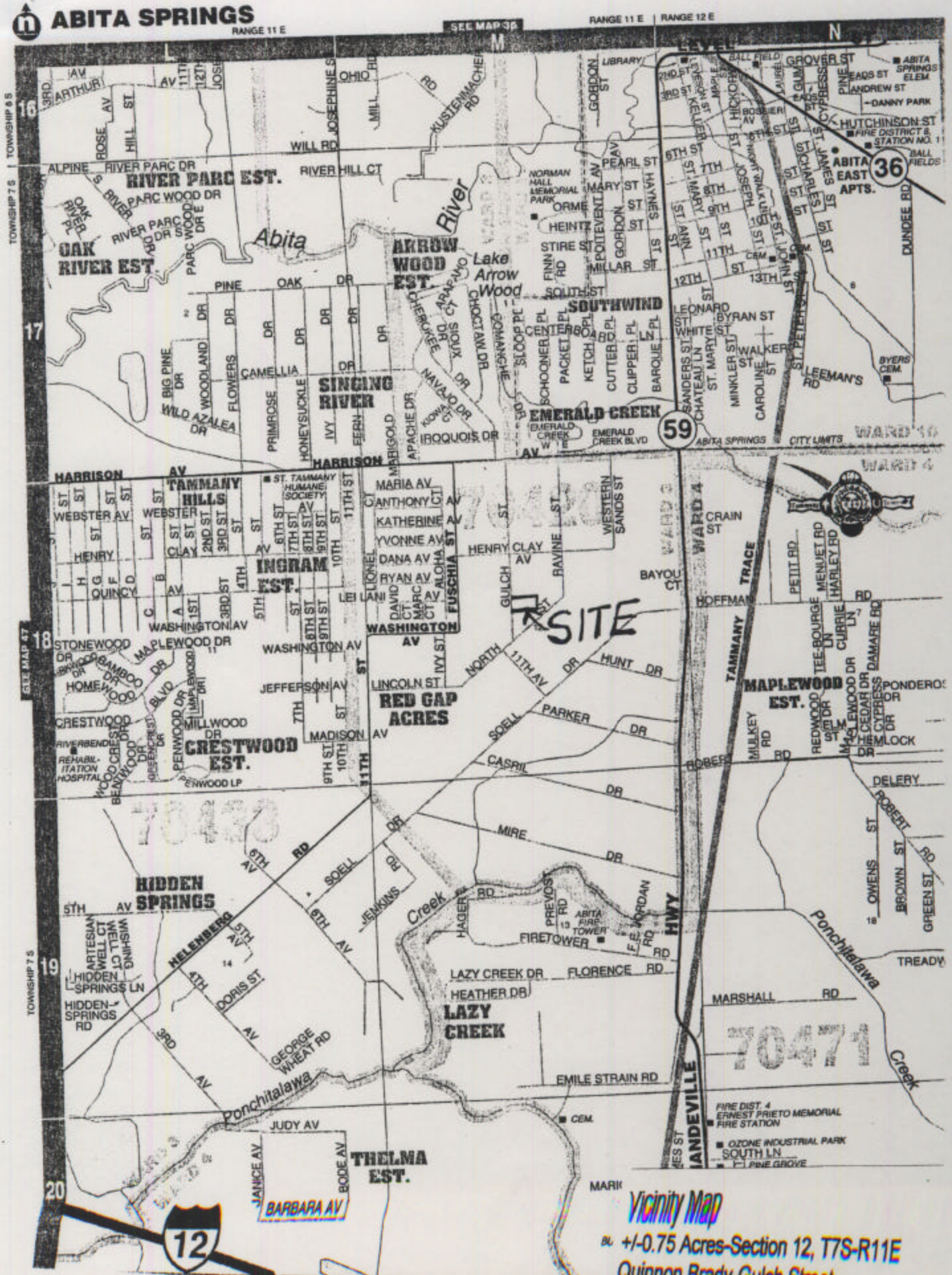
ABITA SPRINGS
RANGE 11 E
SEE MAP 36
RANGE 11 E | RANGE 12 E
TOWNSHIP 6 S
TOWNSHIP 7 S
SEE MAP 47
RIVER PARC EST.
OAK RIVER EST.
ARROW WOOD EST.
Lake Arrow Wood
Abita River
SOUTHWIND
SINGING RIVER
EMERALD CREEK
TAMMANY HILLS
INGRAM EST.
RED GAP ACRES
CRESTWOOD EST.
MAPLEWOOD EST.
HIDDEN SPRINGS
LAZY CREEK
THELMA EST.
ABITA EAST APTS.
ABITA SPRINGS CITY LIMITS
SITE
HARRISON AV
WASHINGTON AV
HELENBERG RD
Ponchitalawa Creek
HWY
MANDEVILLE
TAMMANY TRACE
BARBARA AV
Vicinity Map
+/-0.75 Acres-Section 12, T7S-R11E
Quinnon Brady-Gulch Street
St. Tammany Parish, LA

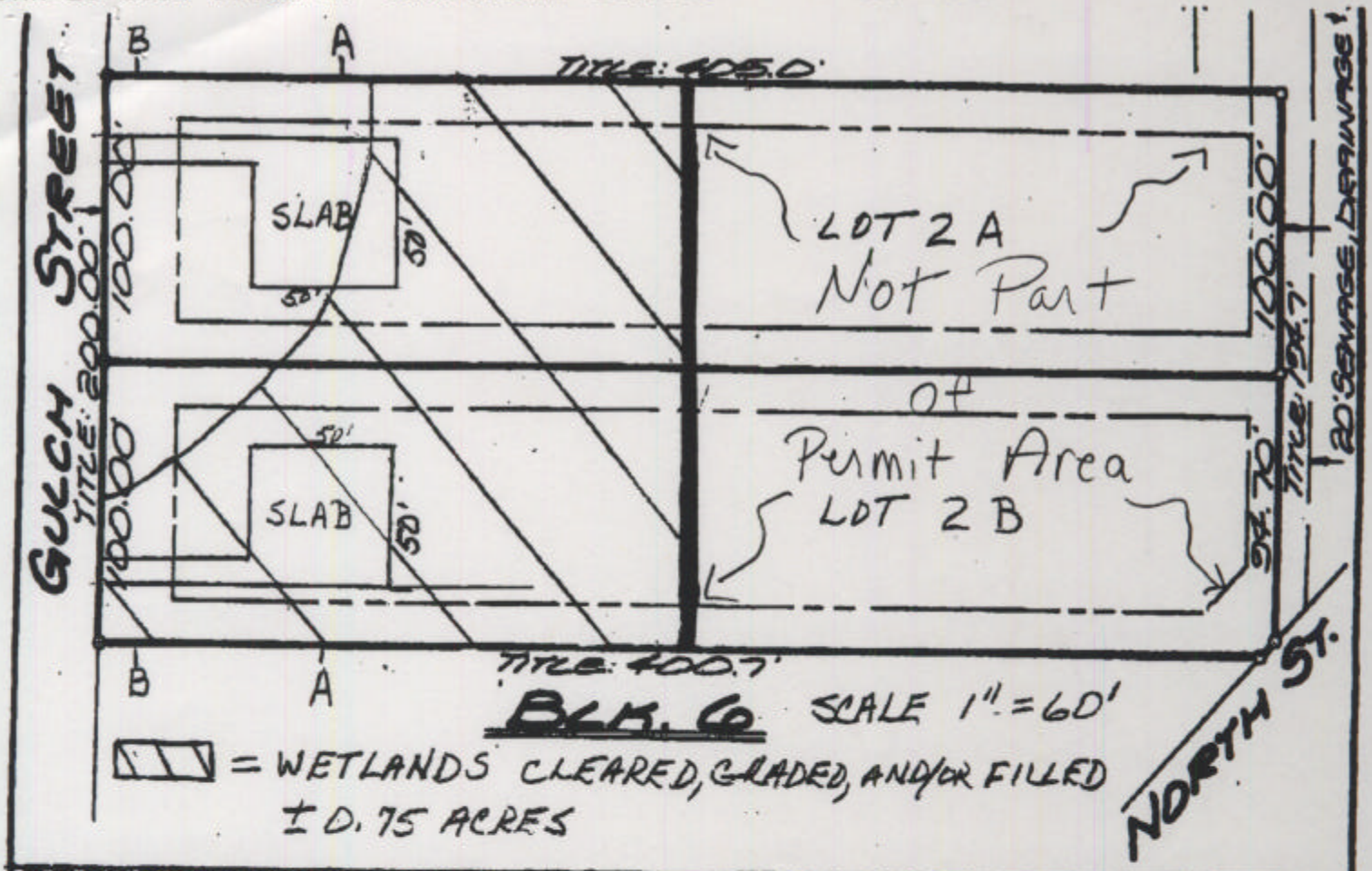

RESUBDIVISION MAP OF LOT 2 INTO LOTS 2A AND 2B BLOCK 6 RED GAP ACRES SUBDIVISION ALSO IN SECTION 12 TOWNSHIP 7 SOUTH RANGE 11 EAST ST TAMMANY PARISH LOUISIANA FOR QUINNON H. BRADY JR.

THIS MAP IS IN ACCORDANCE WITH THE MINIMUM STANDARD DETAILED REQUIREMENTS PURSUANT TO THE ACCURACY STANDARDS OF A C SURVEY AND THE APPLICABLE STANDARDS OF PRACTICE CITED IN LAC 46:LXI.

THIS PROPERTY IS LOCATED IN FLOOD ZONE C AS PER FEMA FIRM COMM. PANEL NO. 225205 0235C, MAP REVISED 10-17-1989.

STATE OF LOUISIANA
JEROM R. FITZMORRIS
REGISTERED
LAND SURVEYOR

LA. REGISTERED LAND SURVEYOR

IS LAND SURVEYING INC

Wetland Map
+/-0.75 Acres-Section 12, T7S-R11E
Quinnon Brady-Gulch Street
St. Tammany Parish, LA

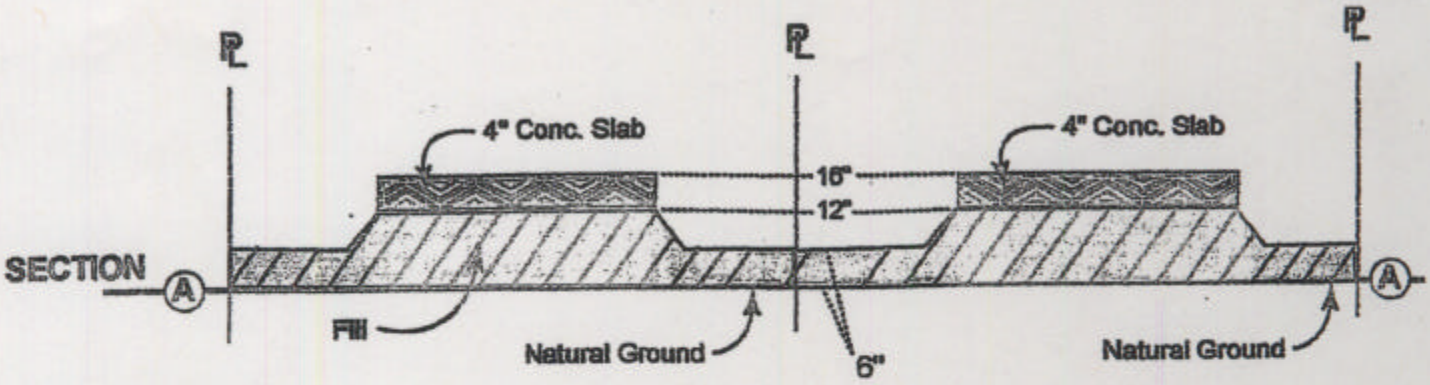

SECTION A-A
LOOKING NORTH

NOT TO SCALE

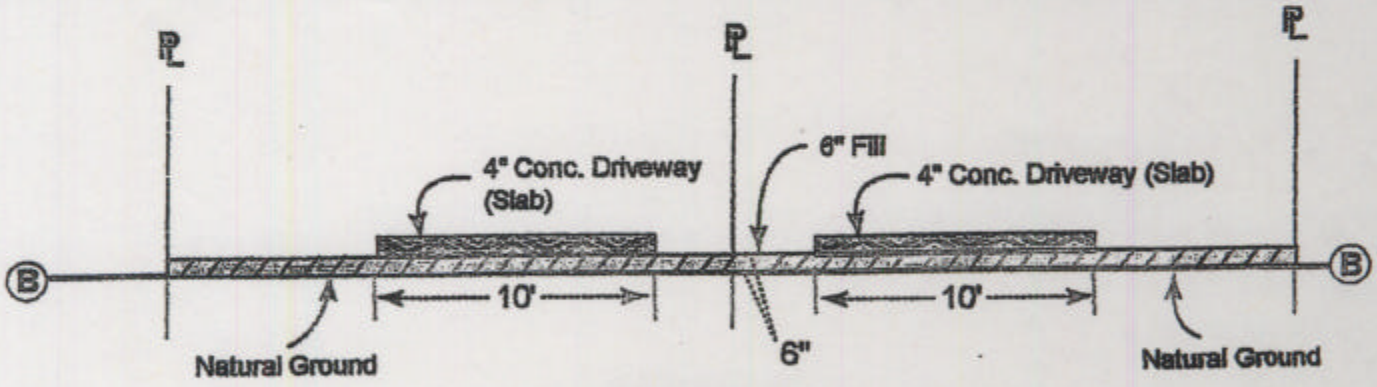

SECTION B-B

FILL IN WETLANDS = +/-600 cu. yds.

CONCRETE = +/-60 cu. yds.

PREPARED BY:
Biological Surveys
P.O.Box 94
Mandeville, LA 70470
(985)893-1321

NOT TO SCALE

Profile View

+/-0.75 Acres-Section 12, T7S-R11E
Quinnon Brady-Gulch Street
St. Tammany Parish, LA