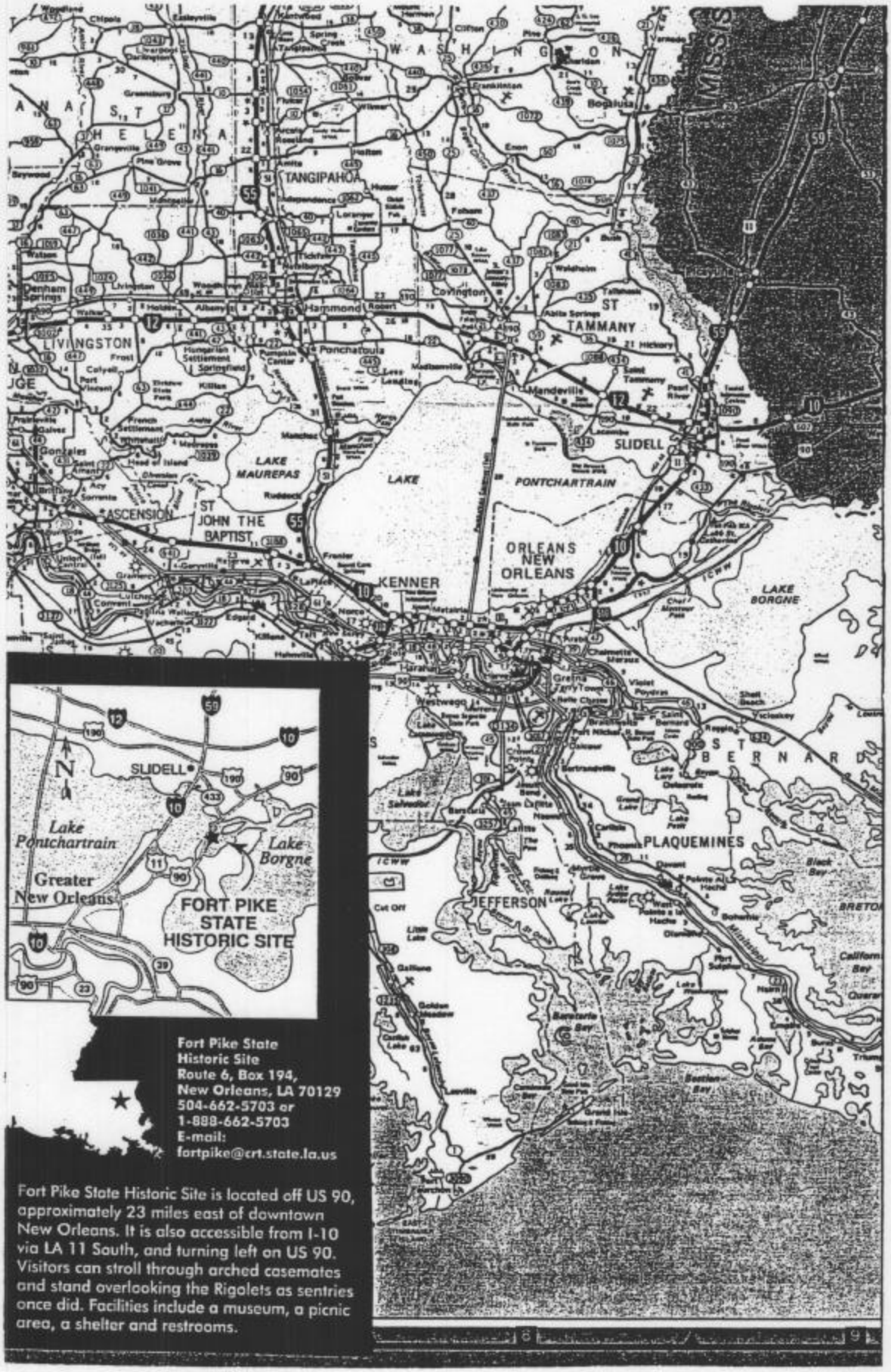

Fort Pike State
Historic Site
Route 6, Box 194,
New Orleans, LA 70129
504-662-5703 or
1-888-662-5703
E-mail:
fortpike@crt.state.la.us

Fort Pike State Historic Site is located off US 90, approximately 23 miles east of downtown New Orleans. It is also accessible from I-10 via LA 11 South, and turning left on US 90. Visitors can stroll through arched casemates and stand overlooking the Rigolets as sentries once did. Facilities include a museum, a picnic area, a shelter and restrooms.

EGG 20-020-1392-2

pg 1 of 6

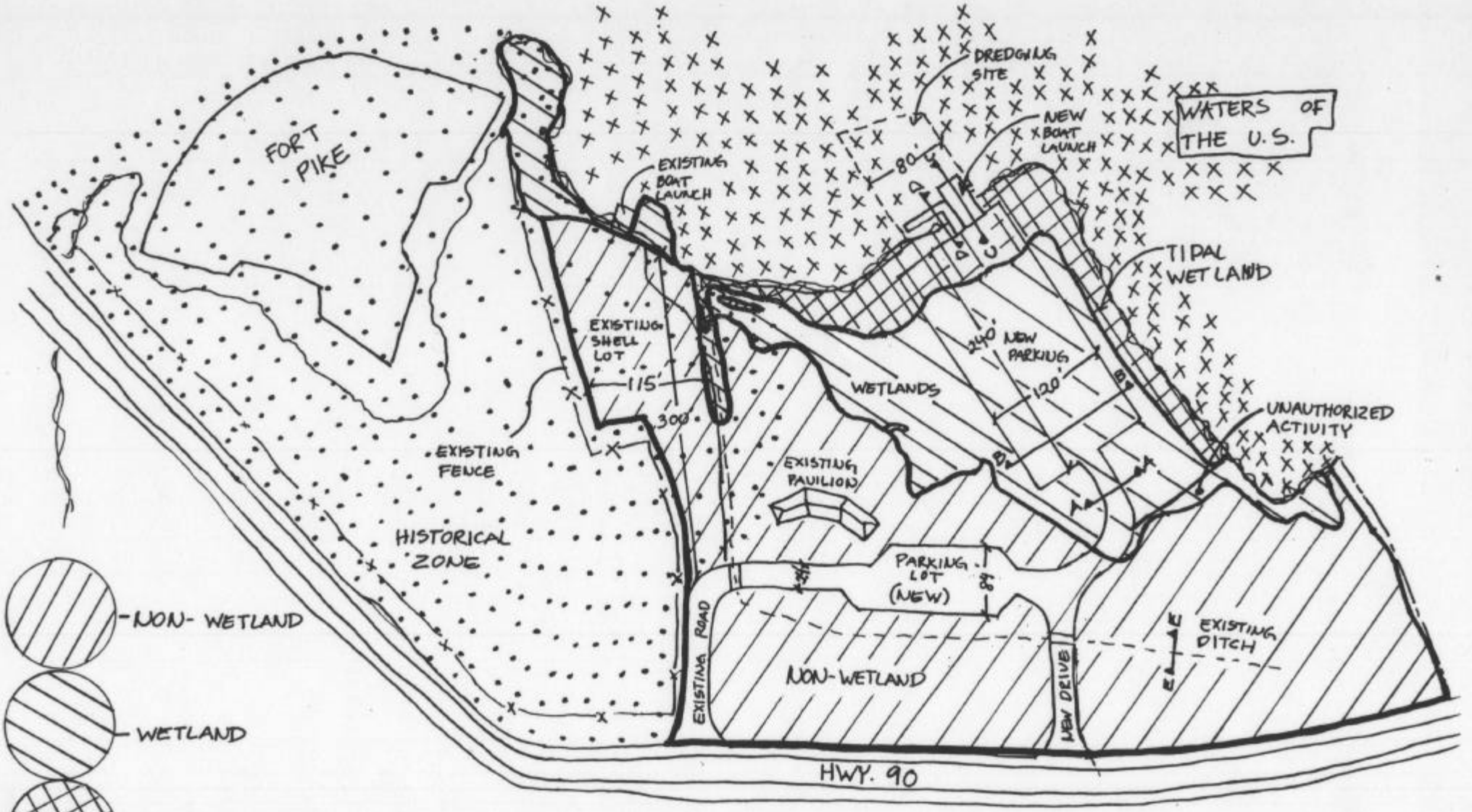

- NON- WETLAND
- WETLAND
- TIDAL WETLAND
- WATERS OF THE U.S.
- HISTORIC ZONE

FORT PIKE STATE HISTORIC SITE

REVISED 1-8-04

EGG. 20-020-1392-2

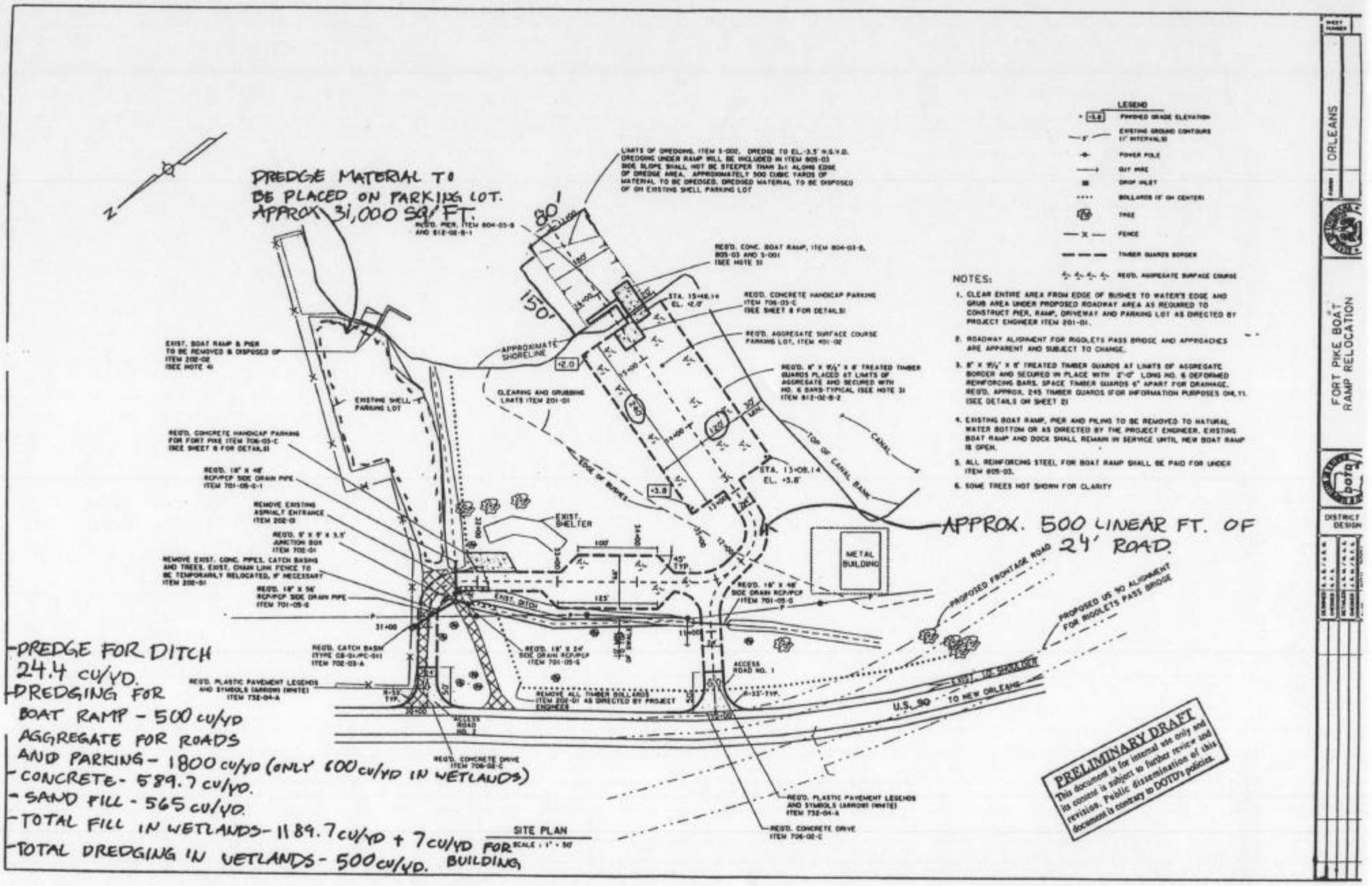

LEGEND

- FINISHED GRADE ELEVATION
- EXISTING GROUND CONTOURS (1' INTERVALS)
- POWER POLE
- GUY WIRE
- DROP INLET
- BOLLARDS (8' ON CENTER)
- TREE
- FENCE
- TIMBER GUARDS BORDER
- REQ'D. AGGREGATE SURFACE COURSE

NOTES:

1. CLEAR ENTIRE AREA FROM EDGE OF BUSHES TO WATER'S EDGE AND GRUB AREA UNDER PROPOSED ROADWAY AREA AS REQUIRED TO CONSTRUCT PIER, RAMP, DRIVEWAY AND PARKING LOT AS DIRECTED BY PROJECT ENGINEER ITEM 201-01.
2. ROADWAY ALIGNMENT FOR RIGOLETS PASS BRIDGE AND APPROACHES ARE APPARENT AND SUBJECT TO CHANGE.
3. 8" x 9½" x 8' TREATED TIMBER GUARDS AT LIMITS OF AGGREGATE BORDER AND SECURED IN PLACE WITH 2'-0" LONG NO. 6 DEFORMED REINFORCING BARS. SPACE TIMBER GUARDS 6" APART FOR DRAINAGE. REQ'D. APPROX. 245 TIMBER GUARDS (FOR INFORMATION PURPOSES ONLY) (SEE DETAILS ON SHEET 2)
4. EXISTING BOAT RAMP, PIER AND PILING TO BE REMOVED TO NATURAL WATER BOTTOM OR AS DIRECTED BY THE PROJECT ENGINEER. EXISTING BOAT RAMP AND DOCK SHALL REMAIN IN SERVICE UNTIL NEW BOAT RAMP IS OPEN.
5. ALL REINFORCING STEEL FOR BOAT RAMP SHALL BE PAID FOR UNDER ITEM 805-03.
6. SOME TREES NOT SHOWN FOR CLARITY

- DREDGE FOR DITCH 24.4 CU/YD.
- DREDGING FOR BOAT RAMP - 500 CU/YD
- AGGREGATE FOR ROADS AND PARKING - 1800 CU/YD (ONLY 600 CU/YD IN WETLANDS)
- CONCRETE - 589.7 CU/YD.
- SAND FILL - 565 CU/YD.
- TOTAL FILL IN WETLANDS - 1189.7 CU/YD + 7 CU/YD FOR BUILDING
- TOTAL DREDGING IN WETLANDS - 500 CU/YD.

ORLEANS

FORT PIKE BOAT RAMP RELOCATION

DISTRICT DESIGN

E66 20-020-1392-2

P 3 OF 6

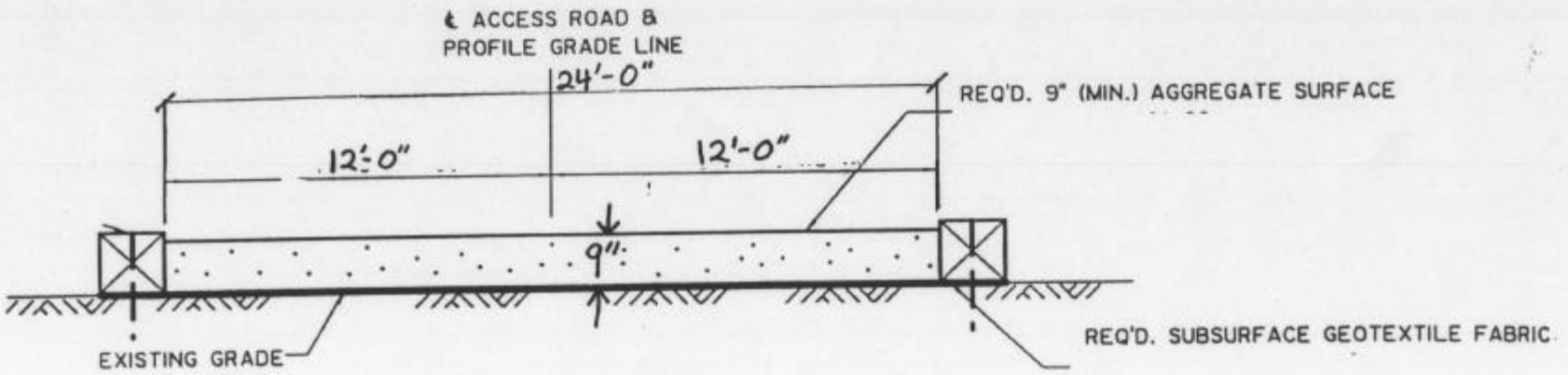

SECTION A-A

* APPROX. 100' OF ROAD IN WETLAND
THE REST IS NON-WET.

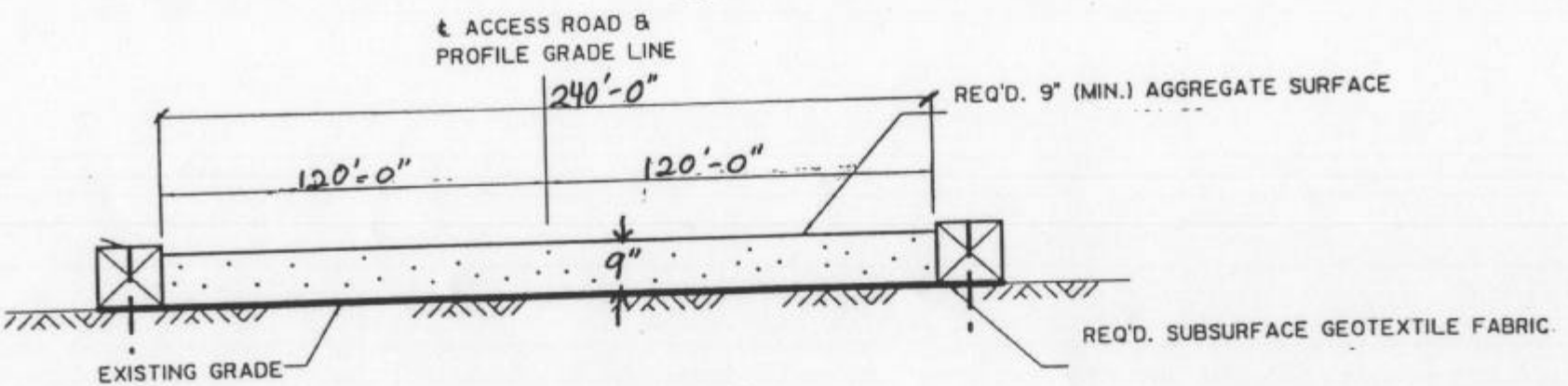

SECTION B-B

* 20' IN TIDAL WETLAND, THE
OTHER 220' IN WETLANDS.

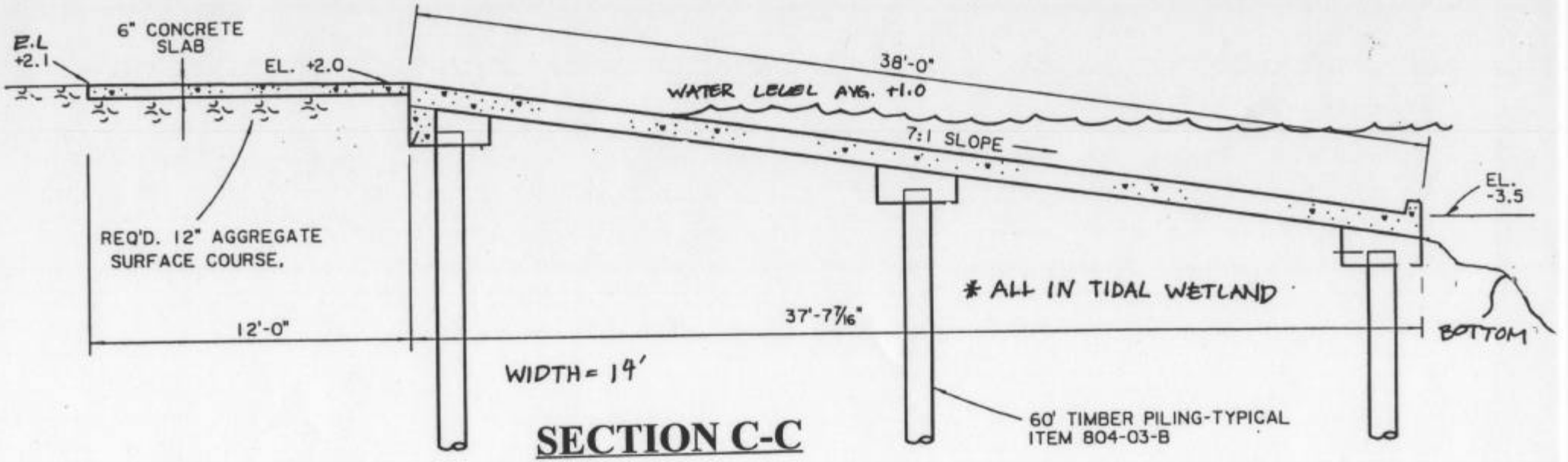

SECTION C-C

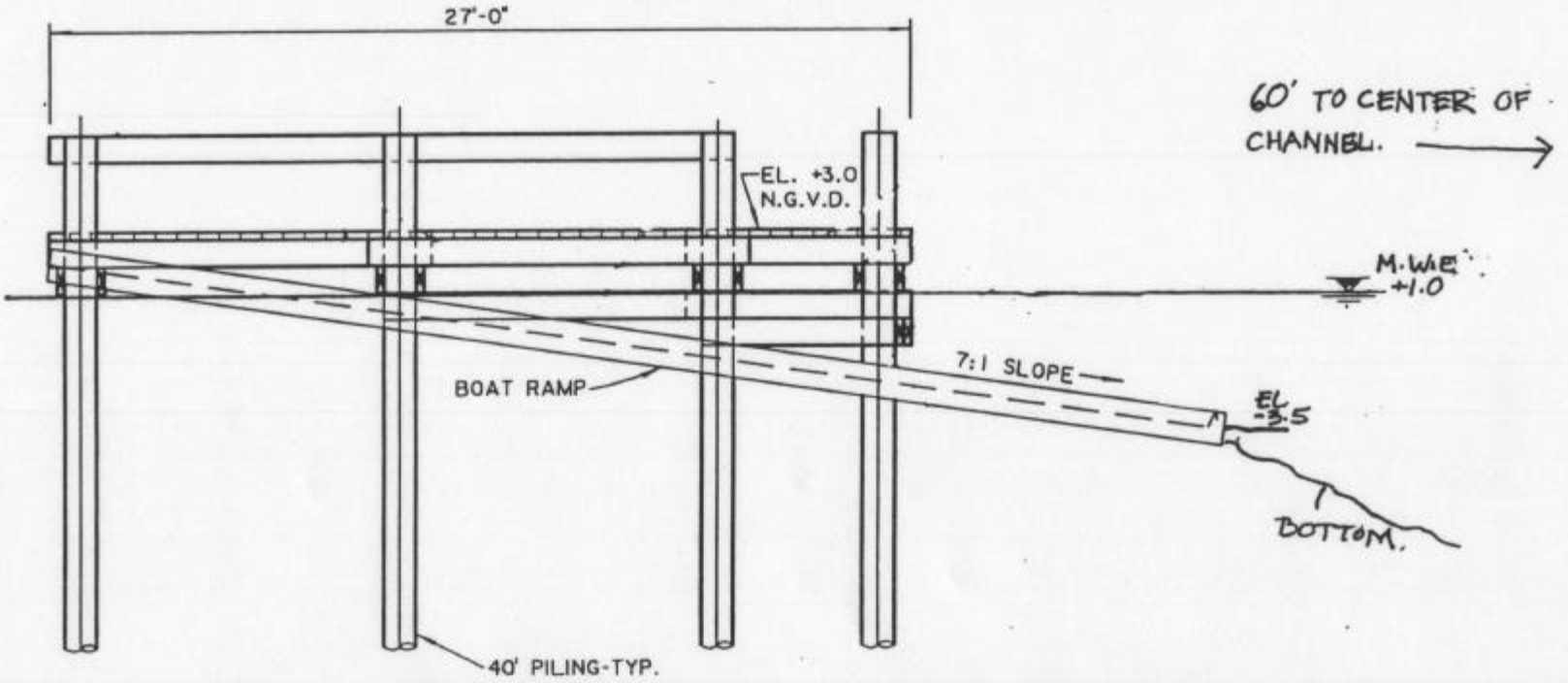

SECTION D-D

* ALL IN TIDAL

E66 20-020-1392-2

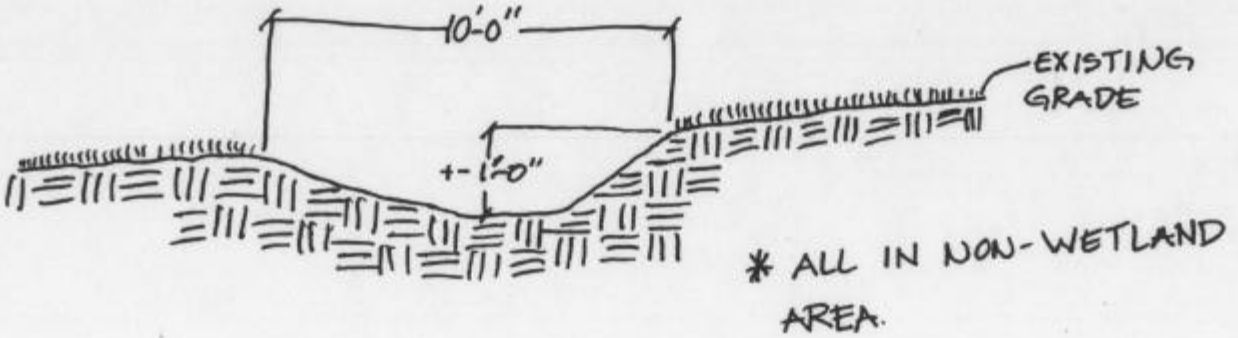

SECTION E-E