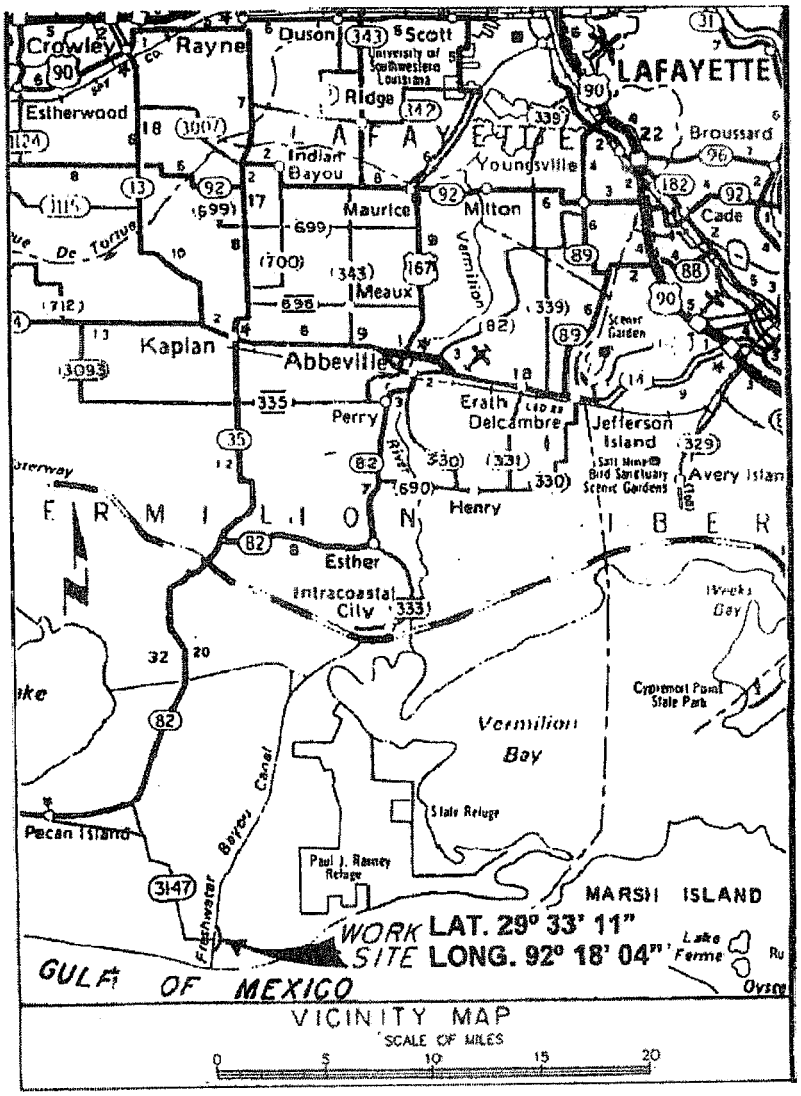

PROPOSED MAINTENANCE DREDGING FOR FRESHWATER BAYOU BY-PASS CHANNEL

ON FRESHWATER BAYOU CHANNEL
NEAR FRESHWATER BAYOU LOCKS
PARISH OF VERMILION, STATE OF LOUISIANA

Prepared by: *PRIMEAUX & ASSOCIATES, L.L.C.*
Consulting Engineers & Land Surveyors
Abbeville, Louisiana

APPLICATION BY: *ABBEVILLE HARBOR & TERMINAL DISTRICT*
P.O. BOX 1410
ABBEVILLE, LA 70511–1410

JOB 11–053

July 2012

SHEET 1 of 9

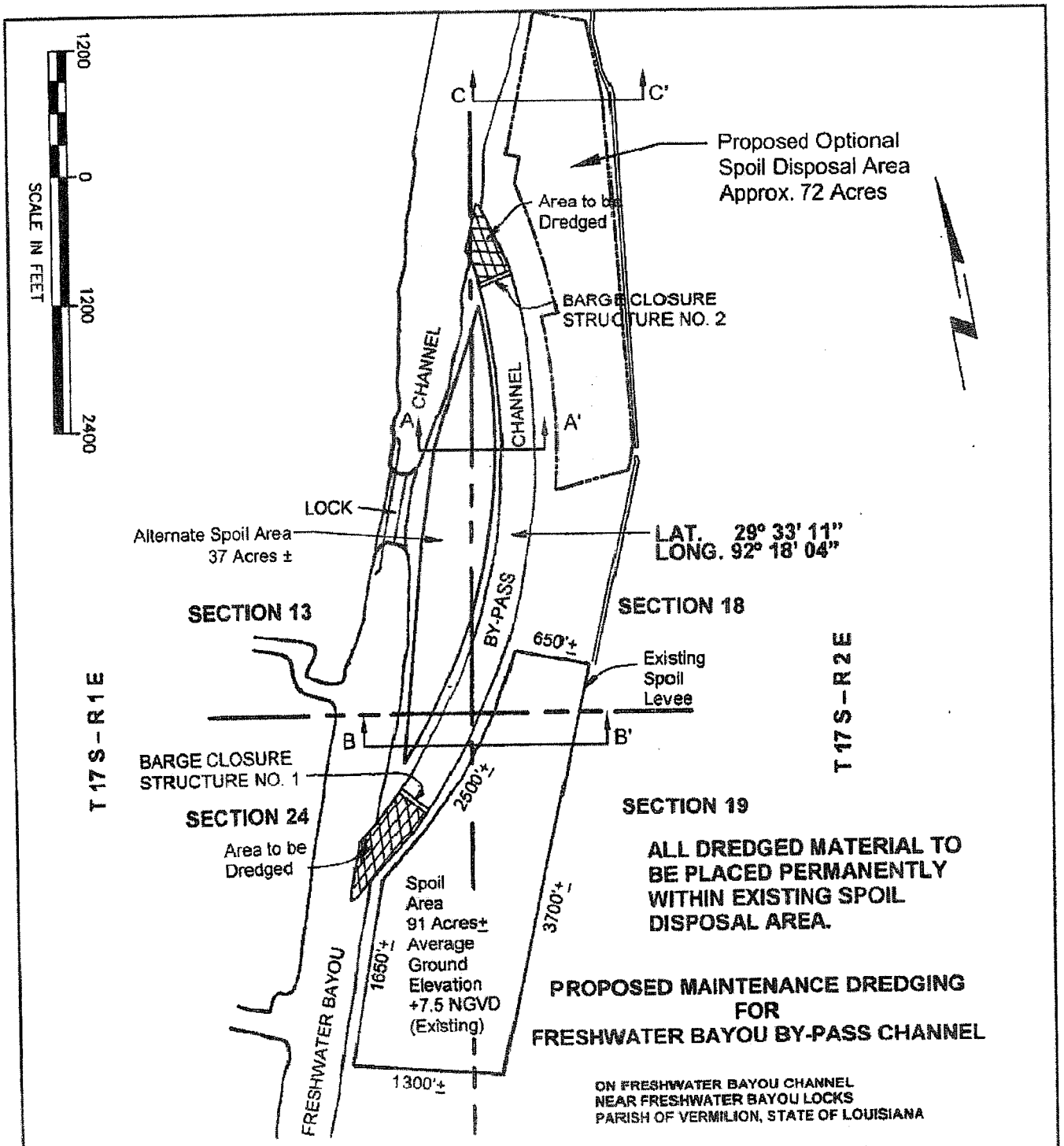
1200
0
1200
2400
SCALE IN FEET
C
C'
Proposed Optional
Spoil Disposal Area
Approx. 72 Acres
Area to be
Dredged
BARGE CLOSURE
STRUCTURE NO. 2
CHANNEL
CHANNEL
A
A'
LOCK
Alternate Spoil Area
37 Acres ±
LAT. 29° 33' 11"
LONG. 92° 18' 04"
SECTION 13
SECTION 18
BY-PASS
650'±
Existing
Spoil
Levee
T 17 S – R 1 E
T 17 S – R 2 E
B
B'
BARGE CLOSURE
STRUCTURE NO. 1
2500'±
SECTION 24
SECTION 19
Area to be
Dredged
ALL DREDGED MATERIAL TO
BE PLACED PERMANENTLY
WITHIN EXISTING SPOIL
DISPOSAL AREA.
Spoil
Area
91 Acres±
Average
Ground
Elevation
+7.5 NGVD
(Existing)
3700'±
1650'±
FRESHWATER BAYOU
1300'±
PROPOSED MAINTENANCE DREDGING
FOR
FRESHWATER BAYOU BY-PASS CHANNEL
ON FRESHWATER BAYOU CHANNEL
NEAR FRESHWATER BAYOU LOCKS
PARISH OF VERMILION, STATE OF LOUISIANA
Prepared by: PRIMEAUX & ASSOCIATES, L.L.C.
Consulting Engineers & Land Surveyors
Abbeville, Louisiana
JOB 11-053
July 2012
APPLICATION BY: ABBEVILLE HARBOR
& TERMINAL DISTRICT
P.O. BOX 1410
ABBEVILLE, LA 70511-1410
SHEET 2 of 9

CURVE DATA					
POINTS	DELTA	RADIUS	ARC	CHORD	TAN
[illegible]	[illegible]	[illegible]	[illegible]	[illegible]	[illegible]

LAMBERT COORDINATES LOUISIANA SOUTH ZONE		
POINTS	Y	X
[illegible]	[illegible]	[illegible]

CORPS OF ENGINEERS STATIONS	
POINTS	STATION
[illegible]	[illegible]

REQUIRED RIGHTS-OF-WAY AND SPOIL DISPOSAL AREAS		
TRACT NO.	FEE TITLE OWNER	ACREAGE
[illegible]	[illegible]	[illegible]

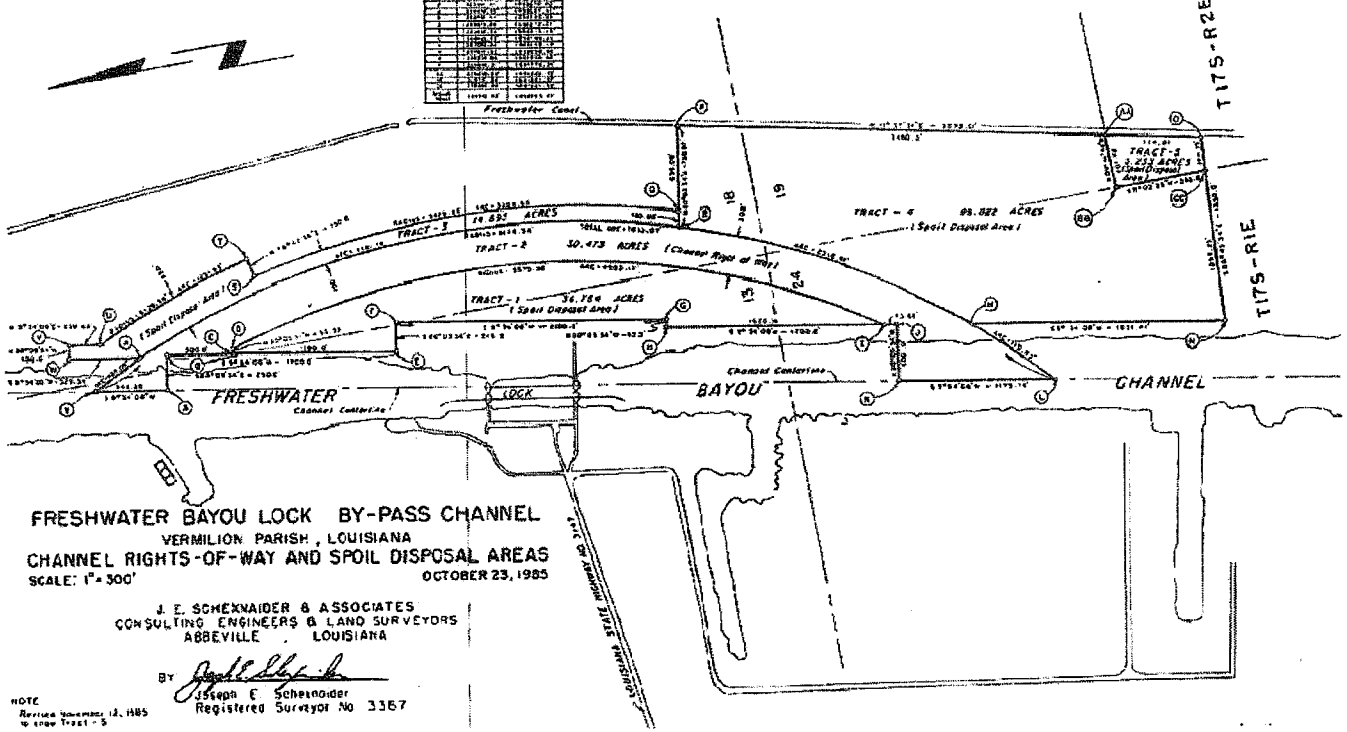

FRESHWATER BAYOU LOCK BY-PASS CHANNEL
VERMILION PARISH, LOUISIANA
CHANNEL RIGHTS-OF-WAY AND SPOIL DISPOSAL AREAS
SCALE: 1" = 300'
OCTOBER 23, 1985

J. E. SCHEXNAIDER & ASSOCIATES
CONSULTING ENGINEERS & LAND SURVEYORS
ABBEVILLE, LOUISIANA

BY Joseph E. Schexnaider
Joseph E. Schexnaider
Registered Surveyor No. 3367

NOTE
Revised November 12, 1985 to show Tract - 5

1200 0 1200 2400
SCALE IN FEET

Prepared by: PRIMEAUX & ASSOCIATES, L.L.C.
Consulting Engineers & Land Surveyors
Abbeville, Louisiana

APPLICATION BY: ABBEVILLE HARBOR & TERMINAL DISTRICT
P.O. BOX 1410
ABBEVILLE, LA 70511-1410

JOB 11-053

July 2012

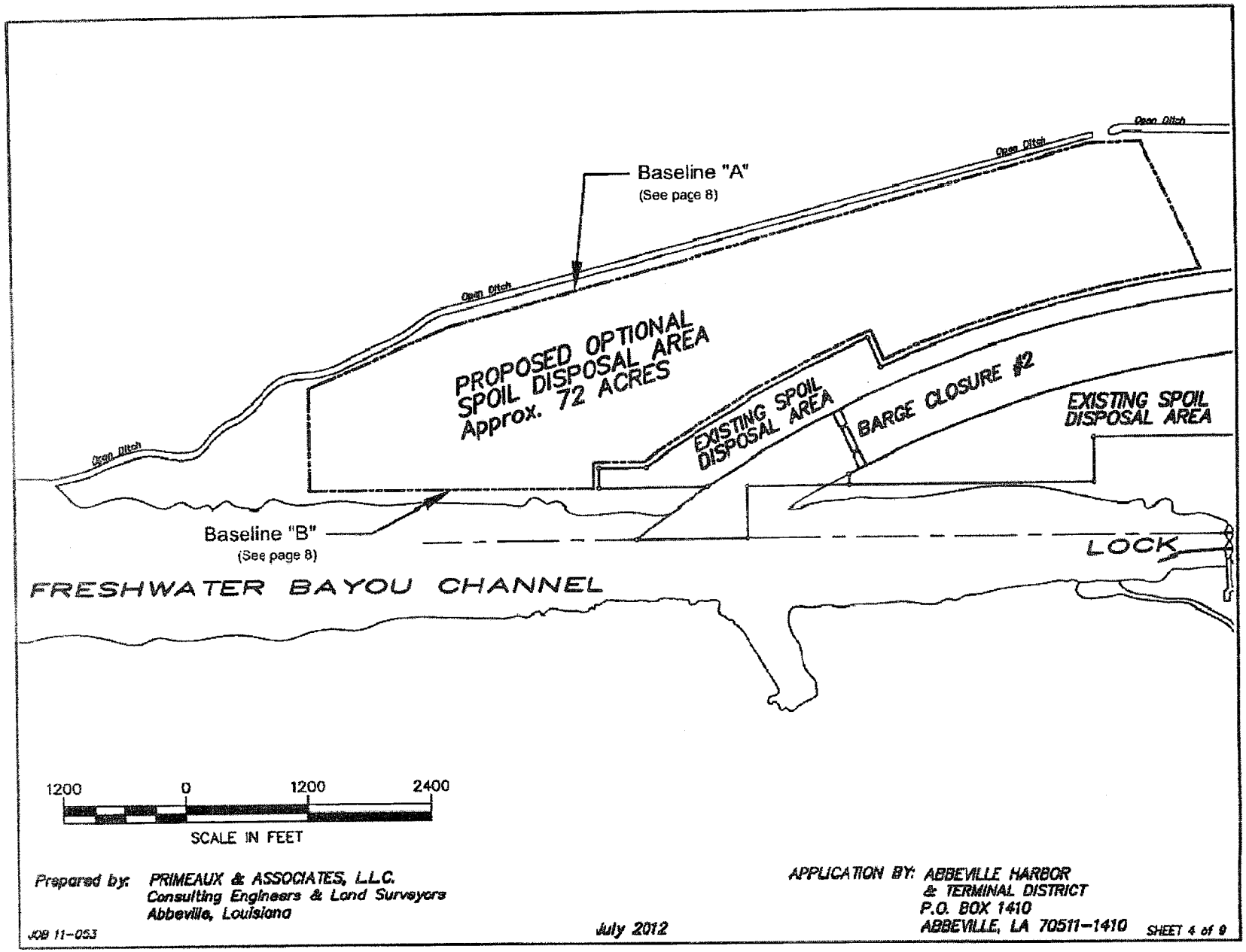

Prepared by: PRIMEAUX & ASSOCIATES, L.L.C.
Consulting Engineers & Land Surveyors
Abbeville, Louisiana

APPLICATION BY: ABBEVILLE HARBOR
& TERMINAL DISTRICT
P.O. BOX 1410
ABBEVILLE, LA 70511-1410

JOB 11-053

July 2012

SHEET 4 of 9

TYPICAL SECTION
NORTH SITE

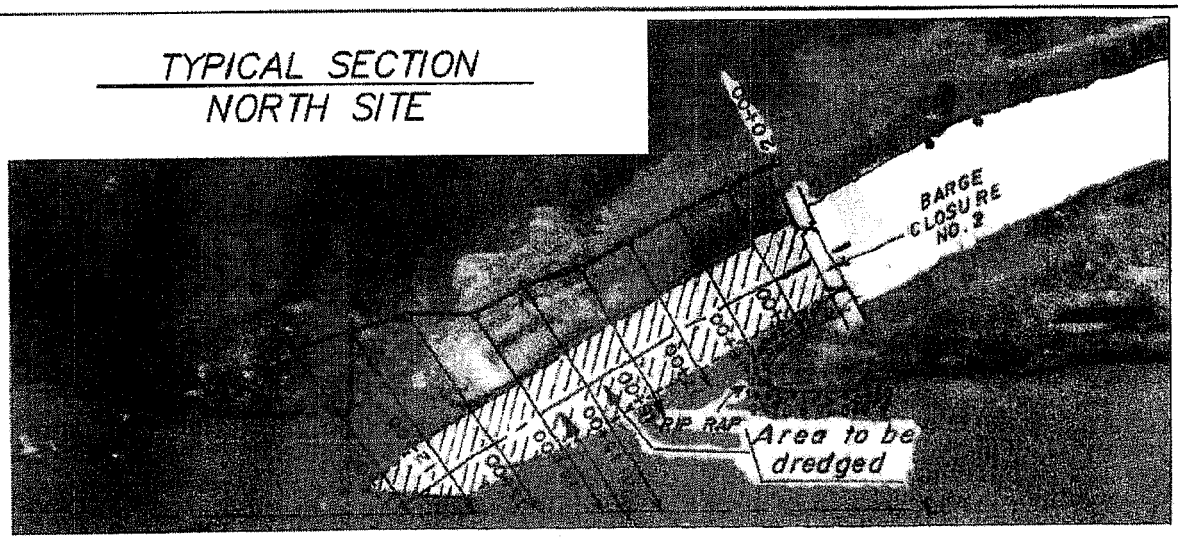

300 0 300 600

SCALE IN FEET

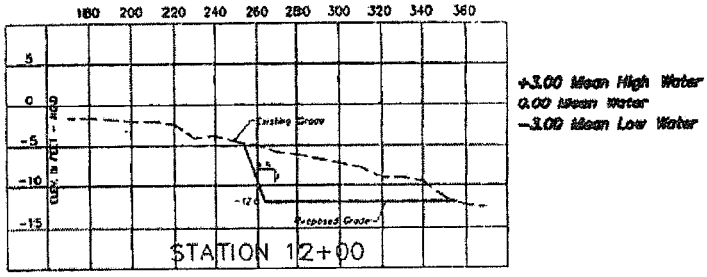

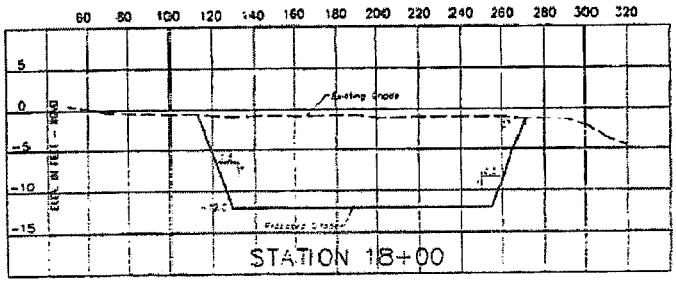

PROPOSED MAINTENANCE DREDGING
FOR
FRESHWATER BAYOU BY-PASS CHANNEL

TOTAL AMOUNT OF DREDGED MATERIAL=101,000 CUBIC YARDS

ON FRESHWATER BAYOU CHANNEL
NEAR FRESHWATER BAYOU LOCKS
PARISH OF VERMILION, STATE OF LOUISIANA

Prepared by: *PRIMEAUX & ASSOCIATES, L.L.C.*
Consulting Engineers & Land Surveyors
Abbeville, Louisiana

APPLICATION BY: *ABBEVILLE HARBOR & TERMINAL DISTRICT*
P.O. BOX 1410
ABBEVILLE, LA 70511-1410

JOB 11-053

July 2012

SHEET 5 of 9

TYPICAL SECTION
SOUTH SITE

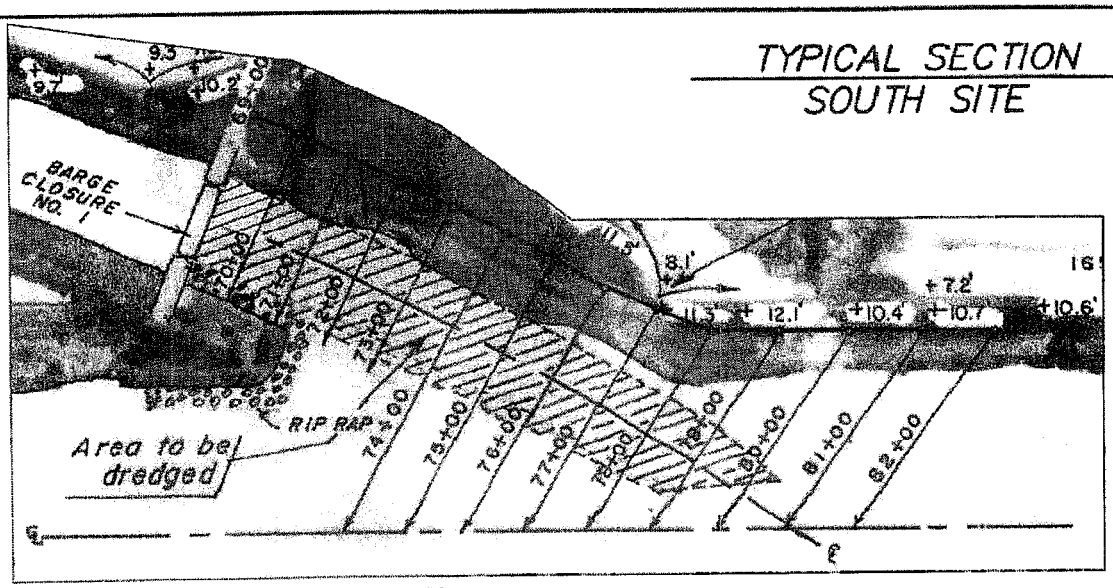

300 0 300 600

SCALE IN FEET

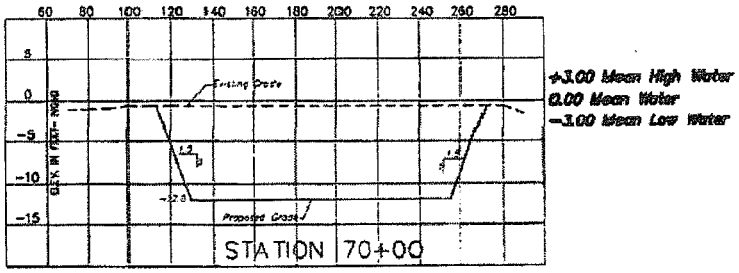

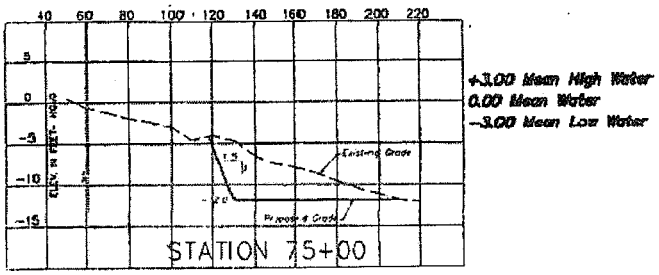

PROPOSED MAINTENANCE DREDGING
FOR
FRESHWATER BAYOU BY-PASS CHANNEL

TOTAL AMOUNT OF DREDGED MATERIAL=101,000 CUBIC YARDS

ON FRESHWATER BAYOU CHANNEL
NEAR FRESHWATER BAYOU LOCKS
PARISH OF VERMILION, STATE OF LOUISIANA

Prepared by: *PRIMEAUX & ASSOCIATES, L.L.C.*
Consulting Engineers & Land Surveyors
Abbeville, Louisiana

APPLICATION BY: ABBEVILLE HARBOR & TERMINAL DISTRICT
P.O. BOX 1410
ABBEVILLE, LA 70511-1410

JOB 11-053

July 2012

SHEET 6 of 9

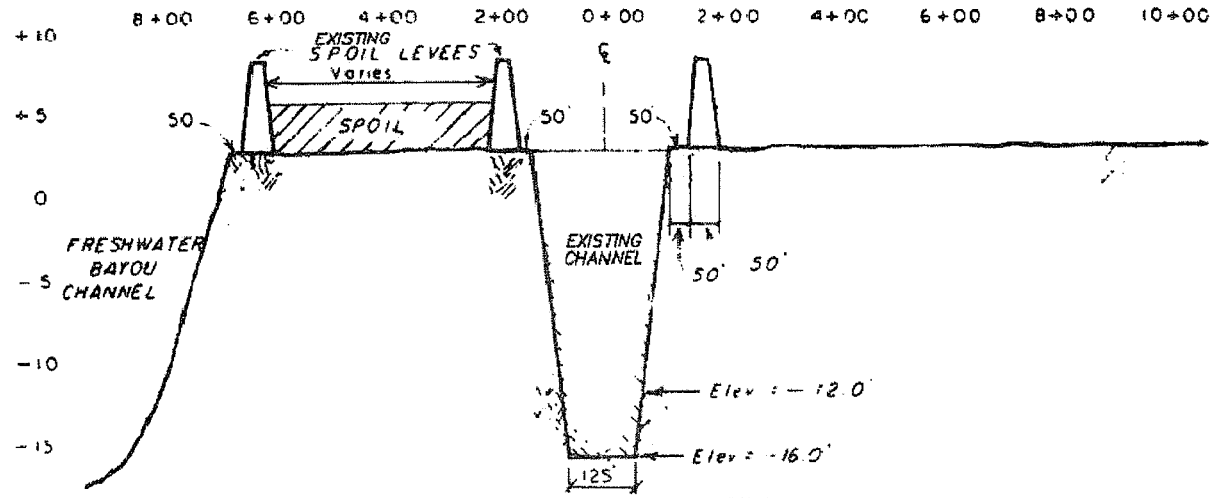

SECTION A-A'

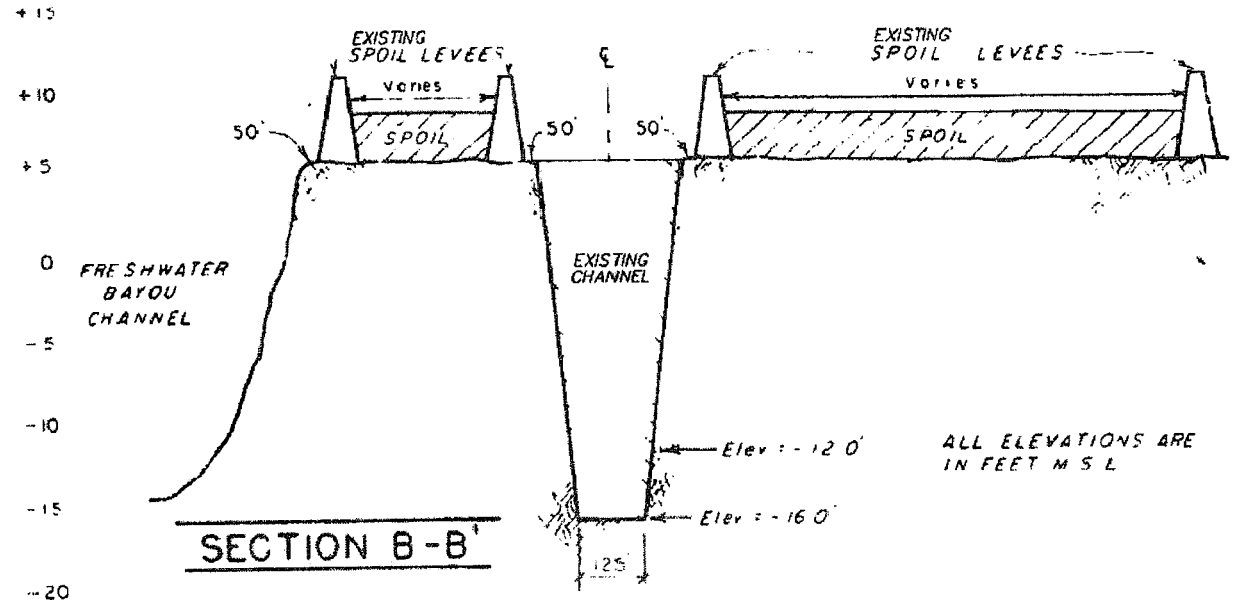

SECTION B-B'

ALL ELEVATIONS ARE IN FEET M S L

SCALES OF FEET FOR BOTH SECTIONS

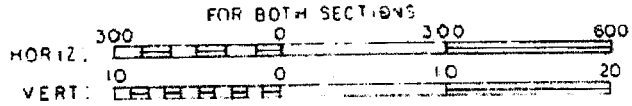

TYPICAL SECTION
SPOIL AREA

Prepared by: PRIMEAUX & ASSOCIATES, L.L.C.
Consulting Engineers & Land Surveyors
Abbeville, Louisiana

APPLICATION BY: ABBEVILLE HARBOR & TERMINAL DISTRICT
P.O. BOX 1410
ABBEVILLE, LA 70511-1410

JOB 11-053

July 2012

SHEET 7 of 9

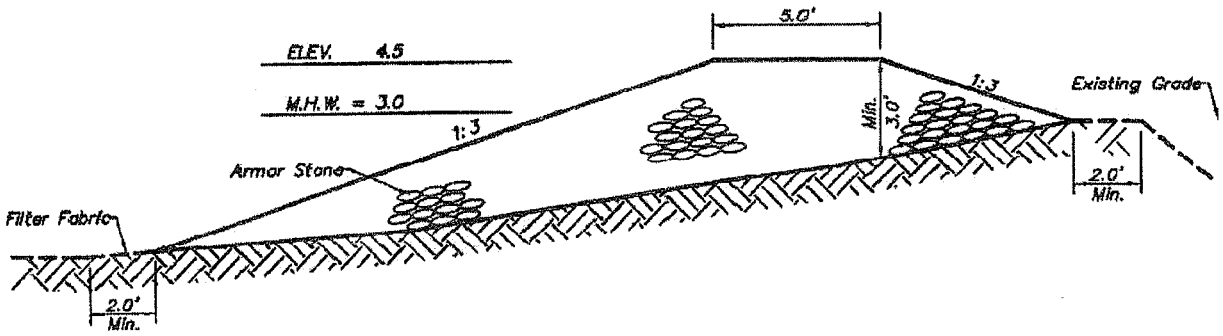

TYPICAL SECTION BASELINE "A"

Not To Scale

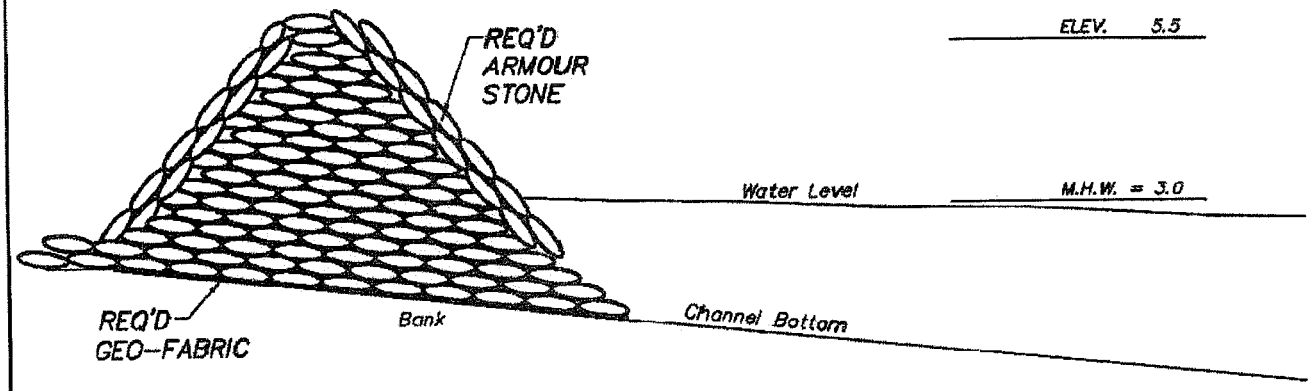

TYPICAL SECTION BASELINE "B"

FOR PLACING ARMOUR STONE- FRESHWATER BAYOU CHANNEL

Not To Scale

TYPICAL SECTION

OPTIONAL SPOIL AREA

Prepared by: PRIMEAUX & ASSOCIATES, L.L.C.
Consulting Engineers & Land Surveyors
Abbeville, Louisiana

APPLICATION BY: ABBEVILLE HARBOR
& TERMINAL DISTRICT
P.O. BOX 1410
ABBEVILLE, LA 70511-1410

JOB 11-053

July 2012

SHEET 8 of 9

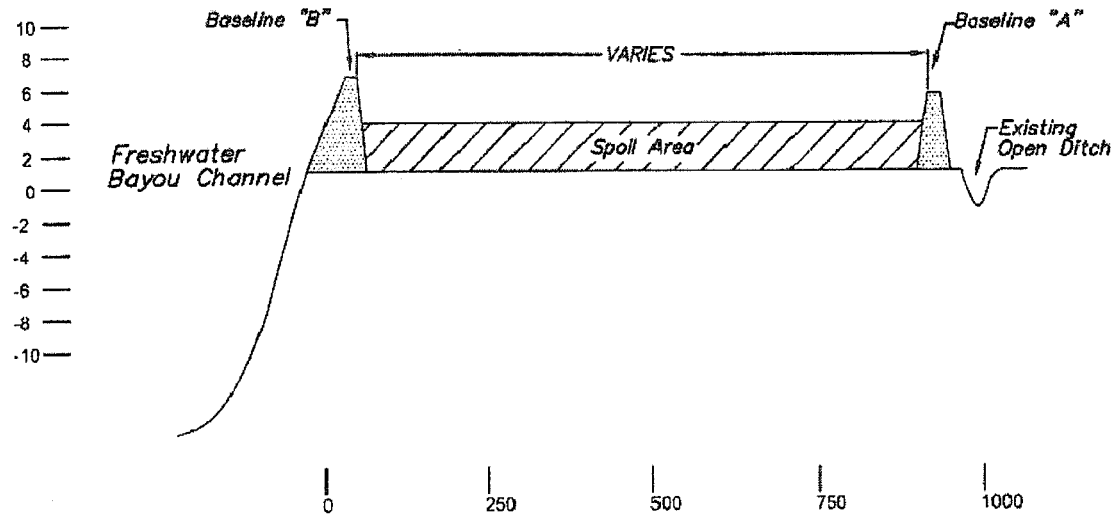

SECTION C–C'

TYPICAL SECTION
OPTIONAL SPOIL AREA

Prepared by: PRIMEAUX & ASSOCIATES, L.L.C.
Consulting Engineers & Land Surveyors
Abbeville, Louisiana

APPLICATION BY: ABBEVILLE HARBOR
& TERMINAL DISTRICT
P.O. BOX 1410
ABBEVILLE, LA 70511–1410

JOB 11–053

July 2012

SHEET 9 of 9