DESCRIPTION: Specify Alternate High Density Synthetic for Lock Wall Armor

ORIGINAL DESIGN:

The designed specified steel wall armor with anchors for the lock chamber walls. Corner steel armor is also specified. (See Drawings Nos 1, 2, & 3). The intent of the original design is to function as an impact attenuator.

PROPOSED DESIGN:

Substitute high density synthetic (plastic) for the steel wall armor plate for the lock walls. (See Information in Appendix E)

ADVANTAGES:

1. Durability and low maintenance costs.
2. Minimal impediment to marine traffic when replacement armor is required.

DISADVANTAGES:

None

JUSTIFICATION:

Lower life cycle maintenance costs.

NOTE: There is no item in the current estimate for structural steel or wall armor in the lock structure. The estimate is a cost comparison based on quantities and relative costs used in similar lock designs.

DRAWING NO. 1

These details are according to INCA Drawings S-24/25

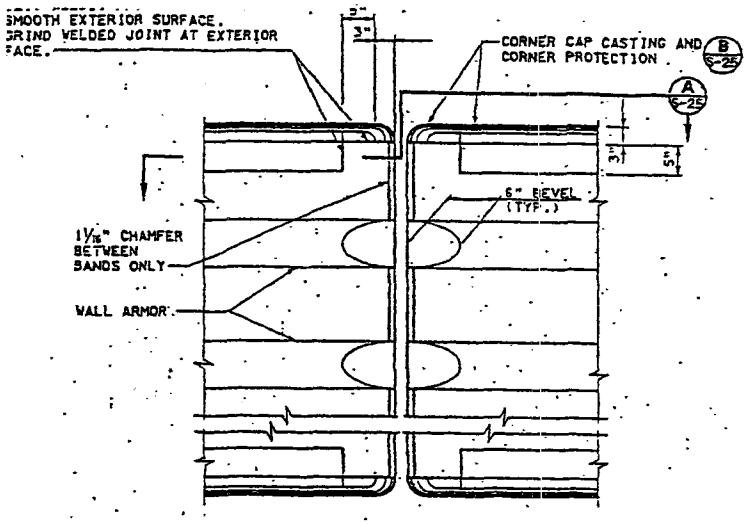

(WALL ELEVATION AT BEAM JOINT)

TYPICAL WALL ARMOR TERMINATION

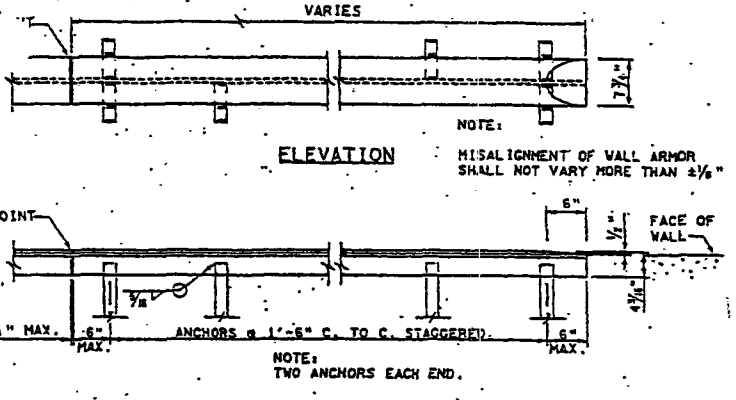

ELEVATION

NOTE:
MISALIGNMENT OF WALL ARMOR SHALL NOT VARY MORE THAN ±1/8"

CHAMFER END

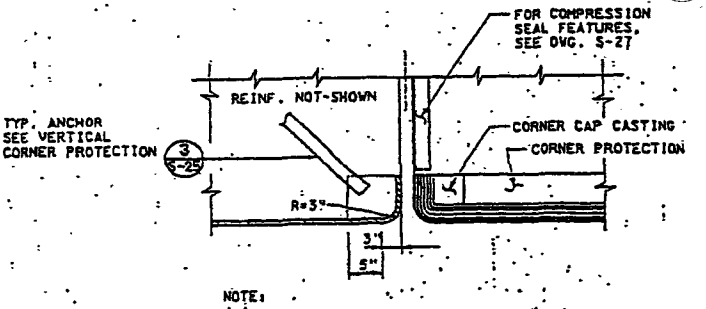

NOTE:
FOR LADDER RECESS DETAIL, SEE SHEET S-17.

SECTION/PLAN

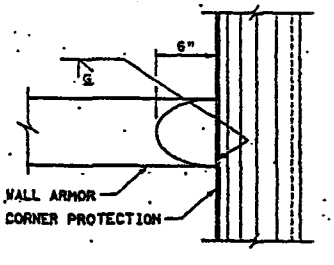

NOTE:
MISALIGNMENT OF WALL ARMOR TO CORNER PROTECTION SHALL NOT VARY MORE THAN ± 1/8"

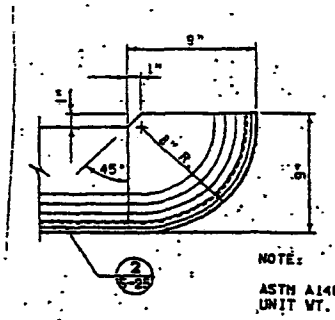

PLAN

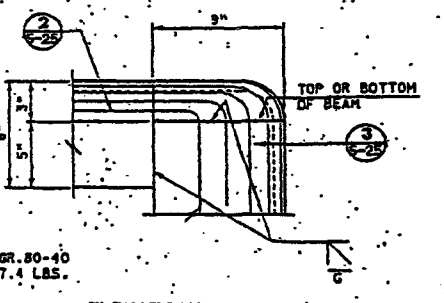

NOTE:
ASTM A148 GR.80-40
UNIT WT. 17.4 LBS.

ELEVATION

NOT TO SCALE

DRAWING NO. 2

These details are according to INCA Drawings S-24/25

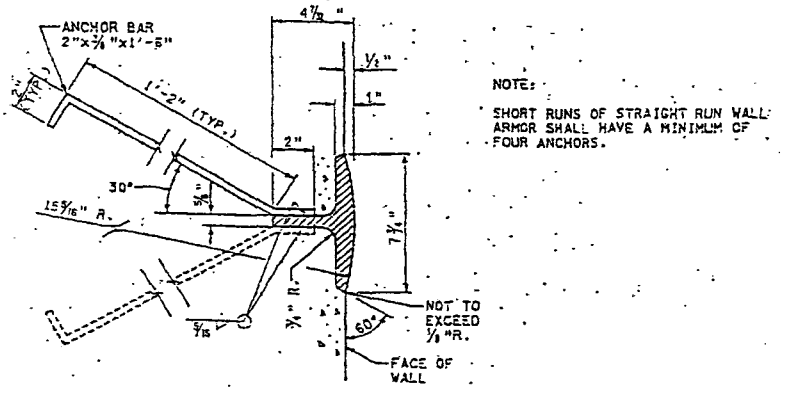

SECTION

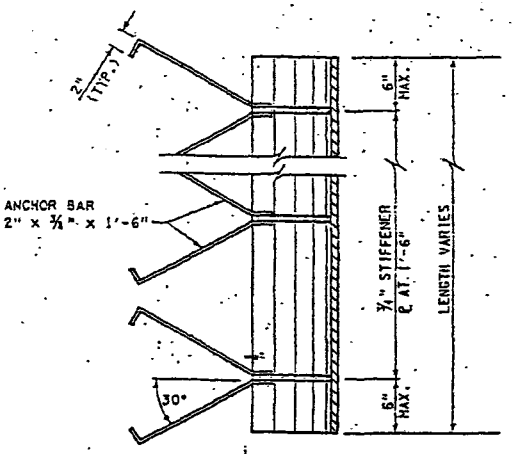

ELEVATION

NOT TO SCALE

DRAWING NO. 3

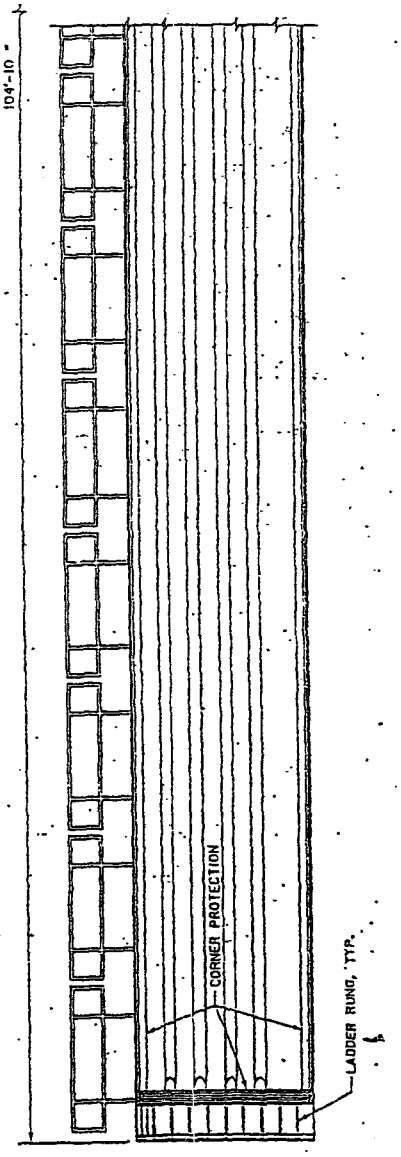

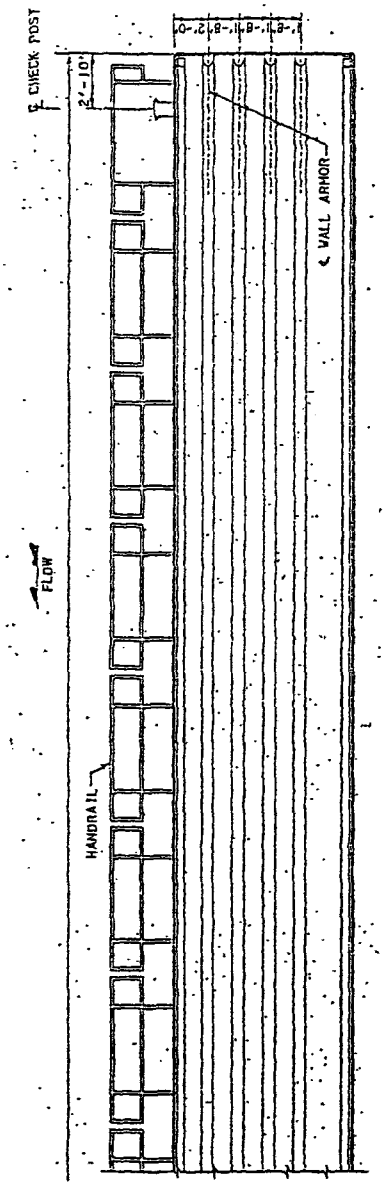

These details are according to INCA Drawings S-24/25

	COST ESTIMATE WORKSHEET				
	PROPOSAL NO.: S-3				PAGE 5 OF 5
	DELETIONS				
	ITEM	UNITS	QUANTITY	UNIT COST	TOTAL
	Structural Steel	LBS	2,550,000	$1.13	$2,881,500
	Sandblasting	FT	15,450	$1.88	$29,046
	Painting	FT	463,503	$0.58	$268,832
			Total Deletions		$3,179,378
	ADDITIONS				
	ITEM	UNITS	QUANTITY	UNIT COST	TOTAL
**	Laminated Fender System 5 Section Panel	LF	14,400	$8.75	$126,000
	Anchorage Inserts	EA	5,000	$32.40	$162,000
	Stainless Steel Bolts	EA	5,000	$12.60	$63,000
			Total Additions		$351,000
			Net Savings		$2,828,378
		*	Markups	25.00%	$707,094
			Total Savings		$3,535,472
*	Markups include: Contingency; Escalation; Engineering/Design; and SIOH				
**	Linear feet of rubbing surface, both sides of 1200' lock, six strips per side 1200 x 2 x 6 = 14,400 LF				
	Assume bolts at 3' O.C. 14,400 = 4,800, use 5,000				
	3				