North

Vicinity Map – Zoom Out
Vial Canal – St. Charles Parish, Louisiana

Northeast Start of Canal:	Lat: 29° 56'50.23"; Long: -90° 25'14.42"
Southwest End of Canal:	Lat: 29° 56'06.04"; Long: -90° 26'39.65"
(Ends at 80 Arpent Canal)	
Intersection @ LA-3127:	Lat: 29° 56'36.70"; Long: -90° 25'39.41"

North

Vicinity Map – Zoom In
Vial Canal – St. Charles Parish, Louisiana

Northeast Start of Canal:	Lat: 29° 56'50.23"; Long: -90° 25'14.42"
Southwest End of Canal:	Lat: 29° 56'06.04"; Long: -90° 26'39.65"
(Ends at 80 Arpent Canal)	
Intersection @ LA-3127:	Lat: 29° 56'36.70"; Long: -90° 25'39.41"

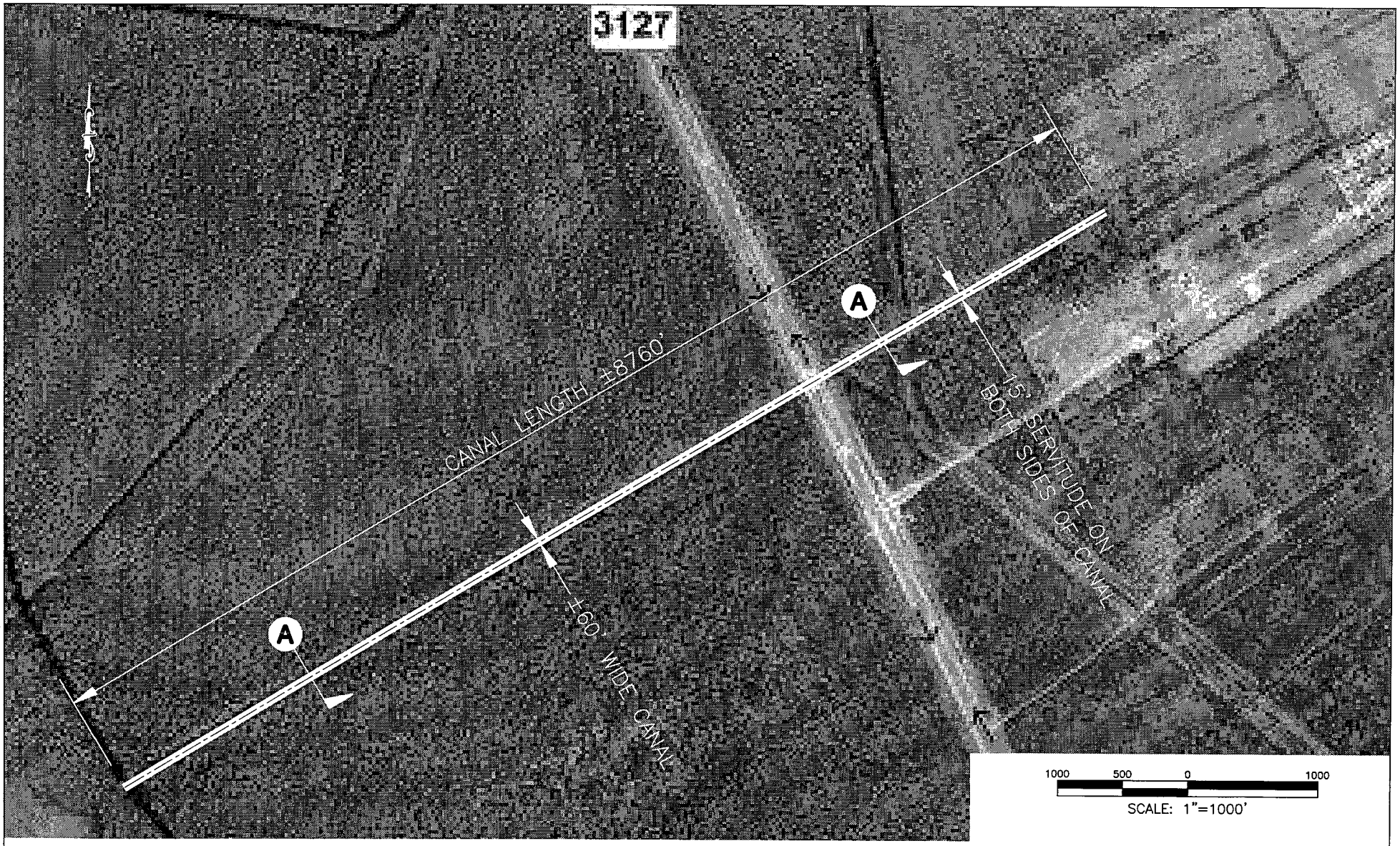

NOTE:
PERMIT DRAWING ONLY, ALL ENGINEERING DONE BY ST. CHARLES PARISH DEPT OF PUBLIC WORKS.

LEGEND

LOCATION OF CANAL

Louisiana One Call before you dig. 1-800-272-3020

Note: "Prior to construction, the contractor will verify all utilities." If a conflict exist, notify the project engineer/architect.

DATE	DESCRIPTION	NO.
	REVISIONS	

VIAL CANAL CLEANING

ST. CHARLES PARISH, LOUISIANA

PLAN VIEW

DATE: 1/23/13	PLOT SCALE: 1"=1000'	DRAWING NO. 1 OF 2
DESIGNED BY: D.J.H.	DRAWN BY: I.S.B.	
CHECKED BY: D.J.H.	CHECKED BY: D.J.H.	APPROVED BY: D.J.H.

\\Dannypc\c\My Documents\SCP Permitting Projects\Vial Canal Cleaning 2013\PLAN VIEW OF Vial Canal.dwg, 3/4/2013 2:33:58 PM

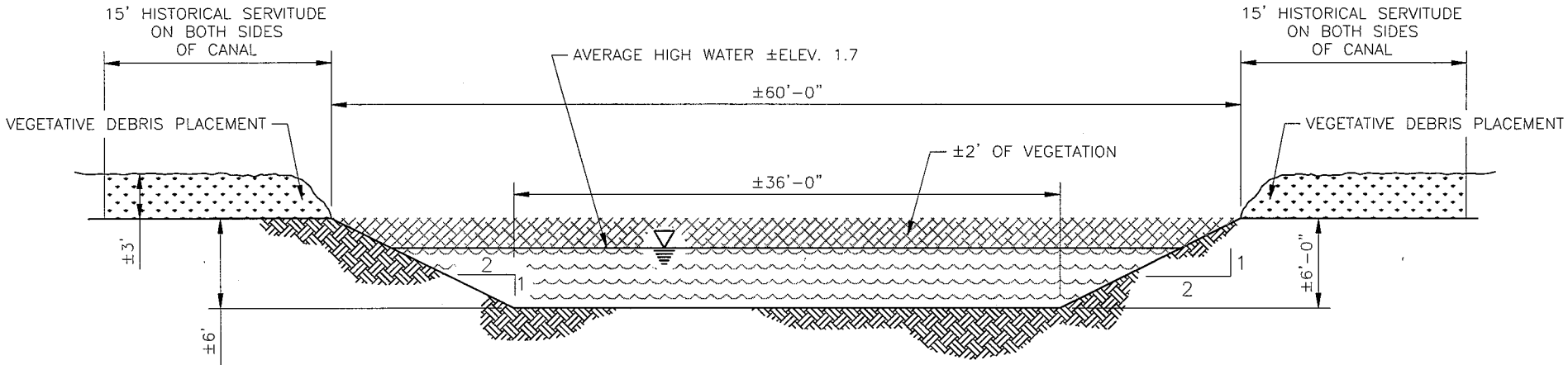

SECTION A

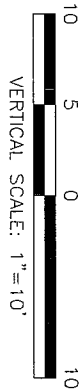

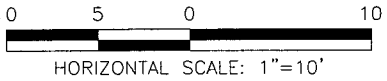

NOTE:
PERMIT DRAWING ONLY, ALL ENGINEERING DONE BY ST. CHARLES PARISH DEPT OF PUBLIC WORKS.

Louisiana One Call 1-800-272-3020 before you dig.

Note: "Prior to construction, the contractor will verify all utilities." If a conflict exist, notify the project engineer/architect.

DATE	DESCRIPTION	NO.
	REVISIONS	

VIAL CANAL CLEANING

ST. CHARLES PARISH, LOUISIANA

TYPICAL CROSS SECTIONS

DATE: 1/23/13	PLOT SCALE: 1"=10'	DRAWING NO. 2 OF 2
DESIGNED BY: D.J.H.	DRAWN BY: I.S.B.	
CHECKED BY: D.J.H.	CHECKED BY: D.J.H.	APPROVED BY: D.J.H.

\\Dannypc\c\My Documents\SCP Permitting Projects\Vial Canal Cleaning 2013\PLAN VIEW OF Vial Canal.dwg, 3/4/2013 2:34:19 PM

Vegetative Debris Removal Calculations - Vial Canal

Area No.	Area (Acres) Acres	Area (s.f.) Square Feet	Excavated Material (c.y) Native Sediment	Excavated Material (c.y.) Vegetative Debris
Year 1	12.0661157	525600	0	38933
Year 2	12.0661157	525600	0	3893
Year 3	12.0661157	525600	0	3893
Year 4	12.0661157	525600	0	3893
Year 5	12.0661157	525600	0	3893
Excavated Vegetation Totals	12.066	525600	0	54507

Note: Vegetative Removal & Fallen Tree Removal will be placed along the existing 15' bank servitude on both sides alternating. Please note that no soils will be removed & years 2 through 5 will be roughly 10% each year of the original cleaning as an estimate.