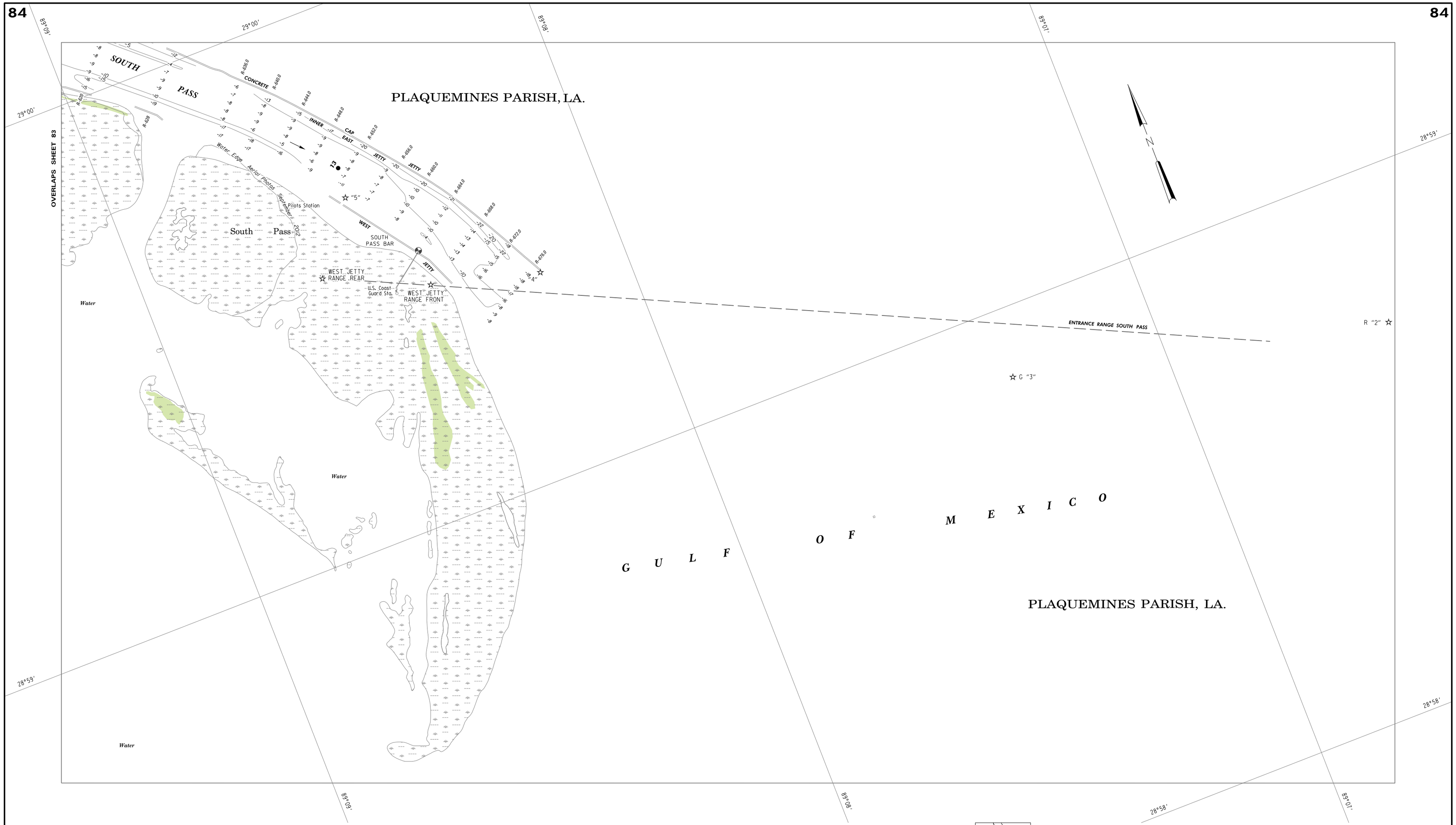

All elevations are expressed in feet and refer to North American Vertical Datum of 1988.
Contours below Low Water Reference Plane are expressed in feet at 5 and 10 ft. intervals.
Contours above Low Water Reference Plane are expressed in feet at 5 ft. intervals.
Planimetry from aerial photographs flown January 2002.
● Distances on Mississippi River above Head of Passes are shown at 1 mile intervals, 1962 survey.
Projection ..... Lambert Conformal Conic
Horizontal Datum ..... North American Datum 1983 (NAD 83)
Ellipsoid ..... GRS 80
L.W.R.P. - Low Water Reference Plane.

SCALE 1:10,000

FEET: 500 0 500 1000 1500
METERS: 100 0 100 200 300 400 500
MILES: 0 1/8 1/4 3/8 1/2

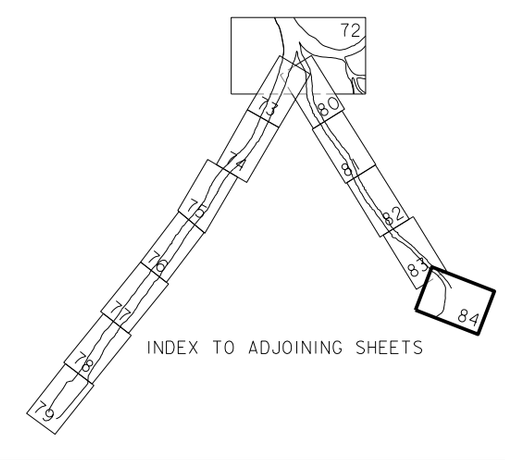

INDEX TO ADJOINING SHEETS

MISSISSIPPI RIVER

HYDROGRAPHIC SURVEY 2013

BLACK HAWK, LA TO HEAD OF PASSES, LA
ALSO SOUTHWEST, SOUTH, AND PASS A LOUTRE.

IN 86 SHEETS

U.S. ARMY ENGINEER DISTRICT, NEW ORLEANS.
CORPS OF ENGINEERS

FILE NO. H-5-47753