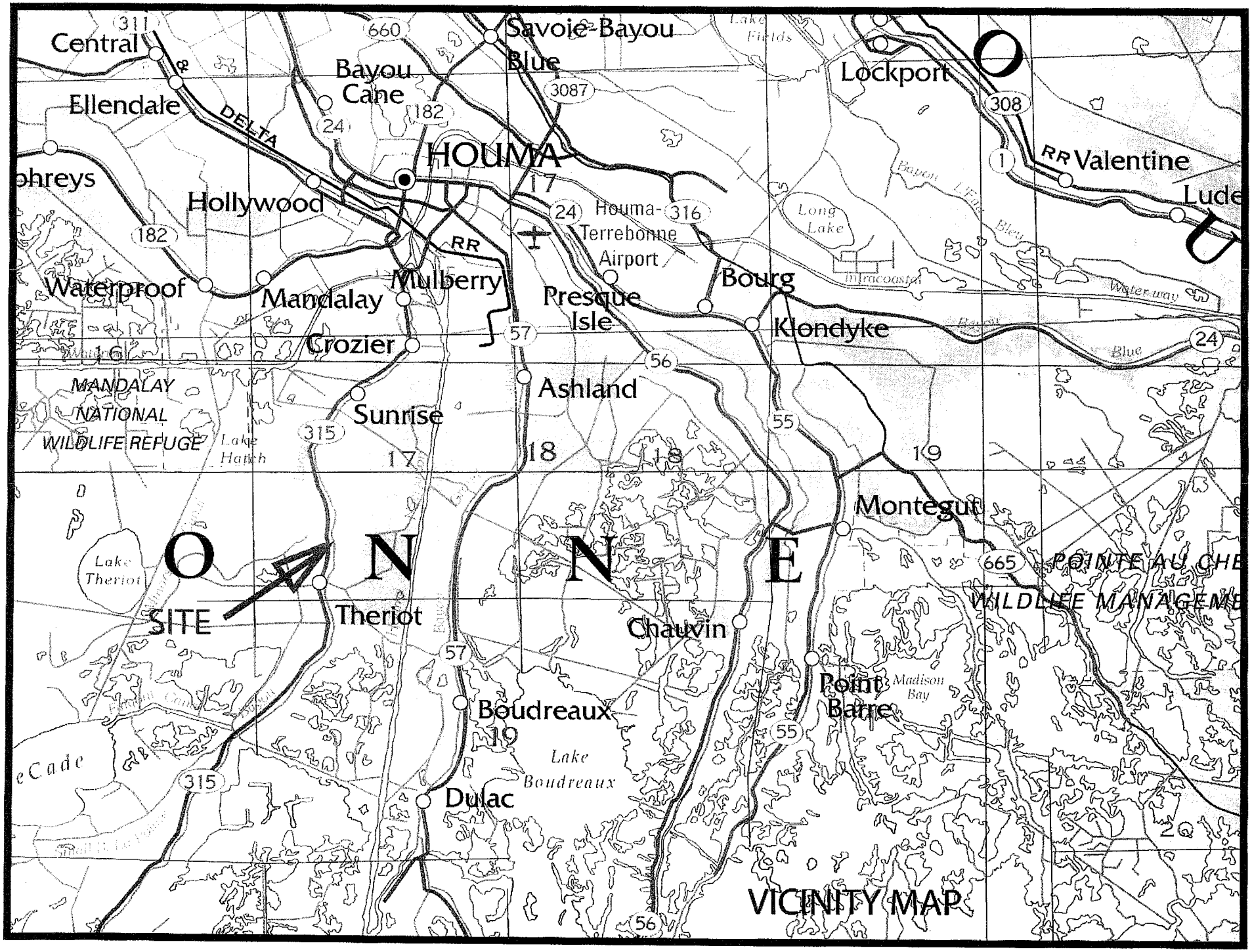
Central
Ellendale
DELTA
Bayou Cane
Savoie-Bayou Blue
HOUMA
Lockport
Valentine
Hollywood
Houma-Terrebonne Airport
Waterproof
Mandalay
Mulberry
Presque Isle
Bourg
Klondyke
Crozier
Ashland
Sunrise
MANDALAY NATIONAL WILDLIFE REFUGE
Lake Hatch
Long Lake
Montegut
POINTE AU CHE
WILDLIFE MANAGEME
O N N E
SITE
Theriot
Lake Theriot
Chauvin
Point Barre
Madison Bay
Boudreaux
Lake Boudreaux
Dulac
VICINITY MAP

UNITED STATES
DEPARTMENT OF THE INTERIOR
GEOLOGICAL SURVEY

DULAC QUADRANGLE
LOUISIANA-TERREBONNE PARISH
7.5 MINUTE SERIES (TOPOGRAPHIC)

Produced by the United States Geological Survey
in cooperation with State of Louisiana agencies

SCALE 1:24 000

CONTOUR INTERVAL 5 FEET
NATIONAL GEODETIC VERTICAL DATUM OF 1929

FOR SALE BY U.S. GEOLOGICAL SURVEY DENVER, COLORADO 80225, OR RESTON, VIRGINIA 22092
AND LOUISIANA DEPARTMENT OF TRANSPORTATION AND DEVELOPMENT, BATON ROUGE, LOUISIANA 70804

DULAC, LA.

1994

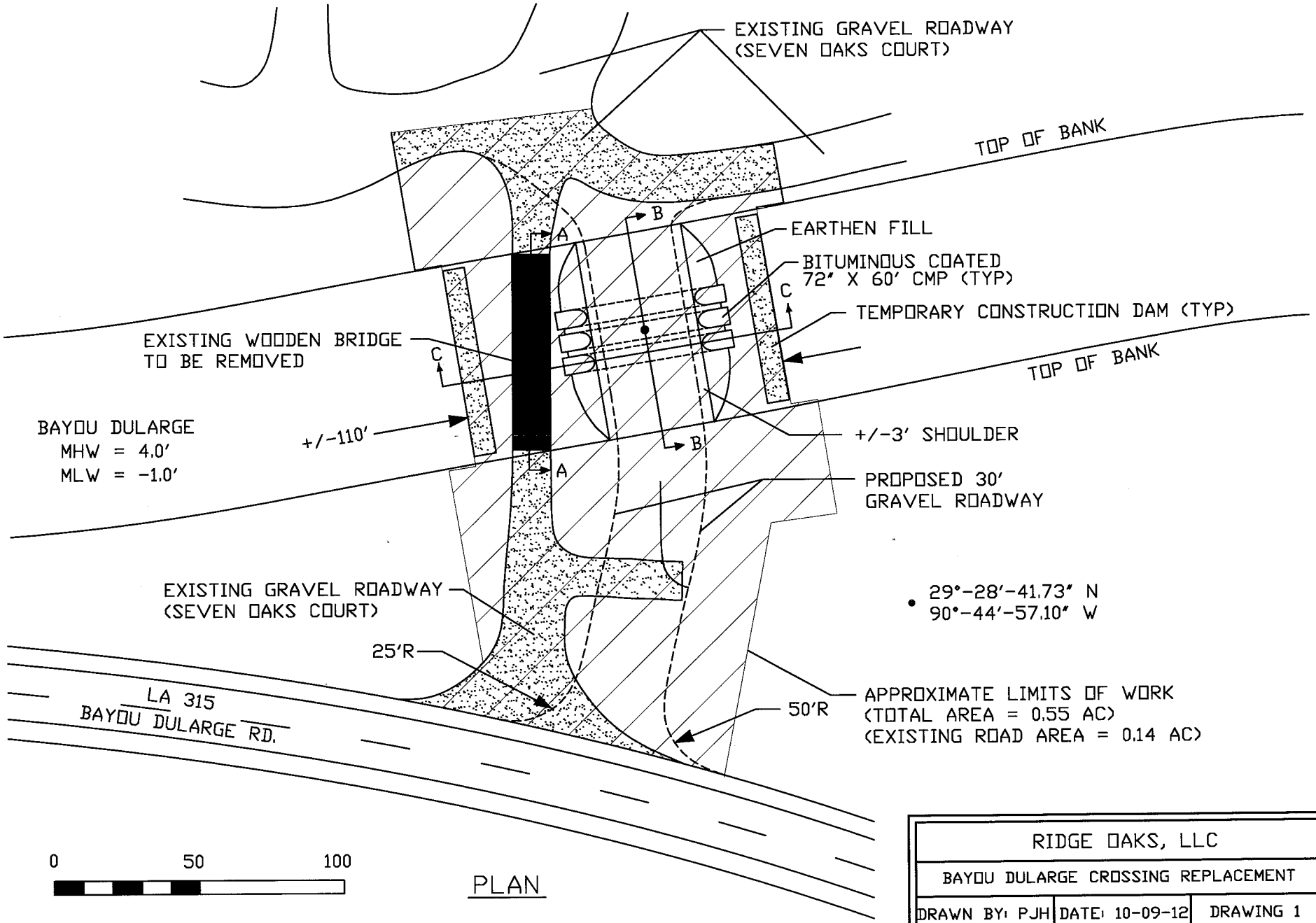

RIDGE OAKS, LLC		
BAYOU DULARGE CROSSING REPLACEMENT		
DRAWN BY: PJH	DATE: 10-09-12	DRAWING 1

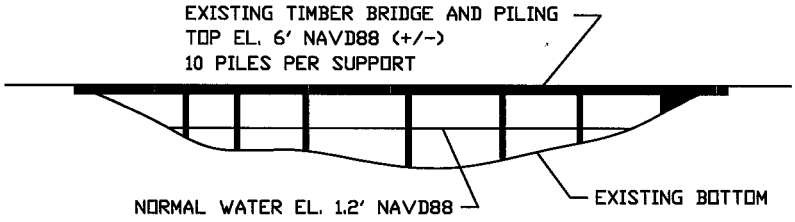

SECTION A-A

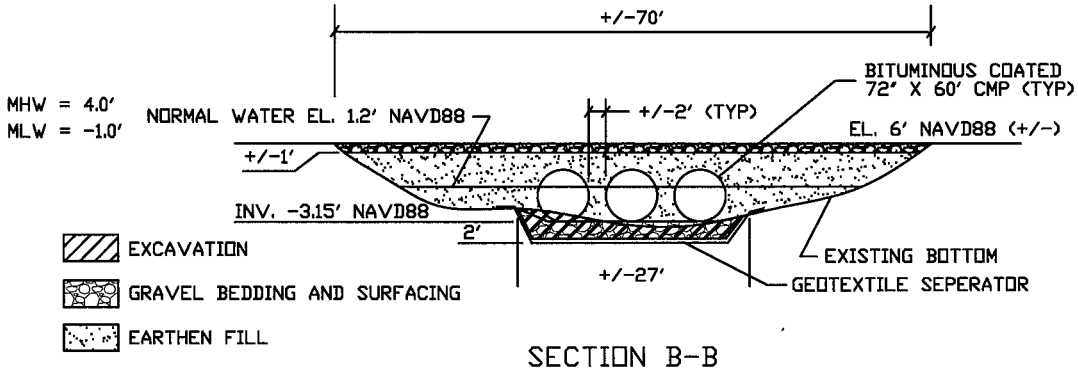

SECTION B-B

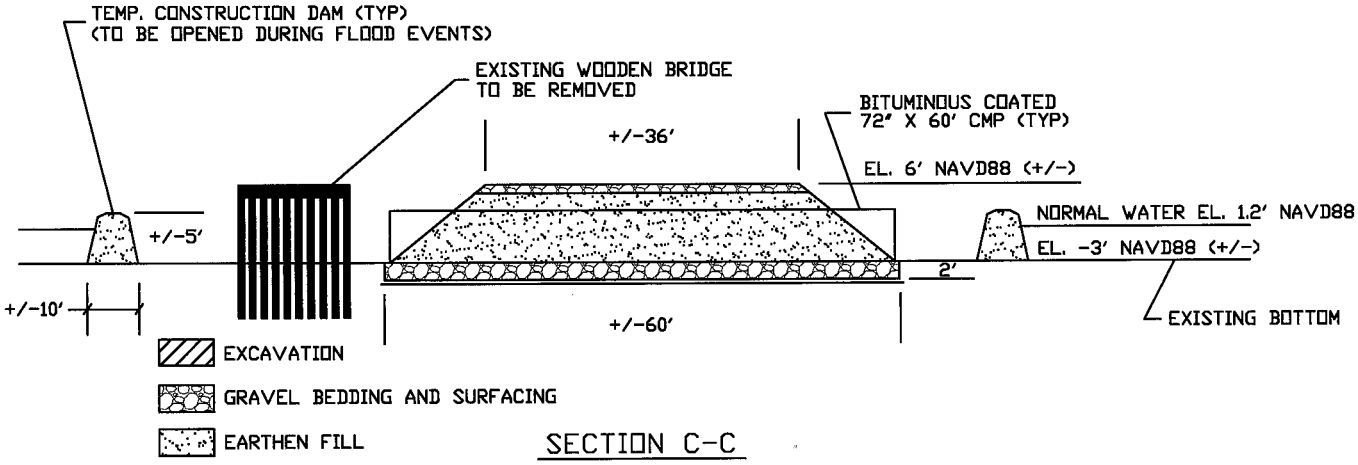

SECTION C-C

0' 50'

RIDGE OAKS, LLC		
BAYOU DULARGE CROSSING REPLACEMENT		
DRAWN BY: PJH	DATE: 10-09-12	DRAWING 2