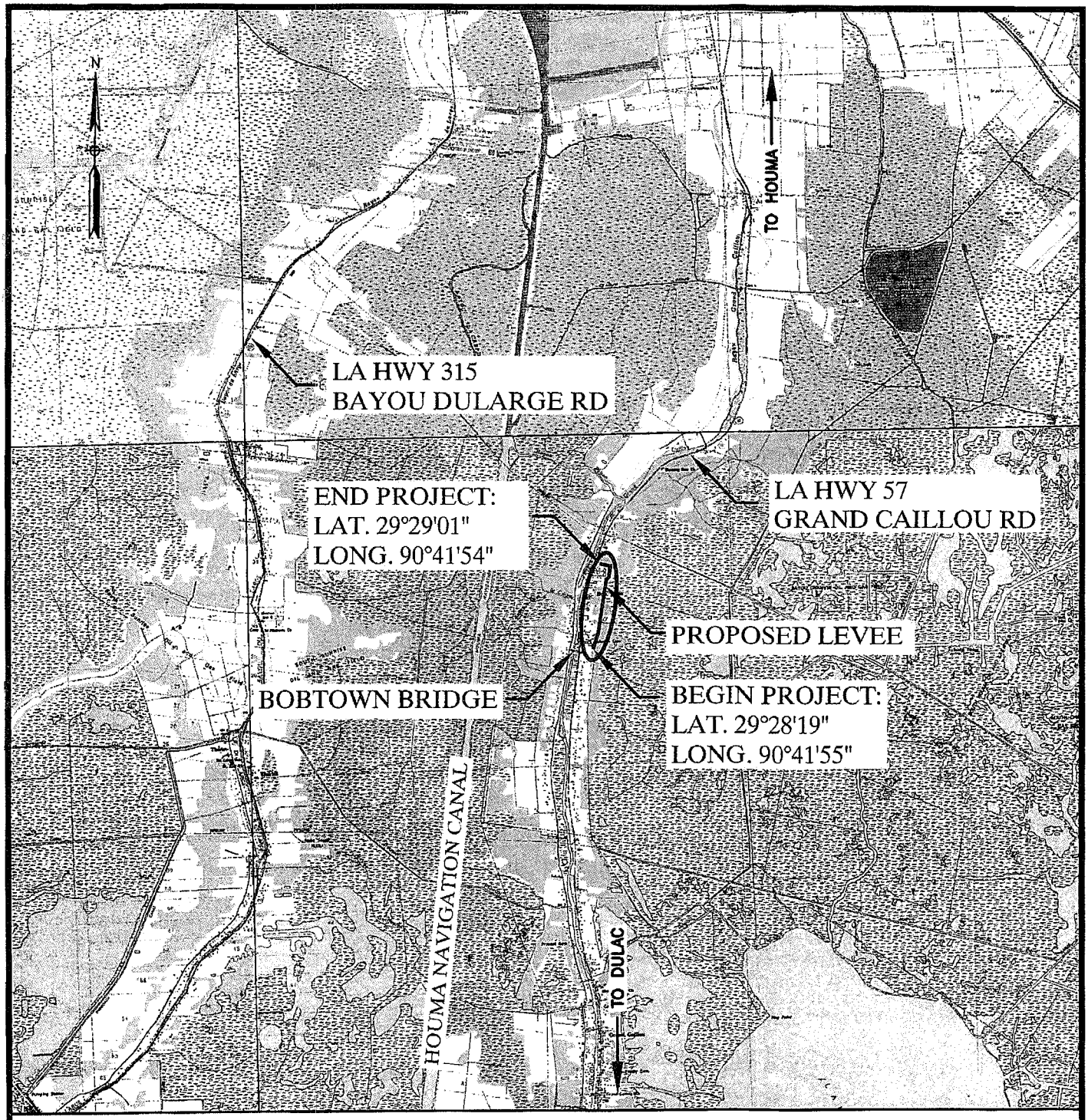

VICINITY MAP

2,000 1,000 0 2,000 4,000

(SCALE IN FEET)

PREPARED BY: GSE ASSOCIATES, LLC
ENGINEERS • ARCHITECTS • PLANNERS • SURVEYORS
A Providence Company Affiliate

SUZIE CANAL LEVEE EXTENSION
LOCATED IN SECTIONS 9, 10, & 11
T18S–R17E
TERREBONNE PARISH, LOUISIANA

DATE: JUNE 19, 2012

GSE PROJECT NO. 441–028–GSE

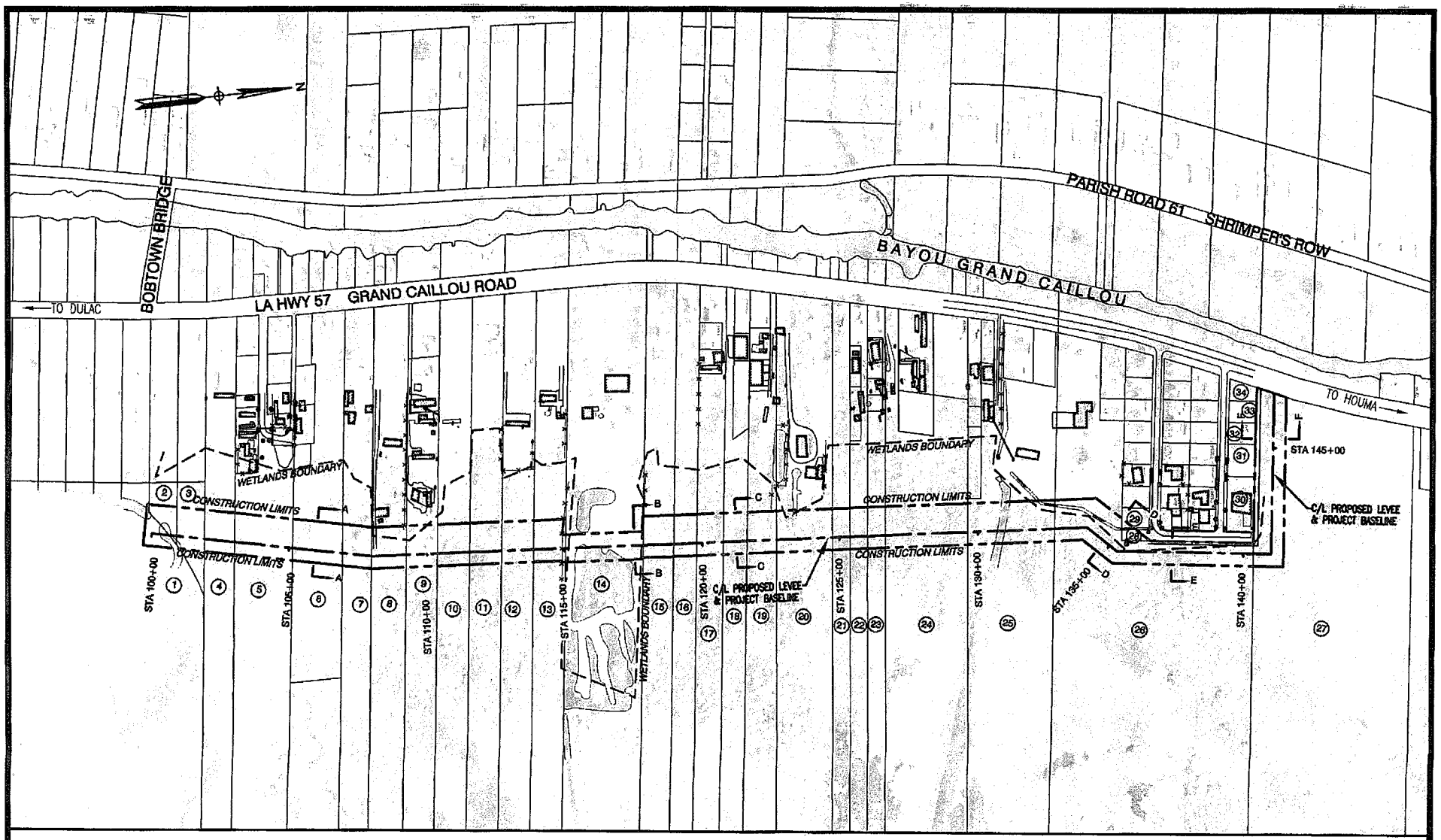

OVERALL VIEW

500 250 0 500 1000

(SCALE IN FEET)

⊛ = PROPERTY ID NUMBER

PREPARED BY: GSE ASSOCIATES, LLC
ENGINEERS • ARCHITECTS • PLANNERS • SURVEYORS
A Providence Company Affiliate

SUZIE CANAL LEVEE EXTENSION
LOCATED IN SECTION 9, 10, & 11
T18S–R17E
TERREBONNE PARISH, LOUISIANA

DATE: JUNE 19, 2012

GSE PROJECT NO. 441–028–GSE

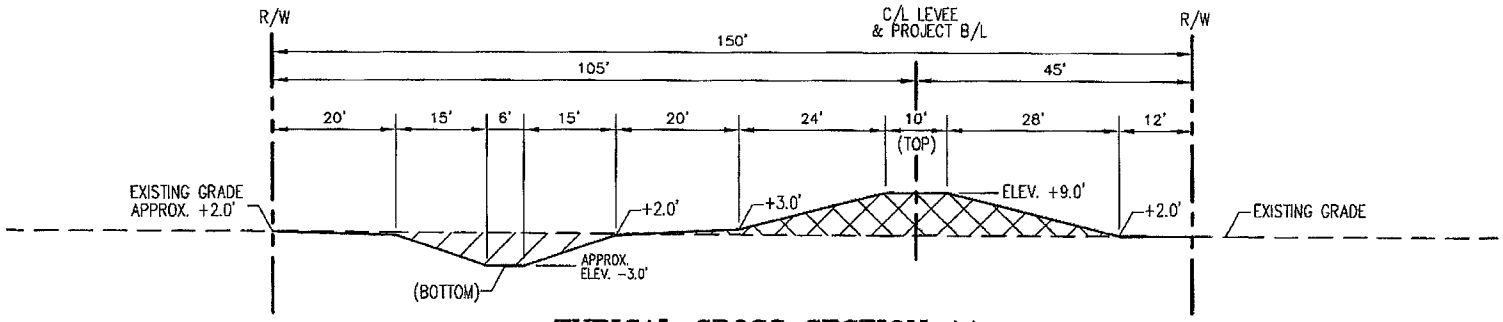

TYPICAL CROSS SECTION AA

SUZIE CANAL LEVEE EXTENSION
STA. 100+00 TO 114+95

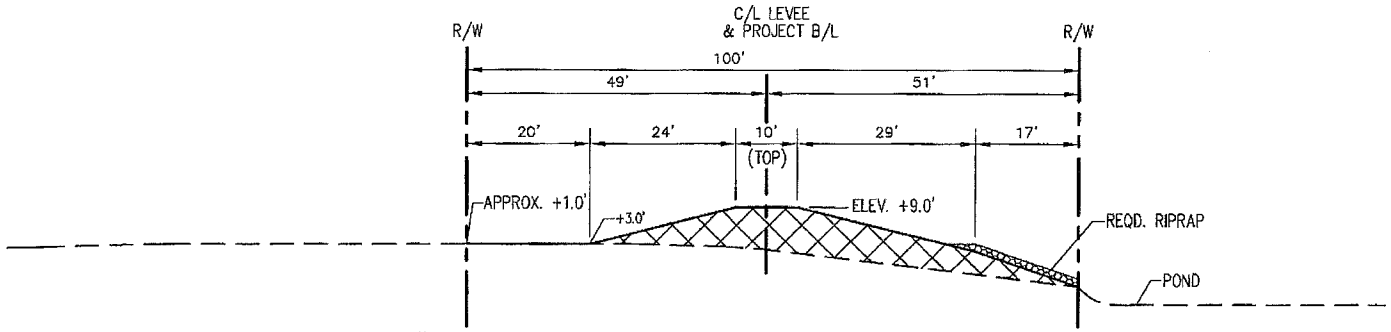

TYPICAL CROSS SECTION BB

SUZIE CANAL LEVEE EXTENSION
STA. 114+95 TO 117+85

LEGEND

- FILL MATERIAL
- EXCAVATION

* NOTE: DRAINAGE CANAL SIDE SLOPES ARE 1:±3 AND LEVEE SIDE SLOPES ARE 1:±4.

TYPICAL CROSS SECTION

30 15 0 30 60

(SCALE IN FEET)

PREPARED BY: GSE ASSOCIATES, LLC
ENGINEERS • ARCHITECTS • PLANNERS • SURVEYORS
A Providence Company Affiliate

SUZIE CANAL LEVEE EXTENSION
LOCATED IN SECTION 9, 10, & 11
T18S-R17E
TERREBONNE PARISH, LOUISIANA

DATE: JUNE 19, 2012

GSE PROJECT NO. 441-028-GSE

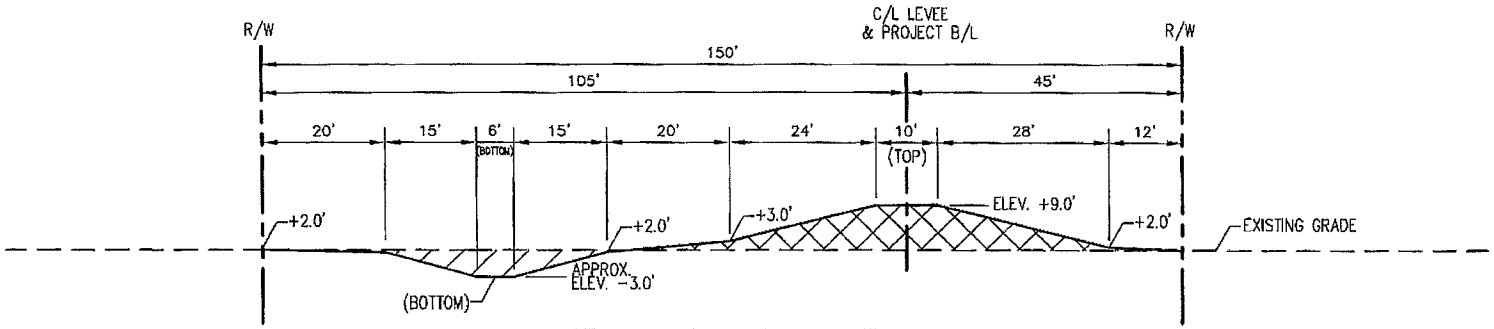

TYPICAL CROSS SECTION CC

SUZIE CANAL LEVEE EXTENSION
STA. 117+85 TO 133+94

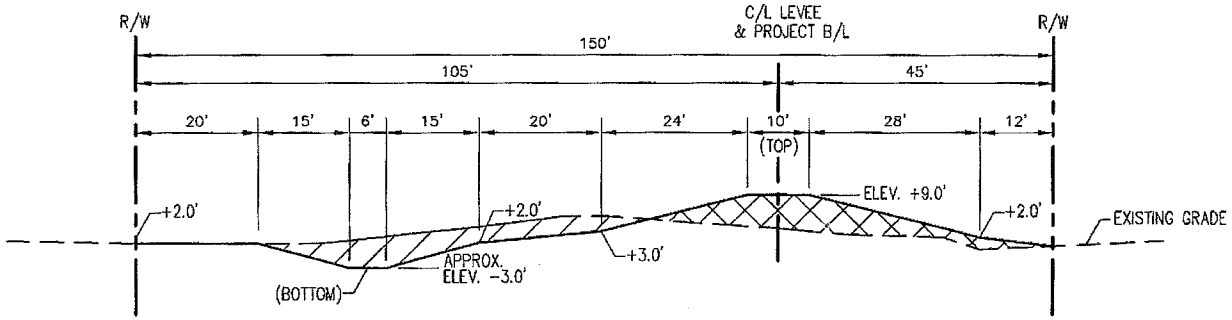

TYPICAL CROSS SECTION DD

SUZIE CANAL LEVEE EXTENSION
STA. 133+94 TO 136+59

LEGEND

- FILL MATERIAL
- EXCAVATION

* NOTE: DRAINAGE CANAL SIDE SLOPES ARE 1:±3 AND LEVEE SIDE SLOPES ARE 1:±4.

TYPICAL CROSS SECTION

30 15 0 30 60

(SCALE IN FEET)

PREPARED BY: GSE ASSOCIATES, LLC
ENGINEERS • ARCHITECTS • PLANNERS • SURVEYORS
A Providence Company Affiliate

SUZIE CANAL LEVEE EXTENSION
LOCATED IN SECTION 9, 10, & 11
T18S–R17E
TERREBONNE PARISH, LOUISIANA

DATE: JUNE 19, 2012

GSE PROJECT NO. 441–028–GSE

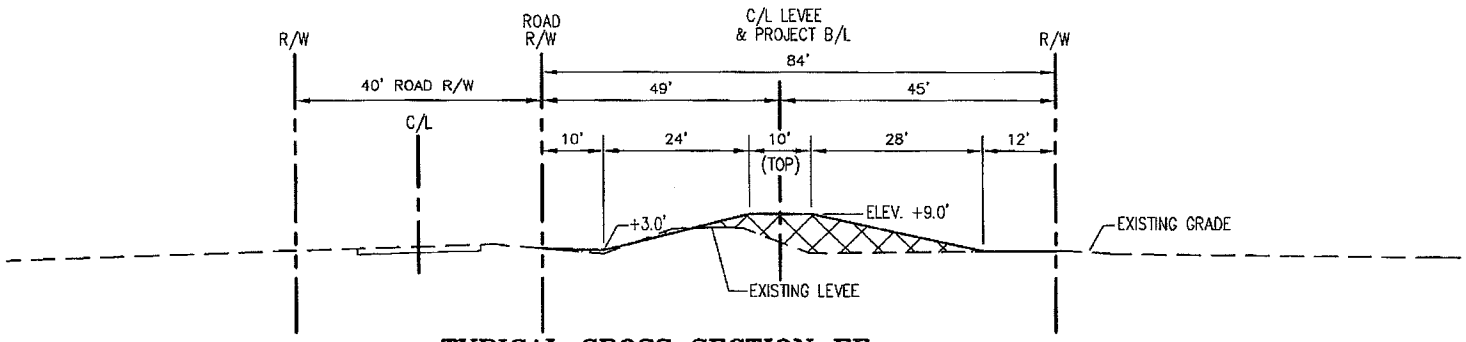

TYPICAL CROSS SECTION EE

SUZIE CANAL LEVEE EXTENSION
STA. 136+59 TO 140+36

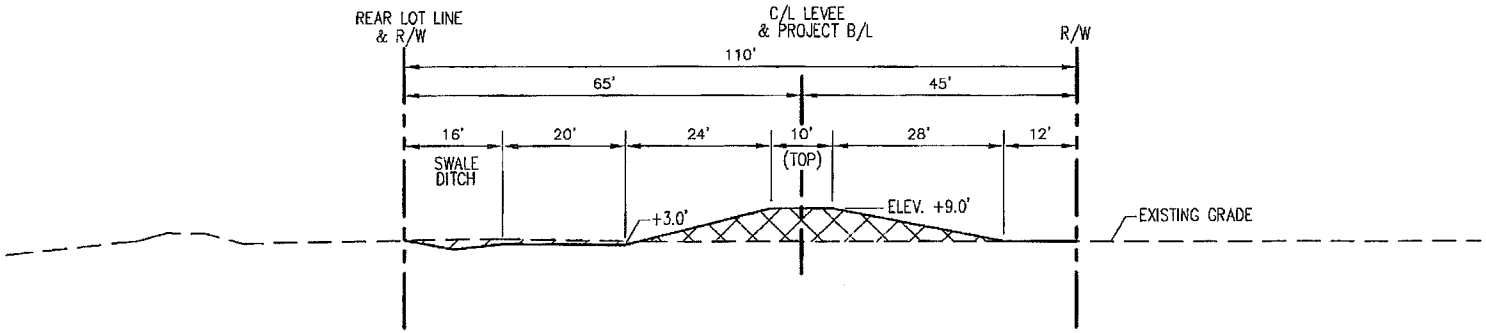

TYPICAL CROSS SECTION FF

SUZIE CANAL LEVEE EXTENSION
STA. 140+36 TO 147+02

LEGEND

- FILL MATERIAL
- EXCAVATION

* NOTE: DRAINAGE CANAL SIDE SLOPES ARE 1:±3 AND LEVEE SIDE SLOPES ARE 1:±4.

TYPICAL CROSS SECTION

30 15 0 30 60

(SCALE IN FEET)

PREPARED BY: GSE ASSOCIATES, LLC
ENGINEERS • ARCHITECTS • PLANNERS • SURVEYORS
A Providence Company Affiliate

SUZIE CANAL LEVEE EXTENSION
LOCATED IN SECTION 9, 10, & 11
T18S–R17E
TERREBONNE PARISH, LOUISIANA

DATE: JUNE 19, 2012

GSE PROJECT NO. 441–028–GSE

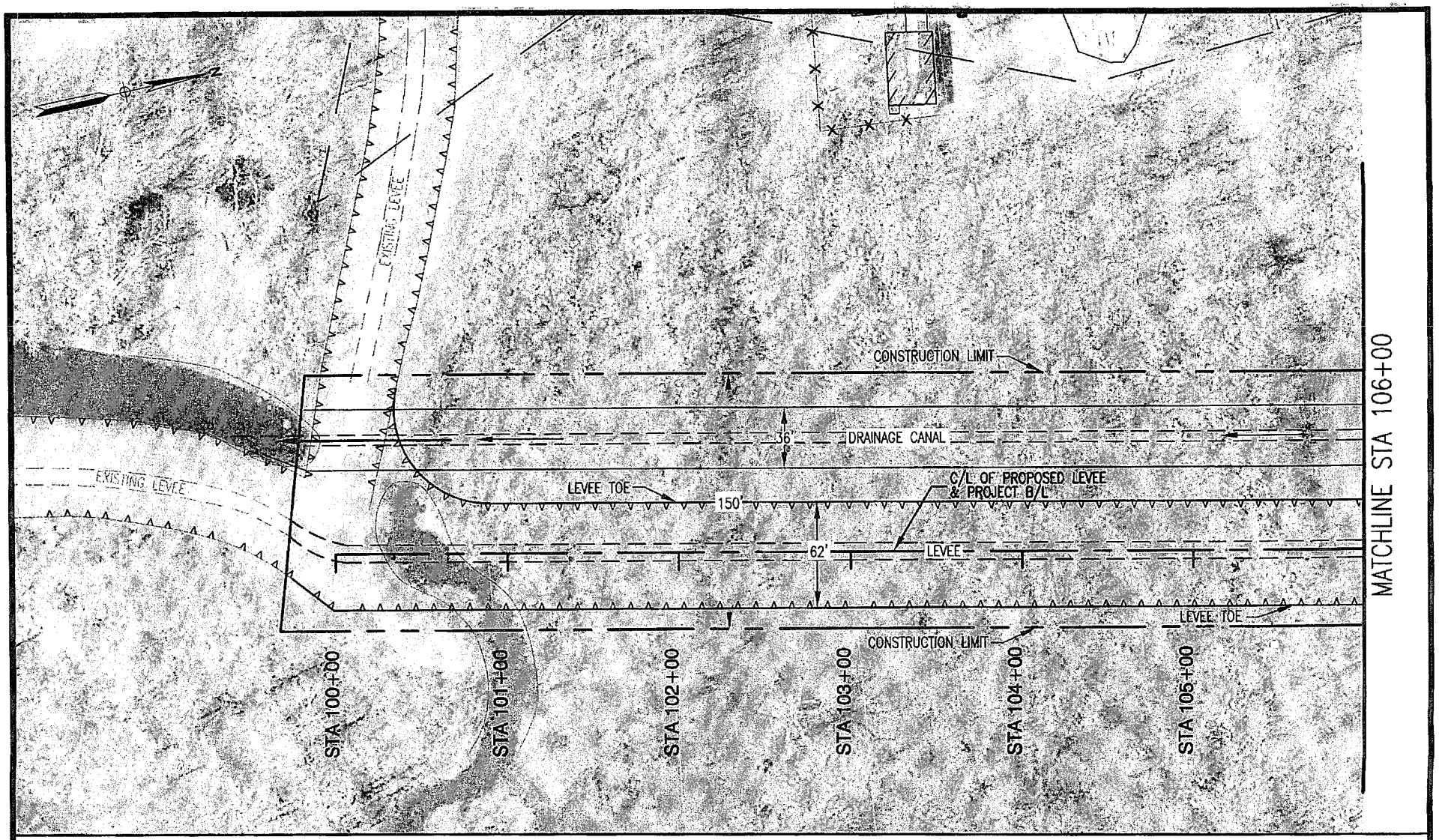

PLAN VIEW

80 40 0 80 160

(SCALE IN FEET)

TOTAL WETLAND IN CONSTRUCTION LIMITS
2.153 ACRES
TOTAL WETLAND NORTH OF PROJECT
2.622 ACRES

SUZIE CANAL LEVEE EXTENSION
LOCATED IN SECTION 9, 10, & 11
T18S–R17E
TERREBONNE PARISH, LOUISIANA

PREPARED BY: GSE ASSOCIATES, LLC
ENGINEERS • ARCHITECTS • PLANNERS • SURVEYORS
A Providence Company Affiliate

DATE: JUNE 19, 2012

GSE PROJECT NO. 441–028–GSE

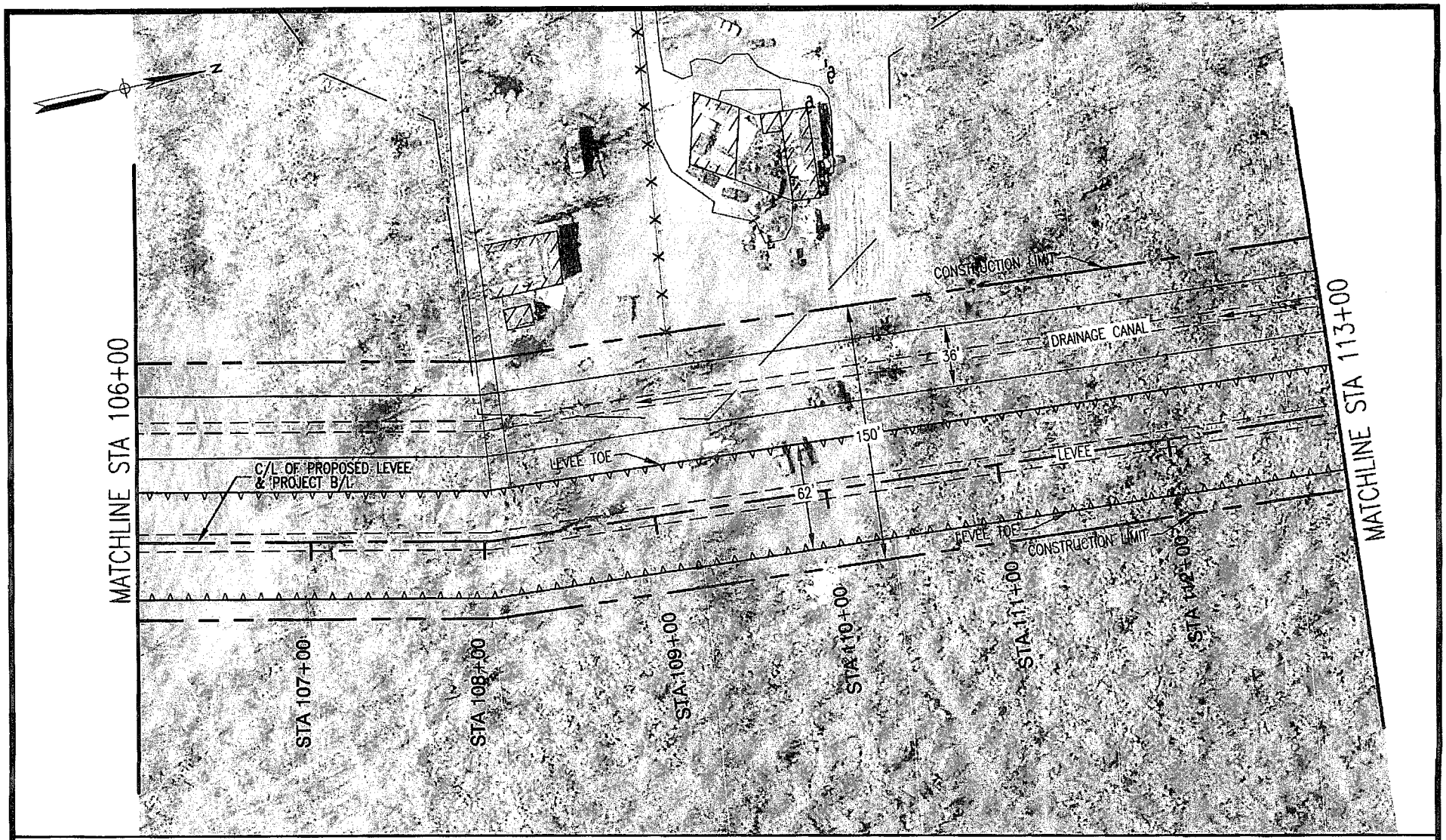

PLAN VIEW

80 40 0 80 160

(SCALE IN FEET)

TOTAL WETLAND IN CONSTRUCTION LIMITS
2.226 ACRES
TOTAL WETLAND NORTH OF PROJECT
2.143 ACRES

SUZIE CANAL LEVEE EXTENSION
LOCATED IN SECTION 9, 10, & 11
T18S–R17E
TERREBONNE PARISH, LOUISIANA

PREPARED BY: GSE ASSOCIATES, LLC
ENGINEERS • ARCHITECTS • PLANNERS • SURVEYORS
A Providence Company Affiliate

DATE: JUNE 19, 2012

GSE PROJECT NO. 441–028–GSE

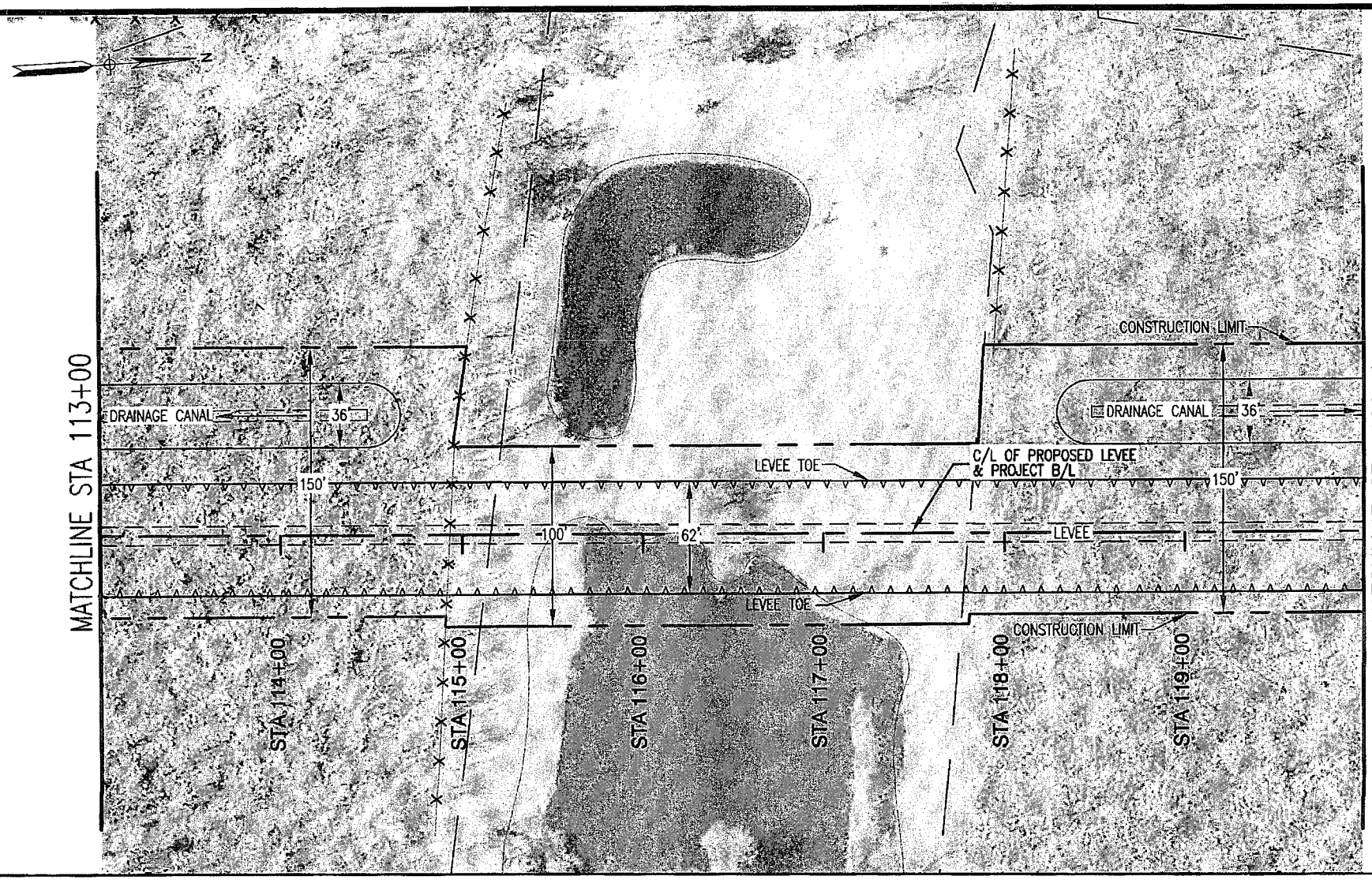

PLAN VIEW

80 40 0 80 160

(SCALE IN FEET)

TOTAL WETLAND IN CONSTRUCTION LIMITS
1.474 ACRES
TOTAL WETLAND NORTH OF PROJECT
2.043 ACRES

SUZIE CANAL LEVEE EXTENSION
LOCATED IN SECTION 9, 10, & 11
T18S–R17E
TERREBONNE PARISH, LOUISIANA

PREPARED BY: GSE ASSOCIATES, LLC
ENGINEERS • ARCHITECTS • PLANNERS • SURVEYORS
A Providence Company Affiliate

DATE: JUNE 19, 2012

GSE PROJECT NO. 441–028–GSE

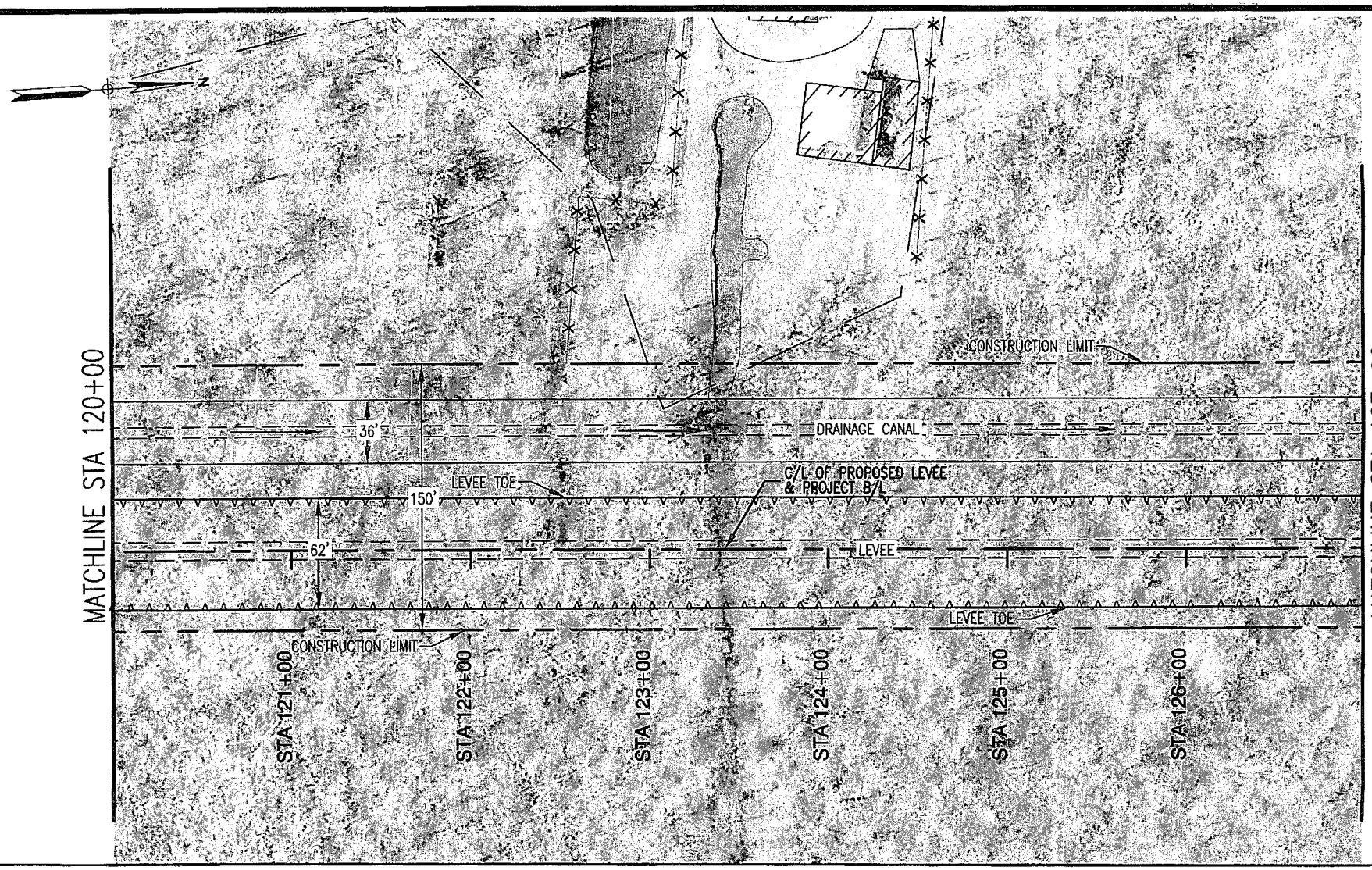

PLAN VIEW

80 40 0 80 160

(SCALE IN FEET)

TOTAL WETLAND IN CONSTRUCTION LIMITS
2.392 ACRES
TOTAL WETLAND NORTH OF PROJECT
2.399 ACRES

SUZIE CANAL LEVEE EXTENSION
LOCATED IN SECTION 9, 10, & 11
T18S–R17E
TERREBONNE PARISH, LOUISIANA

PREPARED BY: GSE ASSOCIATES, LLC
ENGINEERS • ARCHITECTS • PLANNERS • SURVEYORS
A Providence Company Affiliate

DATE: JUNE 19, 2012

GSE PROJECT NO. 441–028–GSE

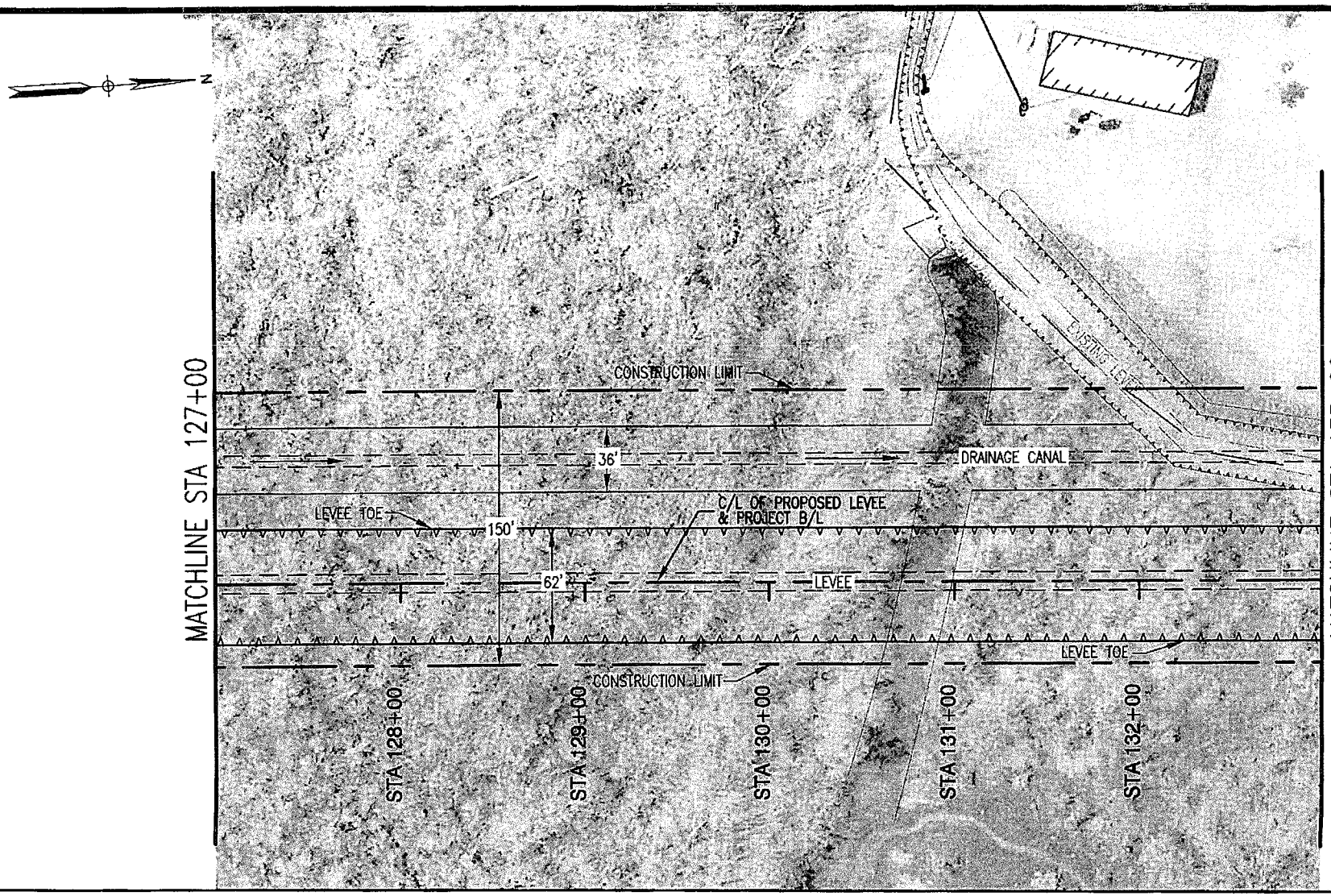

PLAN VIEW

80 40 0 80 160

(SCALE IN FEET)

TOTAL WETLAND IN CONSTRUCTION LIMITS
1.988 ACRES
TOTAL WETLAND NORTH OF PROJECT
2.193 ACRES

SUZIE CANAL LEVEE EXTENSION
LOCATED IN SECTION 9, 10, & 11
T18S–R17E
TERREBONNE PARISH, LOUISIANA

PREPARED BY: GSE ASSOCIATES, LLC
ENGINEERS • ARCHITECTS • PLANNERS • SURVEYORS
A Providence Company Affiliate

DATE: JUNE 19, 2012

GSE PROJECT NO. 441–028–GSE

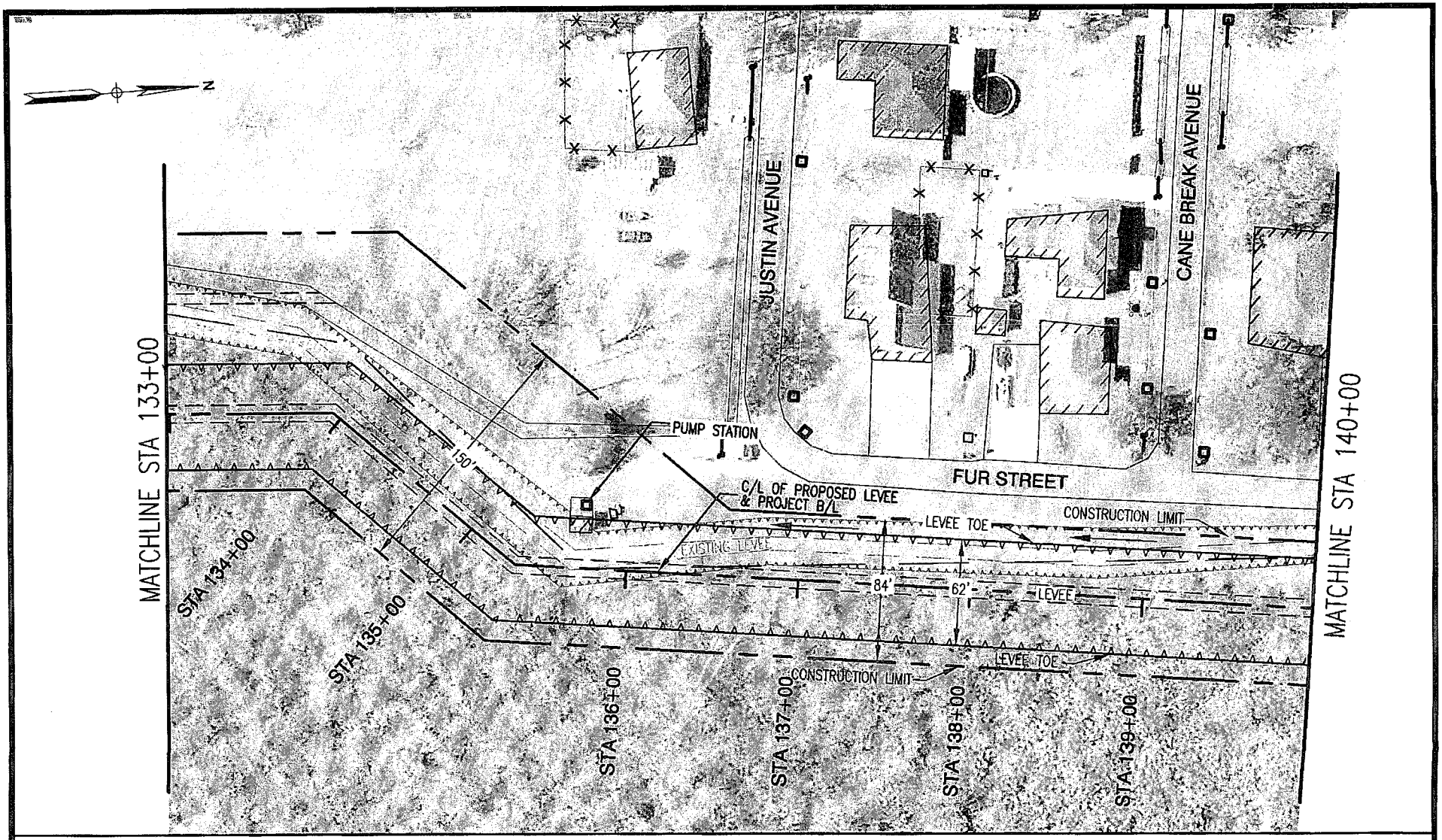

PLAN VIEW

80 40 0 80 160

(SCALE IN FEET)

TOTAL WETLAND IN CONSTRUCTION LIMITS
1.088 ACRES
TOTAL WETLAND NORTH OF PROJECT
0.000 ACRES

SUZIE CANAL LEVEE EXTENSION
LOCATED IN SECTION 9, 10, & 11
T18S–R17E
TERREBONNE PARISH, LOUISIANA

PREPARED BY: GSE ASSOCIATES, LLC
ENGINEERS • ARCHITECTS • PLANNERS • SURVEYORS
A Providence Company Affiliate

DATE: JUNE 19, 2012

GSE PROJECT NO. 441–028–GSE

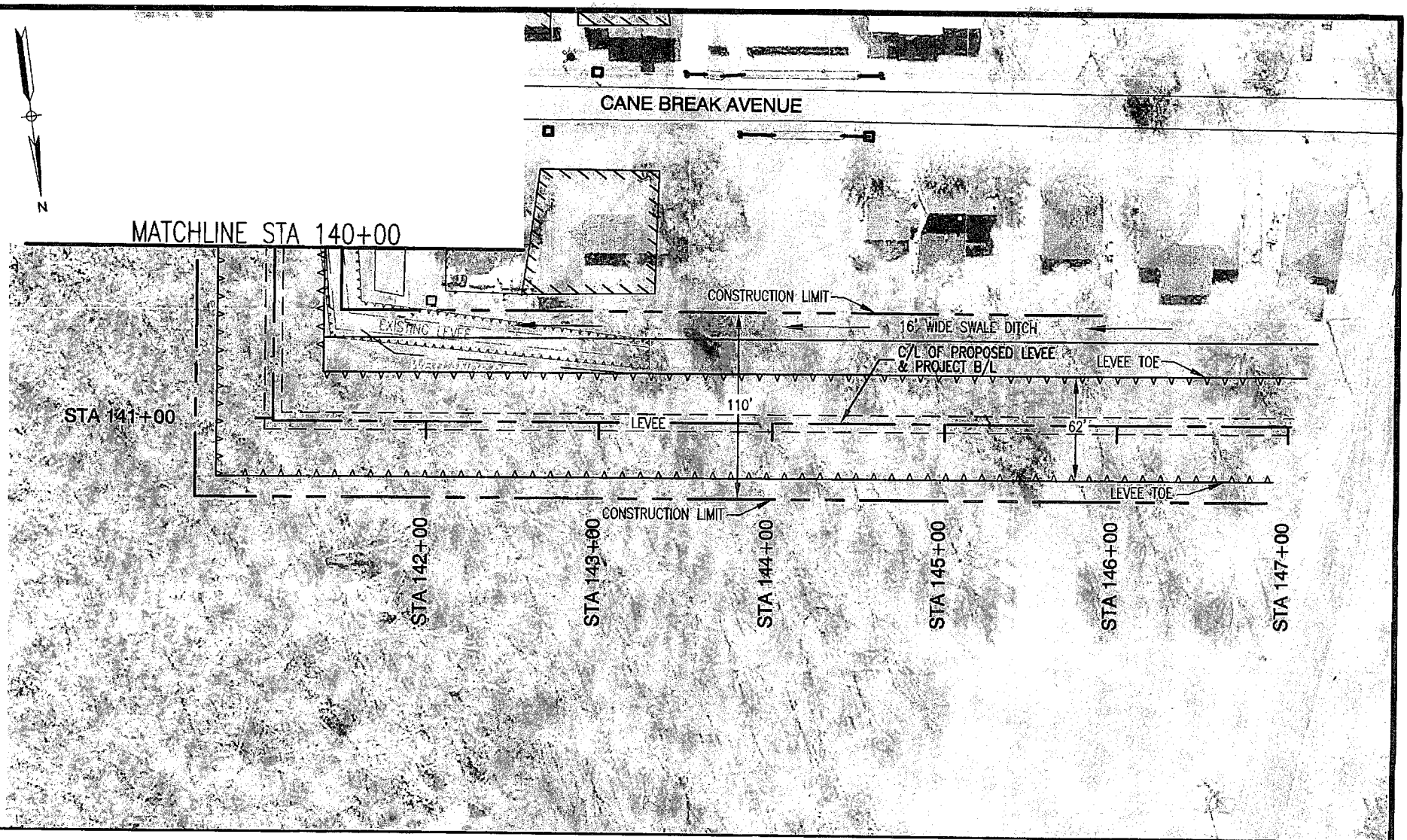

PLAN VIEW

80 40 0 80 160

(SCALE IN FEET)

TOTAL WETLAND IN CONSTRUCTION LIMITS
0.595 ACRES
TOTAL WETLAND NORTH OF PROJECT
0.000 ACRES

SUZIE CANAL LEVEE EXTENSION
LOCATED IN SECTION 9, 10, & 11
T18S–R17E
TERREBONNE PARISH, LOUISIANA

PREPARED BY: GSE ASSOCIATES, LLC
ENGINEERS • ARCHITECTS • PLANNERS • SURVEYORS
A Providence Company Affiliate

DATE: JUNE 19, 2012

GSE PROJECT NO. 441–028–GSE