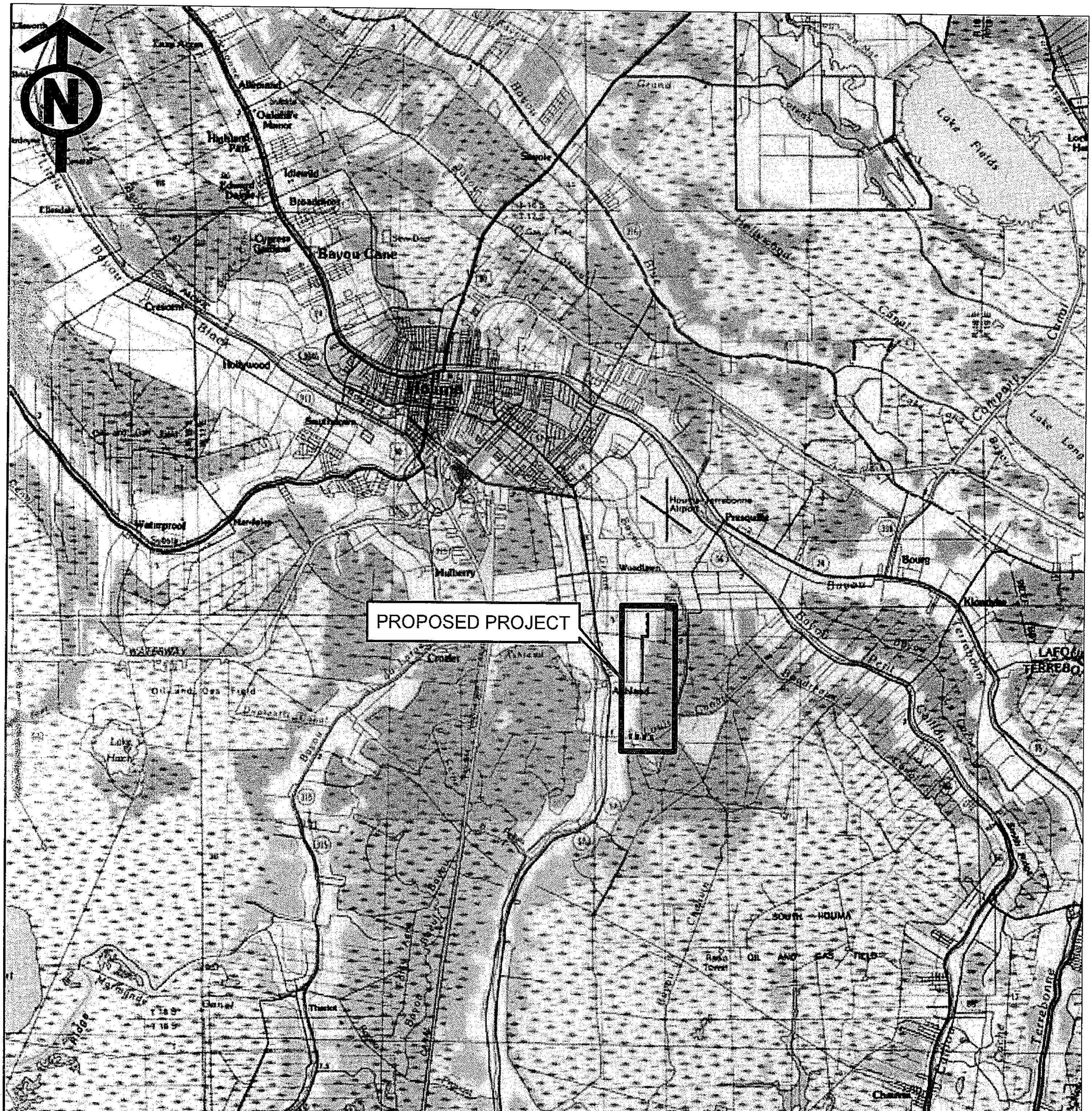

VICINITY MAP

2 0 2 4 Miles

TERREBONNE PARISH CONSOLIDATED GOVT
PROPOSED ASHLAND LEVEE
SECTION 59 & 79, T18S - R18E
TERREBONNE PARISH, LOUISIANA

Date:	Drawn By:	Sheet No.:	Revisions	
07/20/11	CDL	1 OF 5	Revision No.:	Date:
Scale:	Approved By:	File No.:	1	02/16/12
1"=2MI	MD/JG	141397	2	08/08/12

Shaw® Shaw Coastal, Inc.
197 Elysian Drive, Houma, LA 70363

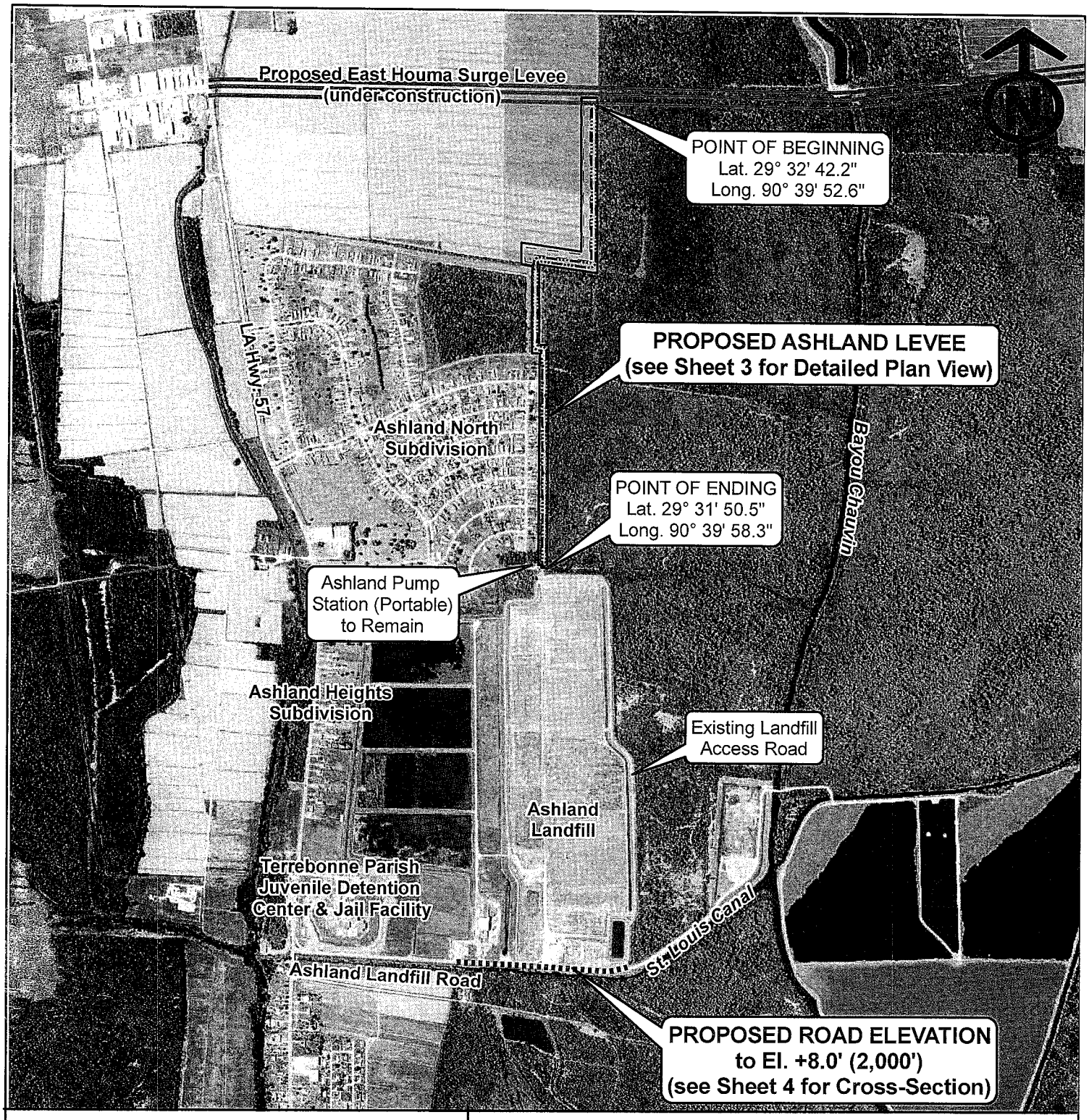

PLAN VIEW

1,500 0 1,500 3,000 Feet

TERREBONNE PARISH CONSOLIDATED GOVT
PROPOSED ASHLAND LEVEE
SECTION 59 & 79, T18S - R18E
TERREBONNE PARISH, LOUISIANA

Date:	Drawn By:	Sheet No.:	Revisions	
07/20/11	CDL	2 OF 5	Revision No.:	Date:
Scale:	Approved By:	File No.:	1	02/16/12
1"=1500'	MD/JG	141397	2	08/08/12

Shaw® Shaw Coastal, Inc.
197 Elysian Drive, Houma, LA 70363

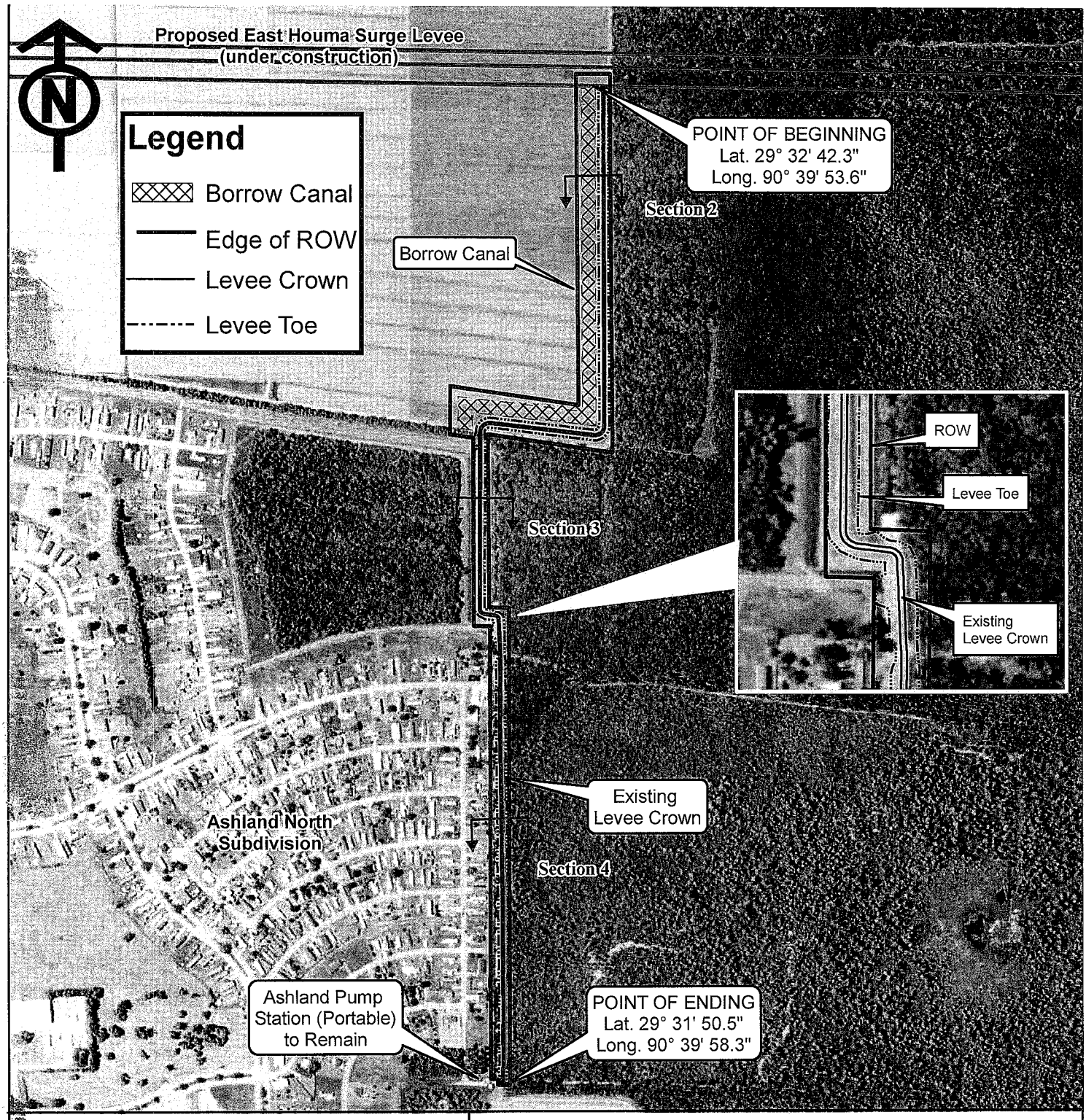

PLAN VIEW

700 0 700 1,400 Feet

TERREBONNE PARISH CONSOLIDATED GOVT
PROPOSED ASHLAND LEVEE
SECTION 59, T18S - R18E
TERREBONNE PARISH, LOUISIANA

Date:	Drawn By:	Sheet No.:
08/19/2011	CDL	3 OF 5
Scale:	Approved By:	File No.:
1"=700'	MD/JG	141397

Revisions

Revision No.:	Date:
1	02/16/12
2	08/08/12

Shaw® Shaw Coastal, Inc.
197 Elysian Drive, Houma, LA 70363

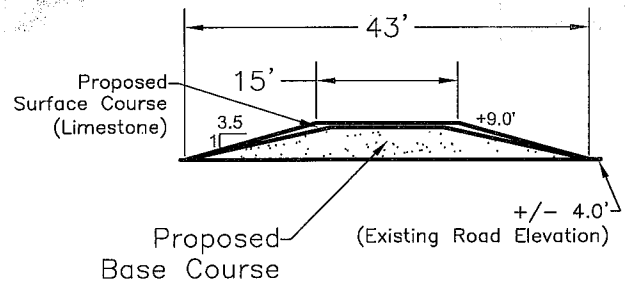

SECTION 1 –
Elevated Road

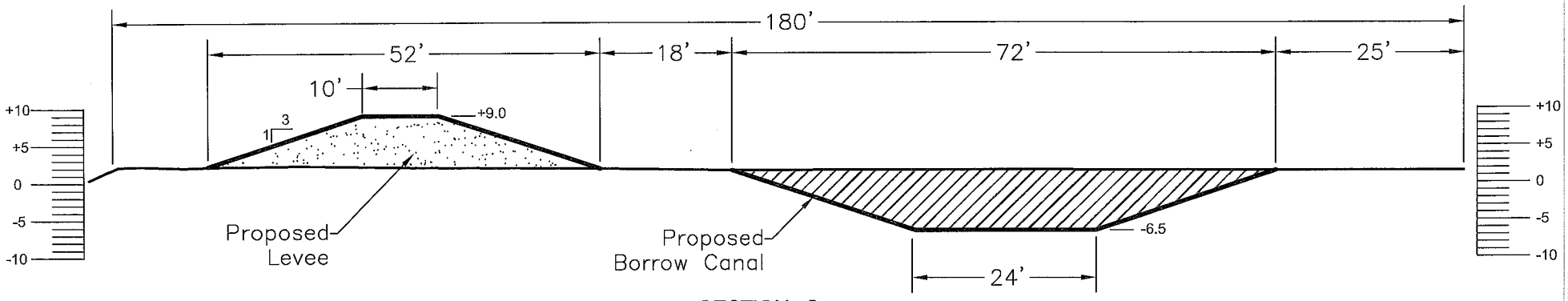

SECTION 2

CROSS SECTIONS

SCALE: 1" = 20'

10' 0 10' 20' 30' 40'

TERREBONNE PARISH CONSOLIDATED GOVT.
PROPOSED ASHLAND LEVEE
SECTION 59 & 79, T18S–R18E
TERREBONNE PARISH, LOUISIANA

Date:	Drawn By:	Sheet No.:
07/20/11	CDL	4 OF 5
Scale:	Approved By:	File No.:
1"=20'	MD	141397

Revisions:

No.:	Date:
1	02/17/2012
2	08/08/2012

Shaw® Shaw Coastal, Inc.
197 Elysian Drive; Houma, Louisiana 70363

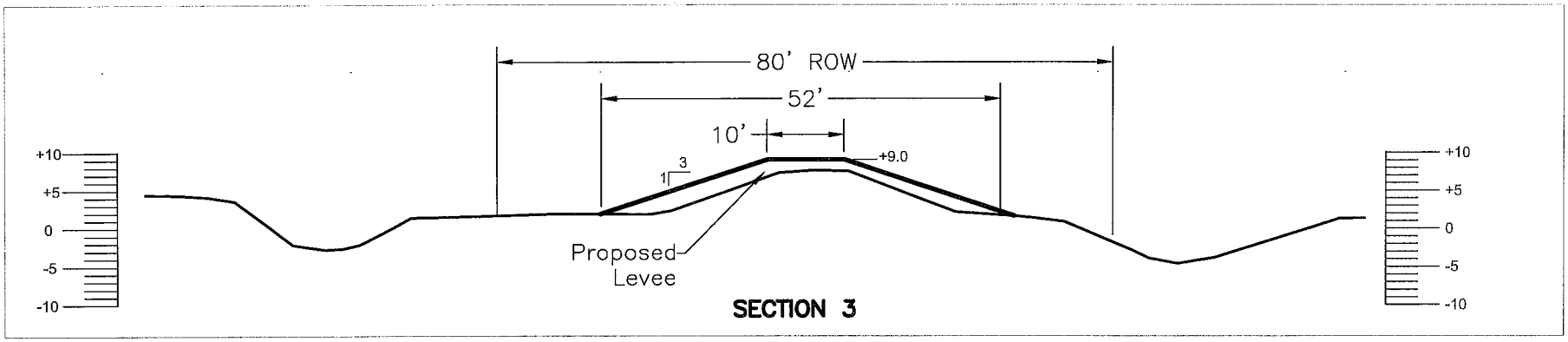

SECTION 3

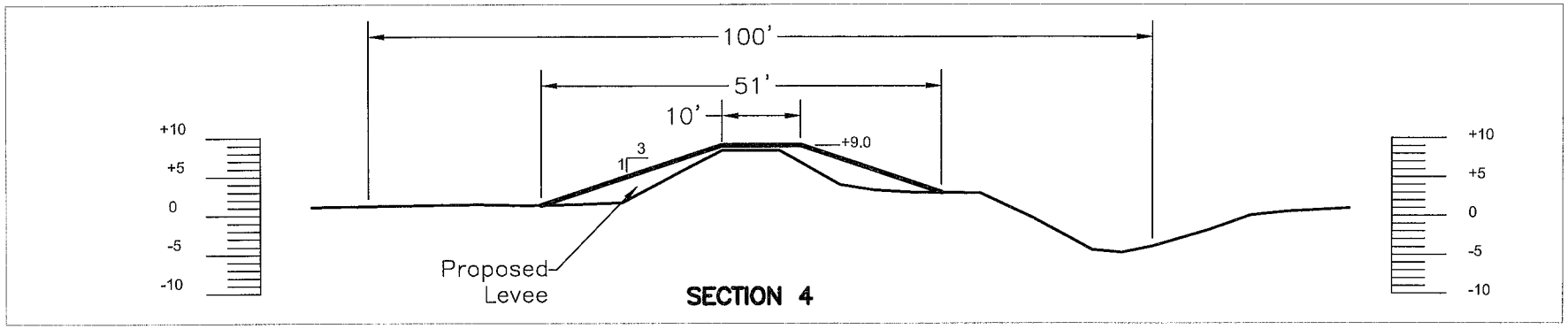

SECTION 4

Approximately 32,500 cubic yards of material will be dredged from an adjacent borrow canal and approximately 34,700 cubic yards of material will be hauled in for levee construction. Approximately 10,000 cubic yards of hauled in dirt and 7,000 cubic yards of limestone will be used to raise the existing road. Approximately 3.7 acres of wetlands will be directly impacted by this activity.

CROSS SECTIONS

SCALE: 1" = 20'

10' 0 10' 20' 30' 40'

TERREBONNE PARISH CONSOLIDATED GOVT.
PROPOSED ASHLAND LEVEE
SECTION 59 & 79, T18S–R18E
TERREBONNE PARISH, LOUISIANA

Date:	Drawn By:	Sheet No.:
07/20/11	CDL	5 of 5
Scale:	Approved By:	File No.:
1"=20'	MD	141397

Revisions:

No.:	Date:
1	02/17/2012
2	08/08/2012

Shaw® Shaw Coastal, Inc.
197 Elysian Drive; Houma, Louisiana 70363