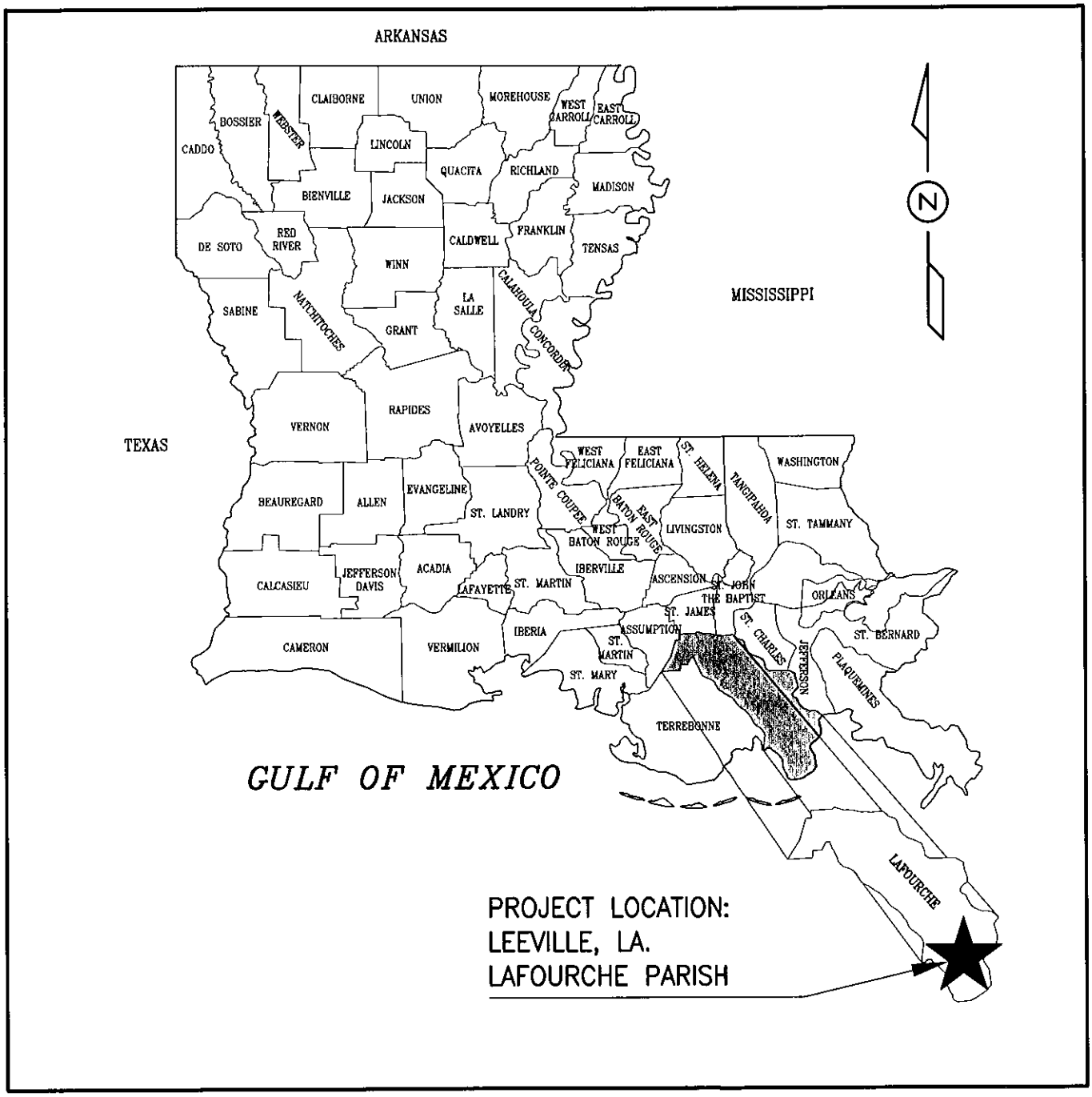

STATE VICINITY MAP

NOT TO SCALE

LEEVILLE PUBLIC BOAT LAUNCH

PROPOSED: DREDGING, EARTHEN FILL, LIMESTONE FILL, RIPRAP, BULKHEAD, BOAT RAMPS, & WHARVES

APPLIED BY: LAFOURCHE PARISH GOVERNMENT

AREA: LEEVILLE, LAFOURCHE PARISH, LOUISIANA

PICCIOLA & ASSOCIATES, INC.
CIVIL ENGINEERS · NAVAL ARCHITECTS
LAND SURVEYORS · MARINE ENGINEERS
P.O. BOX. 687
CUT OFF, LOUISIANA 70345
(985) 632-5786

J.N. 1216-0901 DATE: 08-22-2012

E:\09-DIR\12160901 LPG - Leeville Boat Launch\ACAD\CURRENT\PERMIT_REV 08-22-2012\01-SHT_TITLE.dwg, Layout1, 9/7/2012 9:29:43 AM, lee

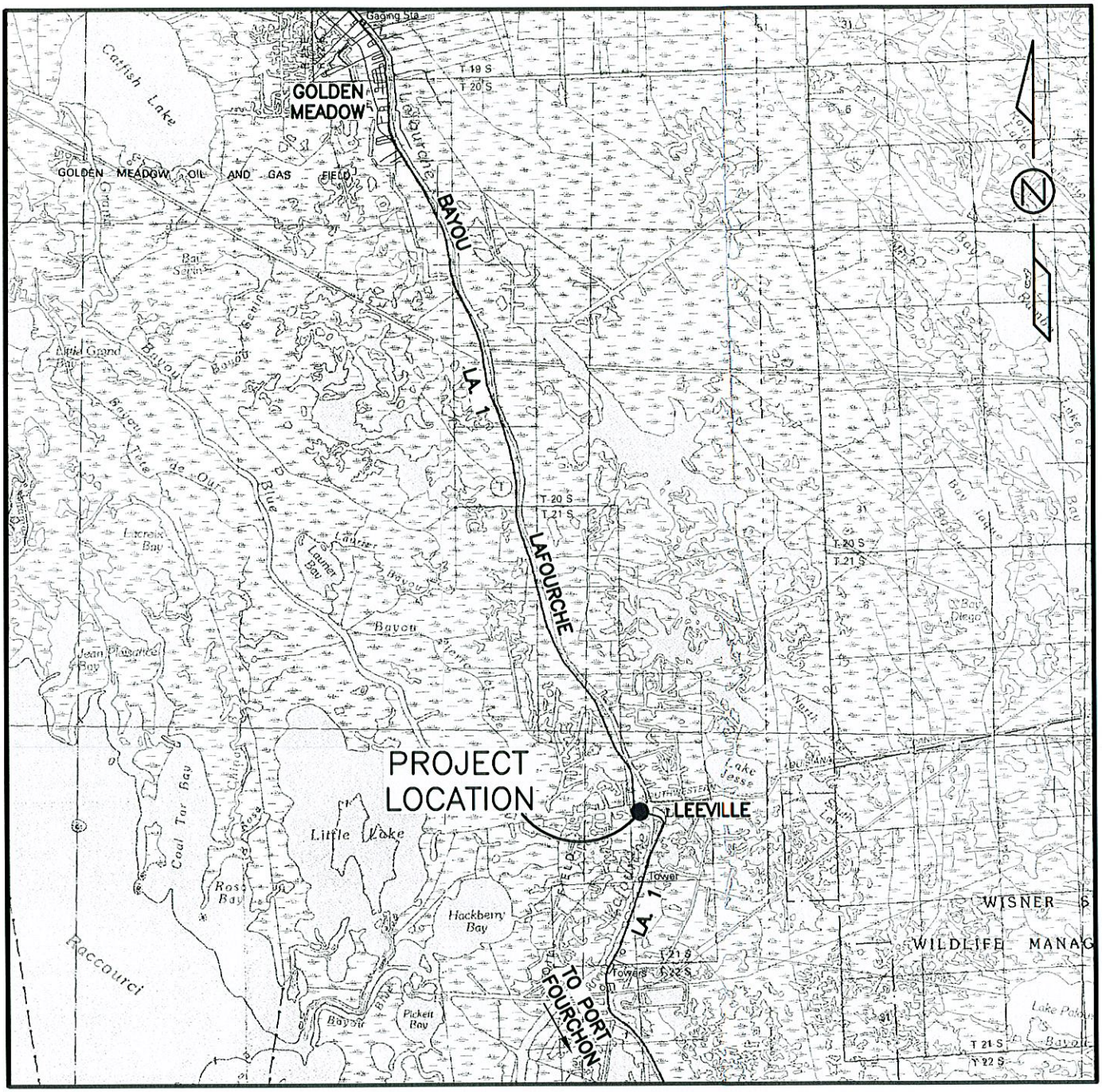

LEEVILLE & GOLDEN MEADOW
QUAD. MAPS

LOCAL VICINITY MAP

10 0 10

SCALE: 1" = 10'

PROPOSED: DREDGING, EARTHEN FILL, LIMESTONE FILL, RIPRAP, BULKHEAD, BOAT RAMPS, & WHARVES
APPLIED BY: LAFOURCHE PARISH GOVERNMENT
AREA: LEEVILLE, LAFOURCHE PARISH, LOUISIANA
PROJECT IS LOCATED IN SECTION 26, T-21-S, R-22-E
LATITUDE = 29° 14' 51"
LONGITUDE = 90° 12' 38"
(LAT. & LONG. IS LOCATED APPROXIMATELY IN THE CENTER OF THE PROJECT SITE)

PICCIOLA & ASSOCIATES, INC.
CIVIL ENGINEERS
LAND SURVEYORS
NAVAL ARCHITECTS
MARINE ENGINEERS
P.O. BOX. 687
CUT OFF, LOUISIANA 70345
(985) 632-5786

J.N. 1216-0901 DATE: 08-22-2012

E:\09-DIR\12160901 LPG - Leeville Boat Launch\ACAD\CURRENT\PERMIT_REV 08-22-2012\02-SHT_VIC MAP.dwg, Layout1, 9/7/2012 9:31:00 AM, lee

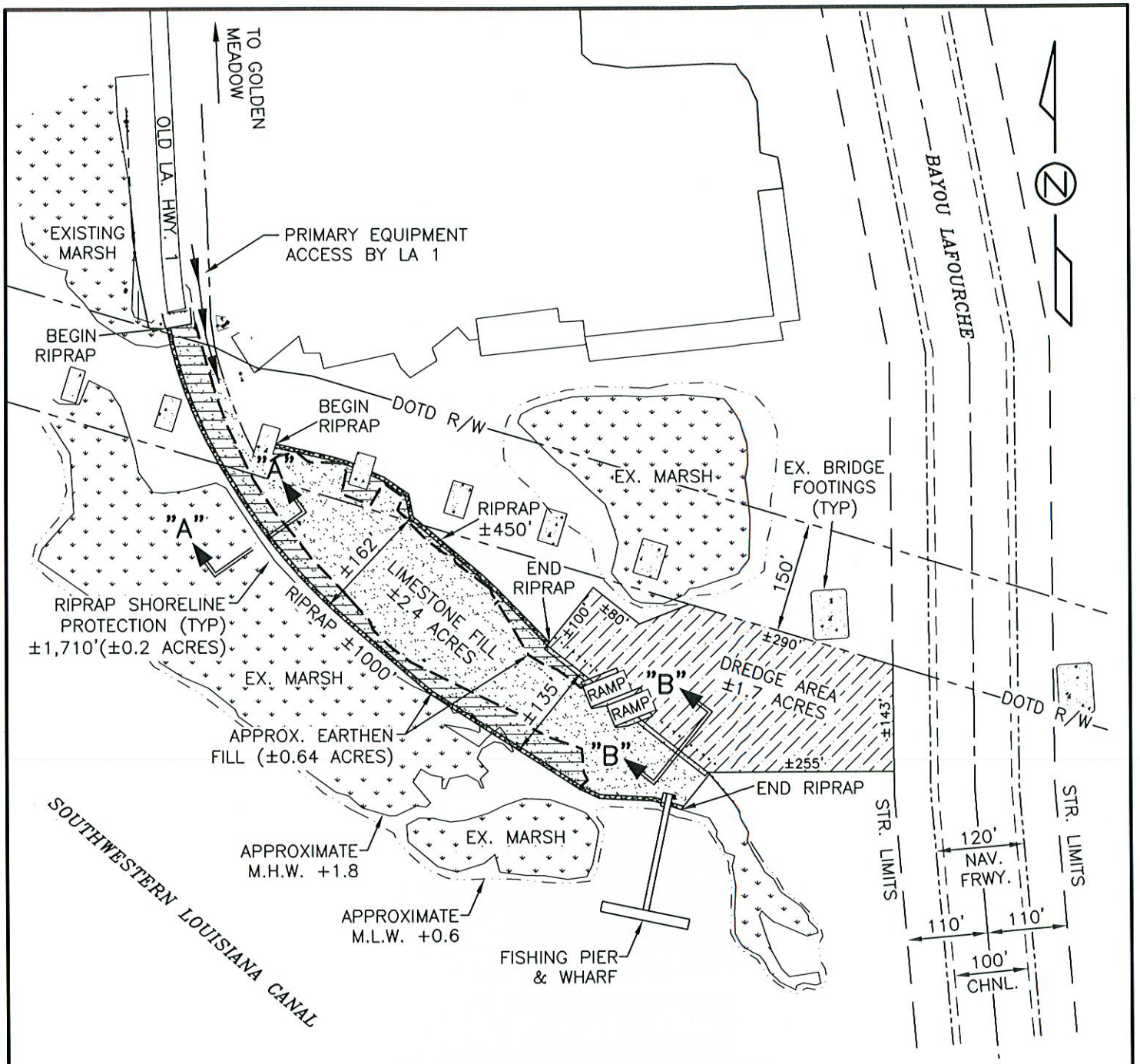

OVERALL SITE PLAN

200 0 200

SCALE: 1" = 200'

GENERAL NOTES:

1. SPOIL MATERIAL FROM DREDGING PROCESS SHALL BE UTILIZED AS FILL MATERIAL ON THE SITE. EXCESS SPOIL MATERIAL, IF ANY, SHALL BE TRUCKED OFF SITE TO A NON-WETLAND AREA.

2. REFERENCE SHEETS 4 THRU 7 FOR MORE INFORMATION ON WHARVES, RAMPS AND TYPICAL SECTIONS.

ESTIMATED VOLUMES:

DREDGE: ±15,000 CU. YD. (NET)
EARTHEN FILL: ±4,000 CU. YD. (NET)
UNCOMPACTED EARTHEN FILL: ±15,000 CU. YD.
LIMESTONE: ±3,910 CU. YD. (NET)
RIPRAP: ±2,363 CU. YD. (NET)

PICCIOLA & ASSOCIATES, INC.
CIVIL ENGINEERS
LAND SURVEYORS
NAVAL ARCHITECTS
MARINE ENGINEERS
P.O. BOX. 687
CUT OFF, LOUISIANA 70345
(985) 632-5786

J.N. 1216-0901

REV: 09-07-2012
DATE: 08-22-2012

E:\09-DTR\12160901 LPG - Leeville Boat Launch\ACAD\CURRENT\PERMIT_REV 08-22-2012\03-SHT_OVERALL SITE.dwg, OVERVIEW SITE PLAN, 9/7/2012 9:24:47 AM, lee

PICCIOLA & ASSOCIATES, INC.
CIVIL ENGINEERS
LAND SURVEYORS
NAVAL ARCHITECTS
MARINE ENGINEERS
P.O. BOX 687
CUT OFF, LOUISIANA 70345
(985) 632-5786

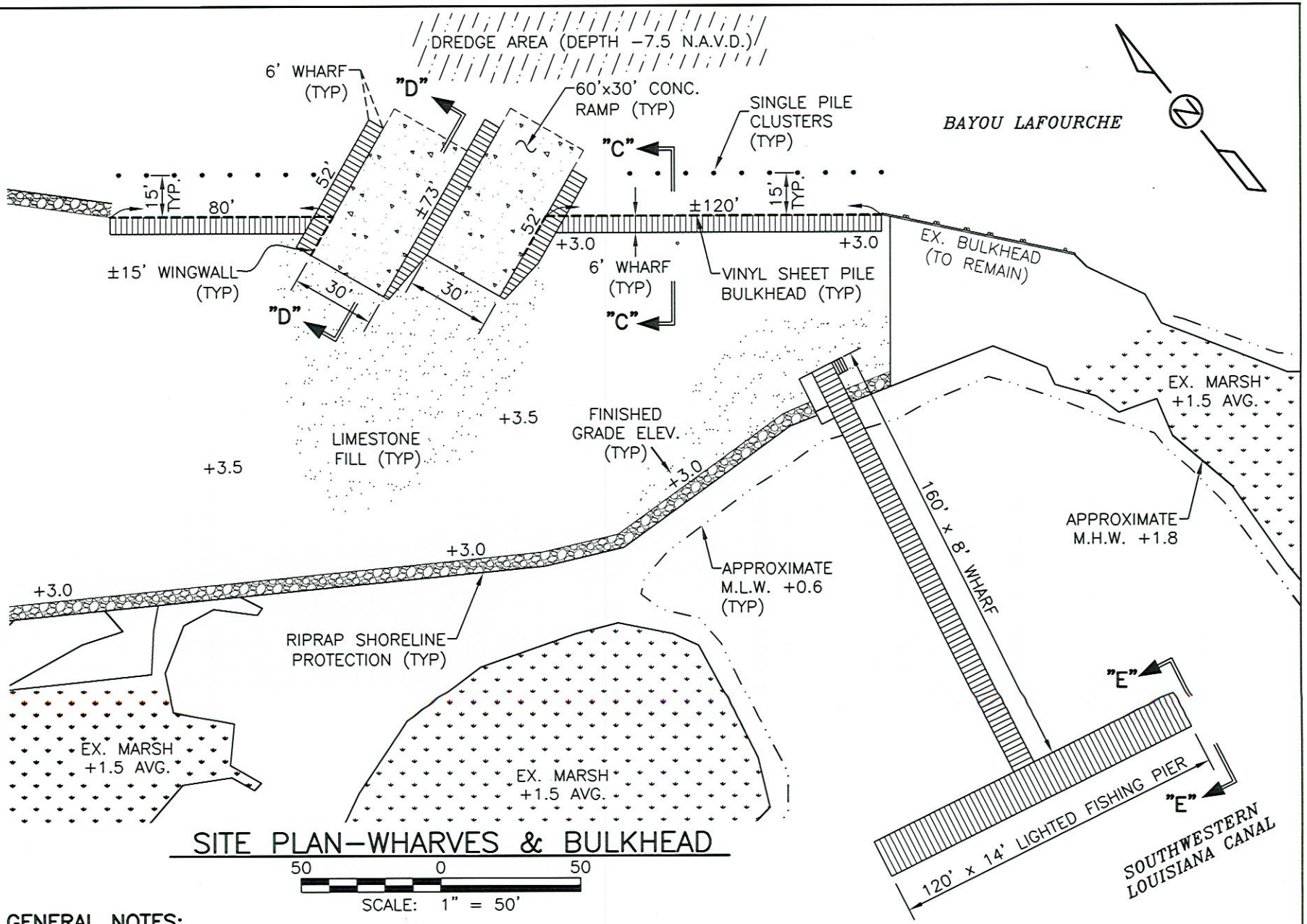

SITE PLAN—WHARVES & BULKHEAD

50 0 50

SCALE: 1" = 50'

GENERAL NOTES:

1. ALL LUMBER UTILIZED IN THE CONSTRUCTION OF THE BULKHEAD, WHARVES AND PIER SHALL BE SOUTHERN YELLOW PINE #2 MIN. PRESSURE TREATED.
2. ALL HARDWARE AND FASTENERS SHALL BE GALVANIZED STEEL UNLESS NOTED OTHERWISE.
3. REFERENCE SHEETS 6 AND 7 OF 7 FOR TYPICAL SECTIONS "C"–"C" THRU "E"–"E".

J.N. 1216-0901 DATE: 08-22-2012

PICCIOLA & ASSOCIATES, INC.
CIVIL ENGINEERS
LAND SURVEYORS
NAVAL ARCHITECTS
MARINE ENGINEERS
P.O. BOX 687
CUT OFF, LOUISIANA 70345
(985) 632-5786

J.N. 1216-0901

REV: 09-07-2012
DATE: 08-22-2012

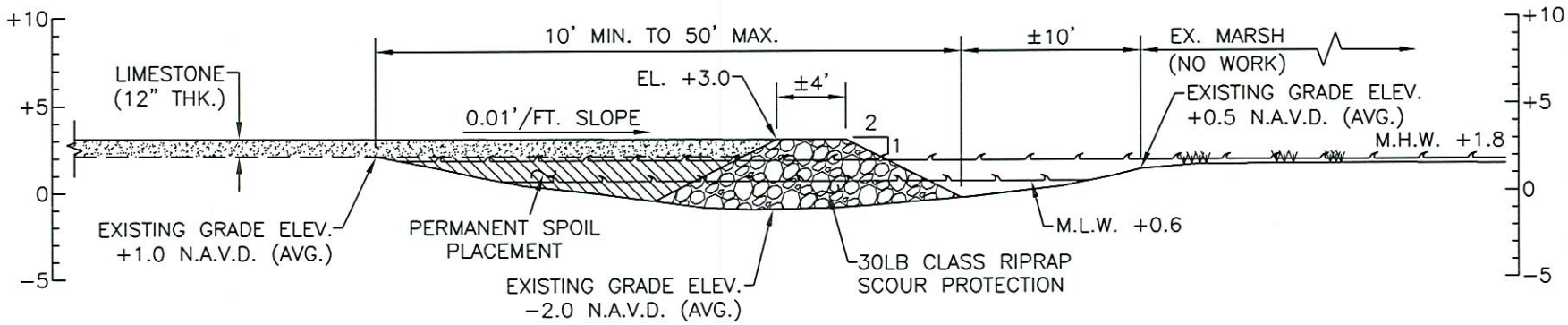

SECTION "A"–"A"

10 0 10
SCALE: 1" = 10'

GENERAL NOTES:

1. SPOIL MATERIAL FROM DREDGING PROCESS SHALL BE UTILIZED AS FILL MATERIAL ON THE SITE. EXCESS SPOIL MATERIAL, IF ANY, SHALL BE TRUCKED OFF SITE TO A NON-WETLAND AREA.

ESTIMATED VOLUMES:

DREDGE: ±15,000 CU. YD. (NET)
EARTHEN FILL: ±4,000 CU. YD. (NET)
UNCOMPACTED EARTHEN FILL: ±15,000 CU. YD.
LIMESTONE: ±3,910 CU. YD. (NET)
RIPRAP: ±2,363 CU. YD. (NET)

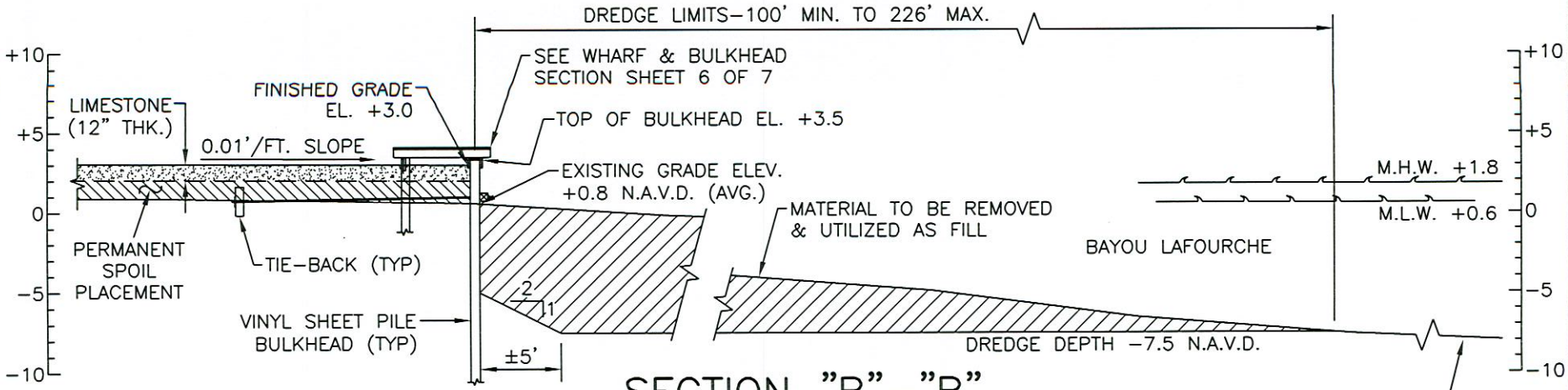

SECTION "B"–"B"

10 0 10
SCALE: 1" = 10'

PICCIOLA & ASSOCIATES, INC.
CIVIL ENGINEERS
LAND SURVEYORS
NAVAL ARCHITECTS
MARINE ENGINEERS
P.O. BOX 687
CUT OFF, LOUISIANA 70345
(985) 632-5766

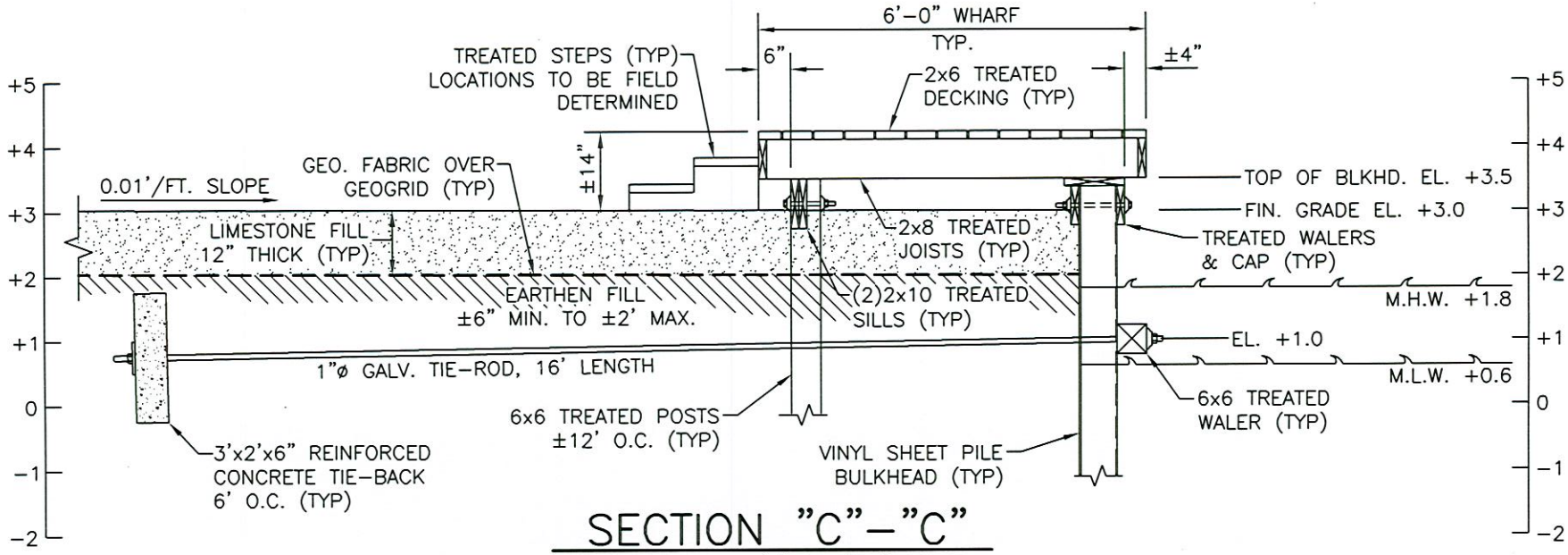

SECTION "C"-"C"

SCALE: 3/8" = 1'-0"

GENERAL NOTES:

1. ALL LUMBER UTILIZED IN THE CONSTRUCTION OF THE BULHKEAD AND WHARVES SHALL BE SOUTHERN YELLOW PINE #2 MIN. PRESSURE TREATED.

2. ALL HARDWARE AND FASTENERS SHALL BE GALVANIZED STEEL UNLESS NOTED OTHERWISE.

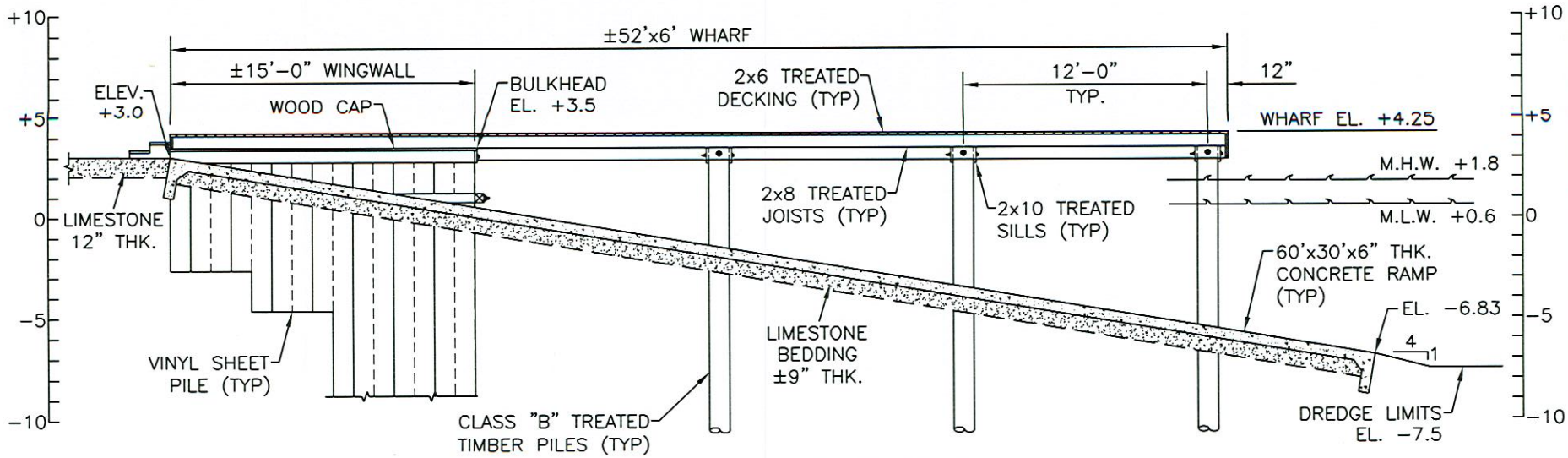

SECTION "D"-"D"

SCALE: 1/8" = 1'-0"

J.N. 1216-0901 DATE: 08-22-2012

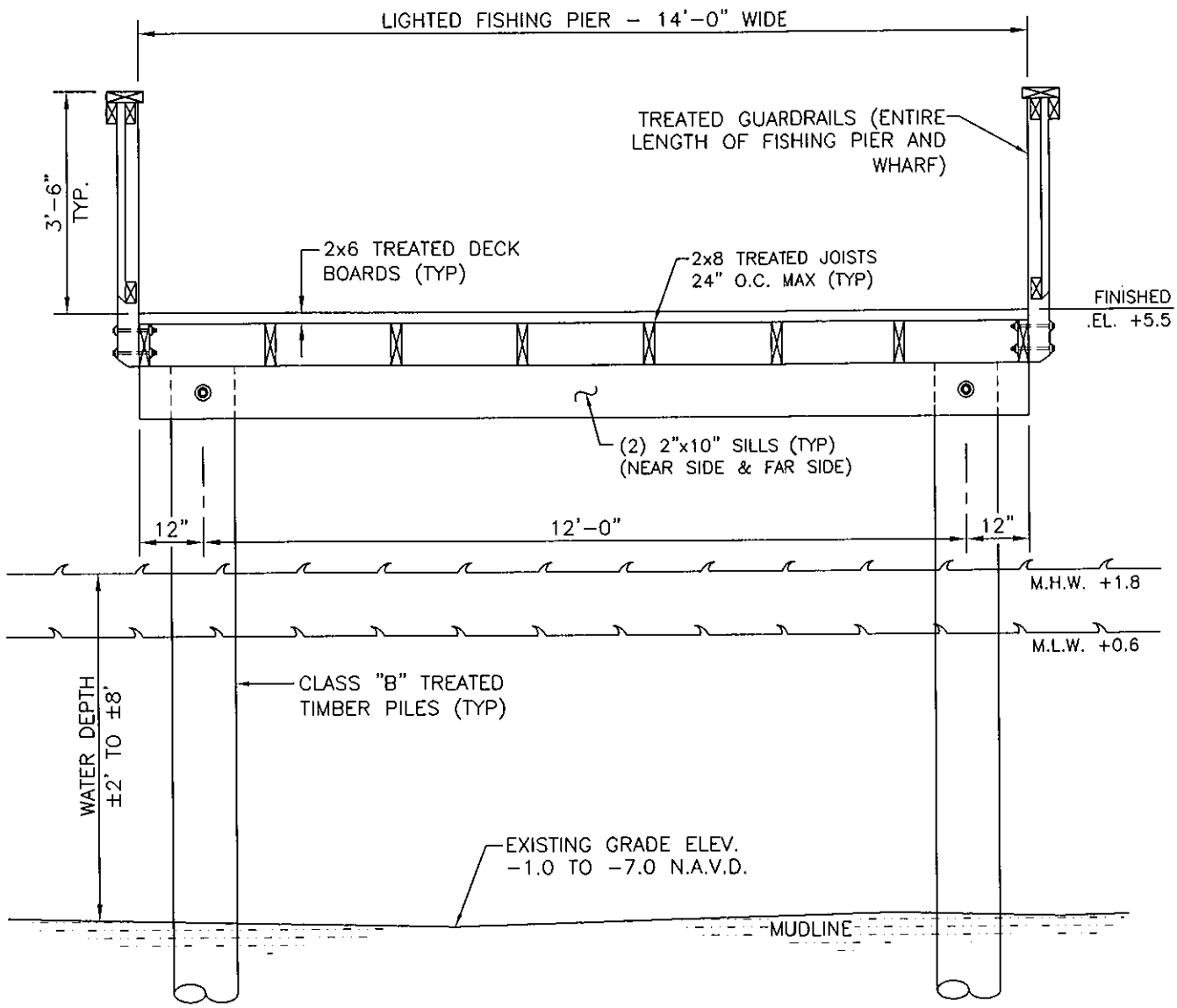

SECTION "E"–"E"

SCALE: 3/8" = 1'–0"

NOTE:
14' WIDE FISHING PIER SHOWN, 8' WHARF SIMILAR.

GENERAL NOTES:

1. ALL LUMBER UTILIZED IN THE CONSTRUCTION OF THE FISHING PIER, WHARVES AND GUARDRAILS SHALL BE SOUTHERN YELLOW PINE #2 MIN. PRESSURE TREATED.

2. ALL HARDWARE AND FASTENERS SHALL BE GALVANIZED STEEL UNLESS NOTED OTHERWISE.

BOAT DRAFTS FULLY LOADED:

1. BARGE MOUNTED BUCKET DREDGE: 3'–4'
2. TUG BOAT: 3'–4'

PICCIOLA & ASSOCIATES, INC.
CIVIL ENGINEERS · NAVAL ARCHITECTS
LAND SURVEYORS · MARINE ENGINEERS
P.O. BOX. 687
CUT OFF, LOUISIANA 70345
(985) 632-5786

J.N. 1216–0901 DATE: 08–22–2012

E:\09-DIR\12160901 LPG - Leeville Boat Launch\ACAD\CURRENT\PERMIT_REV 08-22-2012\07-SHT_PIER SECTION.dwg, FISHING PEIR, 9/7/2012 9:31:21 AM, lee