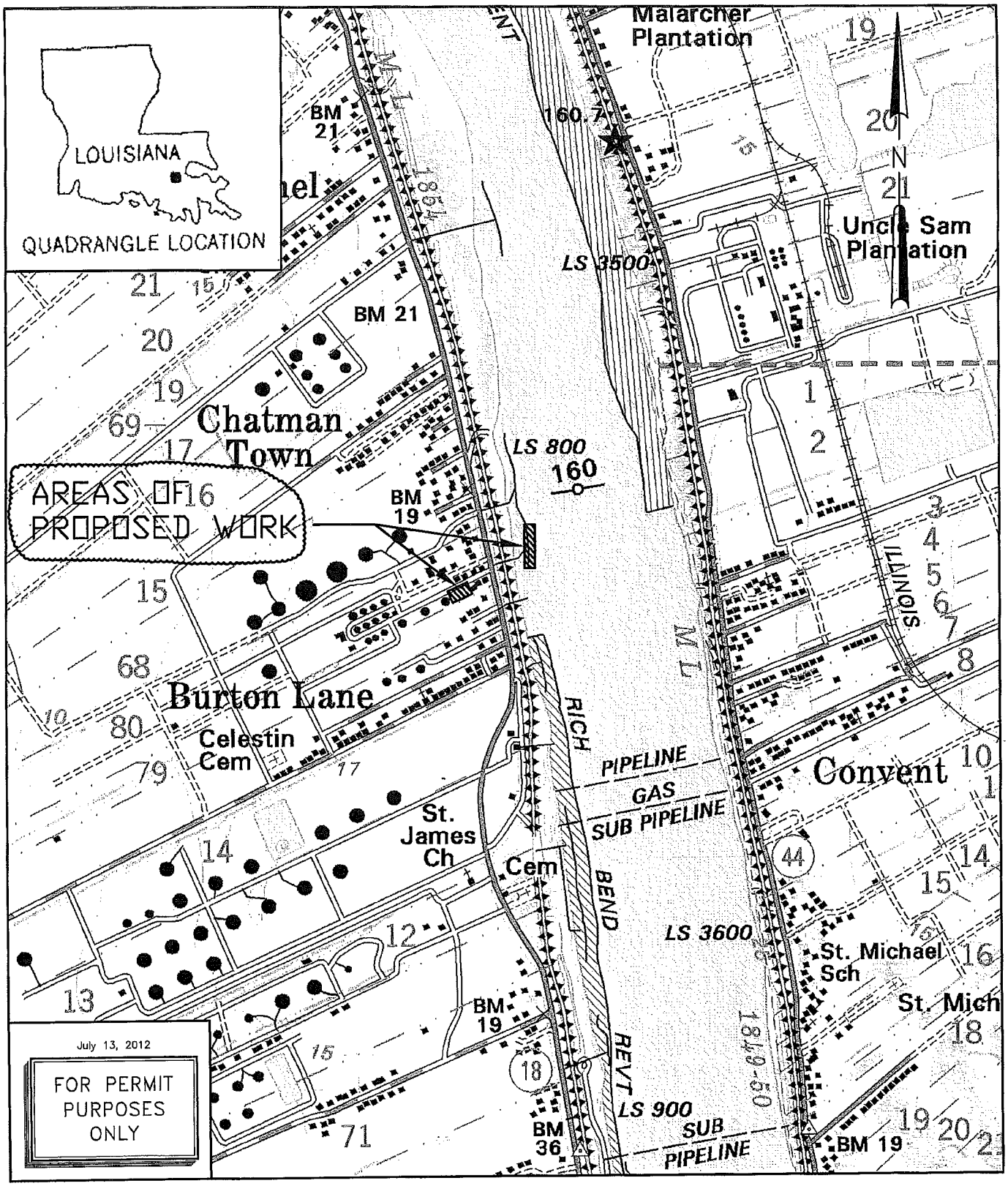

PROPOSED FACILITY IS LOCATED IN
SECTIONS 79 & 80, T12S, R16E
ST. JAMES PARISH
LAT: 30° 1' 40" LONG: 90° 50' 30"

VICINITY MAP

1"=2000'
(USGS 7.5 MINUTE MAP)

2000 0 2000
SCALE IN FEET

19920-SH-01

NUSTAR DOCK #2 IMPROVEMENT PROJECT MISSISSIPPI RIVER, RIVER MILE 160 A.H.P. ST. JAMES PARISH, ST. JAMES, LOUISIANA	JUSTIN ITTMANN ENGINEER OF RECORD 36771 LICENSE NUMBER EF-0002967 CDI ENG. LA LICENSE NUMBER	DESIGNED: JTI	DRAWN: JTI	SHEET
		PERMIT SUBMITTAL DATE: 7-13-12	CHECKED: CLM	1 OF 8
		SCALE: 1"=2000'	APPR.: JTI	

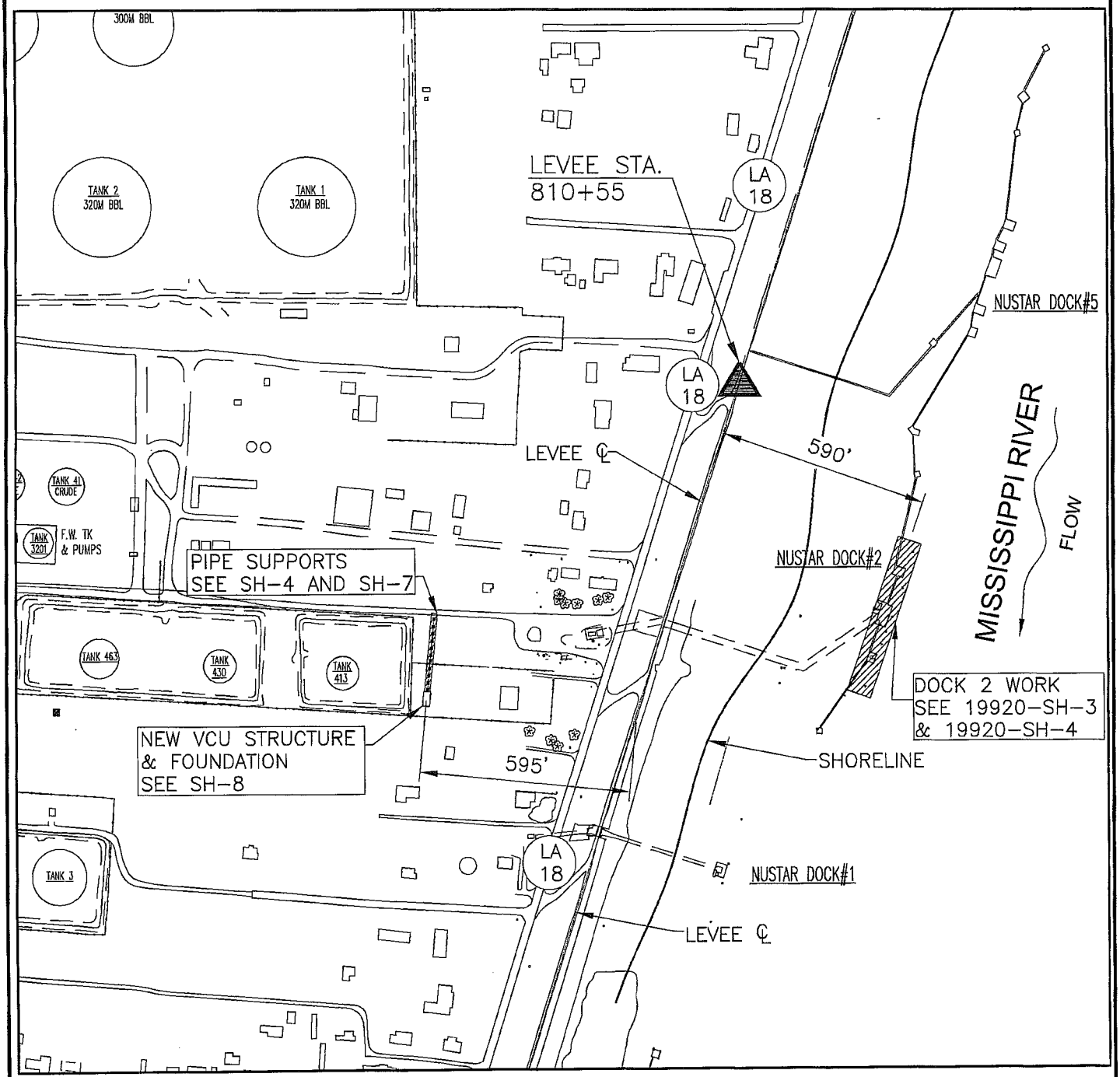

July 13, 2012

FOR PERMIT PURPOSES ONLY

SITE & WORK PLAN

1"=400'

400 0 400

SCALE IN FEET

19920-SH-02

NUSTAR DOCK #2 IMPROVEMENT PROJECT MISSISSIPPI RIVER, RIVER MILE 160 A.H.P. ST. JAMES PARISH, ST. JAMES, LOUISIANA	JUSTIN ITTMANN ENGINEER OF RECORD 36771 LICENSE NUMBER EF-0002967 CDI ENG. LA LICENSE NUMBER	DESIGNED: JTI	DRAWN: JTI	SHEET
		PERMIT SUBMITTAL DATE: 7-13-12	CHECKED: CLM	2 OF 8
		SCALE: 1"=2000'	APPR.: JTI	

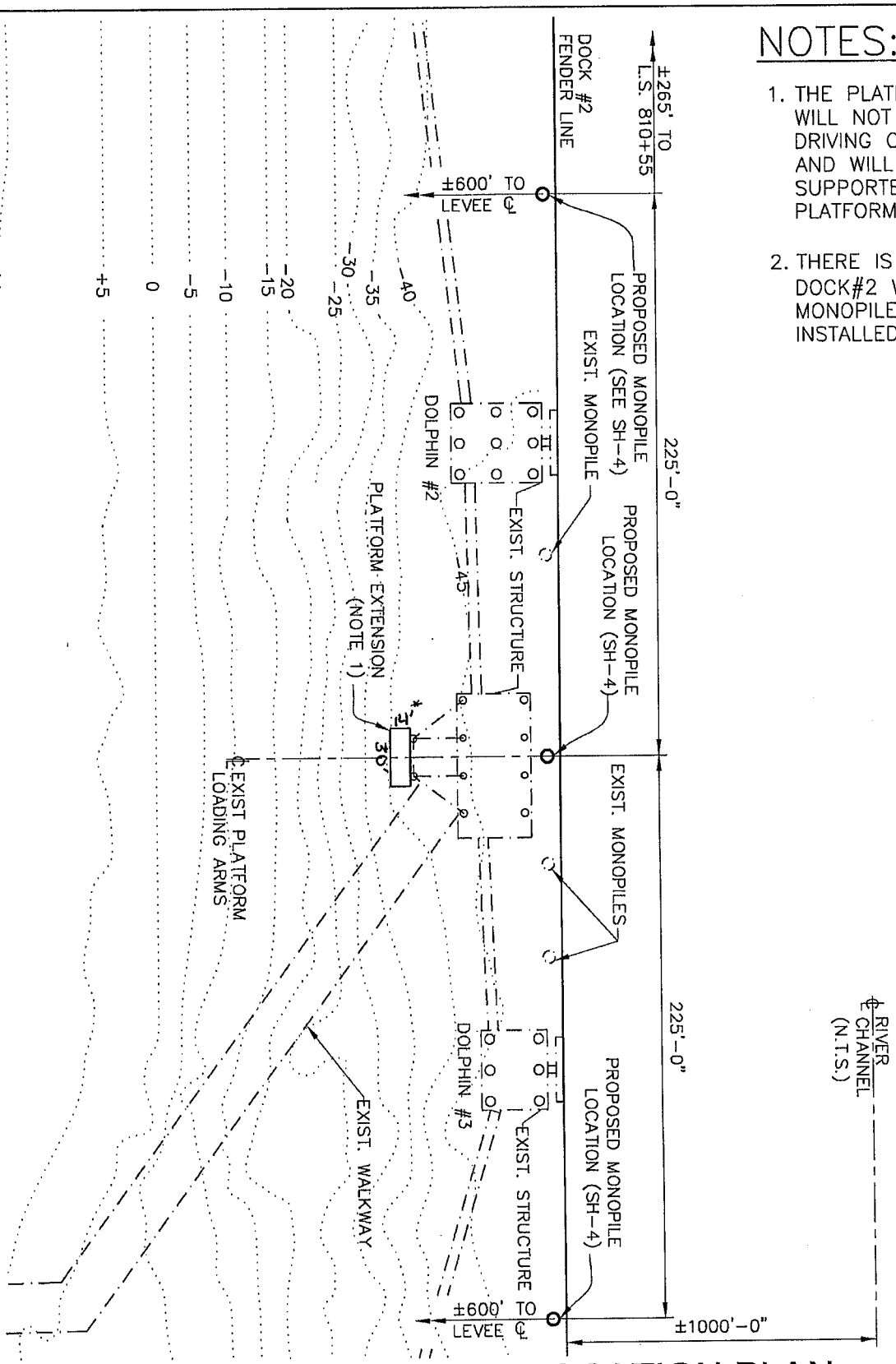

NOTES:

1. THE PLATFORM EXTENSION WILL NOT INCLUDE THE DRIVING OF ANY NEW PILES AND WILL BE ENTIRELY SUPPORTED BY THE EXISTING PLATFORM.
2. THERE IS NO REVETMENT AT DOCK#2 WHERE THE NEW MONOPILES WILL BE INSTALLED.

August 13, 2012

FOR PERMIT PURPOSES ONLY

MONOPILE LOCATION PLAN

1"=60'

(SEE 19920-SH-1 & SH-2 FOR ORIENTATION)

19920-SH-03r1

* per email dated 23 Aug 2012

NUSTAR DOCK #2 IMPROVEMENT PROJECT MISSISSIPPI RIVER, RIVER MILE 160 A.H.P. ST. JAMES PARISH, ST. JAMES, LOUISIANA	JUSTIN ITTMANN ENGINEER OF RECORD 36771 LICENSE NUMBER EF-0002967 CDI ENG. LA LICENSE NUMBER	DESIGNED: JTI PERMIT SUBMITTAL DATE: 7-13-12 SCALE: 1"=60'	DRAWN: JTI CHECKED: CLM APPR.: JTI	SHEET 3 OF 8

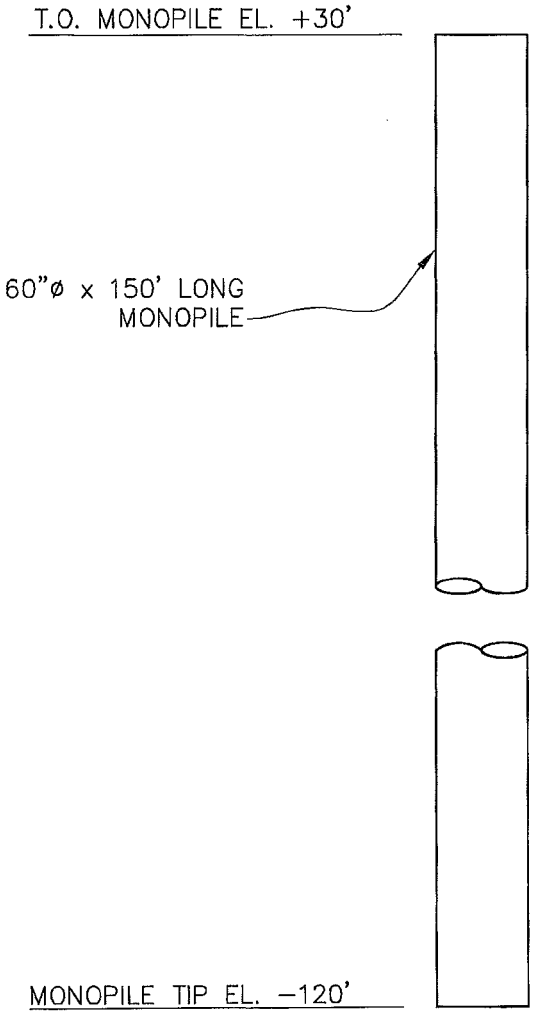

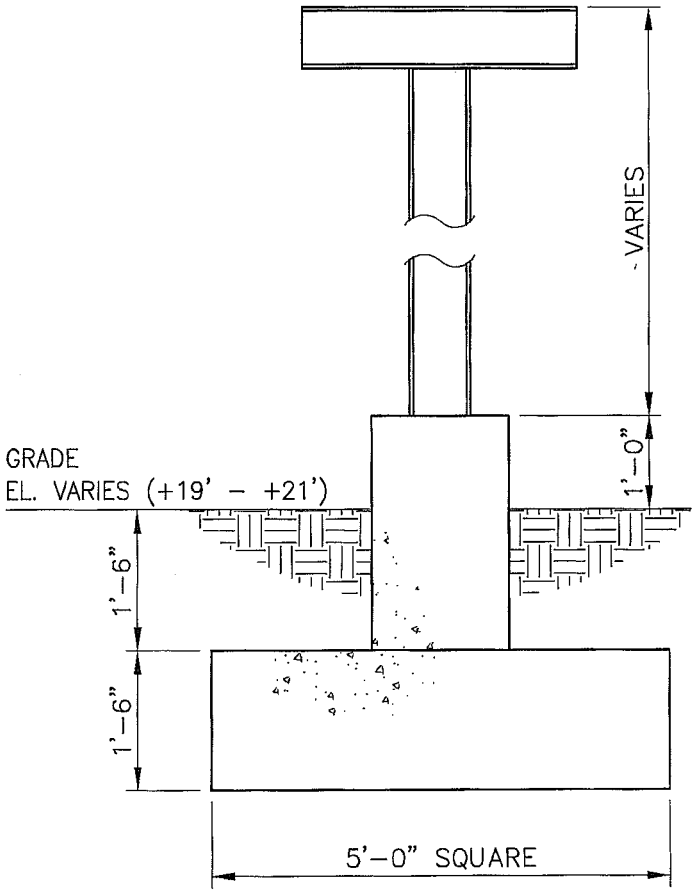

TYP. MONOPILE DETAIL

1"=10'
(SH-3)

TYP. PIPE SUPPORT DETAIL

1/2"=1'-0"
(SH-7)

July 13, 2012

FOR PERMIT PURPOSES ONLY

19920-SH-04

NUSTAR DOCK #2 IMPROVEMENT PROJECT MISSISSIPPI RIVER, RIVER MILE 160 A.H.P. ST. JAMES PARISH, ST. JAMES, LOUISIANA	JUSTIN ITTMANN ENGINEER OF RECORD 36771 LICENSE NUMBER EF-0002967 CDI ENG. LA LICENSE NUMBER	DESIGNED: JTI	DRAWN: JTI	SHEET
		PERMIT SUBMITTAL DATE: 7-13-12	CHECKED: CLM	4 OF 8
		SCALE: AS NOTED	APPR.: JTI	

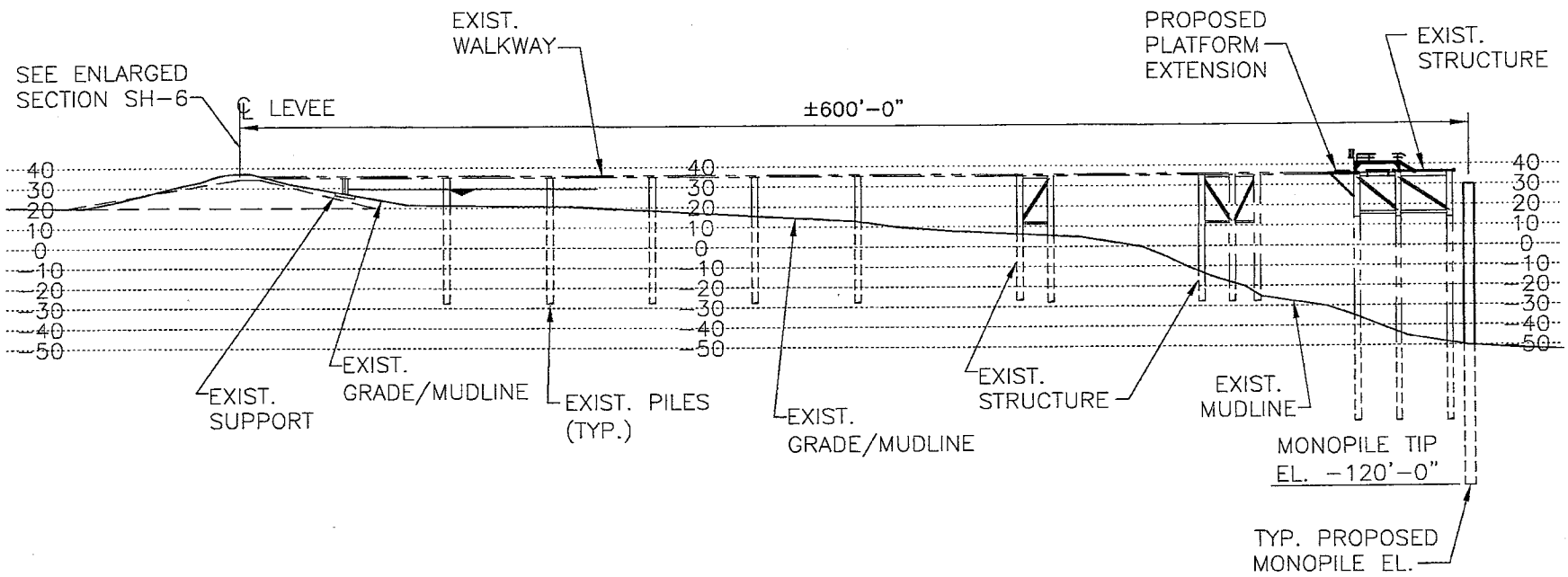

TYP. LEVEE CROSS SECTION

1"=80'

80 0 80

SCALE IN FEET

FOR PERMIT PURPOSES ONLY

August 13, 2012

19920-SH-05r1

DESIGNED: JTI	DRAWN: JTI	SHEET	5 OF 8
PERMIT SUBMITTAL DATE: 7-13-12	CHECKED: CLM		
SCALE: 1"=80'	APPR.: JTI		

JUSTIN ITTMANN
ENGINEER OF RECORD
36771
LICENSE NUMBER
EF-0002967
CDI ENG. LA LICENSE NUMBER

NUSTAR DOCK #2 IMPROVEMENT PROJECT
MISSISSIPPI RIVER, RIVER MILE 160 A.H.P.
ST. JAMES PARISH, ST. JAMES, LOUISIANA

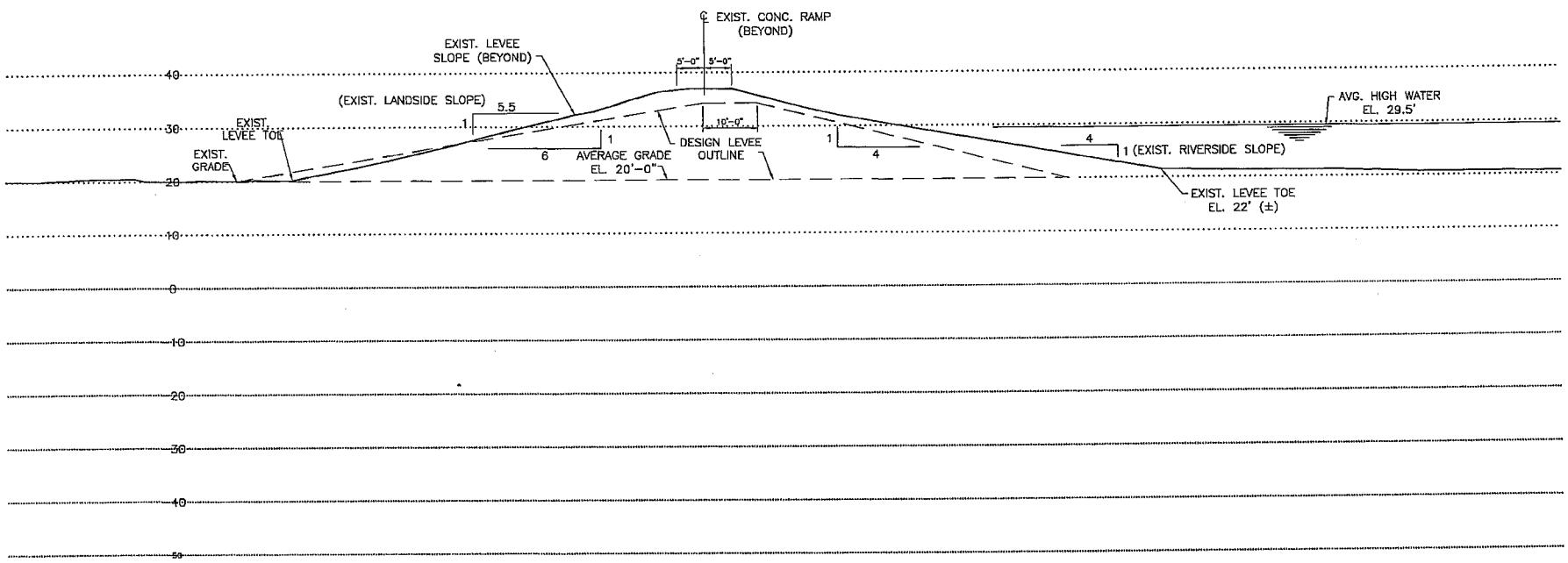

ENLARGED CROSS SECTION

1"=30'

30 0 30

SCALE IN FEET

July 13, 2012

FOR PERMIT PURPOSES ONLY

19920-SH-06

SHEET 6 OF 8

DESIGNED: JTI | DRAWN: JTI

PERMIT SUBMITTAL DATE: 7-13-12 | CHECKED: CLM

SCALE: 1"=30' | APPR.: JTI

JUSTIN ITTMANN
ENGINEER OF RECORD
36771
LICENSE NUMBER
EF-0002967
CDI ENG. LA LICENSE NUMBER

NUSTAR DOCK #2 IMPROVEMENT PROJECT
MISSISSIPPI RIVER, RIVER MILE 160 A.H.P.
ST. JAMES PARISH, ST. JAMES, LOUISIANA

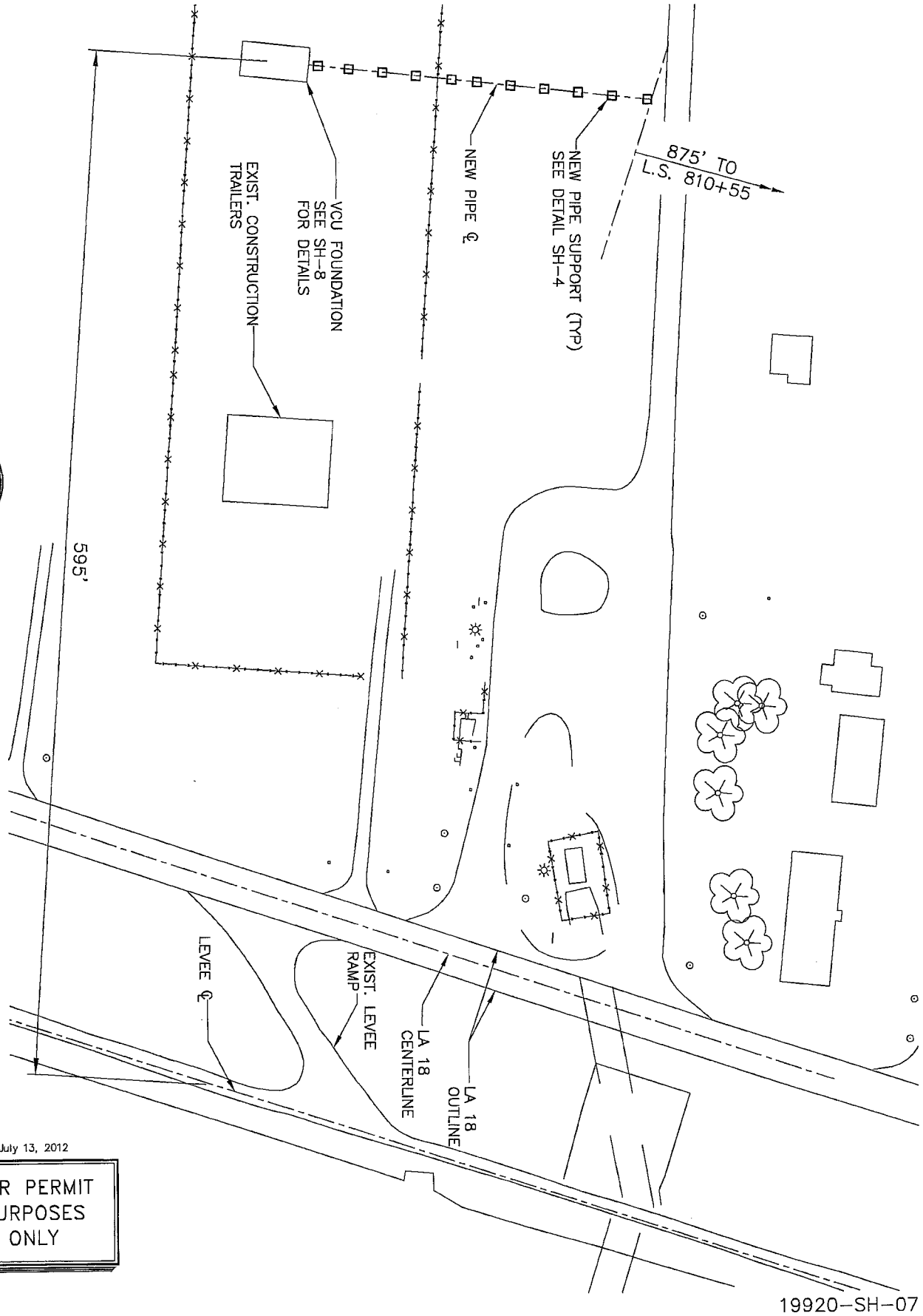

PIPE SUPPORT PLAN

1"=80'

July 13, 2012

FOR PERMIT PURPOSES ONLY

19920-SH-07

NUSTAR DOCK #2 IMPROVEMENT PROJECT MISSISSIPPI RIVER, RIVER MILE 160 A.H.P. ST. JAMES PARISH, ST. JAMES, LOUISIANA	JUSTIN ITTMANN ENGINEER OF RECORD 36771 LICENSE NUMBER EF-0002967 CDI ENG. LA LICENSE NUMBER	DESIGNED: JTI	DRAWN: JTI	SHEET
		PERMIT SUBMITTAL DATE: 7-13-12	CHECKED: CLM	7 OF 8
		SCALE: 1"=80'	APPR.: JTI	

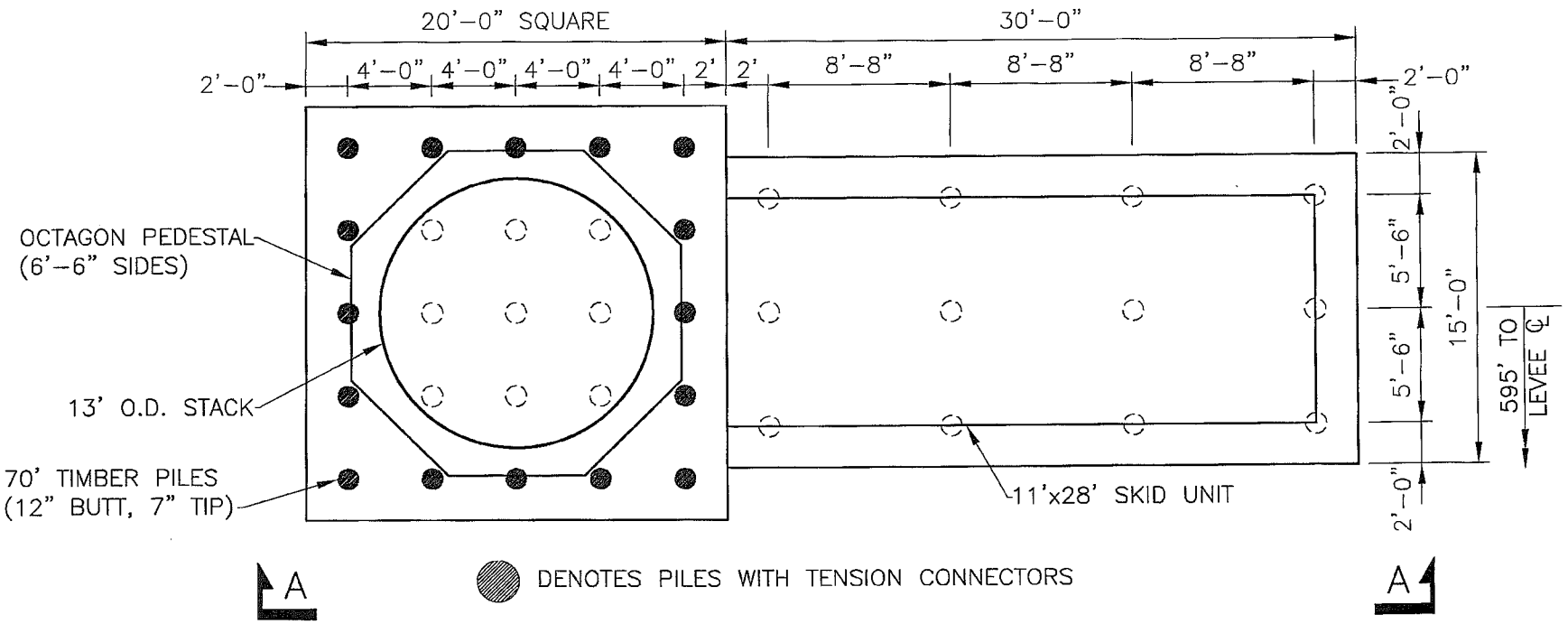

VCU FDN AND PILE PLAN

1/8"=1'-0"
(SEE SH-7 FOR ORIENT.)

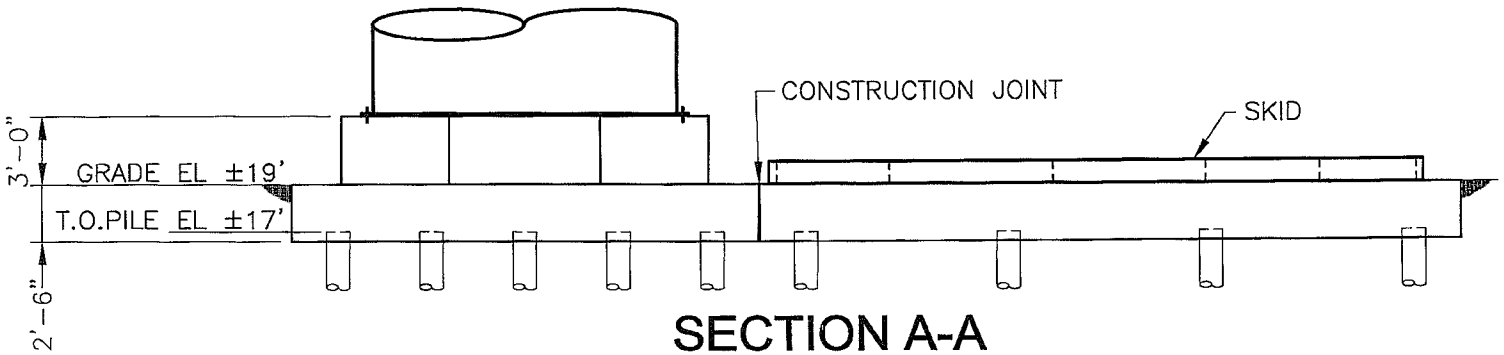

SECTION A-A

1/8"=1'-0"

July 13, 2012

FOR PERMIT PURPOSES ONLY

19920-SH-08

DESIGNED: JTI	DRAWN: JTI	SHEET	8 OF 8
PERMIT SUBMITTAL DATE: 7-13-12	CHECKED: CLM		
SCALE: AS NOTED	APPR.: JTI		

JUSTIN ITTMANN
ENGINEER OF RECORD
36771
LICENSE NUMBER
EF-0002967
CDI ENG. LA LICENSE NUMBER

NUSTAR DOCK #2 IMPROVEMENT PROJECT
MISSISSIPPI RIVER, RIVER MILE 160 A.H.P.
ST. JAMES PARISH, ST. JAMES, LOUISIANA