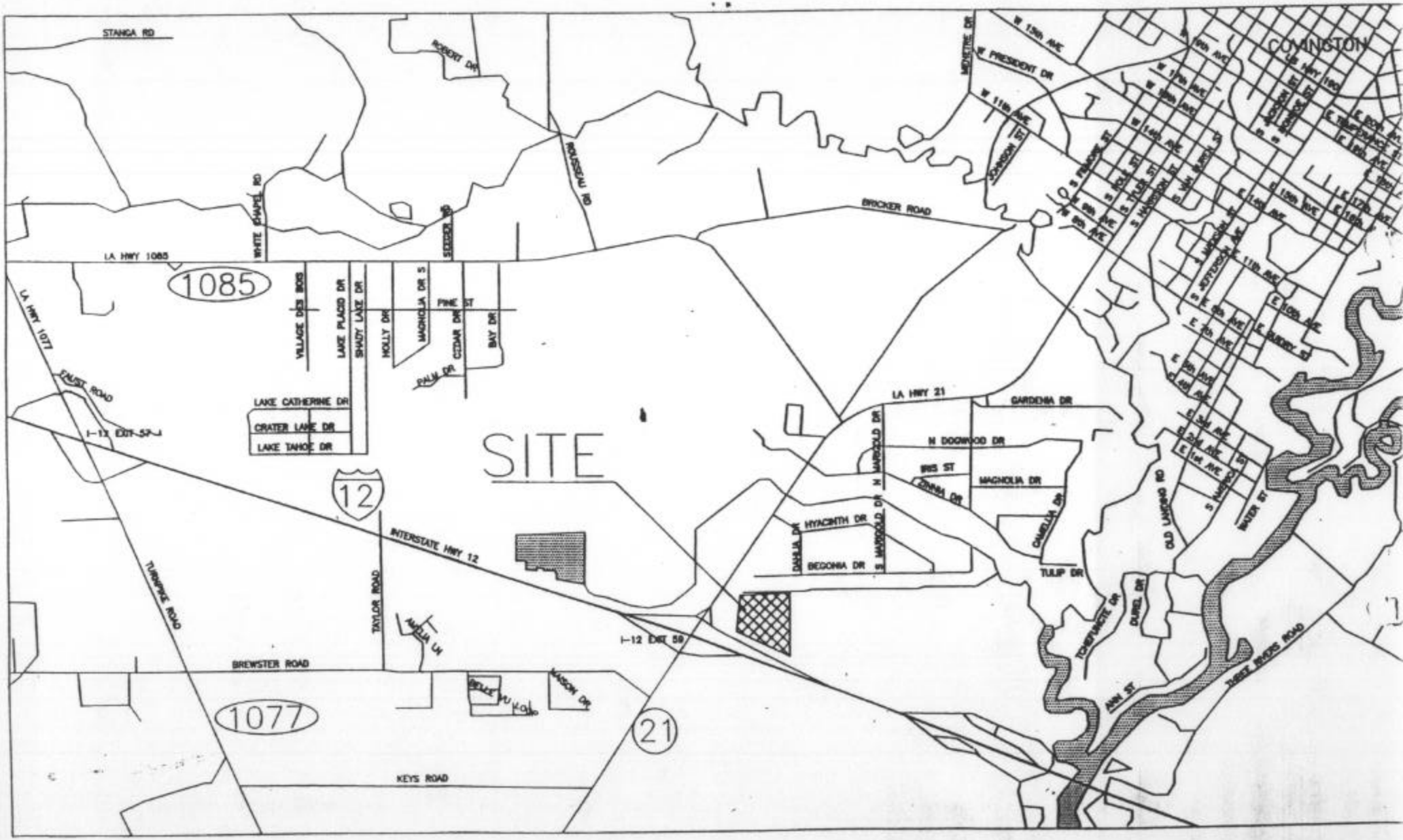

Celebrity Theaters
Section 47, T-7-S, R-10-E
St. Tammany Parish, LA

VICINITY MAP

Biological Surveys, Inc.
P.O. Box 94
Mandeville, LA 70470
(985) 893-1321

SITE LOCATION OF WETLANDS FOR THE CELEBRITY THEATER SITE LOCATED IN SECTION 47, TOWNSHIP 7 SOUTH, RANGE 11 EAST, ST. TAMMANY PARISH, STATE OF LOUISIANA

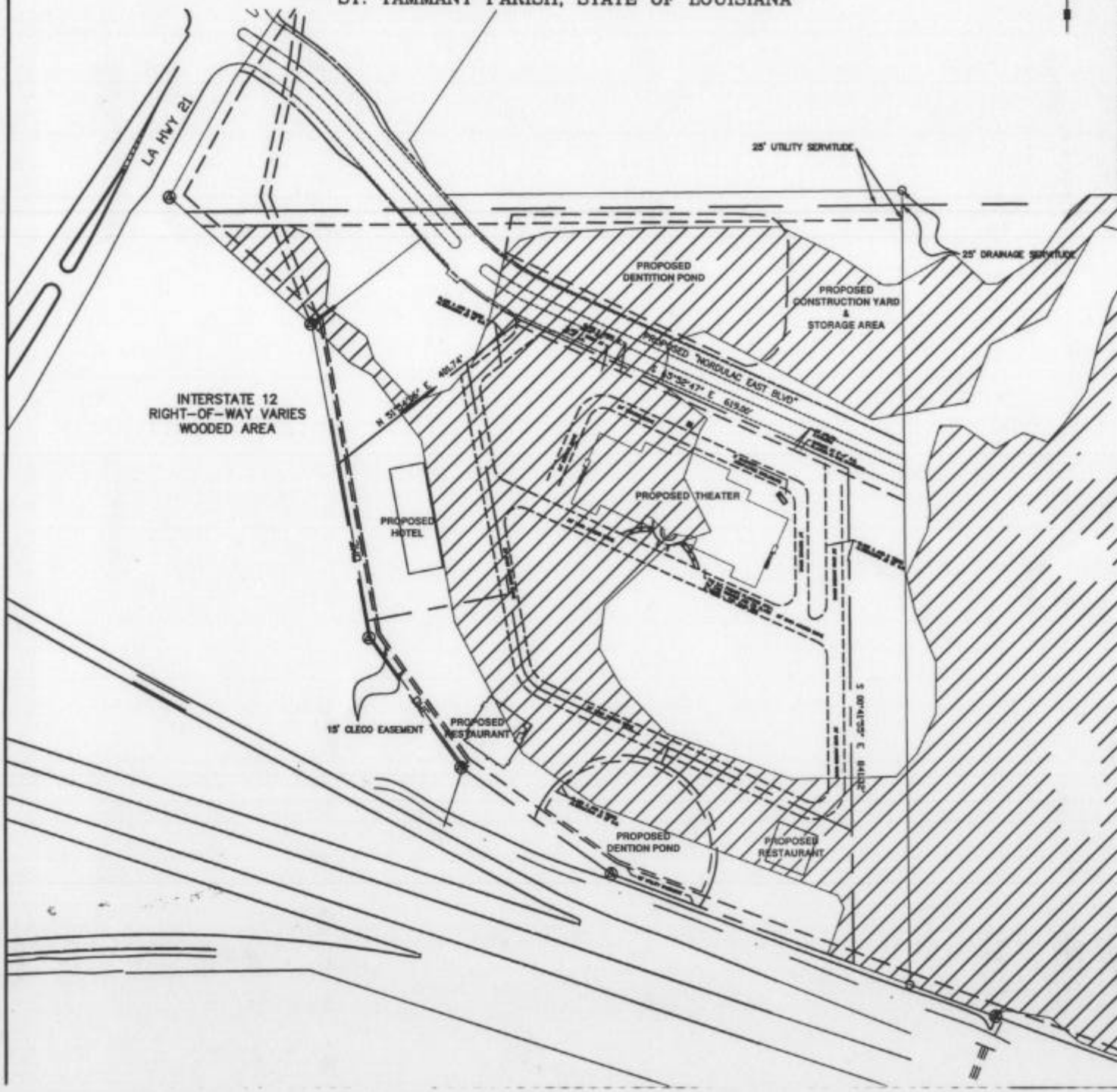

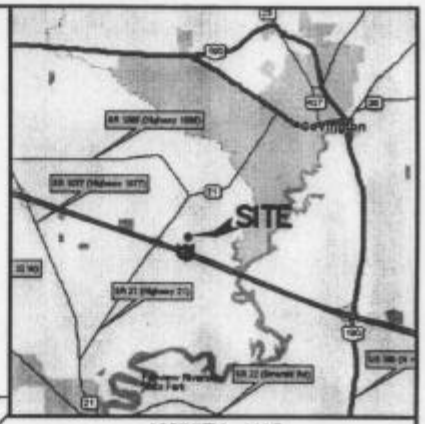

VICINITY MAP
NOT TO SCALE

REFERENCE

1. SURVEY BY: THIS FIRM DATED [illegible]

LEGEND

= WETLANDS

GENERAL NOTES

1. BEARINGS ARE BASED ON MAGNETIC NORTH.

2. THE LOCATION OF EXISTING UTILITIES ARE SHOWN IN AN APPROXIMATE WAY ONLY, THEY WERE NOT EXCAVATED TO BE ACCURATELY LOCATED. CALL LOUISIANA CALL "BOTTLE" BEFORE DIGGING. [illegible]

3. THE PROPERTY IS LOCATED WITHIN FLOOD ZONE "A" & "C" ACCORDING TO THE FEDERAL EMERGENCY MANAGEMENT AGENCY O'EMAI FLOOD INSURANCE RATE MAP (FIRM) COMMUNITY PANEL NO. [illegible] REVISED [illegible]. BASE FLOOD ELEVATION IS N/A FLOOD ZONE IS DETERMINED BY GRAPHIC PLOTTING ONLY.

4. SETBACK LINES SHALL BE VERIFIED BY OWNER OR CONTRACTOR PRIOR TO ANY CONSTRUCTION, AS AN ABSTRACT HAS NOT BEEN PERFORMED BY THE UNDERSIGNED.

5. SERVITUDES SHOWN HEREON ARE NOT NECESSARILY EXCLUSIVE. SERVITUDES OF RECORD AS SHOWN ON TITLE OPINION OR TITLE POLICY WILL BE ADDED HERETO UPON REQUEST, AS SURVEYOR HAS NOT PERFORMED ANY TITLE SEARCH OR ABSTRACT.

6. THE BOUNDARY AND TOPOGRAPHIC SURVEY SHOWN HEREON IS BASED ON ACTUAL FIELD MEASUREMENTS AND OBSERVATION DATED [illegible].

SURVEYOR'S INFORMATION

JOHN E. BONNEAU & ASSOCIATES, INC.
Professional Land Surveyors – Planners – Consultants
[illegible]

DRAWN BY	JBM
DATE	8/7/04
REVISION	DATE
CHECKED	JEB
DWG. NO.	2004279[illegible]
SCALE	1"= 250'

Survey For: WAINER BROTHERS

Property: SITE LOCATION OF WETLANDS FOR THE CELEBRITY THEATER SITE LOCATED IN SECTION 47, TOWNSHIP 7 SOUTH, RANGE 11 EAST, ST. TAMMANY PARISH, STATE OF LOUISIANA

SHEET NUMBER

WETLANDS TO BE FILLED AND EXCAVATED WITHIN THE CELEBRITY THEATER SITE LOCATED IN SECTION 47, TOWNSHIP 7 SOUTH, RANGE 11 EAST, ST. TAMMANY PARISH, STATE OF LOUISIANA

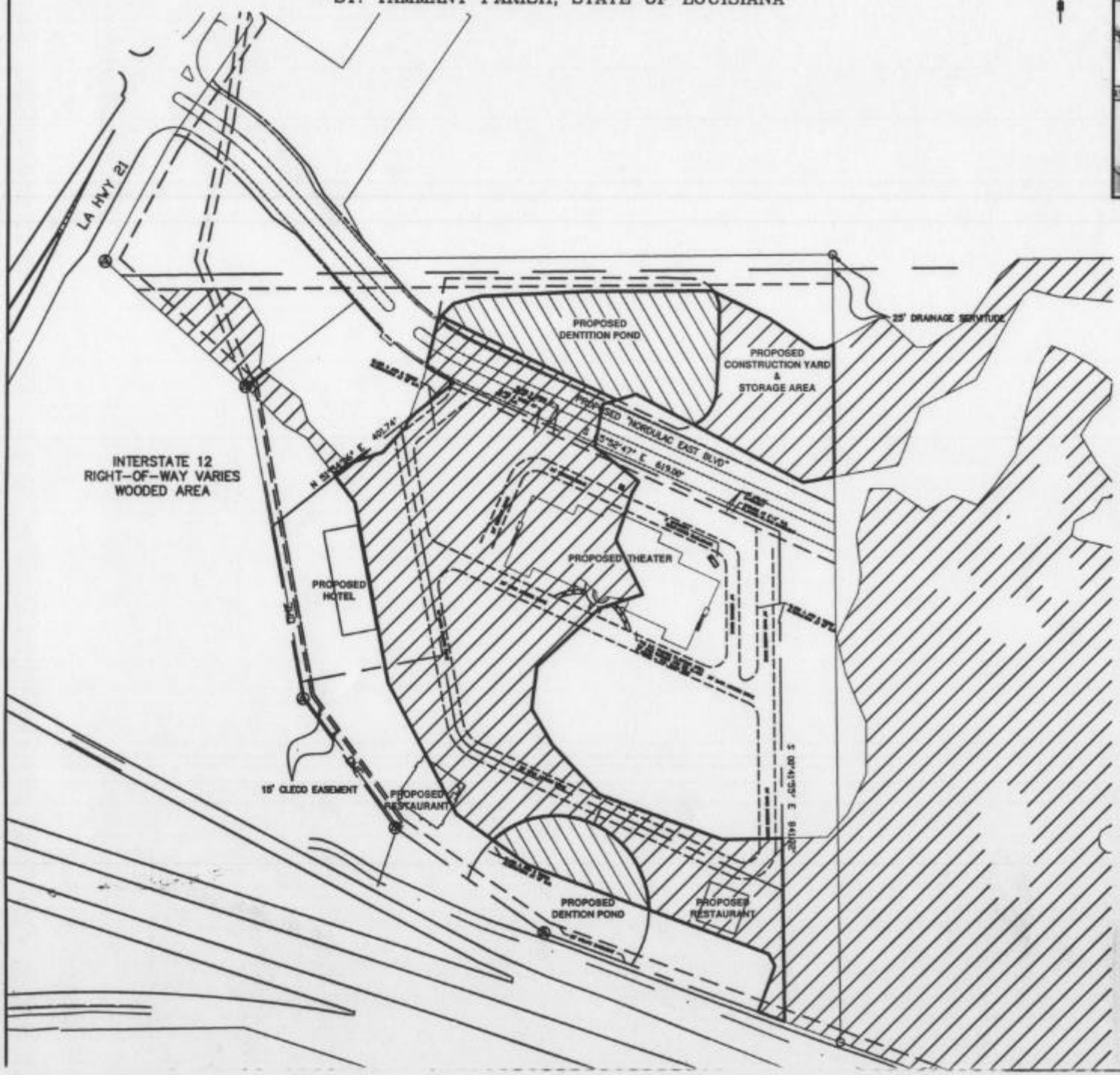

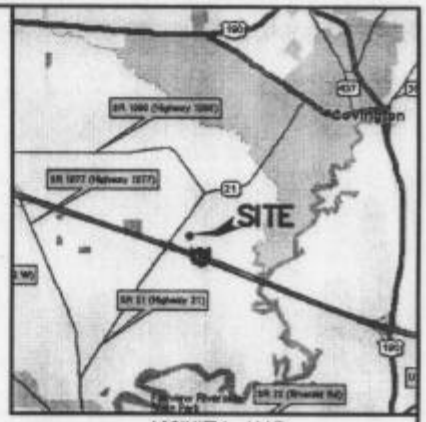

VICINITY MAP
NOT TO SCALE

REFERENCE

1. SURVEY BY: THIS FIRM DATED AUGUST 14, 1996

LEGEND

- = PROPOSED WETLANDS TO BE FILLED BEING 8.63 ACRES ±
- = PROPOSED WETLANDS TO BE EXCAVATED BEING 2.10 ACRES ±

TOTAL WETLANDS BEING 10.73 ACRES ±

GENERAL NOTES

1. BEARINGS ARE BASED ON MAGNETIC NORTH.
2. THE LOCATION OF EXISTING UTILITIES ARE SHOWN IN AN APPROXIMATE WAY ONLY, THEY WERE NOT EXCAVATED TO BE ACCURATELY LOCATED. CALL LOUISIANA CALL "ROTTIE" BEFORE DIGGING. [illegible]
3. THE PROPERTY IS LOCATED WITHIN FLOOD ZONE "A" & "C" ACCORDING TO THE FEDERAL EMERGENCY MANAGEMENT AGENCY (FEMA) FLOOD INSURANCE RATE MAP [illegible] COMMUNITY PANEL NO. [illegible] C REVISED [illegible]. BASE FLOOD ELEVATION IS N/A FLOOD ZONE IS DETERMINED BY GRAPHIC PLOTTING ONLY.
4. SETBACK LINES SHALL BE VERIFIED BY OWNER OR CONTRACTOR PRIOR TO ANY CONSTRUCTION, AS AN ABSTRACT HAS NOT BEEN PERFORMED BY THE UNDERSIGNED.
5. SERVITUDES SHOWN HEREON ARE NOT NECESSARILY EXCLUSIVE. SERVITUDES OF RECORD AS SHOWN ON TITLE OPINION OR TITLE POLICY WILL BE ADDED HERETO UPON REQUEST, AS SURVEYOR HAS NOT PERFORMED ANY TITLE SEARCH OR ABSTRACT.
6. THE BOUNDARY AND TOPOGRAPHIC SURVEY SHOWN HEREON IS BASED ON ACTUAL FIELD MEASUREMENTS AND OBSERVATION DATED [illegible].

SURVEYOR'S INFORMATION

JOHN E. BONNEAU & ASSOCIATES, INC.
Professional Land Surveyors - Planners - Consultants
[illegible]

DRAWN BY	JBM
DATE	9/7/04
REVISION	DATE
CHECKED	JEB
DWG. NO.	2004276a
SCALE	1"= 200'

Survey for: WAINER BROTHERS

Property: WETLANDS TO BE FILLED & EXCAVATED WITHIN THE CELEBRITY HEATER SITE LOCATED IN SECTION 47, TOWNSHIP 7 SOUTH, RANGE 11 EAST, ST. TAMMANY PARISH, STATE OF LOUISIANA

SHEET NUMBER

2 OF 6

DRAINAGE PLAN FOR CELEBRITY THEATER'S
IN
SECTION 47, TOWNSHIP 7 SOUTH, RANGE 11 EAST,
ST. TAMMANY PARISH, STATE OF LOUISIANA

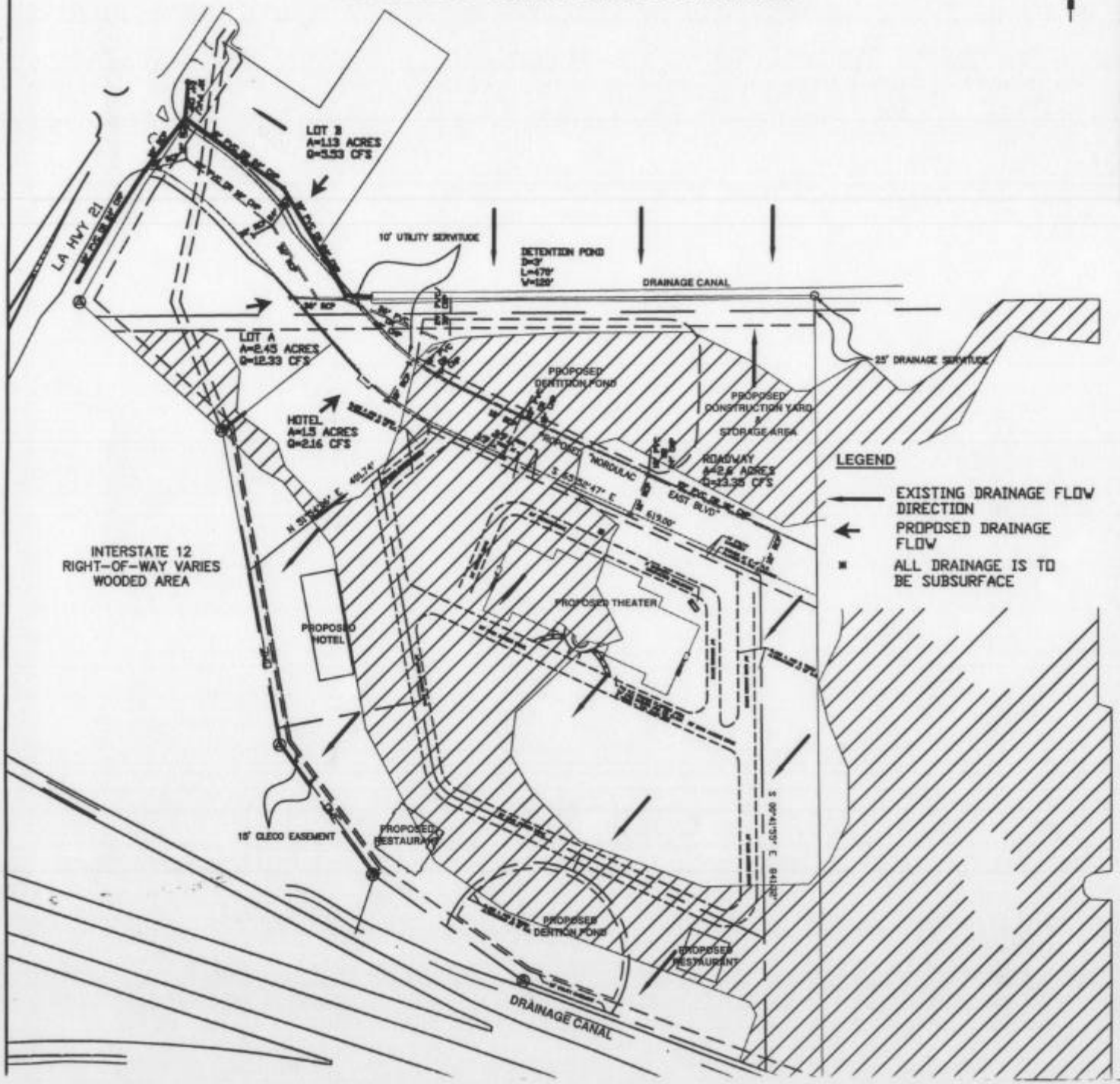

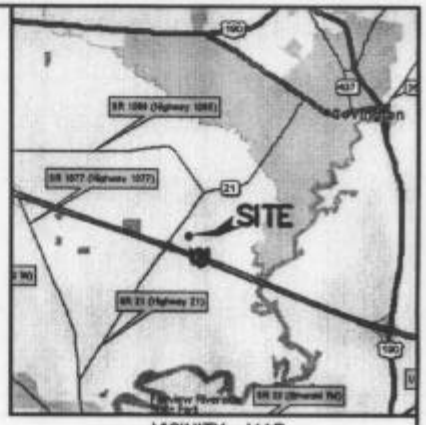

VICINITY MAP
NOT TO SCALE

REFERENCE

1. SURVEY BY THIS FIRM DATED AUGUST 14, 1996

LEGEND

= WETLANDS

= PROPOSED GRATE INLET

= PROPOSED DRAIN LINE

GENERAL NOTES

1. BEARINGS ARE BASED ON MAGNETIC NORTH.

2. THE LOCATION OF EXISTING UTILITIES ARE SHOWN IN AN APPROXIMATE WAY ONLY, THEY WERE NOT EXCAVATED TO BE ACCURATELY LOCATED. CALL LOUISIANA CALL "ROTTIE" BEFORE DIGGING. 1-800-272-3020

3. THE PROPERTY IS LOCATED WITHIN FLOOD ZONE "A" & "C" ACCORDING TO THE FEDERAL EMERGENCY MANAGEMENT AGENCY (FEMA) FLOOD INSURANCE RATE MAP (FIRM) COMMUNITY PANEL NO. 225205 0025 C REVISED 10-17-89. BASE FLOOD ELEVATION IS N/A FLOOD ZONE IS DETERMINED BY GRAPHIC PLOTTING ONLY.

4. SETBACK LINES SHALL BE VERIFIED BY OWNER OR CONTRACTOR PRIOR TO ANY CONSTRUCTION, AS AN ABSTRACT HAS NOT BEEN PERFORMED BY THE UNDERSIGNED.

5. SERVITUDES SHOWN HEREON ARE NOT NECESSARILY EXCLUSIVE. SERVITUDES OF RECORD AS SHOWN ON TITLE OPINION OR TITLE POLICY WILL BE ADDED HEREUPON UPON REQUEST, AS SURVEYOR HAS NOT PERFORMED ANY TITLE SEARCH OR ABSTRACT.

6. THE BOUNDARY AND TOPOGRAPHIC SURVEY SHOWN HEREON IS BASED ON ACTUAL FIELD MEASUREMENTS AND OBSERVATION DATED 04/27/2004.

SURVEYOR'S INFORMATION

JOHN E. BONNEAU & ASSOCIATES, INC.

Professional Land Surveyors – Planners – Consultants

DRAWN BY	JBM
DATE	6/7/04

REVISION	DATE
CHECKED	JEB

DWG. NO.	20042760
SCALE	1"= 250'

Survey for: WAINER BROTHERS

Property: DRAINAGE PLAN FOR CELEBRITY THEATER'S LOCATED IN SECTION 47, TOWNSHIP 7 SOUTH, RANGE 11 EAST, ST. TAMMANY PARISH, STATE OF LOUISIANA

CROSS SECTION DETAILS FOR SITE PLAN OF CELEBRITY THEATERS IN SECTION 47, TOWNSHIP 7 SOUTH, RANGE 11 EAST, ST. TAMMANY PARISH, STATE OF LOUISIANA

VICINITY MAP
NOT TO SCALE

REFERENCE

1. SURVEY BY: THIS FIRM DATED AUGUST 14, 1996

LEGEND

PROPOSED WETLANDS TO BE FILLED ± 8.63 ACRES

SANDY CLAY FILL= 20,875 ±

CONCRETE PAVING = 6,055 ±

GENERAL NOTES

1. BEARINGS ARE BASED ON MAGNETIC NORTH.

2. THE LOCATION OF EXISTING UTILITIES ARE SHOWN IN AN APPROXIMATE WAY ONLY, THEY WERE NOT EXCAVATED TO BE ACCURATELY LOCATED. CALL LOUISIANA CALL "BOTTIE" BEFORE DIGGING. [illegible]

3. THE PROPERTY IS LOCATED WITHIN FLOOD ZONE "A" & "C" ACCORDING TO THE FEDERAL EMERGENCY MANAGEMENT AGENCY O'ENAU FLOOD INSURANCE RATE MAP (FIRM) COMMUNITY PANEL NO. [illegible] REVISED [illegible]. BASE FLOOD ELEVATION IS N/A FLOOD ZONE IS DETERMINED BY GRAPHIC PLOTTING ONLY.

4. SETBACK LINES SHALL BE VERIFIED BY OWNER OR CONTRACTOR PRIOR TO ANY CONSTRUCTION, AS AN ABSTRACT HAS NOT BEEN PERFORMED BY THE UNDERSIGNED.

5. SERVITUDES SHOWN HEREON ARE NOT NECESSARILY EXCLUSIVE. SERVITUDES OF RECORD AS SHOWN ON TITLE OPINION OR TITLE POLICY WILL BE ADDED HERETO UPON REQUEST, AS SURVEYOR HAS NOT PERFORMED ANY TITLE SEARCH OR ABSTRACT.

6. THE BOUNDARY AND TOPOGRAPHIC SURVEY SHOWN HEREON IS BASED ON ACTUAL FIELD MEASUREMENTS AND OBSERVATION DATED [illegible].

SURVEYOR'S INFORMATION

JOHN E. BONNEAU & ASSOCIATES, INC.

Professional Land Surveyors – Planners – Consultants

[illegible]

DRAWN BY	JBM
DATE	8/7/04
REVISION	DATE
CHECKED	JEB
DWG. NO.	2004276a
SCALE	NONE

Survey for: WAINER BROTHERS

Property: CROSS SECTION DETAIL OF WETLANDS FILL FOR SITE PLAN OF CELEBRITY THEATERS LOCATED IN SECTION 47, TOWNSHIP 7 SOUTH, RANGE 11 EAST, ST. TAMMANY PARISH, STATE OF LOUISIANA

SHEET NUMBER

4 OF 6

CROSS SECTION DETAILS FOR SITE PLAN OF CELEBRITY THEATERS IN SECTION 47, TOWNSHIP 7 SOUTH, RANGE 11 EAST, ST. TAMMANY PARISH, STATE OF LOUISIANA

VICINITY MAP
NOT TO SCALE

CROSS SECTION "A–A"

NOT TO SCALE

CROSS SECTION "B–B"

NOT TO SCALE

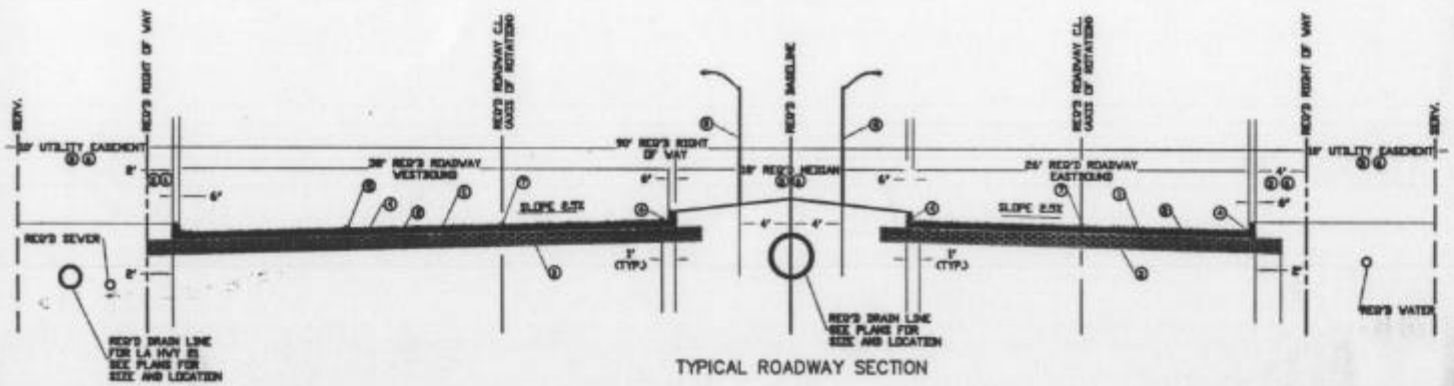

TYPICAL ROADWAY SECTION

REFERENCE

1. SURVEY BY: THIS FIRM DATED AUGUST 14, 1996

LEGEND

PROPOSED WETLANDS TO BE FILLED ±
8.63 ACRES

SANDY CLAY FILL= 20,875 ±

CONCRETE PAVING = 6,055 ±

GENERAL NOTES

1. BEARINGS ARE BASED ON MAGNETIC NORTH.

2. THE LOCATION OF EXISTING UTILITIES ARE SHOWN IN AN APPROXIMATE WAY ONLY, THEY WERE NOT EXCAVATED TO BE ACCURATELY LOCATED. CALL LOUISIANA CALL "BOTTIE" BEFORE DIGGING. [illegible]

3. THE PROPERTY IS LOCATED WITHIN FLOOD ZONE "A" & "C" ACCORDING TO THE FEDERAL EMERGENCY MANAGEMENT AGENCY (FEMA) FLOOD INSURANCE RATE MAP (FIRM) COMMUNITY PANEL NO. [illegible] C REVISED [illegible]. BASE FLOOD ELEVATION IS N/A FLOOD ZONE IS DETERMINED BY GRAPHIC PLOTTING ONLY.

4. SETBACK LINES SHALL BE VERIFIED BY OWNER OR CONTRACTOR PRIOR TO ANY CONSTRUCTION, AS AN ABSTRACT HAS NOT BEEN PERFORMED BY THE UNDERSIGNED.

5. SERVITUDES SHOWN HEREON ARE NOT NECESSARILY EXCLUSIVE. SERVITUDES OF RECORD AS SHOWN ON TITLE OPINION OR TITLE POLICY WILL BE ADDED HERETO UPON REQUEST, AS SURVEYOR HAS NOT PERFORMED ANY TITLE SEARCH OR ABSTRACT.

6. THE BOUNDARY AND TOPOGRAPHIC SURVEY SHOWN HEREON IS BASED ON ACTUAL FIELD MEASUREMENTS AND OBSERVATION DATED [illegible].

SURVEYOR'S INFORMATION

JOHN E. BONNEAU & ASSOCIATES, INC.
Professional Land Surveyors – Planners – Consultants
[illegible]

DRAWN BY	JBM
DATE	8/7/04
REVISION	DATE
CHECKED	JEB
DWG. NO.	2004278a
SCALE	NONE

Survey for: WAINER BROTHERS

Property: CROSS SECTION DETAIL OF WETLANDS FILL FOR SITE PLAN OF CELEBRITY THEATERS LOCATED IN SECTION 47, TOWNSHIP 7 SOUTH, RANGE 11 EAST, ST. TAMMANY PARISH, STATE OF LOUISIANA

SHEET NUMBER

CROSS SECTION DETAILS FOR SITE PLAN OF CELEBRITY THEATERS IN SECTION 47, TOWNSHIP 7 SOUTH, RANGE 11 EAST, ST. TAMMANY PARISH, STATE OF LOUISIANA

CROSS SECTION "C–C"

NOT TO SCALE

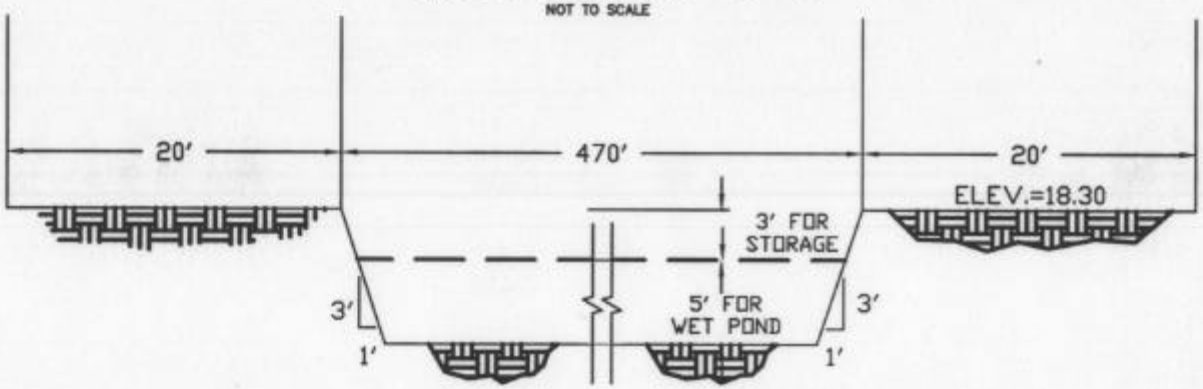

CROSS SECTION "D–D"

NOT TO SCALE

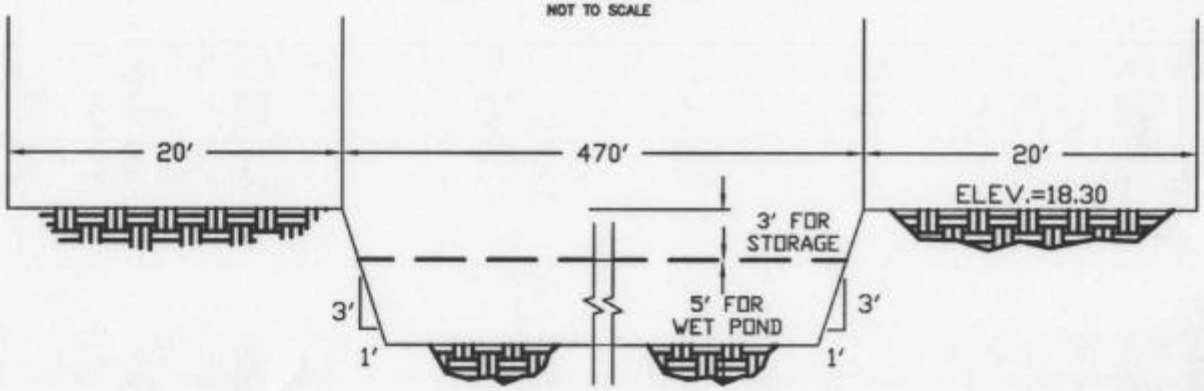

TYPICAL DITCH CROSS SECTION

NOT TO SCALE

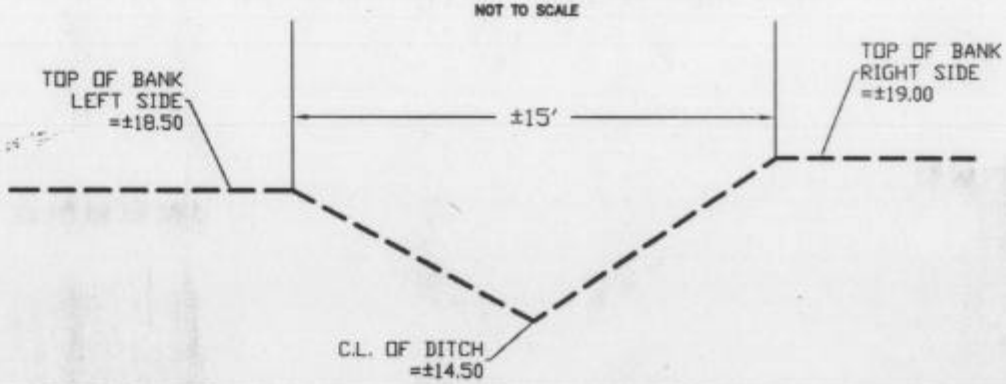

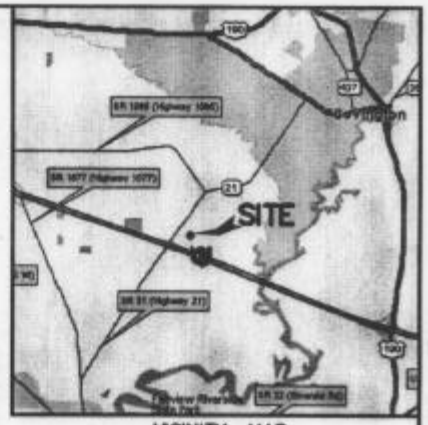

VICINITY MAP

NOT TO SCALE

REFERENCE

1. SURVEY BY: THIS FIRM DATED AUGUST 14, 1996

LEGEND

GENERAL NOTES

1. BEARINGS ARE BASED ON MAGNETIC NORTH.

2. THE LOCATION OF EXISTING UTILITIES ARE SHOWN IN AN APPROXIMATE WAY ONLY, THEY WERE NOT EXCAVATED TO BE ACCURATELY LOCATED. CALL LOUISIANA CALL "BOTTIE" BEFORE DIGGING. [illegible]

3. THE PROPERTY IS LOCATED WITHIN FLOOD ZONE "A" & "C" ACCORDING TO THE FEDERAL EMERGENCY MANAGEMENT AGENCY (FEMA) FLOOD INSURANCE RATE MAP (FIRM) COMMUNITY PANEL NO. [illegible] REVISED [illegible]. BASE FLOOD ELEVATION IS N/A FLOOD ZONE IS DETERMINED BY GRAPHIC PLOTTING ONLY.

4. SETBACK LINES SHALL BE VERIFIED BY OWNER OR CONTRACTOR PRIOR TO ANY CONSTRUCTION, AS AN ABSTRACT HAS NOT BEEN PERFORMED BY THE UNDERSIGNED.

5. SERVITUDES SHOWN HEREON ARE NOT NECESSARILY EXCLUSIVE. SERVITUDES OF RECORD AS SHOWN ON TITLE OPINION OR TITLE POLICY WILL BE ADDED HERETO UPON REQUEST, AS SURVEYOR HAS NOT PERFORMED ANY TITLE SEARCH OR ABSTRACT.

6. THE BOUNDARY AND TOPOGRAPHIC SURVEY SHOWN HEREON IS BASED ON ACTUAL FIELD MEASUREMENTS AND OBSERVATION DATED [illegible].

SURVEYOR'S INFORMATION

JOHN E. BONNEAU & ASSOCIATES, INC.

Professional Land Surveyors – Planners – Consultants

[illegible]

DRAWN BY	JBM
DATE	9/7/04
REVISION	DATE
CHECKED	JEB
DWG. NO.	2004276a
SCALE	NONE

Survey For: WAINER BROTHERS

Property: CROSS SECTION DETAIL OF WETLANDS FILL FOR SITE PLAN OF CELEBRITY THEATERS LOCATED IN SECTION 47, TOWNSHIP 7 SOUTH, RANGE 11 EAST, ST. TAMMANY PARISH, STATE OF LOUISIANA

SHEET NUMBER

6 OF 6