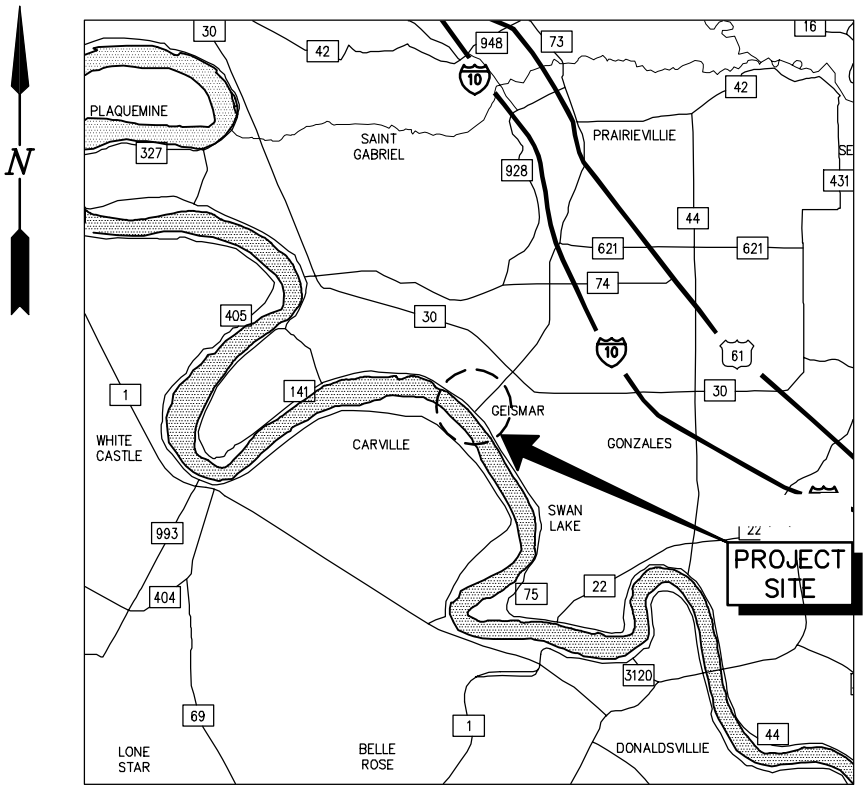

VICINITY MAP

GRAPHIC SCALE IN MILES

0 4 8 12

LAT.: 30°10'43.36"N
LON.: 91°0'29.50"W

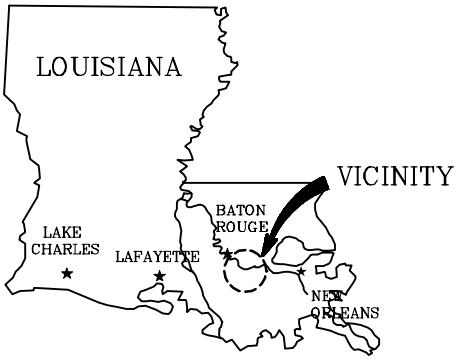

AREA MAP

9025-P1

LANIER & ASSOCIATES
CONSULTING ENGINEERS
INCORPORATED
NEW ORLEANS, LA · BEAUMONT, TX

SHELL US GAS AND POWER, LLC
GEISMAR LOUISIANA

SHELL US GAS AND POWER, LLC
PROPOSED BARGE DOCK
AREA & VICINITY MAPS

DATE OCT. '12
DESIGN BMG
DRAWN WGL
CHECK JTM
CONTRACT 9025
SHEET No.
1 OF 15

LANIER & ASSOCIATES
CONSULTING ENGINEERS
INCORPORATED
NEW ORLEANS, LA · BEAUMONT, TX

SHELL US GAS AND POWER, LLC
GEISMAR LOUISIANA

SHELL US GAS AND POWER, LLC
PROPOSED BARGE DOCK
OVERALL SITE PLAN

DATE OCT. '12
DESIGN BMG
DRAWN WGL
CHECK JTM
CONTRACT 9025
SHEET No.
2 OF 15

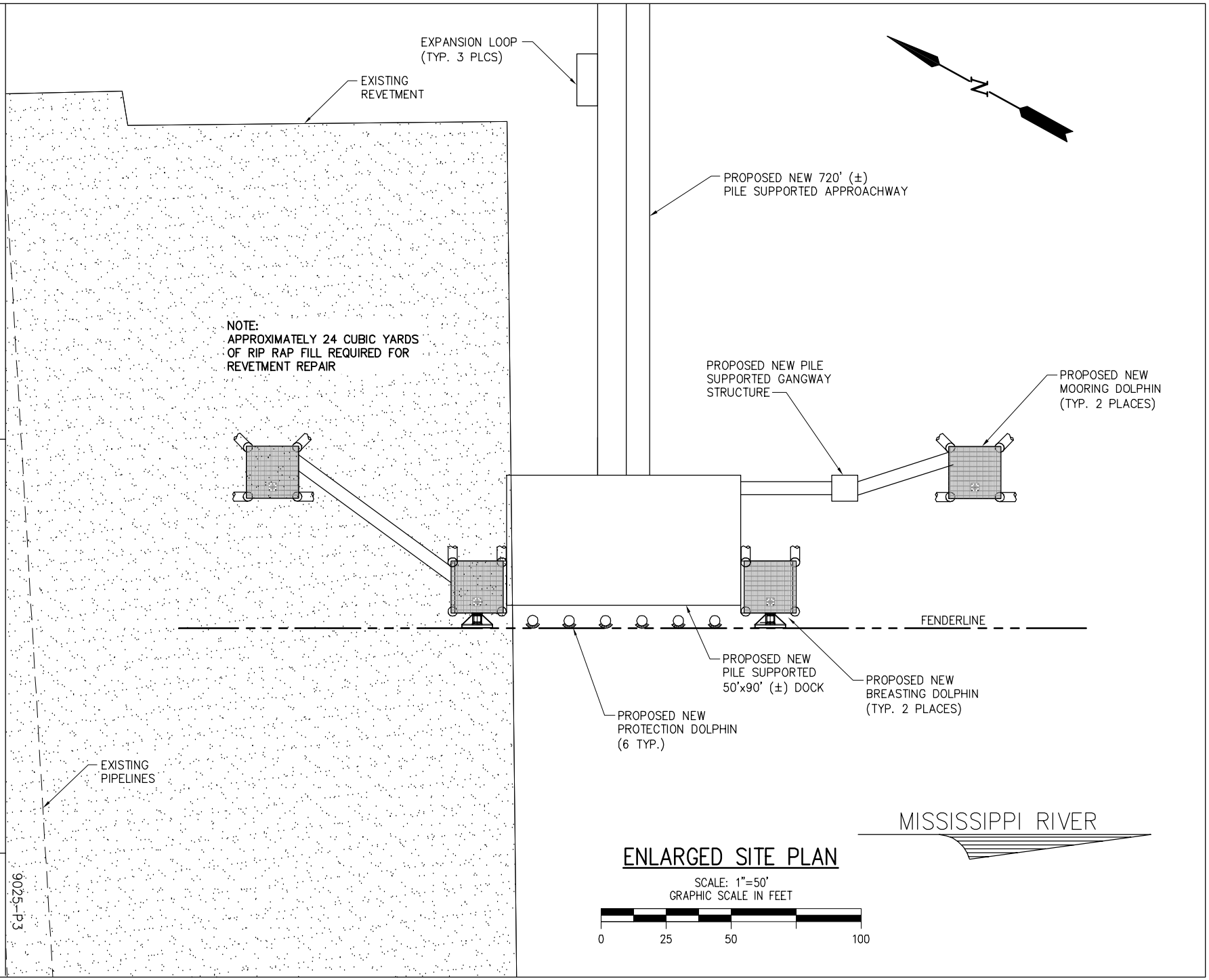

LANIER & ASSOCIATES
CONSULTING ENGINEERS
INCORPORATED
NEW ORLEANS, LA · BEAUMONT, TX

CESMAR

SHELL CHEMICAL LP

LOUISIANA

SHELL CHEMICAL LP
PROPOSED BARGE DOCK
ENLARGED SITE PLAN

DATE OCT. '12
DESIGN BMG
DRAWN WGL
CHECK JTM
CONTRACT 9025
SHEET No.
3 OF **15**

9025-P3

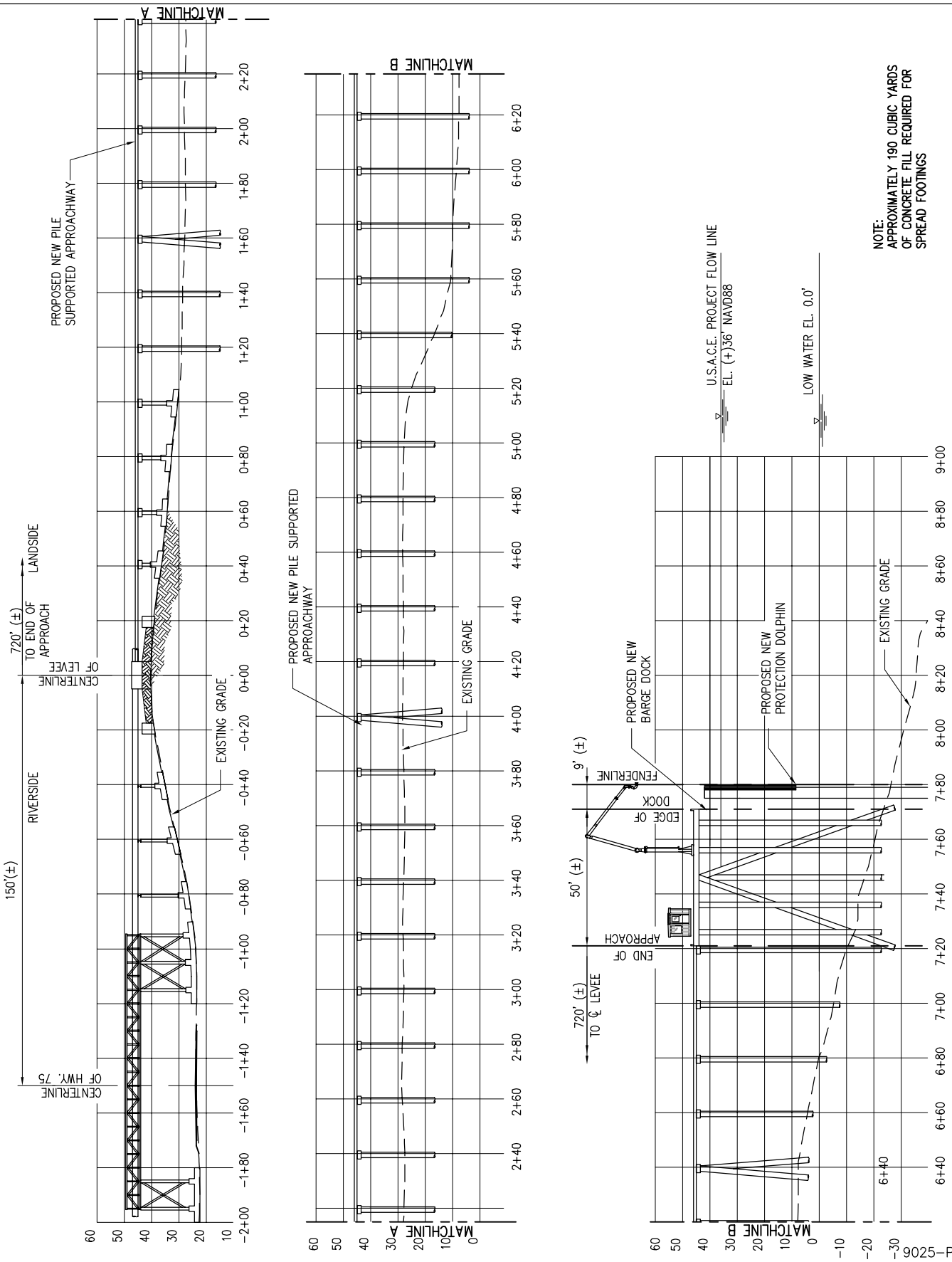

LANIER & ASSOCIATES
CONSULTING ENGINEERS
INCORPORATED
NEW ORLEANS, LA · BEAUMONT, TX

SHELL US GAS AND POWER, LLC
GEISMAR LOUISIANA

SHELL US GAS AND POWER, LLC
PROPOSED BARGE DOCK
CROSS SECTION

DATE OCT. '12
DESIGN BMG
DRAWN WGL
CHECK JTM
CONTRACT 9025
SHEET No.
4 OF 15

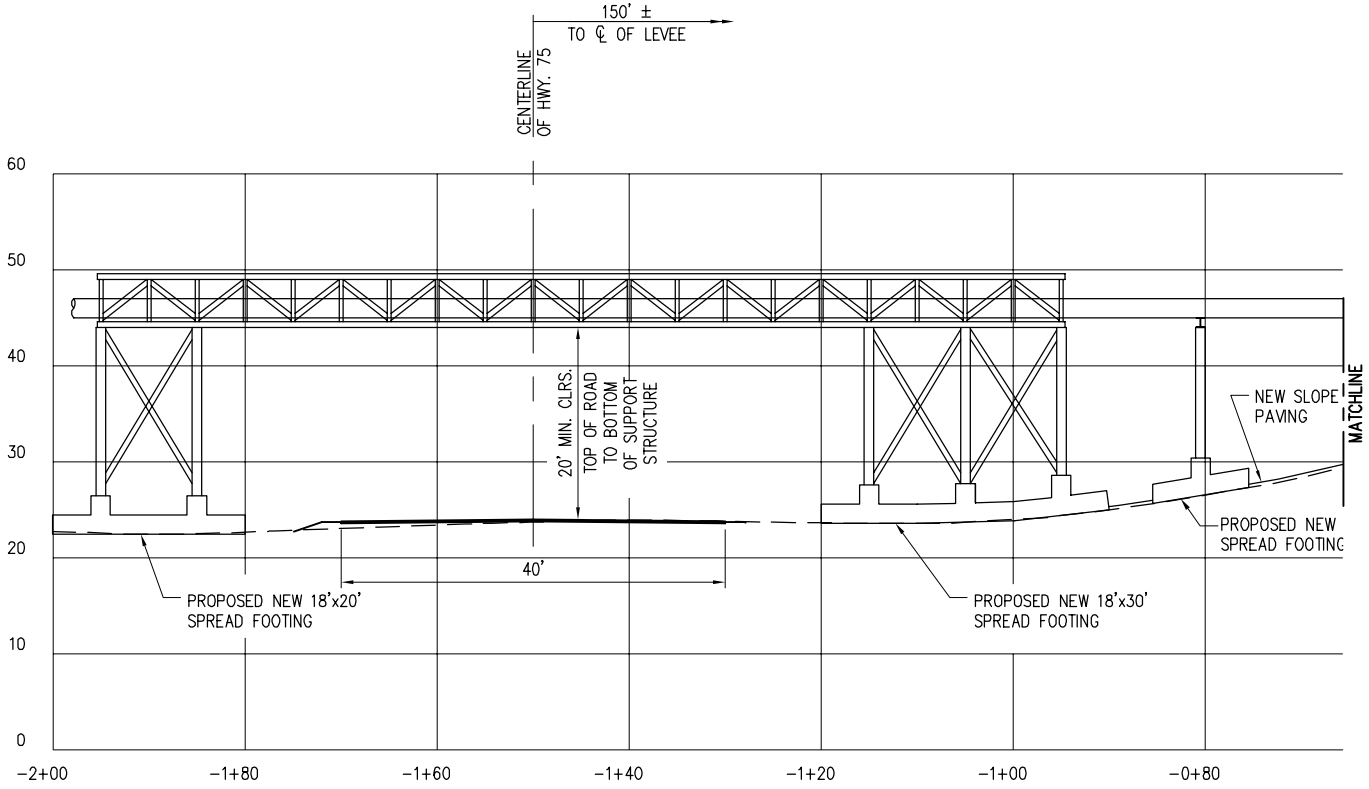

ROAD SECTION

SCALE: 1"=20'

NOTE:
APPROXIMATELY 190 CUBIC YARDS OF CONCRETE FILL REQUIRED FOR SPREAD FOOTINGS

LANIER & ASSOCIATES
CONSULTING ENGINEERS
INCORPORATED
NEW ORLEANS, LA · BEAUMONT, TX

SHELL US GAS AND POWER, LLC
GESMAR LOUISIANA

SHELL US GAS AND POWER, LLC
PROPOSED BARGE DOCK
ROAD SECTION

DATE OCT. '12
DESIGN BMG
DRAWN WGL
CHECK JTM
CONTRACT 9025
SHEET No. 5 OF 15

9025-P5

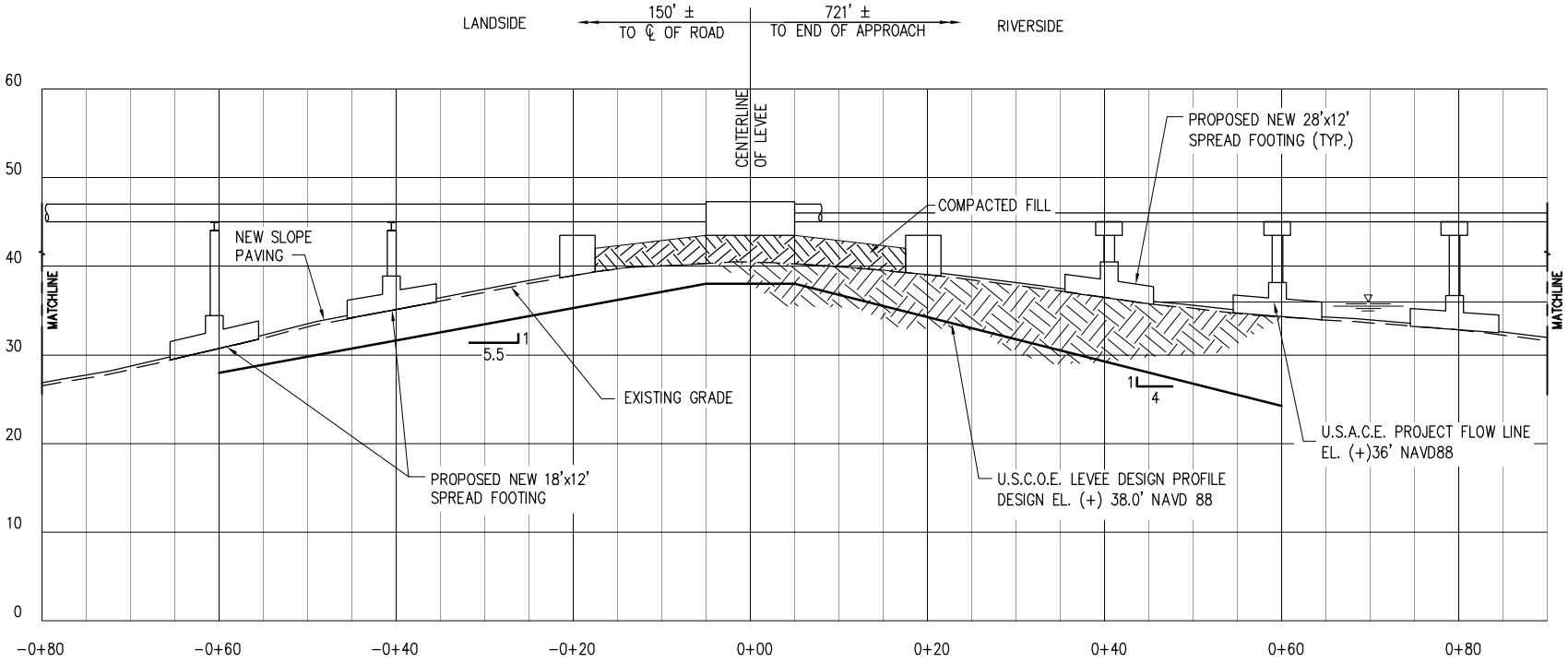

LEVEE SECTION @ STATION U.S.A.C.E. 2356+20

SCALE: 1"=20'

NOTE:
APPROXIMATELY 190 CUBIC YARDS OF CONCRETE FILL REQUIRED FOR SPREAD FOOTINGS

9025-P6

LANIER & ASSOCIATES
CONSULTING ENGINEERS
INCORPORATED
NEW ORLEANS, LA · BEAUMONT, TX

SHELL US GAS AND POWER, LLC
GEISMAR LOUISIANA

SHELL US GAS AND POWER, LLC
PROPOSED BARGE DOCK
LEVEE SECTION @ STATION 2356+20

DATE OCT. '12
DESIGN BMG
DRAWN WGL
CHECK JTM
CONTRACT 9025
SHEET No. 6 OF 15

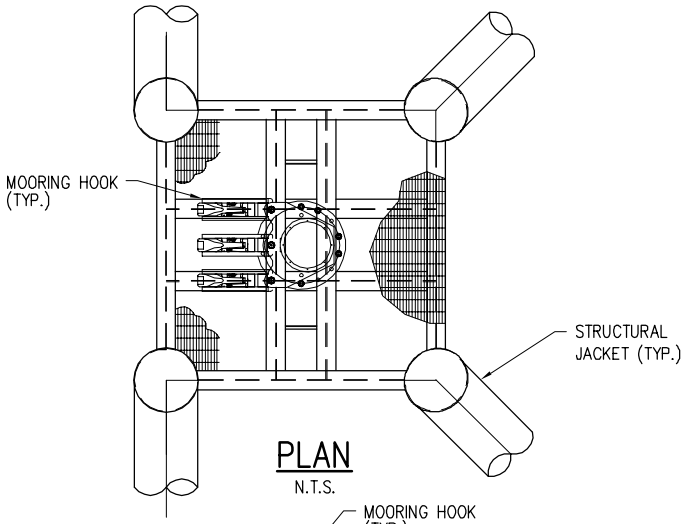

PLAN
N.T.S.

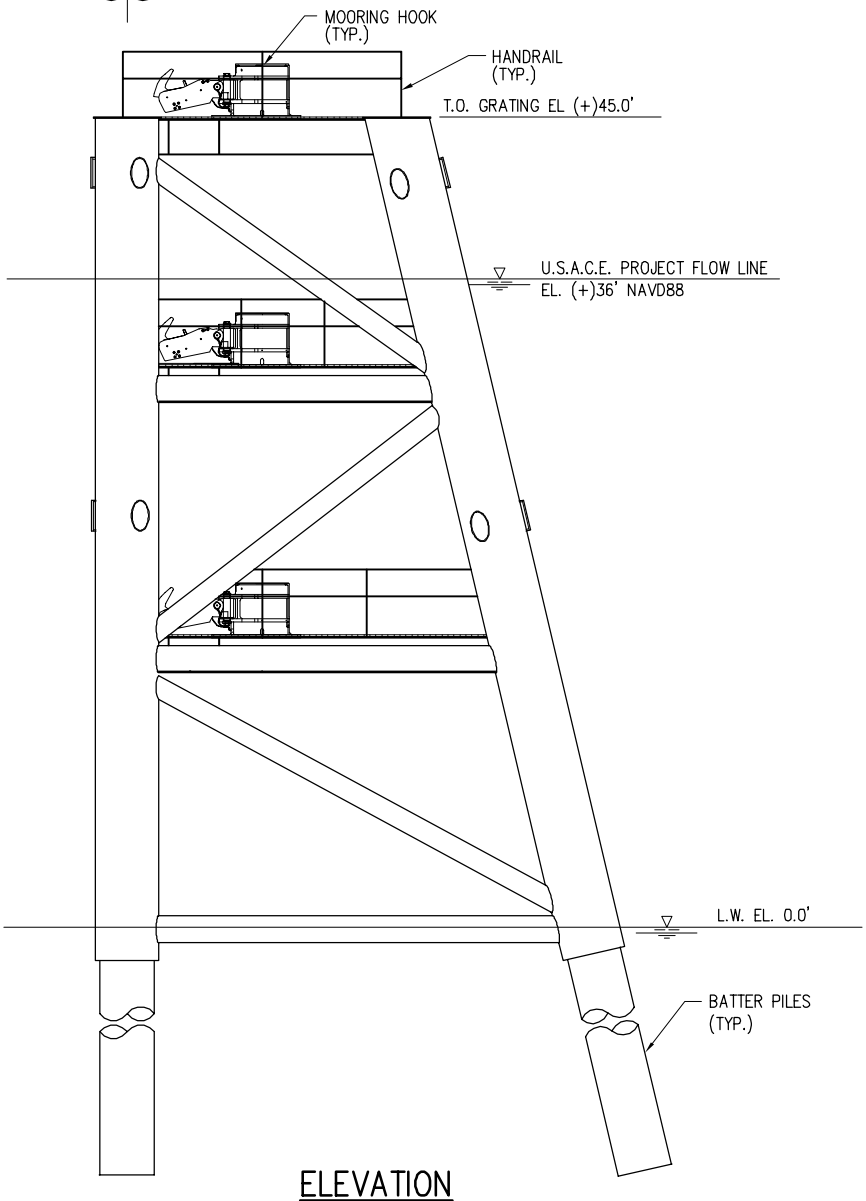

ELEVATION
N.T.S.
(TYP. 2 PLACES)

9025-P7

LANIER & ASSOCIATES
CONSULTING ENGINEERS
INCORPORATED
NEW ORLEANS, LA · BEAUMONT, TX

SHELL US GAS AND POWER, LLC
GEISMAR LOUISIANA

SHELL US GAS AND POWER, LLC
PROPOSED BARGE DOCK
PROPOSED NEW MOORING DOLPHIN

DATE OCT. '12
DESIGN BMG
DRAWN WGL
CHECK JTM
CONTRACT 9025
SHEET No.
7 OF 15

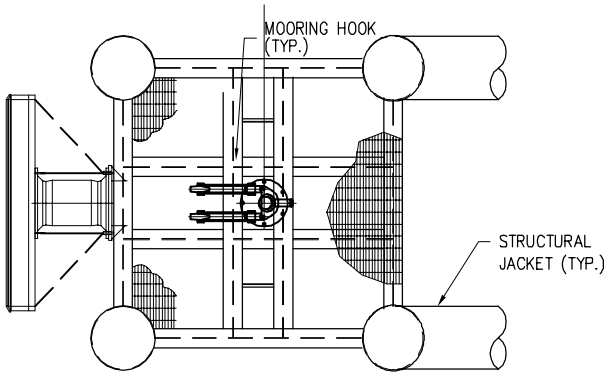

PLAN
N.T.S.

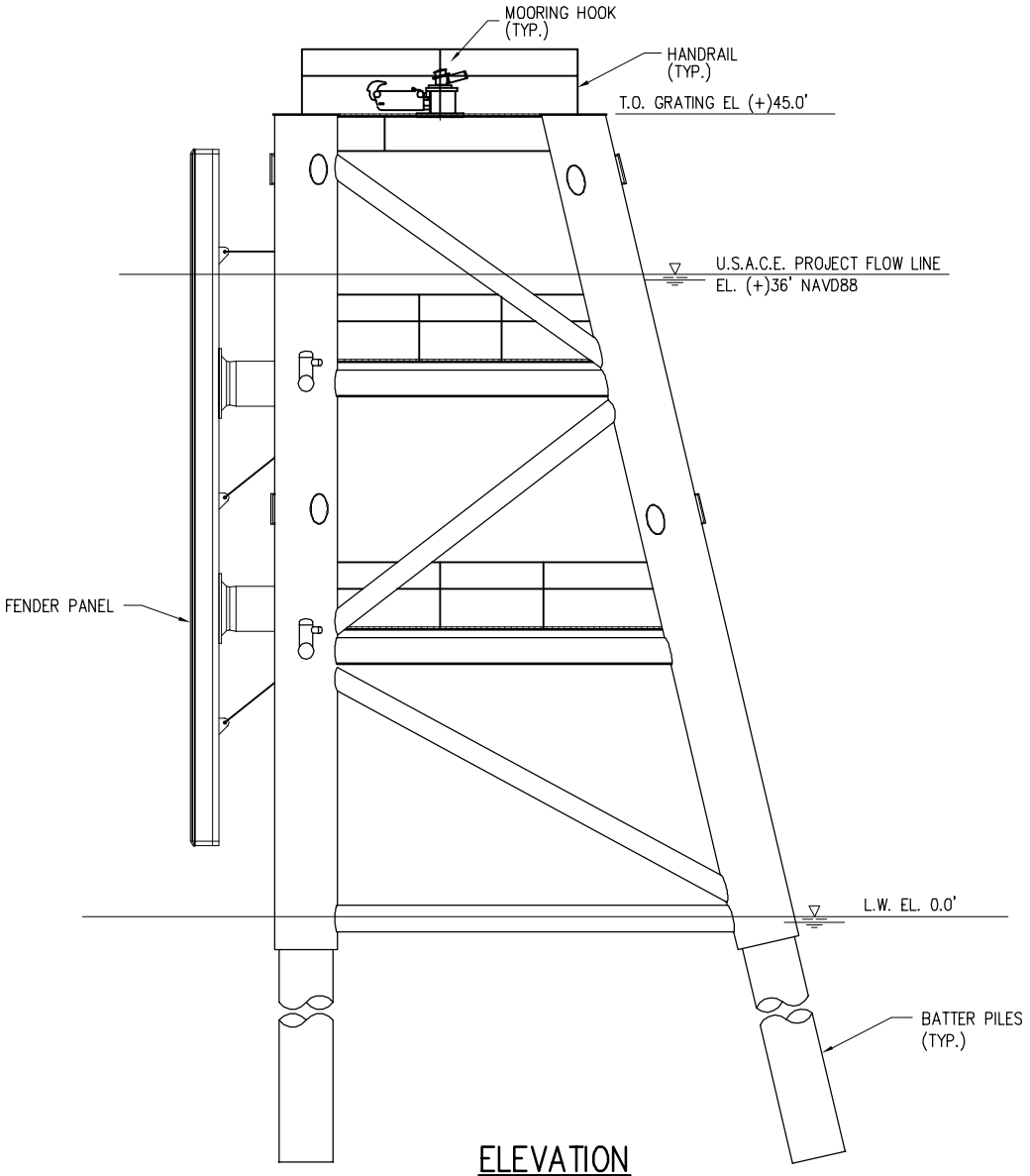

ELEVATION
N.T.S.
(TYP. 2 PLACES)

9025-P8

LANIER & ASSOCIATES
CONSULTING ENGINEERS
INCORPORATED
NEW ORLEANS, LA · BEAUMONT, TX

SHELL US GAS AND POWER, LLC
GEISMAR LOUISIANA

SHELL US GAS AND POWER, LLC
PROPOSED BARGE DOCK
PROPOSED NEW BREASTING DOLPHIN

DATE OCT. '12
DESIGN BMG
DRAWN WGL
CHECK JTM
CONTRACT 9025
SHEET No.
8 OF 15

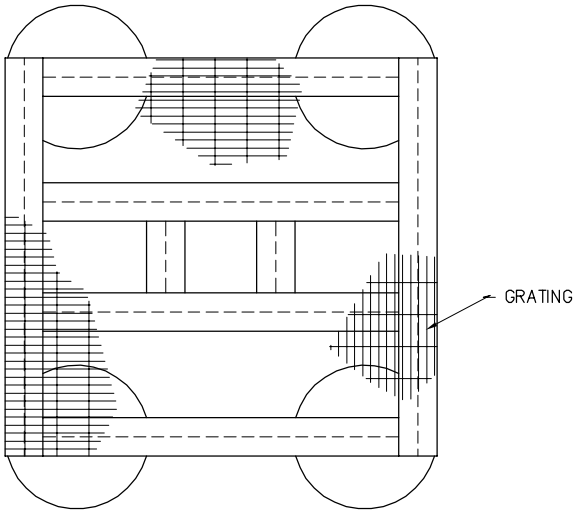

PLAN

N.T.S.

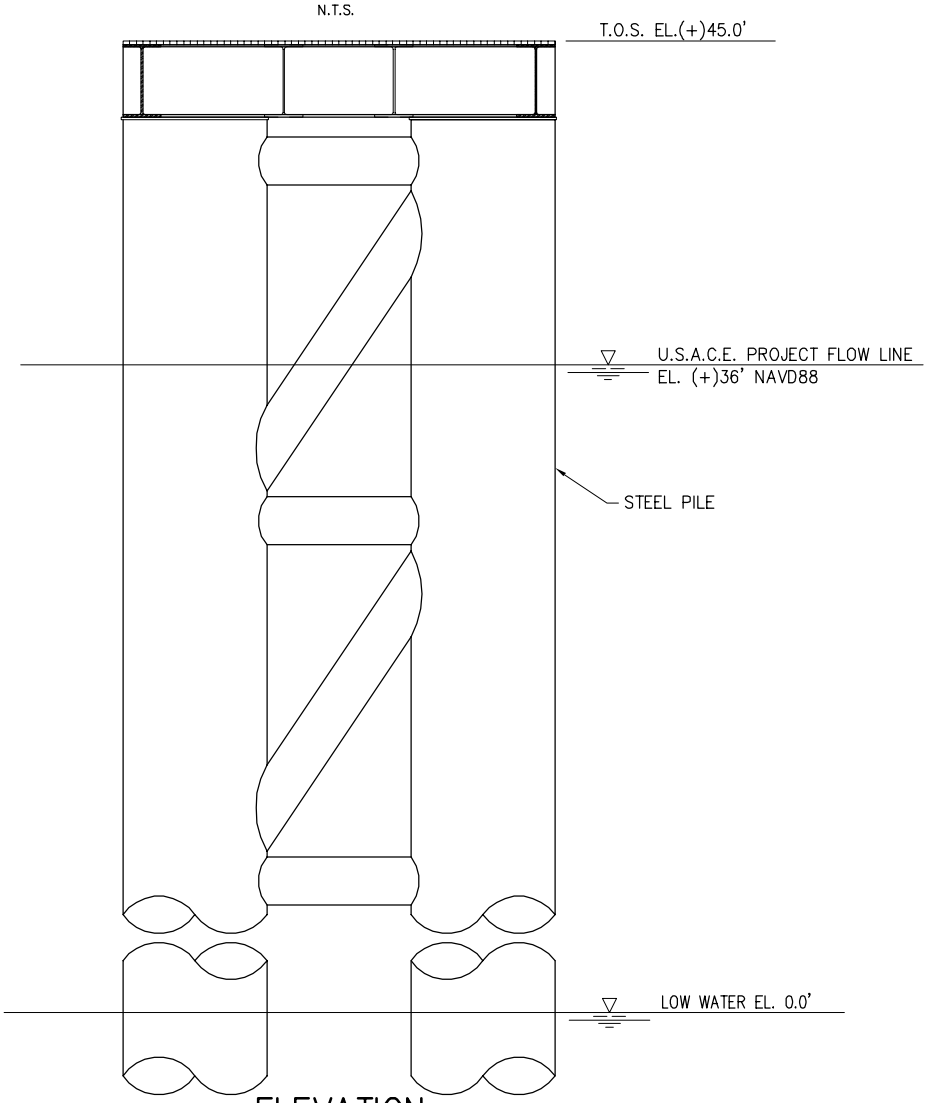

ELEVATION

N.T.S.

9025-P9

LANIER & ASSOCIATES
CONSULTING ENGINEERS
INCORPORATED
NEW ORLEANS, LA · BEAUMONT, TX

SHELL US GAS AND POWER, LLC
GEISMAR LOUISIANA

SHELL US GAS AND POWER, LLC
PROPOSED BARGE DOCK
PROPOSED NEW GANGWAY STRUCTURE

DATE OCT. '12
DESIGN BMG
DRAWN WGL
CHECK JTM
CONTRACT 9025
SHEET No.
9 OF 15

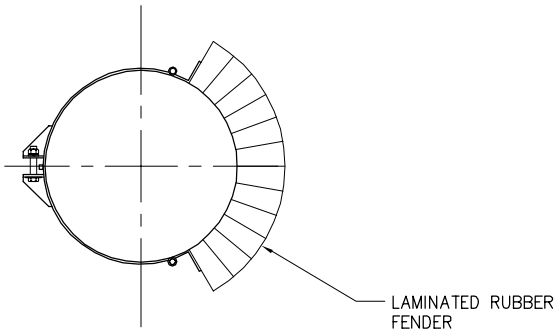

PLAN
N.T.S.

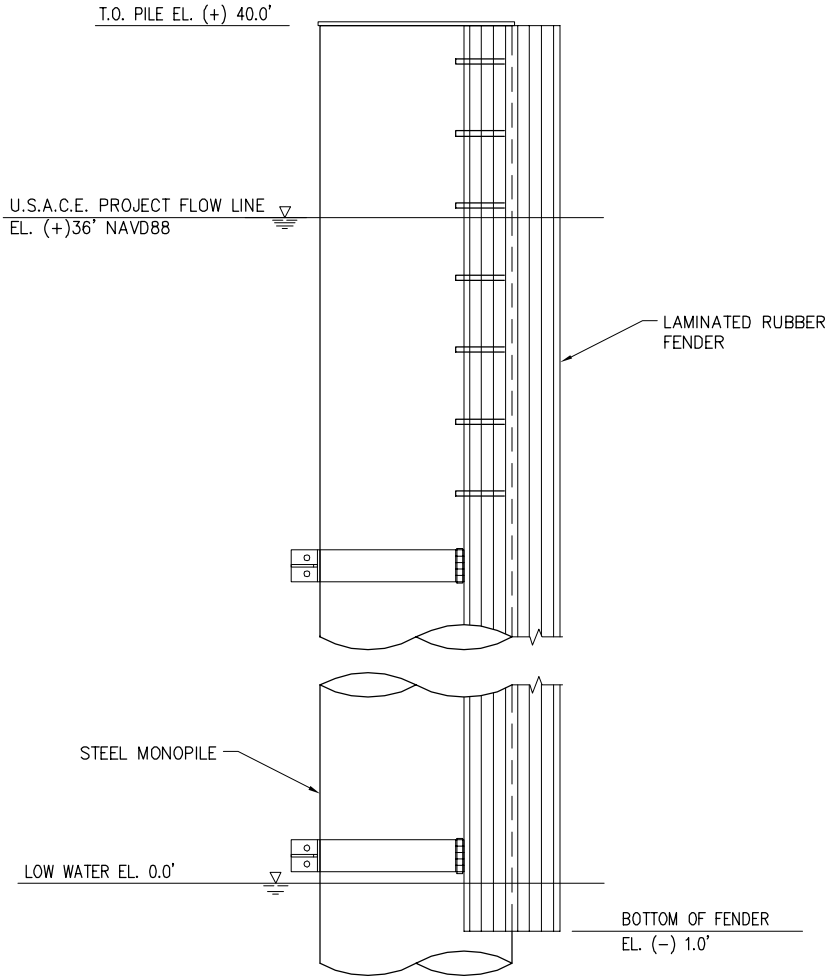

ELEVATION
N.T.S.
(TYP. 6 PLACES)

9025–P10

LANIER & ASSOCIATES
CONSULTING ENGINEERS
INCORPORATED
NEW ORLEANS, LA · BEAUMONT, TX

SHELL US GAS AND POWER, LLC
GEISMAR LOUISIANA

SHELL US GAS AND POWER, LLC
PROPOSED BARGE DOCK
PROPOSED NEW PROTECTION DOLPHIN

DATE OCT. '12
DESIGN BMG
DRAWN WGL
CHECK JTM
CONTRACT 9025
SHEET No.
10 OF 15

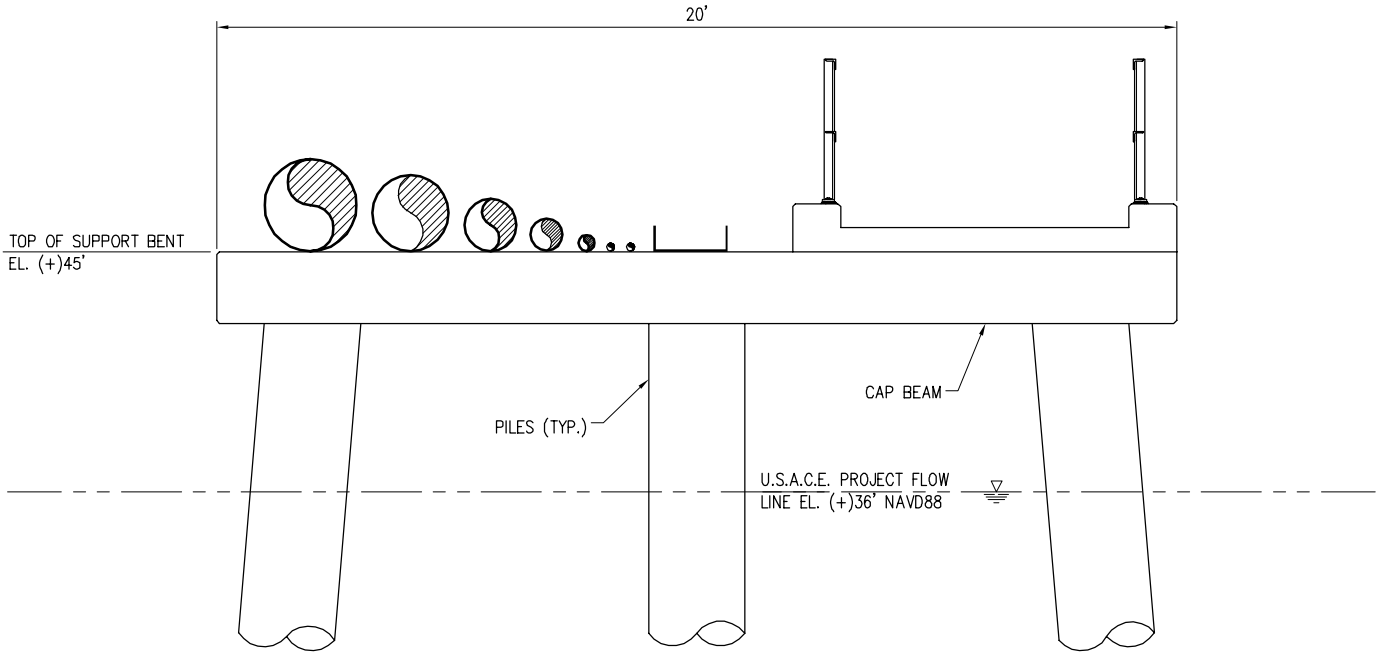

TYPICAL APPROACHWAY SECTION

N.T.S.

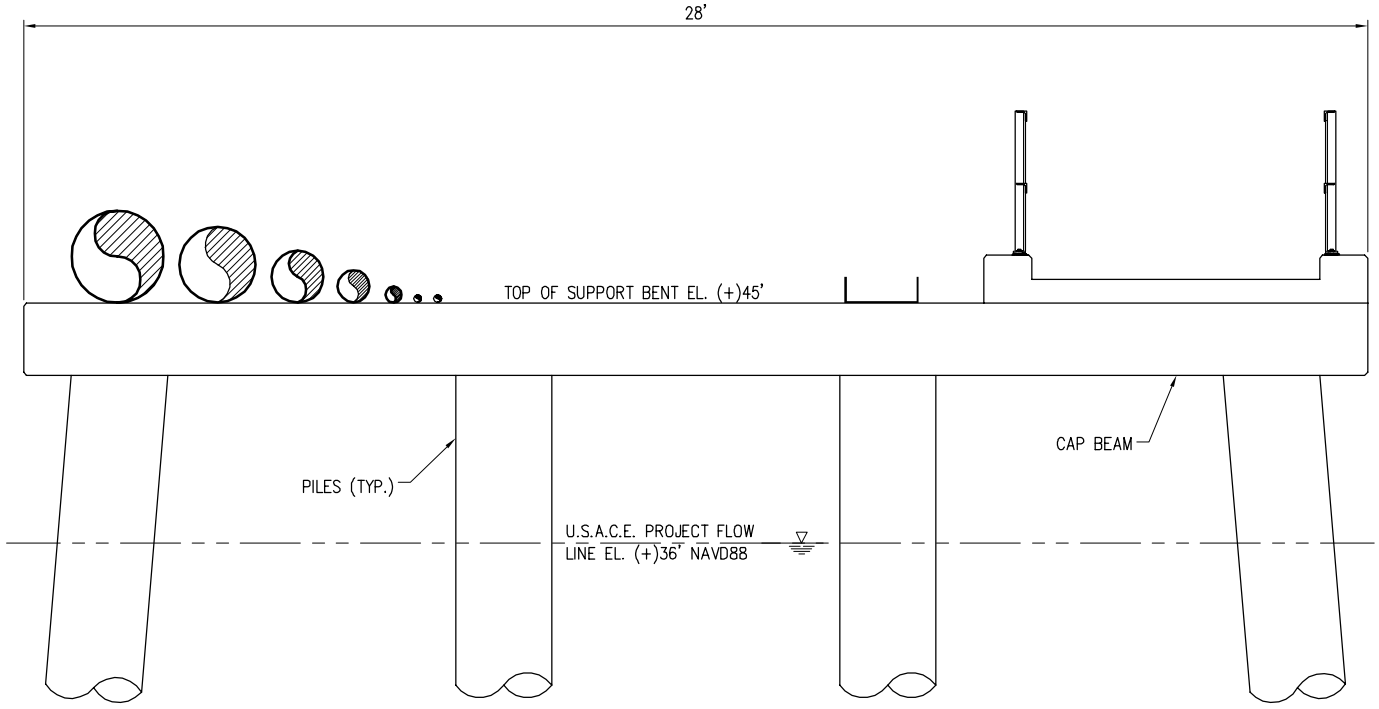

APPROACHWAY SECTION @ EXPANSION LOOPS

N.T.S.

9025-P11

LANIER & ASSOCIATES
CONSULTING ENGINEERS
INCORPORATED
NEW ORLEANS, LA · BEAUMONT, TX

SHELL US GAS AND POWER, LLC
GEISMAR LOUISIANA

SHELL US GAS AND POWER, LLC
PROPOSED BARGE DOCK
TYPICAL APPROACHWAY SECTIONS

DATE SEPT., '12
DESIGN BMG
DRAWN WGL
CHECK JTM
CONTRACT 9025
SHEET No.
11 OF 15

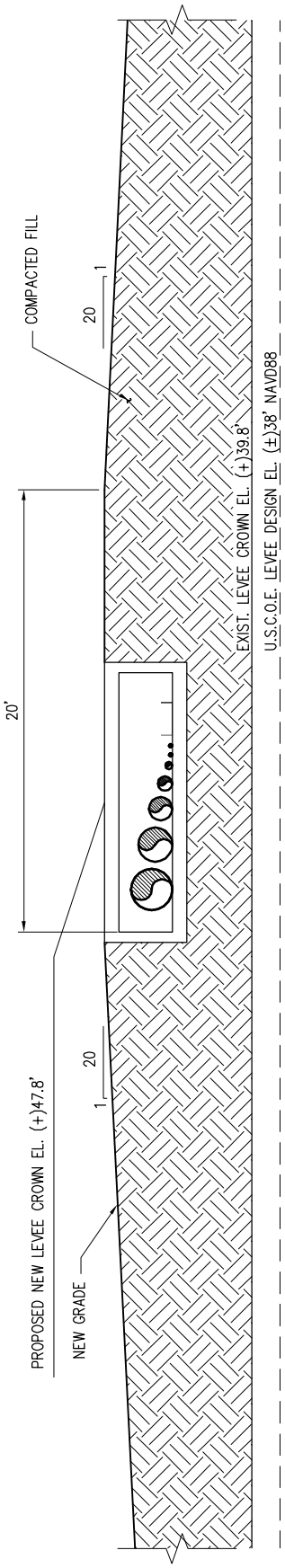

BOX CULVERT SECTION @ LEVEE

N.T.S.

9025-P12

LANIER & ASSOCIATES
CONSULTING ENGINEERS
INCORPORATED
NEW ORLEANS, LA · BEAUMONT, TX

SHELL US GAS AND POWER, LLC
GEISMAR LOUISIANA

SHELL US GAS AND POWER, LLC
PROPOSED BARGE DOCK
CULVERT SECTION @ LEVEE

DATE OCT. '12
DESIGN BMG
DRAWN WGL
CHECK JTM
CONTRACT 9025
SHEET No.
12 OF 15

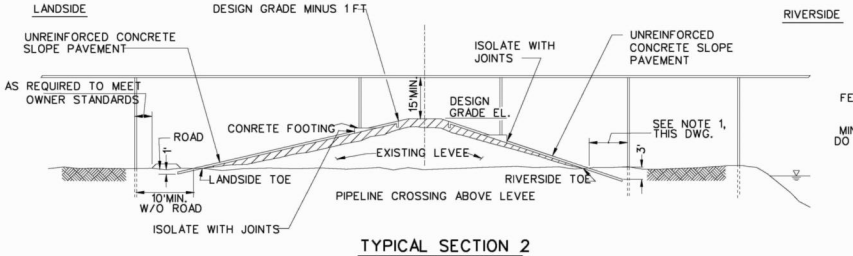

TYPICAL SECTION 2
NOT TO SCALE

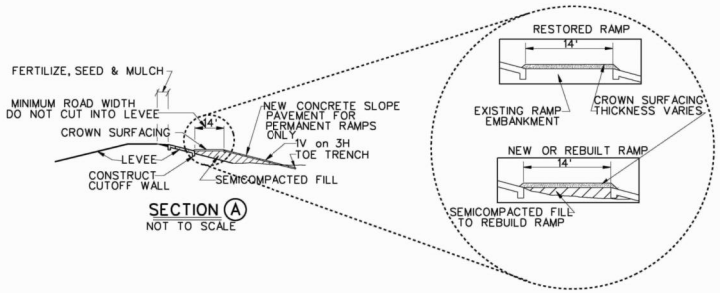

SECTION (A)
NOT TO SCALE

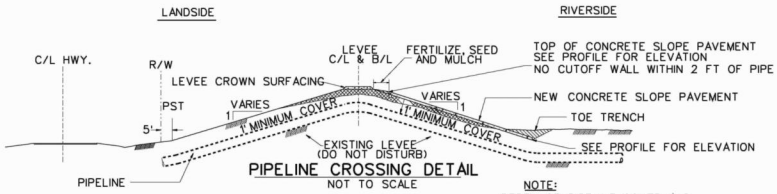

PIPELINE CROSSING DETAIL
NOT TO SCALE

NOTE:
DEPTH OF PIPELINE COVER AND PIPELINE LOCATION SHOULD BE VERIFIED BY PROBING BEFORE WORKING IN AREA OF PIPELINE.

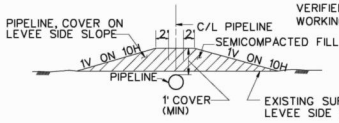

SECTION 1
NOT TO SCALE

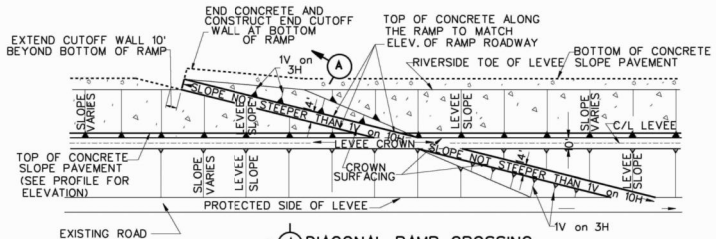

(A) DIAGONAL RAMP CROSSING
NOT TO SCALE

SECTION (B)
NOT TO SCALE

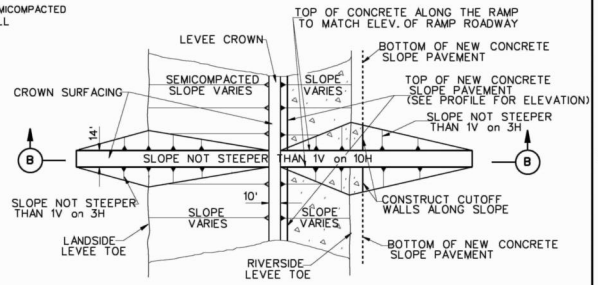

PERPENDICULAR RAMP CROSSING
NOT TO SCALE

EMBANKMENT REQUIREMENTS

COMPACTED FILL: (LEVEE ACCESS ROADS AND FOOTINGS)
THE MATERIALS FOR COMPACTED FILL SHALL BE PLACED OR SPREAD IN LAYERS, THE FIRST OR BOTTOM LAYER AND THE LAST TWO LAYERS NOT MORE THAN 6 INCHES IN THICKNESS AND ALL LAYERS BETWEEN THE FIRST AND THE LAST TWO LAYERS NOT MORE THAN 12 INCHES IN THICKNESS PRIOR TO COMPACTION. THE FIRST AND EACH SUCCESSIVE LAYER OF COMPACTED FILL MATERIAL SHALL BE COMPACTED TO AT LEAST 90 PERCENT OF MAXIMUM DRY DENSITY AS DETERMINED BY ASTM D 698 (STANDARD PROCTOR DENSITY) AT A MOISTURE CONTENT WITHIN THE LIMITS OF PLUS 5 TO MINUS 3 PERCENT OF OPTIMUM MOISTURE CONTENT DETERMINED FROM THE STANDARD PROCTOR DENSITY TEST ASTM D 698.

UNCOMPACTED FILL: (BERMS AND BACKFILL)
THE MATERIAL FOR UNCOMPACTED FILL SHALL BE PLACED IN APPROXIMATELY HORIZONTAL LAYERS NOT EXCEEDING 3 FEET IN THICKNESS. THE LAYERS SHALL BE UNIFORMLY SPREAD, DISTRIBUTED, AND OTHERWISE MANIPULATED DURING PLACEMENT TO SUCH AN EXTENT THAT INDIVIDUAL LOADS OF MATERIAL DEPOSITED ON THE FILL WILL NOT REMAIN INTACT, AND LARGE, OPEN VOIDS IN THE FILL WILL BE ELIMINATED.

NOTES:

1. A 10' MIN. DISTANCE (OR AS OTHERWISE REQUIRED) BETWEEN THE LEVEE TOE AND THE PIPELINE SUPPORT IS REQUIRED TO AVOID PENETRATION OF CONCRETE SLOPE PAVEMENT.
2. CONCRETE SLOPE PAVEMENT IS REQUIRED WHEN SPREAD FOOTINGS REST ON LEVEE SLOPE. PAVEMENT MUST EXTEND 5' EACH SIDE OF FOOTINGS.
3. IN ABSENCE OF FOOTING ON LEVEE, LANDSIDE SLOPE PAVING WILL NOT BE REQUIRED. RIVERSIDE SLOPE PAVING WILL BE REQUIRED WHEN NECESSARY FOR EROSION CONTROL.
4. SMOOTH TRANSITIONS SHALL BE CONSTRUCTED BETWEEN THE LEVEE ENLARGEMENT AND THE EXISTING LEVEE.
5. ALL FRESH FILLS SHALL BE SODDED OR FERTILIZED AND SEEDED AND SHALL BE MAINTAINED UNTIL A HEALTHY GROWTH IS OBTAINED.
6. THE CROWN OF THE ENLARGED LEVEE AND THE LEVEE ACCESS RAMPS SHALL BE SURFACED WITH CRUSHED STONE (7" IN THICKNESS (LOOSE MEASUREMENT) FOR EXISTING CROWN AND RAMPS AND 9" FOR NEW CONSTRUCTION) FOR THE FULL WIDTH (10' MIN.) AND LENGTH OF THE ENLARGED LEVEE OR RAMP. THE CRUSHED STONE SURFACING SHALL MEET THE REQUIREMENTS OF LSSRB SECTION 1003.04 (a), 2000 EDITION.
7. FILL MATERIAL USED IN CONSTRUCTION OF THE LEVEE ENLARGEMENT, RAMPS, PIPE COVER AND BACKFILL OF EXCAVATION SHALL BE IMPERVIOUS EARTH FILL.
8. A PIPELINE MARKER SHALL BE PLACED AND MAINTAINED AT EACH LEVEE TOE IN LINE WITH THE PIPELINE CROSSING AND INDICATE OWNER, SIZE, NUMBER OF LINES, PRODUCT AND ADDRESSES FOR CONTACTING OWNER.

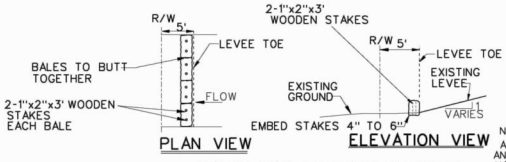

PLAN VIEW
ELEVATION VIEW

BALED HAY EROSION CONTROL
NOT TO SCALE

NOTE:
AFTER REMOVAL OF HAYBALES, FERTILIZE, SEED AND MULCH THE AREA OCCUPIED BY THE HAYBALES AND AREAS DISTURBED AS A RESULT OF REMOVING THE HAYBALES.

LANIER & ASSOCIATES
CONSULTING ENGINEERS, INC.
NEW ORLEANS, LOUISIANA
JOB NO. 9025 CAD NO. 9025-P-13 L & A. DWG. NO. 13 OF 15

US Army Corps of Engineers New Orleans District

MARK	DESCRIPTION	DATE	APPD
2	SKETCH SEMICOMPACTED FILL AND REVISED DESCRIPTION OF COMPACTED FILL.	JAN 06	M.J.A.

U. S. ARMY ENGINEER DISTRICT, NEW ORLEANS
CORPS OF ENGINEERS
NEW ORLEANS, LOUISIANA

DESIGNED BY: CHECKED BY: DRAWN BY: PINTO DATE: NOV 2003
PLAT: PLAT DATE: 20041 NOV 2003
DESIGN FILE NAME: 29027P06.dgn
SUBMITTED BY: BRIAN P. BAUMY, P.E. DESIGN ENGINEER
DESIGN CHECK NO. 29027P06

PIPELINE CROSSINGS OVER LEVEES AND FLOODWALLS
SURFACE CROSSINGS TYPICAL FOR RIVER LEVEES
MISS. RIVER, ATCH. RIVER, AND RED RIVER LEVEES

FILE NUMBER H-8-29027
DWG. 6 OF 9

PILE

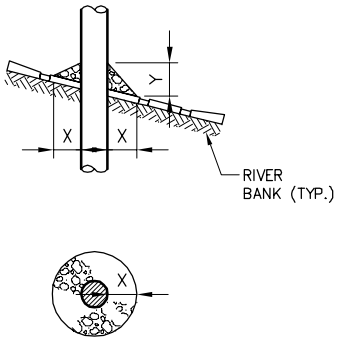

CAISSON

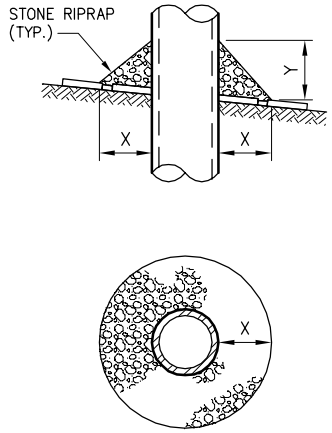

SPUD PILE WITH BUOY AND ANCHOR CHAIN

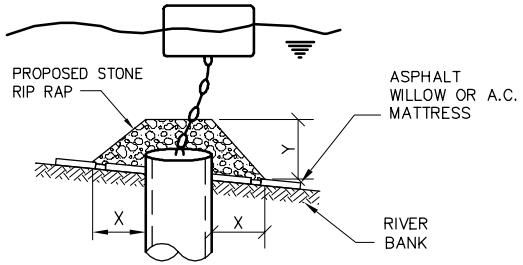

ELEVATION

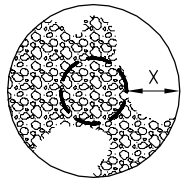

PLAN

PILE CLUSTER

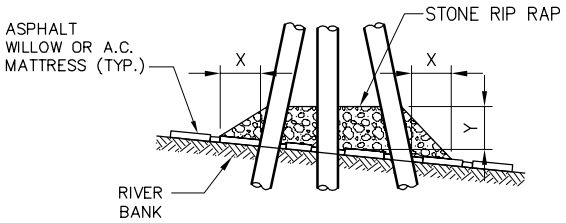

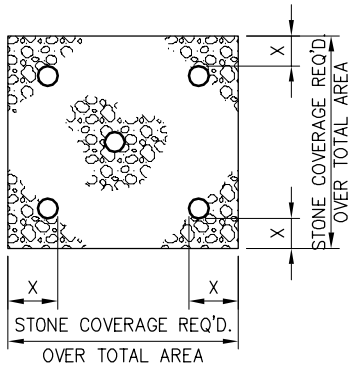

BEPTH OF WATER IN FEET AT POINT OF PENETRATION AT TIME OF STONE PLACEMENT	DIMENSIONS IN FEET FOR PROTECTION AREA REQUIRED							
	PILE		CAISSON		SPUD PILE W/ ANCHOR CHAIN & BUOY		PILE CLUSTER	
	X	Y	X	Y	X	Y	X	Y
1 TO 10	3	1 1/2	5	2			3	1
11 TO 40	5	2	8	3	7	3	6	2
41 TO 60	8	3	12	4	12	4	10	3

NOTES:

1. SIZE OF RIPRAP TO VARY BETWEEN 6 POUNDS AND 125 POUNDS WITH 40% TO 60% OF THE STONE WITHIN THE RANGE OF 25 POUNDS TO 75 POUNDS.
2. WHEN PENETRATING UPPER BANK PAVING IN A REVETMENT AREA WITH PILES, CAISSONS AND/OR PILE CLUSTERS, A 10 INCH THICKNESS OF RIPRAP STONE SHALL BE PLACED OVER ALL AREAS WHERE BANK PAVING IS DISTURBED BY DRIVING OPERATIONS.
3. WHEN USING ANCHOR CHAIN AND BUOY SYSTEM ANCHOR CHAIN MUST BE ATTACHED AT TOP OF PILE TO MINIMIZE REVETMENT DAMAGE.

LANIER & ASSOCIATES
CONSULTING ENGINEERS, INC.
NEW ORLEANS, LOUISIANA
JOB NO. 9025 CAD NO. 9025-P14 L. & A. DWG. NO. 14 OF 15

REPAIR PROCEDURES REQUIRED WHEN PENETRATING REVETMENTS WITH PILES, CAISSONS AND/OR PILE CLUSTERS

U.S ARMY ENGINEERS DISTRICT, NEW ORLEANS
CORPS OF ENGINEERS

DEC. 1987

FILE NO. H-18-28350

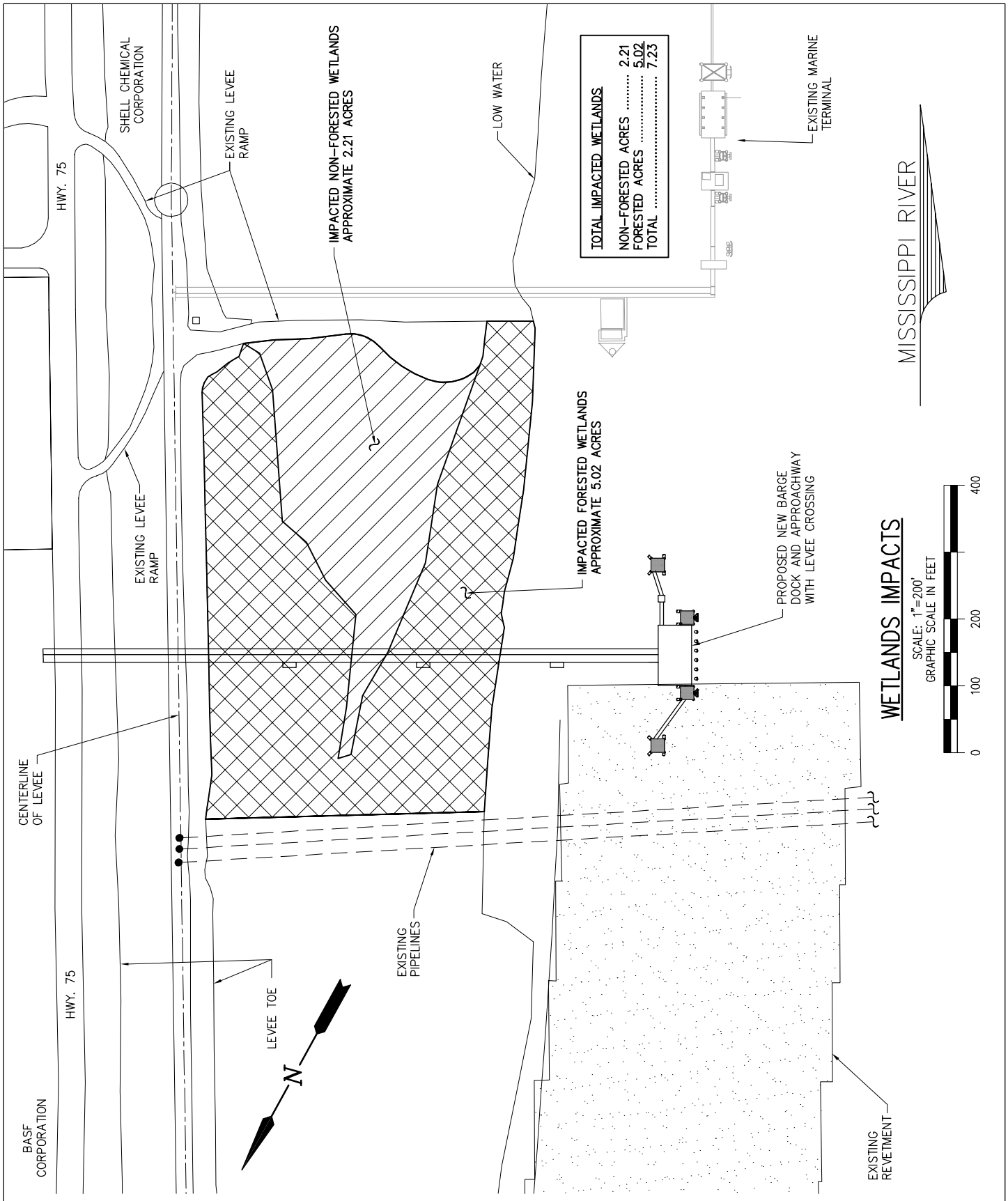

9025-P15

LANIER & ASSOCIATES
CONSULTING ENGINEERS
INCORPORATED
NEW ORLEANS, LA · BEAUMONT, TX

SHELL US GAS AND POWER, LLC
GEISMAR LOUISIANA

SHELL US GAS AND POWER, LLC
PROPOSED BARGE DOCK
BATTURE WETLANDS MAP

DATE OCT. '12
DESIGN BMG
DRAWN WGL
CHECK JTM
CONTRACT 9025
SHEET No.
15 OF 15