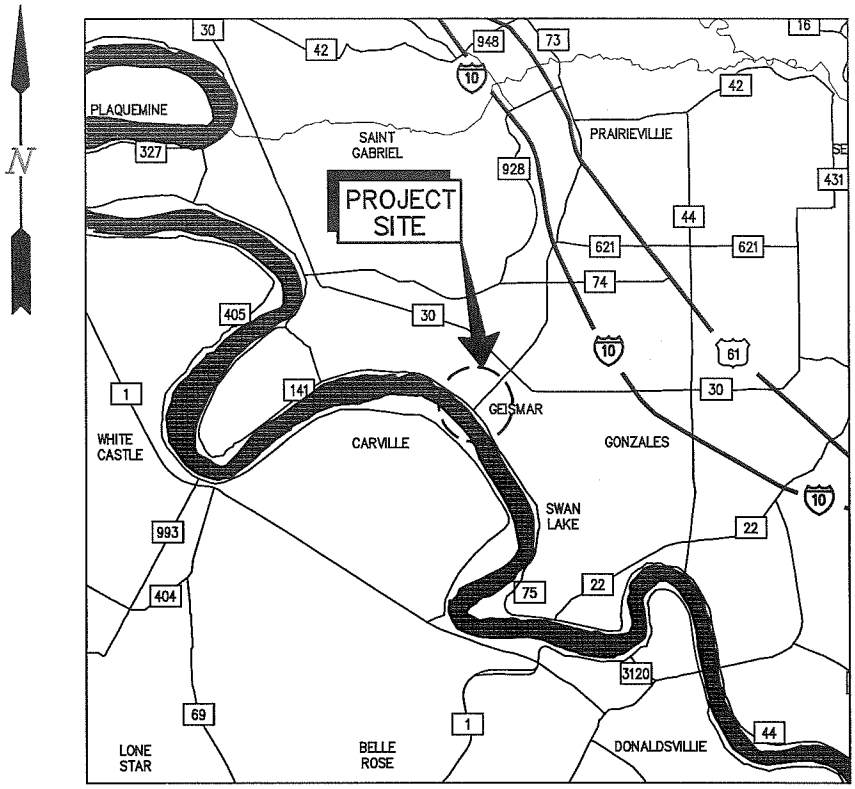

VICINITY MAP

GRAPHIC SCALE IN MILES

0 4 8 12

LAT.: 30°10'37.07"N
LON.: 91°0'25.87"W

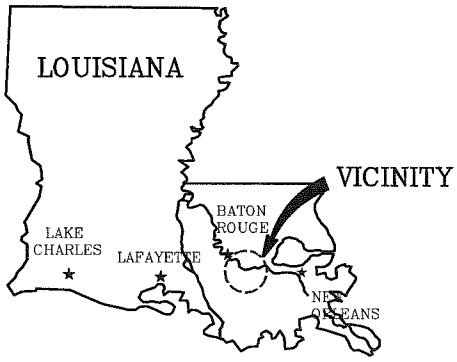

AREA MAP

8928-3-P1

LANIER & ASSOCIATES
CONSULTING ENGINEERS
INCORPORATED
NEW ORLEANS, LA · BEAUMONT, TX

SHELL CHEMICAL LP
GEISMAR LOUISIANA

SHELL CHEMICAL LP
PROPOSED DOLPHINS AND PLATFORM
AREA & VICINITY MAPS

DATE SEPT. '12
DESIGN BMG
DRAWN WGL
CHECK JTM
CONTRACT 8928-3
SHEET No.
1 OF 8

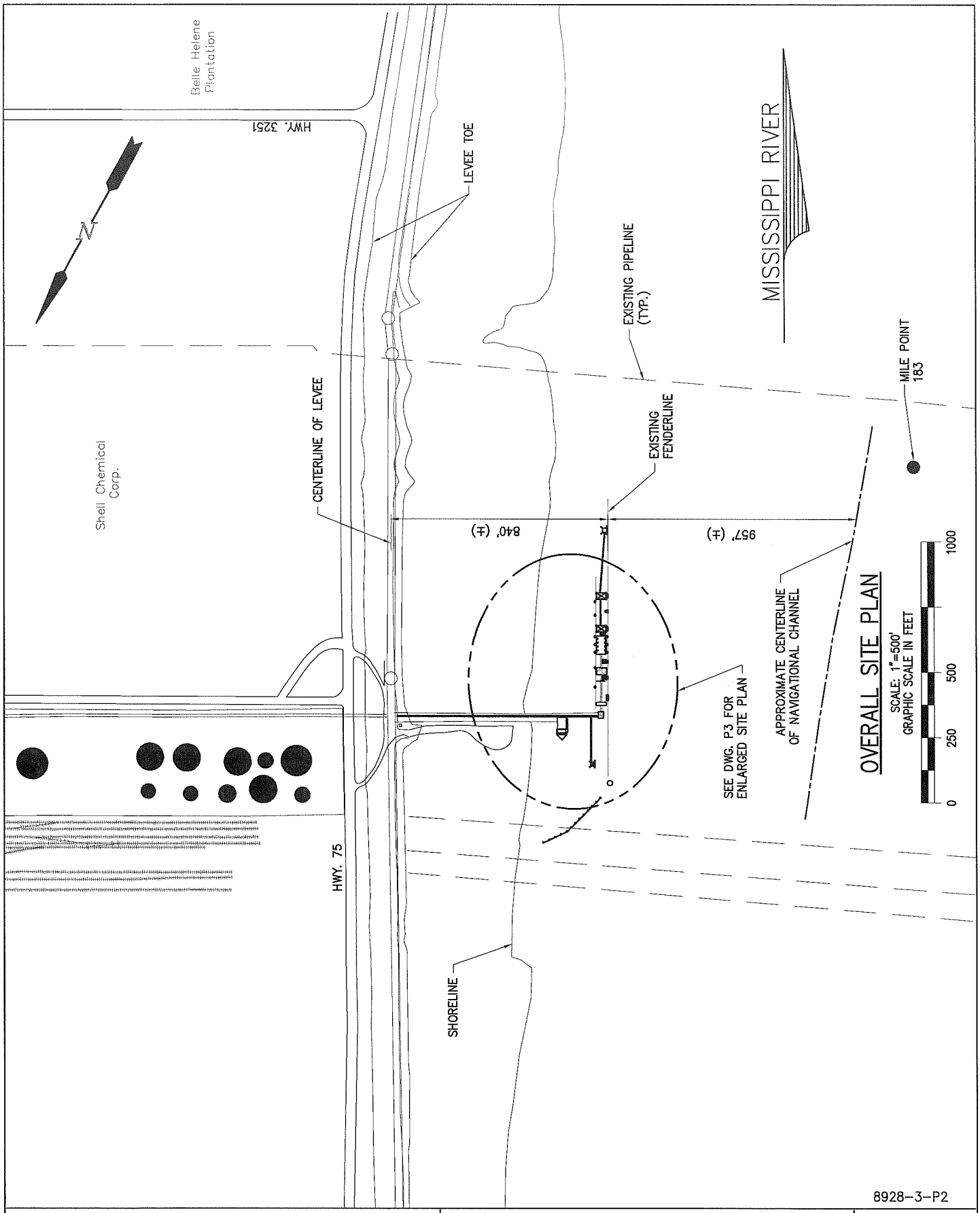

8928-3-P2

LANIER & ASSOCIATES
CONSULTING ENGINEERS
INCORPORATED
NEW ORLEANS, LA · BEAUMONT, TX

SHELL CHEMICAL LP
GEISMAR LOUISIANA

SHELL CHEMICAL LP
PROPOSED DOLPHINS AND PLATFORM
OVERALL SITE PLAN

DATE SEPT. '12
DESIGN BMG
DRAWN WGL
CHECK JTM
CONTRACT 8928-3
SHEET No.
2 OF 8

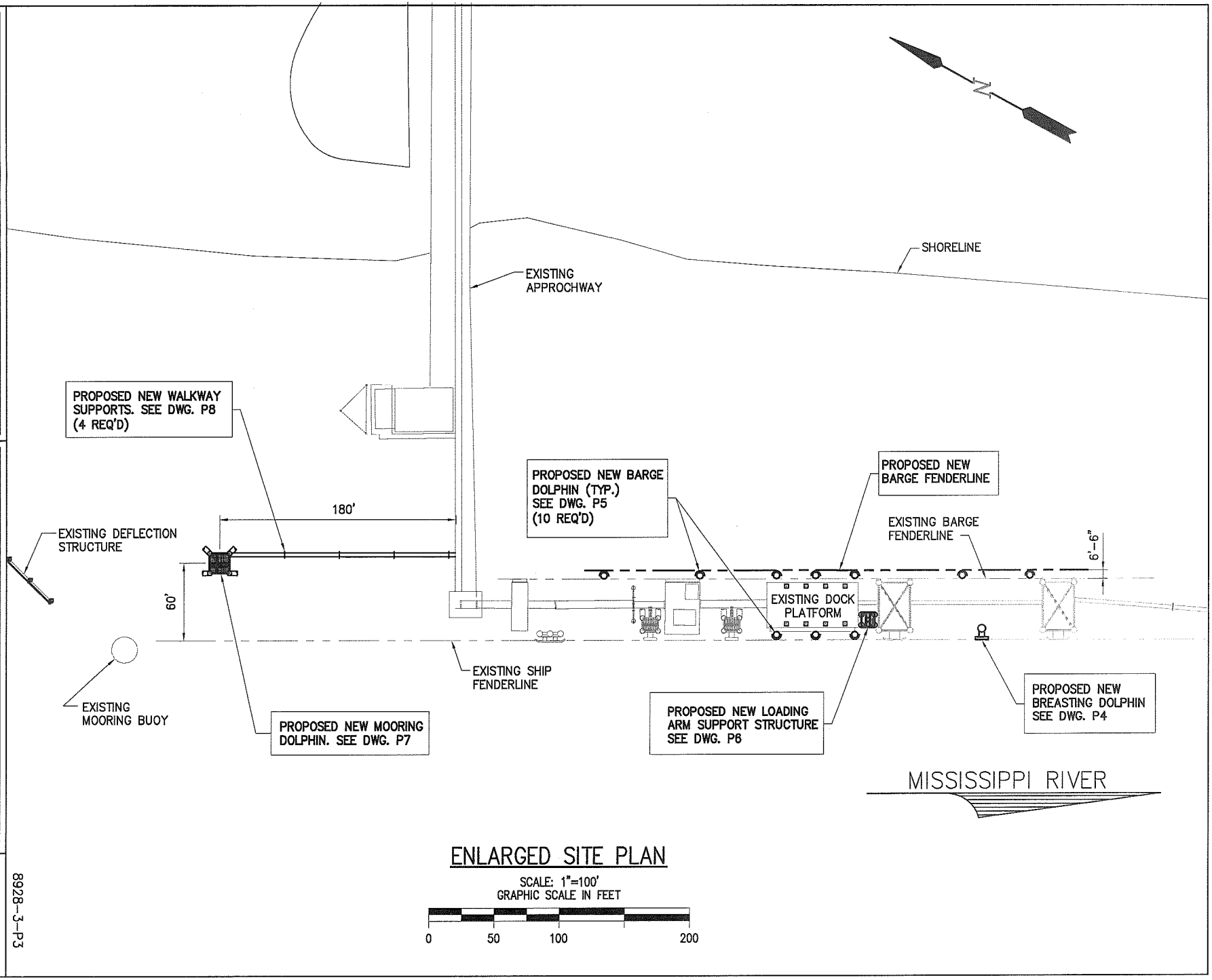

ENLARGED SITE PLAN

SCALE: 1"=100'
GRAPHIC SCALE IN FEET

0 50 100 200

LANIER & ASSOCIATES
CONSULTING ENGINEERS
INCORPORATED
NEW ORLEANS, LA · BEAUMONT, TX

GESMAR

SHELL CHEMICAL LP

LOUISIANA

SHELL CHEMICAL LP
PROPOSED DOLPHINS AND PLATFORM
ENLARGED SITE PLAN

DATE SEPT. '12
DESIGN BMG
DRAWN WGL
CHECK JTM
CONTRACT 8928-3
SHEET No. 3 OF 8

8928-3-P3

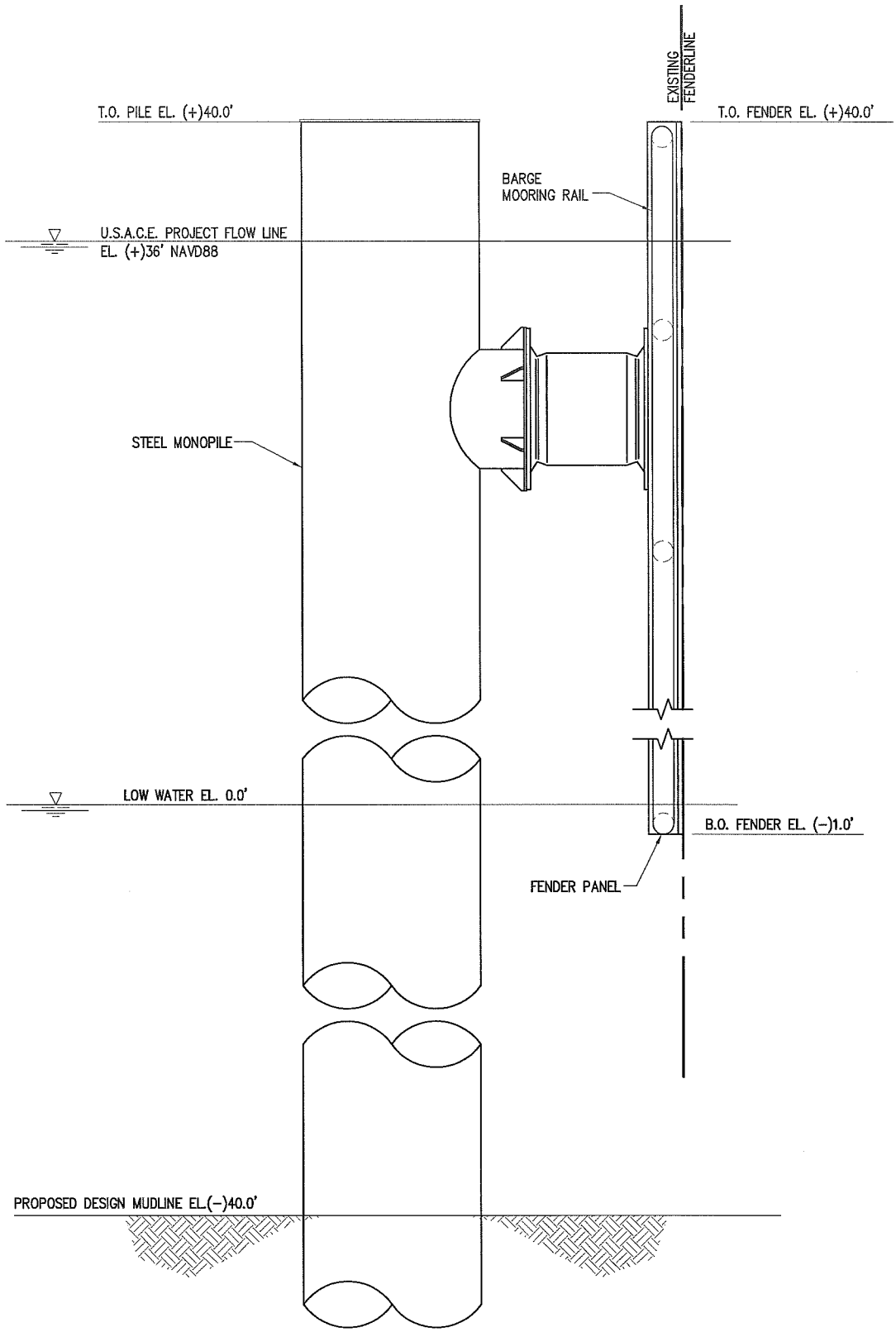

ELEVATION
N.T.S.

8928-3-P4

LANIER & ASSOCIATES
CONSULTING ENGINEERS
INCORPORATED
NEW ORLEANS, LA · BEAUMONT, TX

SHELL CHEMICAL LP
GEISMAR LOUISIANA

SHELL CHEMICAL LP
PROPOSED DOLPHINS AND PLATFORM
PROPOSED NEW BREASTING DOLPHIN

DATE SEPT. '12
DESIGN BMG
DRAWN WGL
CHECK JTM
CONTRACT 8928-3
SHEET No.
4 OF 8

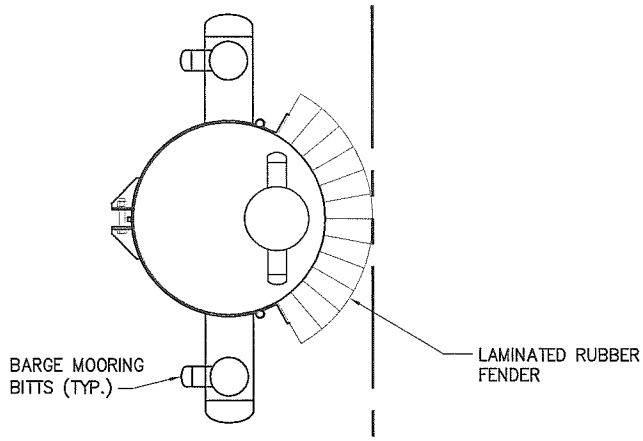

PLAN

N.T.S.

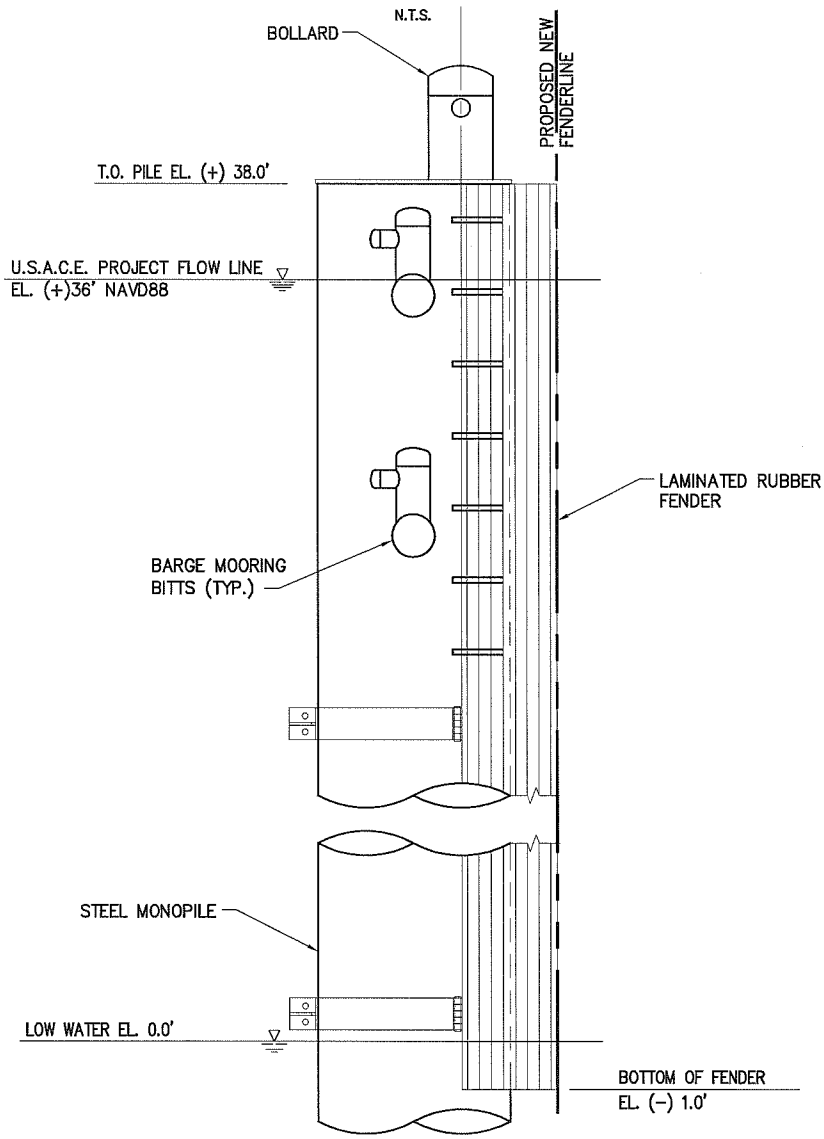

ELEVATION

N.T.S.
(10 REQ'D)

8928-3-P5

LANIER & ASSOCIATES
CONSULTING ENGINEERS
INCORPORATED
NEW ORLEANS, LA · BEAUMONT, TX

SHELL CHEMICAL LP
GEISMAR LOUISIANA

SHELL CHEMICAL LP
PROPOSED DOLPHINS AND PLATFORM
PROPOSED NEW BARGE DOLPHIN

DATE SEPT. '12
DESIGN BMG
DRAWN WGL
CHECK JTM
CONTRACT 8928-3
SHEET No.
5 OF 8

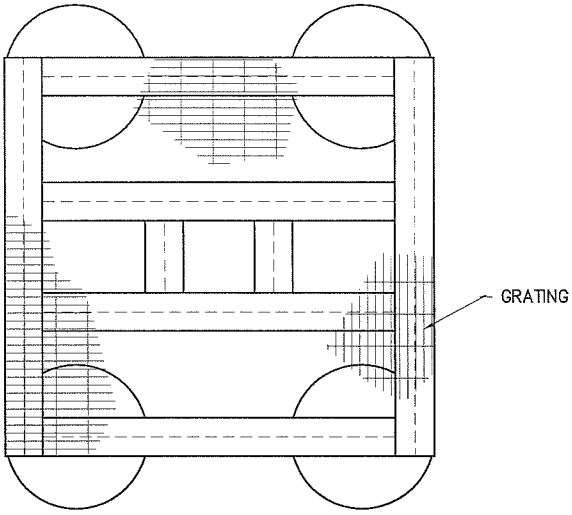

PLAN

N.T.S.

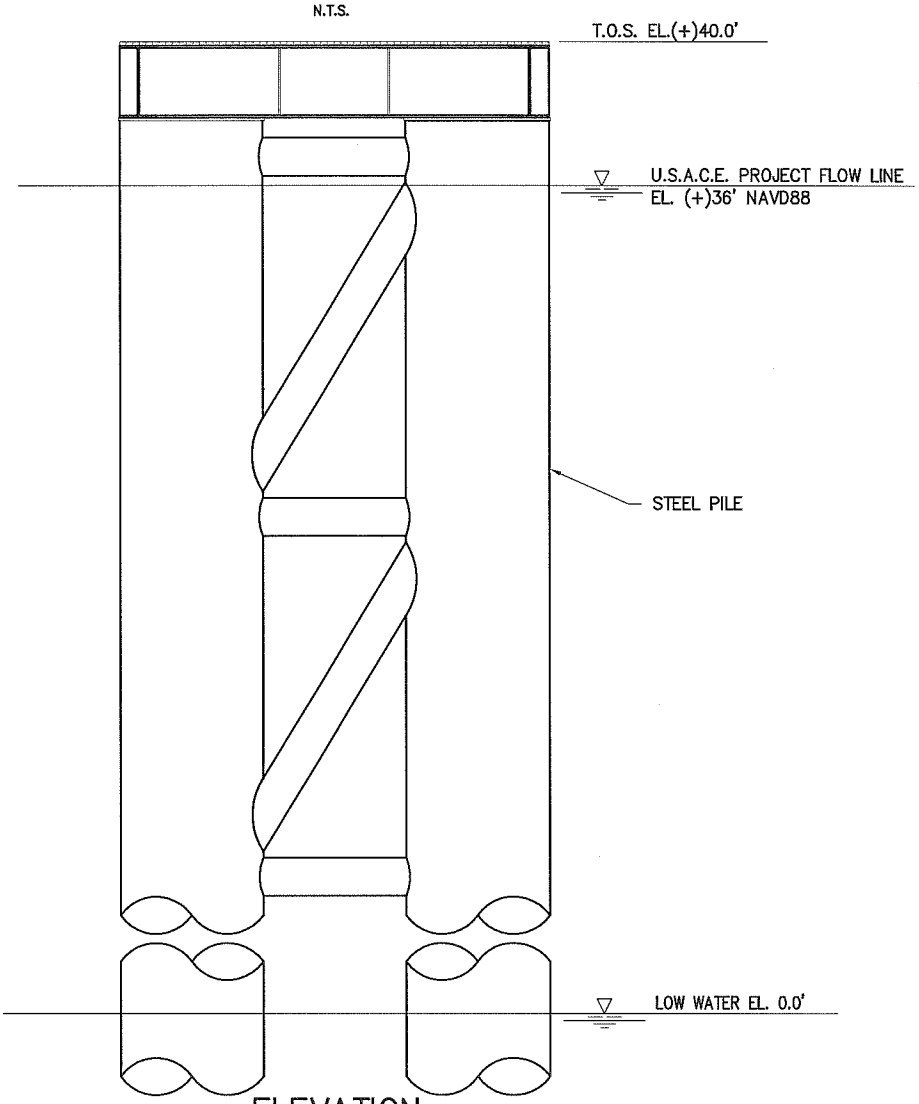

ELEVATION

N.T.S.

8928-3-P6

LANIER & ASSOCIATES
CONSULTING ENGINEERS
INCORPORATED
NEW ORLEANS, LA · BEAUMONT, TX

SHELL CHEMICAL LP
GEISMAR LOUISIANA

SHELL CHEMICAL LP
PROPOSED DOLPHINS AND PLATFORM
PROPOSED NEW LOADING ARM SUPPORT STRUCTURE

DATE SEPT. '12
DESIGN BMG
DRAWN WGL
CHECK JTM
CONTRACT 8928-3
SHEET No.
6 OF 8

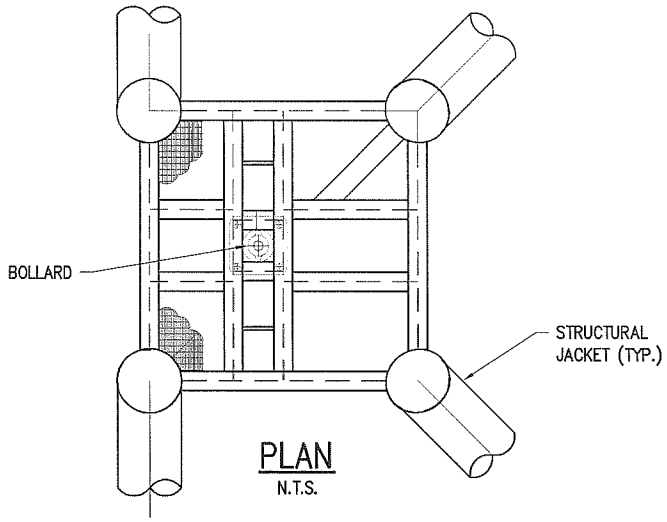

PLAN
N.T.S.

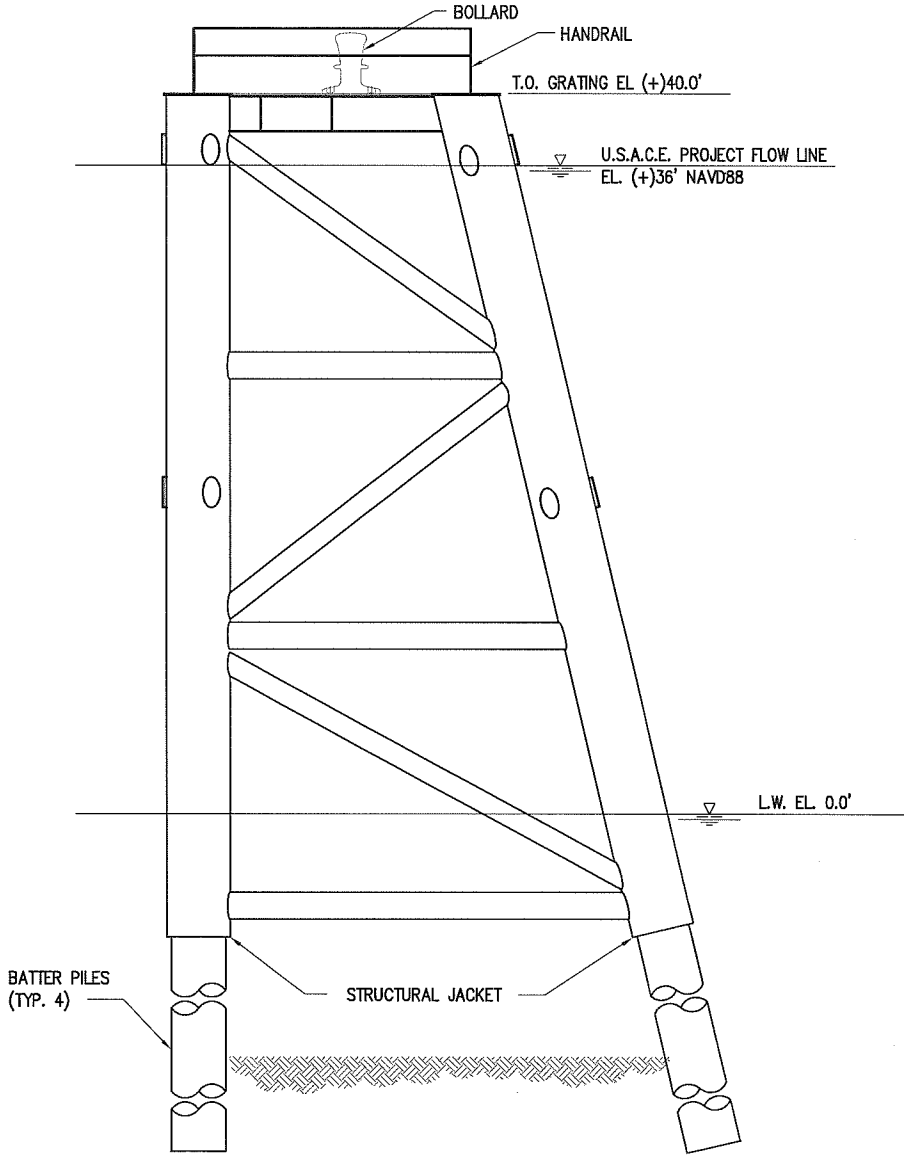

ELEVATION
N.T.S.

8928-3-P7

LANIER & ASSOCIATES
CONSULTING ENGINEERS
INCORPORATED
NEW ORLEANS, LA · BEAUMONT, TX

SHELL CHEMICAL LP
GEISMAR LOUISIANA

SHELL CHEMICAL LP
PROPOSED DOLPHINS AND PLATFORM
PROPOSED NEW MOORING DOLPHIN

DATE SEPT. '12
DESIGN BMG
DRAWN WGL
CHECK JTM
CONTRACT 8928-3
SHEET No.
7 OF 8

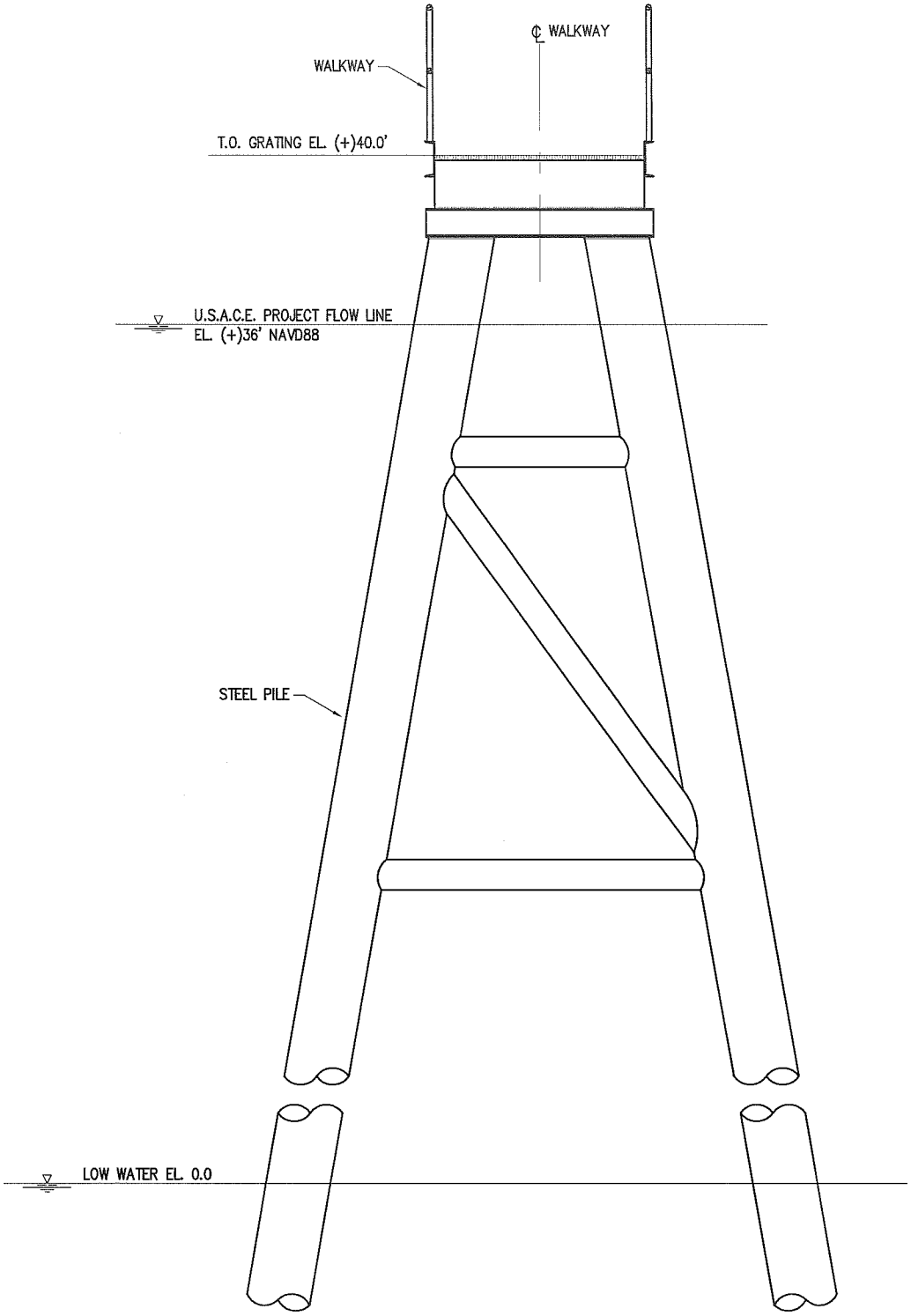

ELEVATION
N.T.S.

8928-3-P8

LANIER & ASSOCIATES
CONSULTING ENGINEERS
INCORPORATED
NEW ORLEANS, LA · BEAUMONT, TX

SHELL CHEMICAL LP
GEISMAR LOUISIANA

SHELL CHEMICAL LP
PROPOSED DOLPHINS AND PLATFORM
PROPOSED NEW WALKWAY SUPPORTS

DATE SEPT. '12
DESIGN BMG
DRAWN WGL
CHECK JTM
CONTRACT 8928-3
SHEET No.
8 OF 8