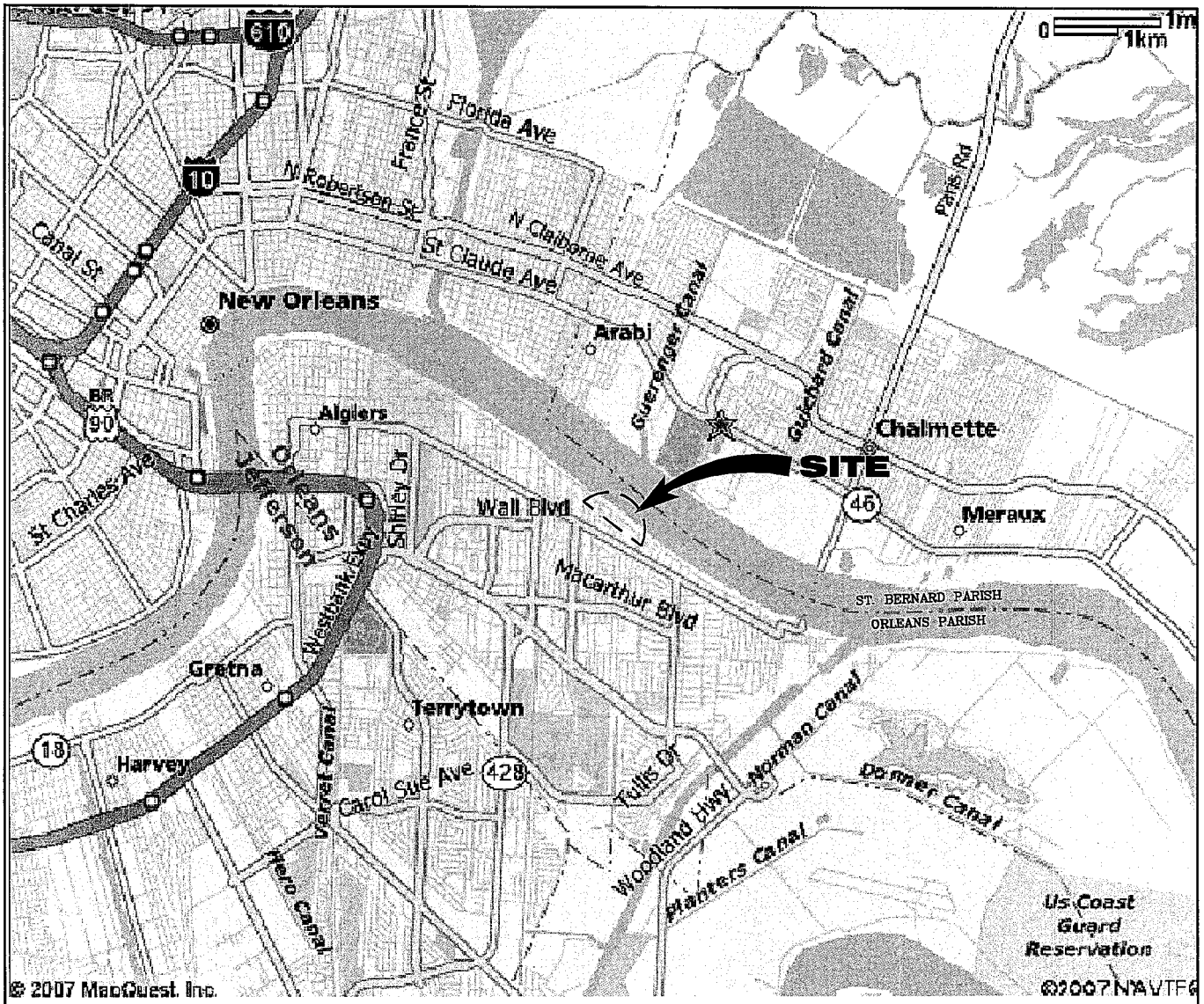

VICINITY MAP

GRAPHIC SCALE IN MILES

0 0.50 1 1.50 2

PARISH: ORLEANS
TOWNSHIP: T13S
RANGE: R24E
LONGITUDE: 90°00'18" W
LATITUDE: 29°56'14" N

AREA MAP

7616-PF1

LANIER & ASSOCIATES
CONSULTING ENGINEERS
INCORPORATED
NEW ORLEANS, LA · HOUSTON, TX

HARBOR TOWING & FLEETING
NEW ORLEANS LOUISIANA

PROPOSED BARGE FLEET EXTENSION
VICINITY MAP

DATE APR.'08
DESIGN JDA
DRAWN MEW
CHECK HJB
CONTRACT 7616
SHEET No.
PF1 OF 5

NOTES:

1. AS-BUILT DRAWINGS WILL BE SUBMITTED WITHIN 30 DAYS OF COMPLETION OF THIS PROJECT TO THE LOUISIANA DEPARTMENT OF NATURAL RESOURCES, OFFICE OF CONSERVATION, PIPELINE DIVISION, P. O. BOX 94275 BATON ROUGE, LA 70804, AND TO THE LOUISIANA DEPARTMENT OF NATURAL RESOURCES, COASTAL MANAGEMENT DIVISION, P. O. BOX 44487, BATON ROUGE, LA 70804-4487.
2. ALL STRUCTURES, FACILITIES, WELL AND PIPELINES/FLOWLINES OCCURRING IN OPEN WATER AREAS OR IN OILFIELD CANALS OR SLIPS SHALL BE REMOVED WITHIN 120 DAYS OF ABANDONMENT FOR THE FACILITIES FOR THE HEREIN PERMITTED USE UNLESS PRIOR WRITTEN APPROVAL TO LEAVE SUCH STRUCTURES IN PLACE IS RECEIVED FROM THE COASTAL MANAGEMENT DIVISION. THIS CONDITION DOES NOT PRECLUDE THE NECESSITY FOR REVISING THE CURRENT PERMIT OR OBTAINING A SEPARATE COASTAL USE PERMIT, SHOULD ONE BE REQUIRED.
3. STRUCTURES MUST ALSO BE MARKED/LIGHTED IN ACCORDANCE WITH U. S. COAST GUARD REGULATIONS.
4. IN ORDER TO ENSURE THE SAFETY OF ALL PARTIES, THE PERMITTEE SHALL CONTACT THE LOUISIANA ONE CALL SYSTEM (1-800-272-3020) A MINIMUM OF 48 HOURS PRIOR TO THE COMMENCEMENT OF ANY EXCAVATION (DIGGING, DREDGING, JETTING, ETC.) OR DEMOLITION ACTIVITY
5. NO IMPACTS TO RARE, THREATENED OR ENDANGERED SPECIES OR CRITICAL HABITATS ARE ANTICIPATED FROM THE PROPOSED PROJECT. NO STATE OR FEDERAL PARKS, WILDLIFE REFUGES, WILDLIFE MANAGEMENT AREAS OR SCENIC RIVERS ARE KNOWN AT THE SPECIFIED SITE OR WITHIN 1/4 MILE OF THE PROPOSED PROJECT.
6. THE LOUISIANA NATURAL HERITAGE PROGRAM (LNHP) HAS COMPILED DATA ON RARE, ENDANGERED, OR OTHERWISE SIGNIFICANT PLANT AND ANIMAL SPECIES, PLANT COMMUNITIES, AND OTHER NATURAL FEATURES THROUGHOUT THE STATE OF LOUISIANA. LNHP REPORTS SUMMARIZE THE EXISTING INFORMATION KNOWN AT THE TIME OF THE REQUEST REGARDING THE LOCATION IN QUESTION. LNHP REPORTS SHOULD NOT BE CONSIDERED FINAL STATEMENTS ON THE BIOLOGICAL ELEMENTS OR AREAS BEING CONSIDERED, NOR SHOULD THEY BE SUBSTITUTED FOR ON-SITE SURVEYS REQUIRED FOR ENVIRONMENTAL ASSESSMENTS. IF AT ANY TIME LNHP TRACKED SPECIES ARE ENCOUNTERED WITHIN THE PROJECT AREA, PLEASE CONTACT OUR BIOLOGIST AT 225-765-2643.

7616-PF2

LANIER & ASSOCIATES
CONSULTING ENGINEERS
INCORPORATED
NEW ORLEANS, LA · HOUSTON, TX

HARBOR TOWING & FLEETING
NEW ORLEANS LOUISIANA

PROPOSED BARGE FLEET EXTENSION
GENERAL NOTES

DATE APR.'08
DESIGN JDA
DRAWN MEW
CHECK HJB
CONTRACT 7616
SHEET No.
PF2 OF 5

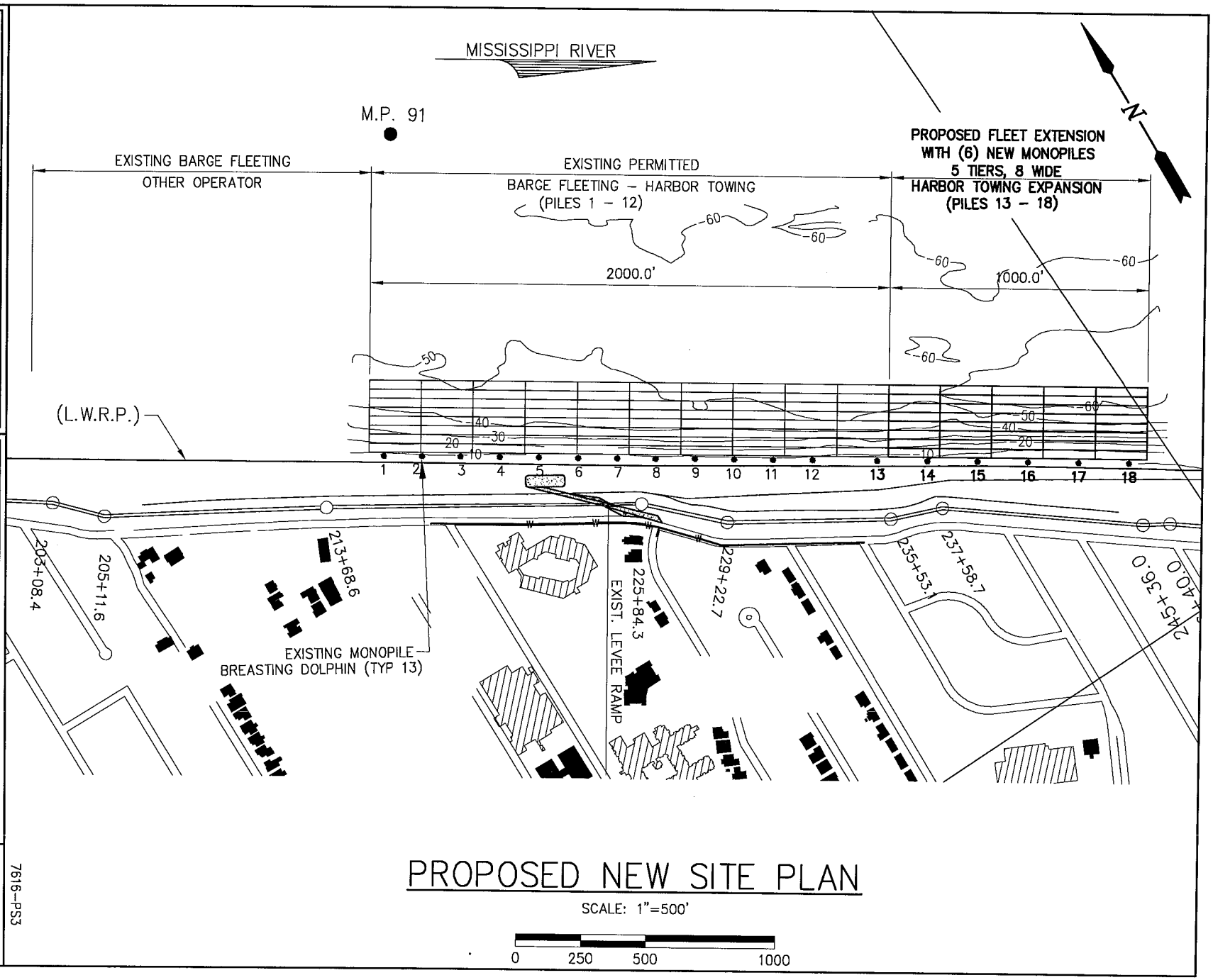

PROPOSED NEW SITE PLAN

SCALE: 1"=500'

0 250 500 1000

LANIER & ASSOCIATES
CONSULTING ENGINEERS
INCORPORATED
NEW ORLEANS, LA · BEAUMONT, TX

HARBOR TOWING & FLEETING
NEW ORLEANS LOUISIANA

PROPOSED BARGE FLEET EXTENSION
OVERALL PLAN

DATE NOV. '10
DESIGN NPL
DRAWN NAH
CHECK JEJ
CONTRACT 7616
SHEET No.
PF3 OF 5

7616-PS3

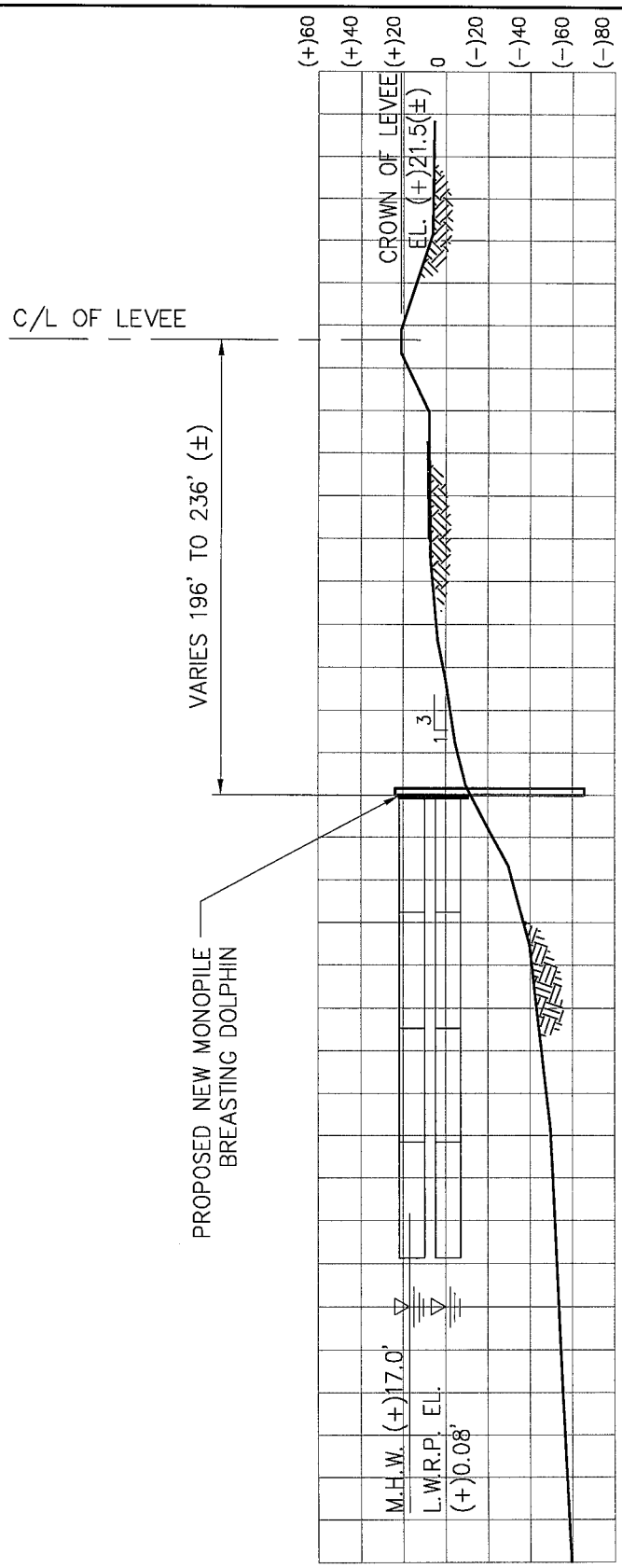

TYPICAL CROSS-SECTION

SCALE: 1"=80'

0 80 160 240 320

7616-PF4

LANIER & ASSOCIATES
CONSULTING ENGINEERS
INCORPORATED
NEW ORLEANS, LA · HOUSTON, TX

HARBOR TOWING & FLEETING
NEW ORLEANS LOUISIANA

PROPOSED BARGE FLEET EXTENSION
TYPICAL
CROSS SECTION

DATE APR. '08
DESIGN JDA
DRAWN MEW
CHECK RRM
CONTRACT 7616
SHEET No.
PF4 OF 5

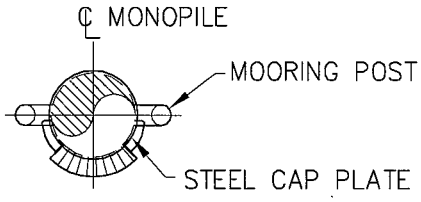

BREASTING PILE PLAN

SCAL: 1/8"=1'-0"

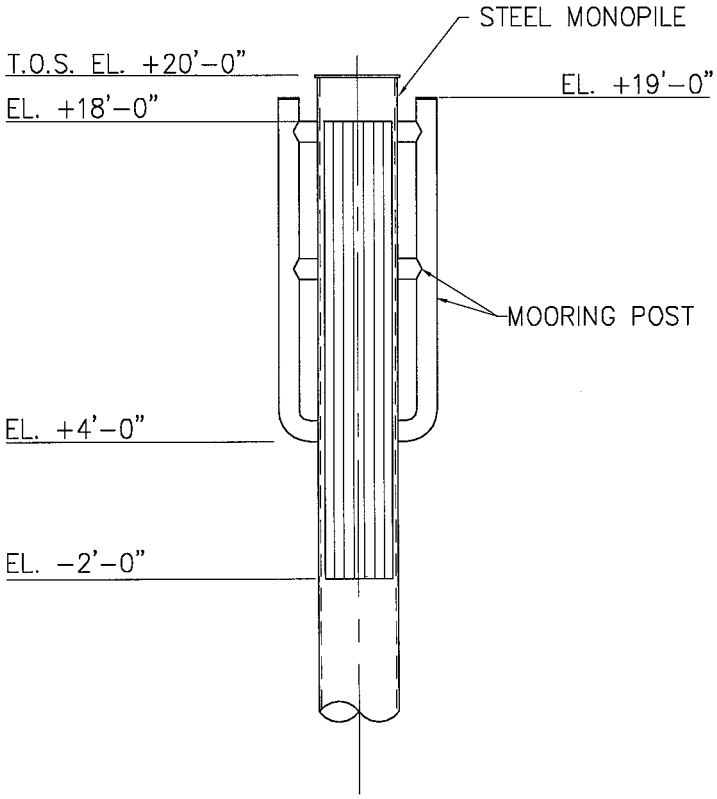

ELEVATION

SCAL: 1/8"=1'-0"

7616-PF5

LANIER & ASSOCIATES
CONSULTING ENGINEERS
INCORPORATED
NEW ORLEANS, LA · HOUSTON, TX

HARBOR TOWING & FLEETING
NEW ORLEANS LOUISIANA

PROPOSED BARGE FLEET EXTENSION
TYPICAL MONOPILE
BREASTING DOLPHIN

DATE APR.'08
DESIGN HJB
DRAWN MEW
CHECK RRM
CONTRACT 7616
SHEET No.
PF5 OF 5