STATE OF LOUISIANA
DEPARTMENT OF NATURAL RESOURCES
COASTAL ENGINEERING DIVISION

DEDICATED DREDGING ON THE BARATARIA BASIN LANDBRIDGE

BA-36

LAFOURCHE & JEFFERSON PARISHES, LOUISIANA

INDEX TO SHEETS

SHEET NO.	DESCRIPTION
1	TITLE SHEET
2	PROJECT LAYOUT
3	BORROW AREA LAYOUT
4	FILL AREA 1 LAYOUT
5	FILL AREA 2 LAYOUT
6	BORROW AREA SECTIONS
7	FILL AREA SECTIONS
8-10	DETAILS
11-12	SHEETPILE DETAILS
13	ACCESS CHANNEL SECTION

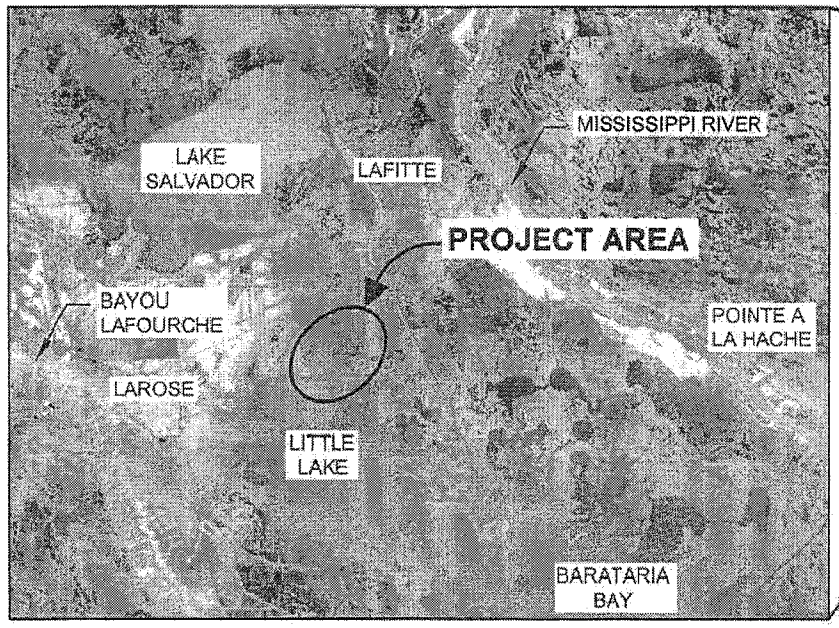

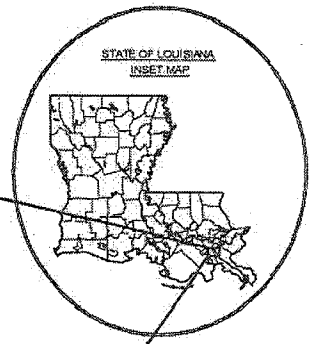

50,000' 25,000' 0' 50,000' 100,000'

APPLICATION BY: U.S. FISH AND WILDLIFE SERVICE 646 CAJUNDOME BLVD., SUITE 400 LAFAYETTE, LA. 70506	LOUISIANA DEPARTMENT OF NATURAL RESOURCES COASTAL ENGINEERING DIVISION 617 NORTH 3RD STREET BATON ROUGE, LOUISIANA 70804	DEDICATED DREDGING ON THE BARATARIA BASIN LANDBRIDGE	TITLE SHEET
		STATE PROJECT NUMBER: BA-36	DATE: JULY 2008
DRAWN BY: KRISTI CANTU	DESIGNED BY: DAIN GILLEN, P.E. / APPROVED BY: LUKE LEBAS, P.E.	FEDERAL PROJECT NUMBER: BA-36	SHEET 1 OF 13

QUANTITIES

LOCATION OF SITE MATERIAL	PREVIOUSLY PERMITTED VOLUME (CU. YDS.)	PREVIOUSLY PERMITTED AREA (ACRES)	ADDITIONAL ACREAGE (JUNE 2009)
BORROW AREA 1	4,141,076	286	N/A
BORROW AREA 2	4,737,346	364	N/A
BORROW AREA 3	5,263,246	337	N/A
BORROW TOTAL	**14,141,668**	**987**	N/A
FILL AREA 1	1,794,667	504	279
FILL AREA 2	2,794,491	742	636
CONTAINMENT DIKES	1,164,157	N/A	
FILL TOTAL	**5,753,315**	**1,246**	915

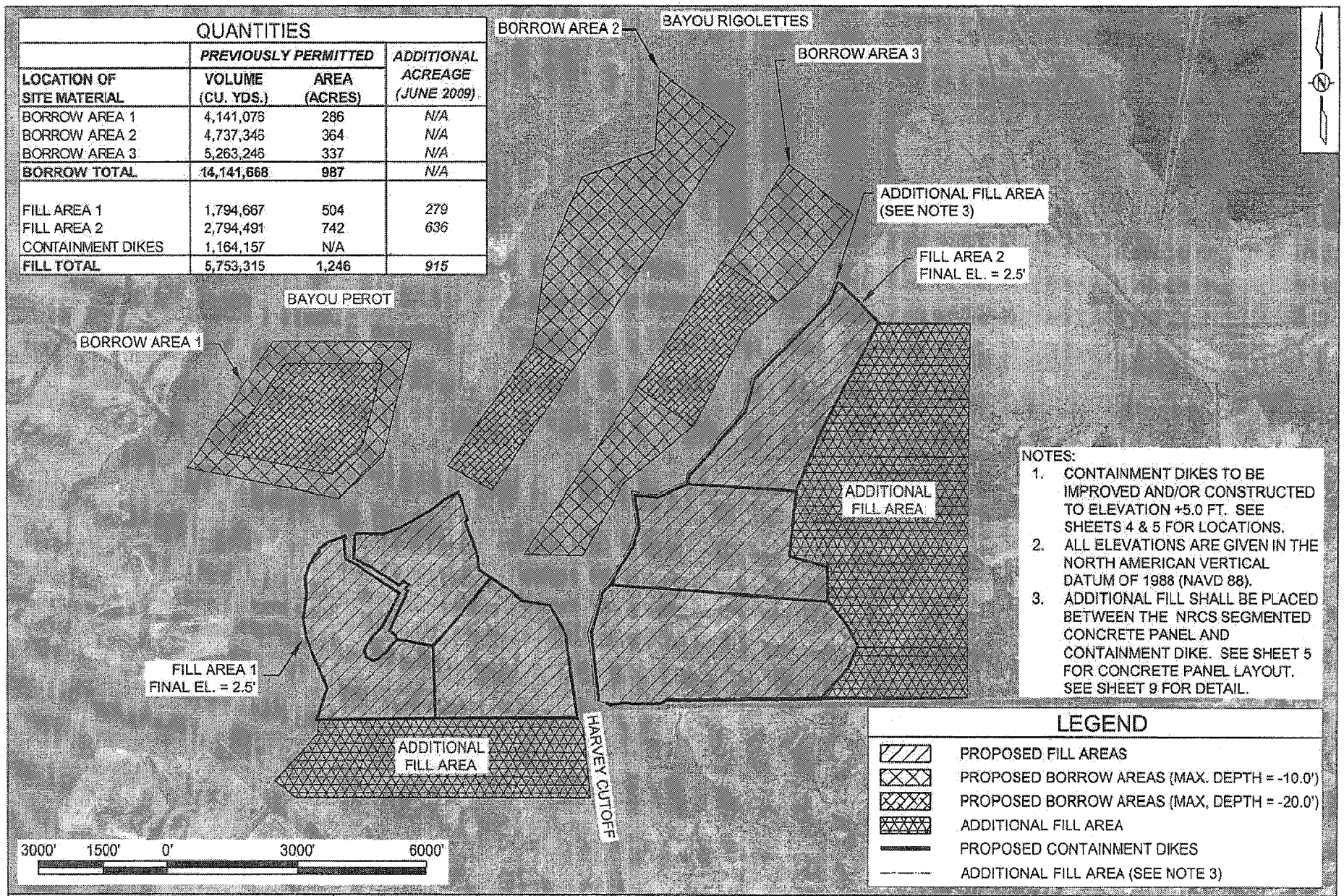

NOTES:
1. CONTAINMENT DIKES TO BE IMPROVED AND/OR CONSTRUCTED TO ELEVATION +5.0 FT. SEE SHEETS 4 & 5 FOR LOCATIONS.
2. ALL ELEVATIONS ARE GIVEN IN THE NORTH AMERICAN VERTICAL DATUM OF 1988 (NAVD 88).
3. ADDITIONAL FILL SHALL BE PLACED BETWEEN THE NRCS SEGMENTED CONCRETE PANEL AND CONTAINMENT DIKE. SEE SHEET 5 FOR CONCRETE PANEL LAYOUT. SEE SHEET 9 FOR DETAIL.

LEGEND

- PROPOSED FILL AREAS
- PROPOSED BORROW AREAS (MAX. DEPTH = -10.0')
- PROPOSED BORROW AREAS (MAX, DEPTH = -20.0')
- ADDITIONAL FILL AREA
- PROPOSED CONTAINMENT DIKES
- ADDITIONAL FILL AREA (SEE NOTE 3)

APPLICATION BY: U.S. FISH AND WILDLIFE SERVICE 646 CAJUNDOME BLVD., SUITE 400 LAFAYETTE, LA. 70506	LOUISIANA DEPARTMENT OF NATURAL RESOURCES COASTAL ENGINEERING DIVISION 617 NORTH 3RD STREET BATON ROUGE, LOUISIANA 70802	DEDICATED DREDGING ON THE BARATARIA BASIN LANDBRIDGE	PROJECT LAYOUT
		STATE PROJECT NUMBER: BA-36	DATE: JUNE 2009
DRAWN BY: KRISTI CANTU	DESIGNED BY: DAIN GILLEN, P.E. / APPROVED BY: MAURY CHATELLIER, P.E.	FEDERAL PROJECT NUMBER:	SHEET 2 OF 13

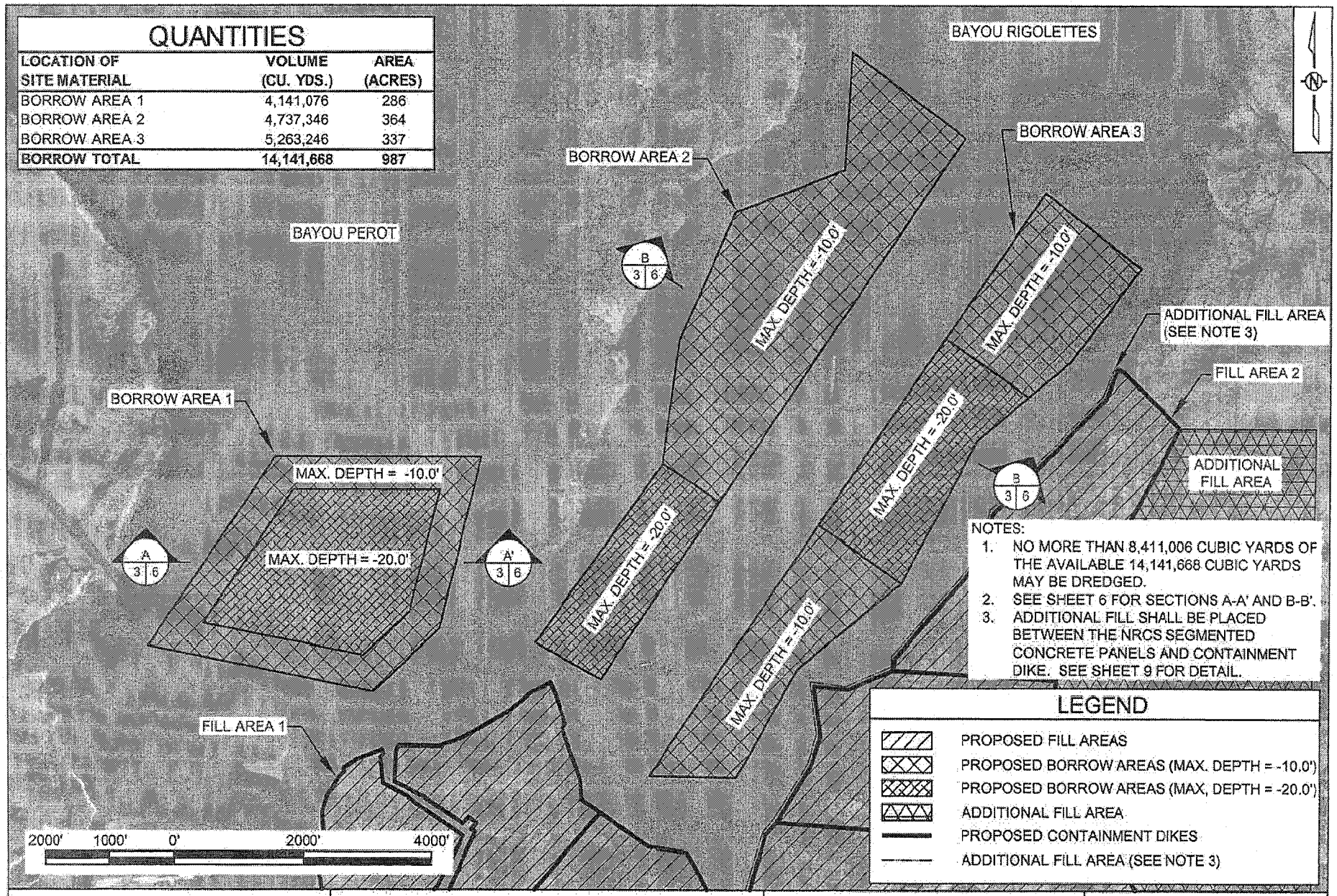

QUANTITIES

LOCATION OF SITE MATERIAL	VOLUME (CU. YDS.)	AREA (ACRES)
BORROW AREA 1	4,141,076	286
BORROW AREA 2	4,737,346	364
BORROW AREA 3	5,263,246	337
BORROW TOTAL	**14,141,668**	**987**

NOTES:

1. NO MORE THAN 8,411,006 CUBIC YARDS OF THE AVAILABLE 14,141,668 CUBIC YARDS MAY BE DREDGED.
2. SEE SHEET 6 FOR SECTIONS A-A' AND B-B'.
3. ADDITIONAL FILL SHALL BE PLACED BETWEEN THE NRCS SEGMENTED CONCRETE PANELS AND CONTAINMENT DIKE. SEE SHEET 9 FOR DETAIL.

LEGEND

- PROPOSED FILL AREAS
- PROPOSED BORROW AREAS (MAX. DEPTH = -10.0')
- PROPOSED BORROW AREAS (MAX, DEPTH = -20.0')
- ADDITIONAL FILL AREA
- PROPOSED CONTAINMENT DIKES
- ADDITIONAL FILL AREA (SEE NOTE 3)

APPLICATION BY:
U.S. FISH AND WILDLIFE SERVICE
646 CAJUNDOME BLVD., SUITE 400
LAFAYETTE, LA. 70506

LOUISIANA DEPARTMENT OF NATURAL RESOURCES
COASTAL ENGINEERING DIVISION
617 NORTH 3RD STREET
BATON ROUGE, LOUISIANA 70802

DEDICATED DREDGING ON THE BARATARIA BASIN LANDBRIDGE

BORROW AREA

STATE PROJECT NUMBER: BA-36

DATE: JUNE 2009

DRAWN BY: KRISTI CANTU

DESIGNED BY: DAIN GILLEN, P.E.

APPROVED BY: MAURY CHATELLIER, P.E.

FEDERAL PROJECT NUMBER:

SHEET 3 OF 13

QUANTITIES

LOCATION OF SITE MATERIAL	PREVIOUSLY PERMITTED VOLUME (CU. YDS.)	PREVIOUSLY PERMITTED AREA (ACRES)	ADDITIONAL ACREAGE (JUNE 2009)
FILL AREA 1	1,794,667	504	279
CONTAINMENT DIKES	540,945	N/A	N/A
FILL TOTAL	**2,335,612**	**504**	**279**
ACCESS DREDGING	**171,350**	**N/A**	**N/A**

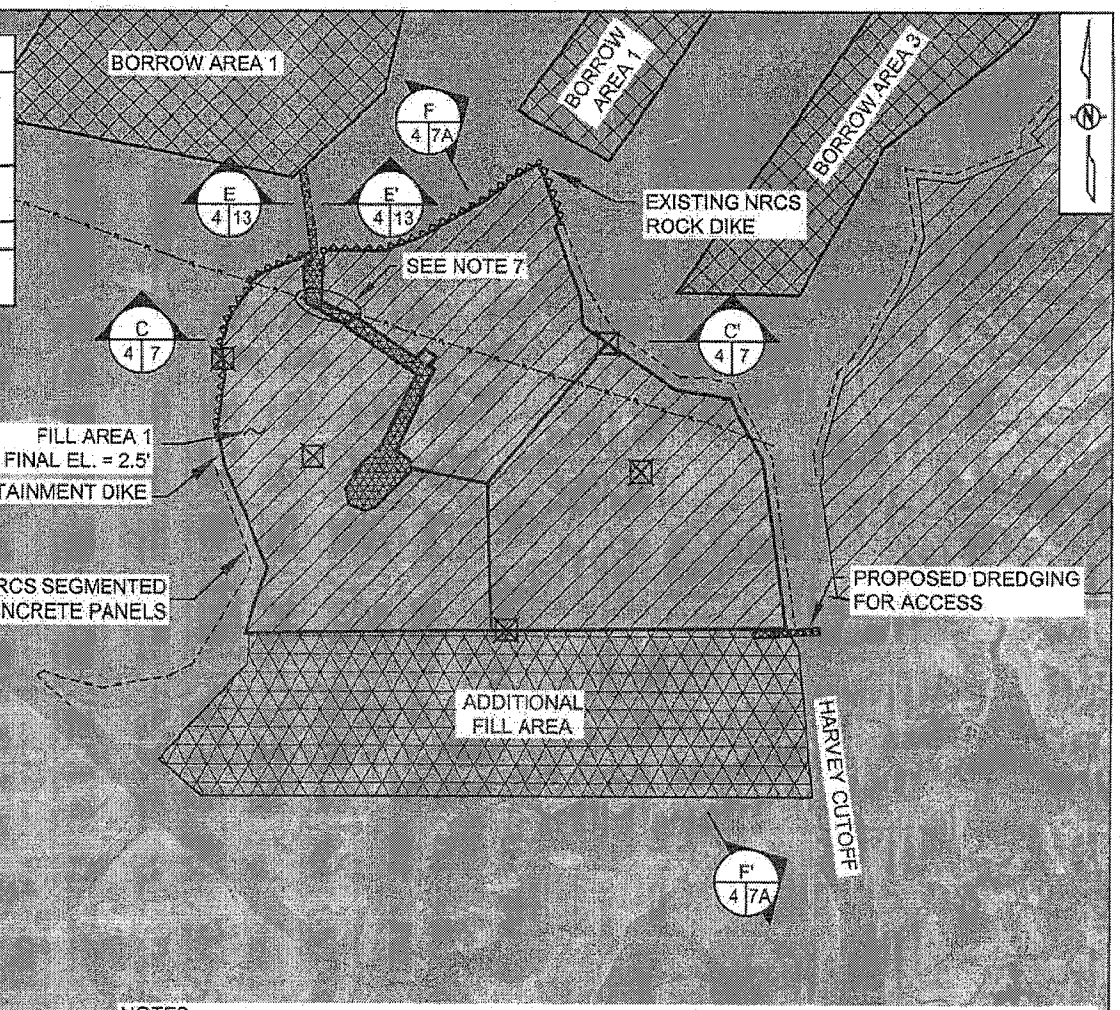

LEGEND

- PROPOSED FILL AREA 1
- PROPOSED BORROW AREAS
- PROPOSED DREDGING FOR ACCESS
- ADDITIONAL FILL AREA
- PROPOSED CONTAINMENT DIKES
- FUTURE NRCS SEGMENTED CONCRETE PANELS
- EXISTING NRCS ROCK DIKES
- PIPELINE
- SETTLEMENT PLATES

2000' 1000' 0' 2000' 4000'

NOTES:

1. CONTAINMENT DIKES TO BE IMPROVED AND/OR CONSTRUCTED TO ELEVATION +5.0 FT.
2. CONTAINMENT DIKES SHALL BE DEGRADED TO MARSH ELEVATION AFTER CONSTRUCTION.
3. TOE OF CONTAINMENT DIKES SHALL BE LOCATED A MINIMUM OF 30.0 FT. FROM TOE OF NRCS ROCK DIKES.
4. ALL ELEVATIONS ARE GIVEN IN THE NORTH AMERICAN VERTICAL DATUM OF 1988 (NAVD 88).
5. SETTLEMENT PLATES ARE TO BE INSTALLED WITHIN 100 FT. OF THE DEPICTED LOCATION.
6. SEE SHEET 7 FOR SECTION C-C'.
7. NO DREDGING WITHIN 25 FT. OF PIPELINE.

APPLICATION BY: U.S. FISH AND WILDLIFE SERVICE 646 CAJUNDOME BLVD., SUITE 400 LAFAYETTE, LA. 70506	LOUISIANA DEPARTMENT OF NATURAL RESOURCES COASTAL ENGINEERING DIVISION 617 NORTH 3RD STREET BATON ROUGE, LOUISIANA 70802	DEDICATED DREDGING ON THE BARATARIA BASIN LANDBRIDGE	FILL AREA 1 LAYOUT
		STATE PROJECT NUMBER: BA-36	DATE: JUNE 2009
DRAWN BY: KRISTI CANTU	DESIGNED BY: DAIN GILLEN, P.E. / APPROVED BY: MAURY CHATELLIER, P.E.	FEDERAL PROJECT NUMBER:	SHEET 4 OF 13

QUANTITIES

LOCATION OF SITE MATERIAL	PREVIOUSLY PERMITTED VOLUME (CU. YDS.)	PREVIOUSLY PERMITTED AREA (ACRES)	ADDITIONAL ACREAGE (JUNE 2009)
FILL AREA 2	2,794,491	742	636
CONTAINMENT DIKES	623,212	N/A	N/A
FILL TOTAL	3,417,703	742	636
ACCESS DREDGING	9,150		N/A

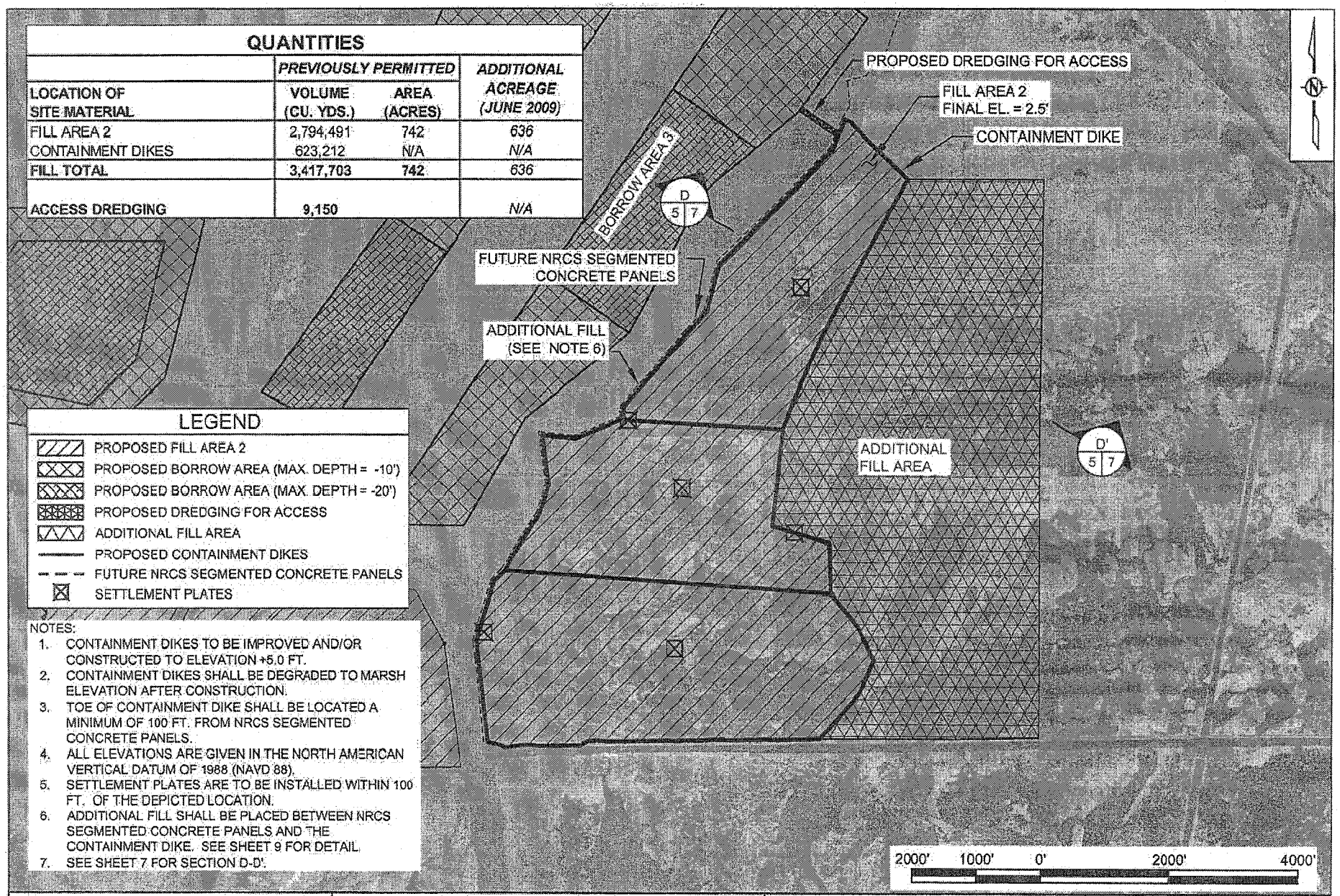

LEGEND

- PROPOSED FILL AREA 2
- PROPOSED BORROW AREA (MAX. DEPTH = -10')
- PROPOSED BORROW AREA (MAX. DEPTH = -20')
- PROPOSED DREDGING FOR ACCESS
- ADDITIONAL FILL AREA
- PROPOSED CONTAINMENT DIKES
- FUTURE NRCS SEGMENTED CONCRETE PANELS
- SETTLEMENT PLATES

NOTES:

1. CONTAINMENT DIKES TO BE IMPROVED AND/OR CONSTRUCTED TO ELEVATION +5.0 FT.
2. CONTAINMENT DIKES SHALL BE DEGRADED TO MARSH ELEVATION AFTER CONSTRUCTION.
3. TOE OF CONTAINMENT DIKE SHALL BE LOCATED A MINIMUM OF 100 FT. FROM NRCS SEGMENTED CONCRETE PANELS.
4. ALL ELEVATIONS ARE GIVEN IN THE NORTH AMERICAN VERTICAL DATUM OF 1988 (NAVD 88).
5. SETTLEMENT PLATES ARE TO BE INSTALLED WITHIN 100 FT. OF THE DEPICTED LOCATION.
6. ADDITIONAL FILL SHALL BE PLACED BETWEEN NRCS SEGMENTED CONCRETE PANELS AND THE CONTAINMENT DIKE. SEE SHEET 9 FOR DETAIL.
7. SEE SHEET 7 FOR SECTION D-D'.

APPLICATION BY: U.S. FISH AND WILDLIFE SERVICE, 646 CAJUNDOME BLVD., SUITE 400, LAFAYETTE, LA. 70506	LOUISIANA DEPARTMENT OF NATURAL RESOURCES, COASTAL ENGINEERING DIVISION, 617 NORTH 3RD STREET, BATON ROUGE, LOUISIANA 70802	DEDICATED DREDGING ON THE BARATARIA BASIN LANDBRIDGE	FILL AREA 2 LAYOUT
		STATE PROJECT NUMBER: BA-36	DATE: JUNE 2009
DRAWN BY: KRISTI CANTU	DESIGNED BY: DAIN GILLEN, P.E. / APPROVED BY: MAURY CHATELLIER, P.E.	FEDERAL PROJECT NUMBER:	SHEET 5 OF 13

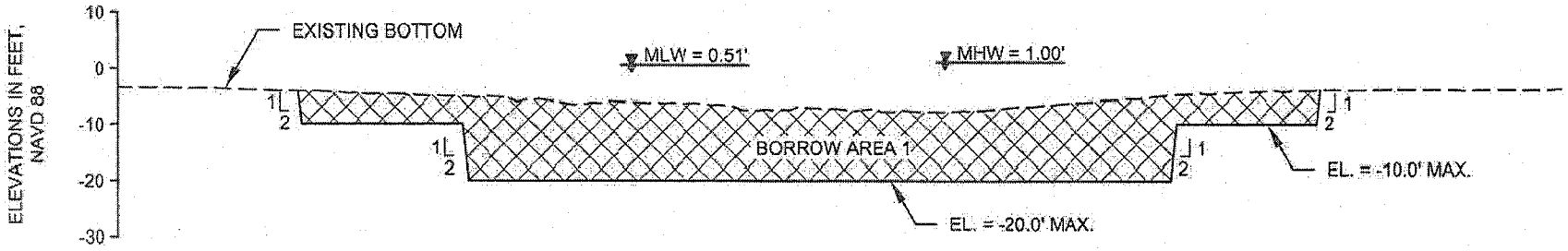

SECTION A-A'

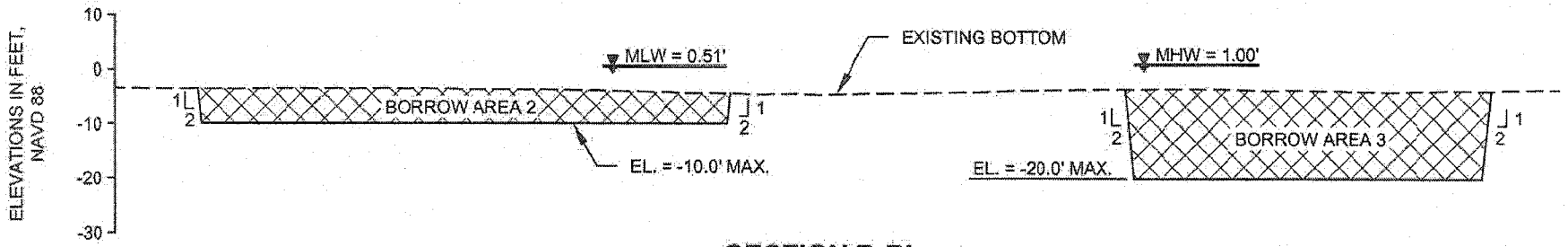

SECTION B-B'

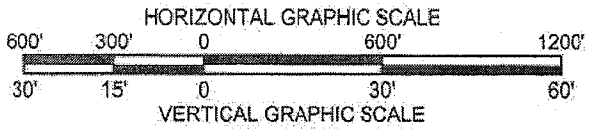

APPLICATION BY: U.S. FISH AND WILDLIFE SERVICE 646 CAJUNDOME BLVD., SUITE 400 LAFAYETTE, LA. 70506	LOUISIANA DEPARTMENT OF NATURAL RESOURCES COASTAL ENGINEERING DIVISION 617 NORTH 3RD STREET BATON ROUGE, LOUISIANA 70802	DEDICATED DREDGING ON THE BARATARIA BASIN LANDBRIDGE	BORROW AREA SECTIONS
		STATE PROJECT NUMBER: BA-36	DATE: JULY 2008
DRAWN BY: KRISTI CANTU	DESIGNED BY: DAIN GILLEN, P.E. / APPROVED BY: LUKE LEBAS, P.E.	FEDERAL PROJECT NUMBER:	SHEET 6 OF 13

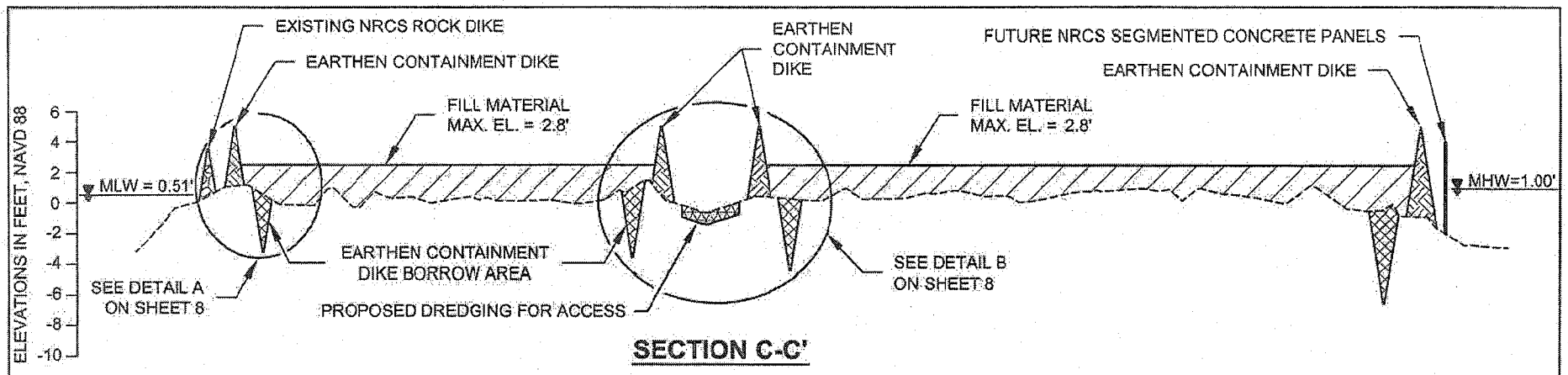

SECTION C-C'

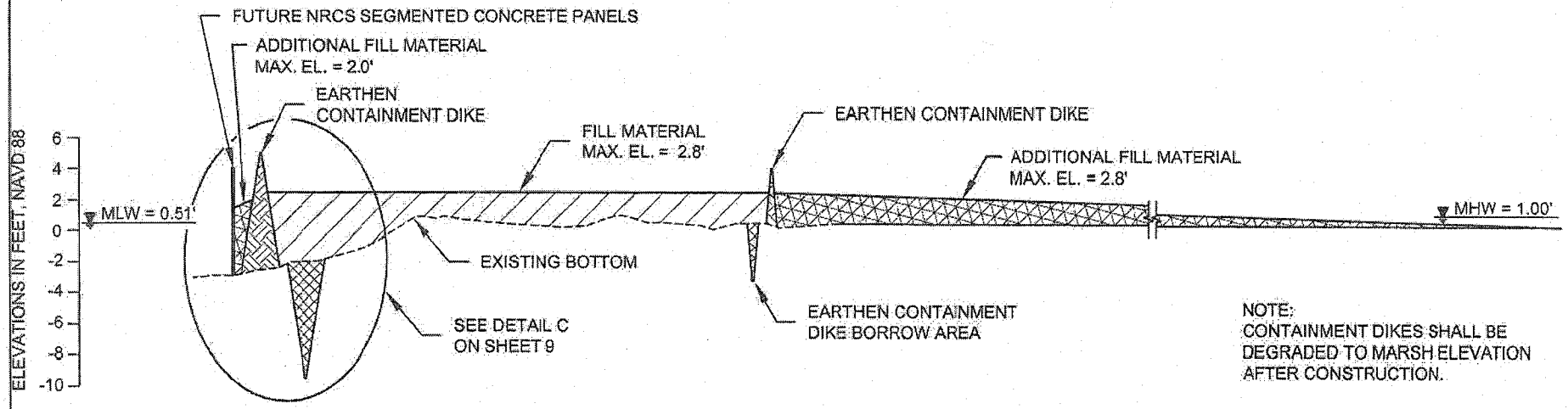

NOTE:
CONTAINMENT DIKES SHALL BE DEGRADED TO MARSH ELEVATION AFTER CONSTRUCTION.

SECTION D-D'

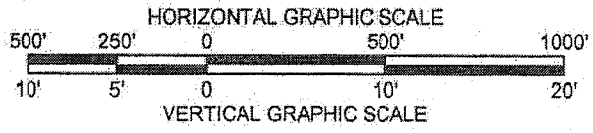

APPLICATION BY: U.S. FISH AND WILDLIFE SERVICE 646 CAJUNDOME BLVD., SUITE 400 LAFAYETTE, LA. 70506	LOUISIANA DEPARTMENT OF NATURAL RESOURCES COASTAL ENGINEERING DIVISION 617 NORTH 3RD STREET BATON ROUGE, LOUISIANA 70802	DEDICATED DREDGING ON THE BARATARIA BASIN LANDBRIDGE	FILL AREA SECTIONS
		STATE PROJECT NUMBER: BA-36	DATE: JUNE 2009
DRAWN BY: KRISTI CANTU	DESIGNED BY: DAIN GILLEN, P.E. / APPROVED BY: MAURY CHATELLIER, P.E.	FEDERAL PROJECT NUMBER:	SHEET 7 OF 13

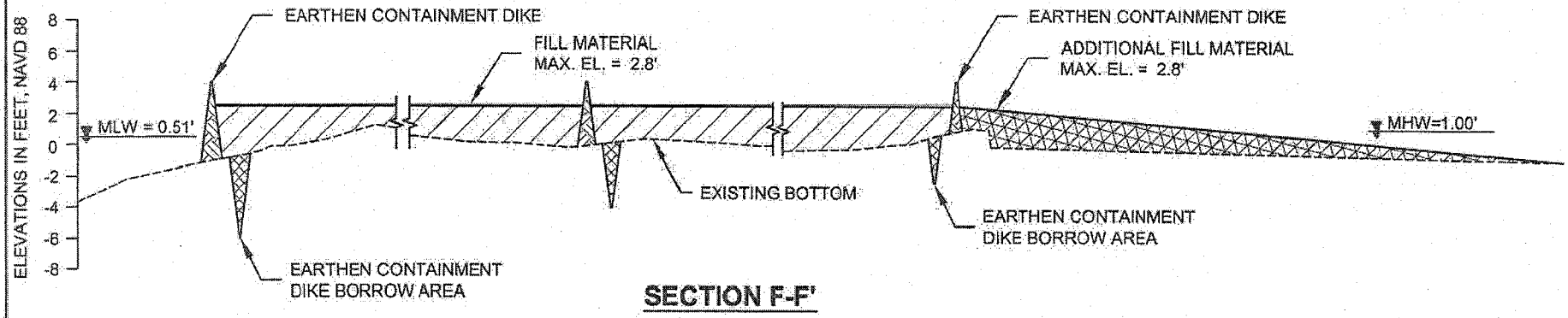

SECTION F-F'

NOTE:
CONTAINMENT DIKES SHALL BE DEGRADED TO MARSH ELEVATION AFTER CONSTRUCTION.

HORIZONTAL GRAPHIC SCALE
500' 250' 0 500' 1000'
10' 5' 0 10' 20'
VERTICAL GRAPHIC SCALE

APPLICATION BY: U.S. FISH AND WILDLIFE SERVICE 646 CAJUNDOME BLVD., SUITE 400 LAFAYETTE, LA. 70506	LOUISIANA DEPARTMENT OF NATURAL RESOURCES COASTAL ENGINEERING DIVISION 617 NORTH 3RD STREET BATON ROUGE, LOUISIANA 70802		DEDICATED DREDGING ON THE BARATARIA BASIN LANDBRIDGE	FILL AREA SECTIONS
			STATE PROJECT NUMBER: BA-36	DATE: JUNE 2009
DRAWN BY: KRISTI CANTU	DESIGNED BY: DAIN GILLEN, P.E.	APPROVED BY: MAURY CHATELLIER, P.E.	FEDERAL PROJECT NUMBER:	SHEET 7A OF 13

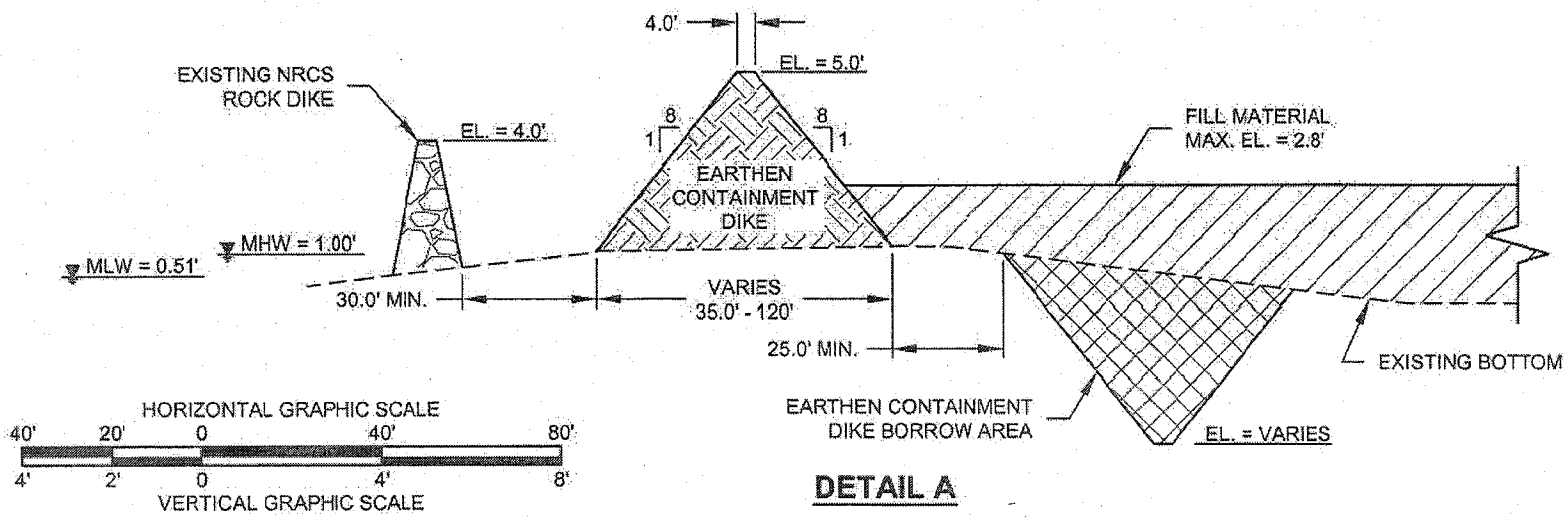

DETAIL A

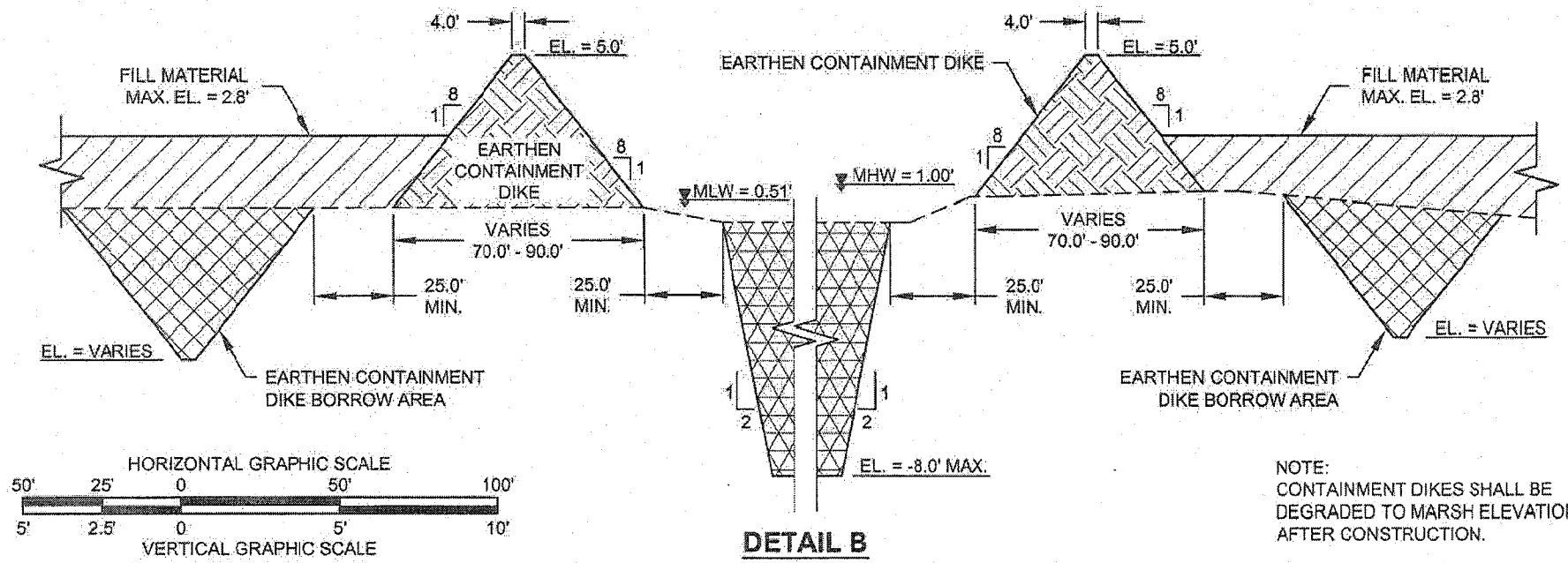

DETAIL B

NOTE:
CONTAINMENT DIKES SHALL BE DEGRADED TO MARSH ELEVATION AFTER CONSTRUCTION.

APPLICATION BY: U.S. FISH AND WILDLIFE SERVICE 646 CAJUNDOME BLVD., SUITE 400 LAFAYETTE, LA. 70506	LOUISIANA DEPARTMENT OF NATURAL RESOURCES COASTAL ENGINEERING DIVISION 617 NORTH 3RD STREET BATON ROUGE, LOUISIANA 70802	DEDICATED DREDGING ON THE BARATARIA BASIN LANDBRIDGE	DETAILS
		STATE PROJECT NUMBER: BA-36	DATE: JULY 2008
DRAWN BY: KRISTI CANTU	DESIGNED BY: DAIN GILLEN, P.E. / APPROVED BY: LUKE LEBAS, P.E.	FEDERAL PROJECT NUMBER:	SHEET 8 OF 13

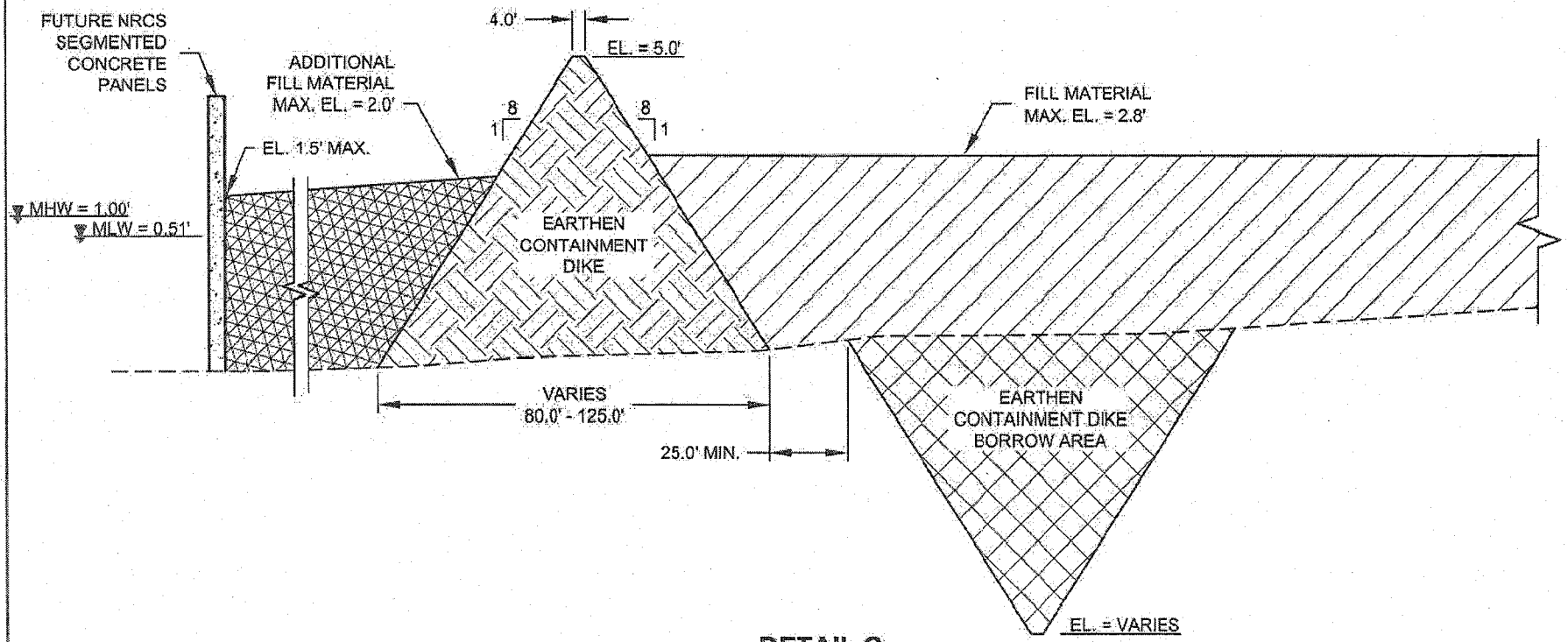

DETAIL C

HORIZONTAL GRAPHIC SCALE

50' 25' 0 50' 100'

4' 2' 0 4' 8'

VERTICAL GRAPHIC SCALE

NOTE:
CONTAINMENT DIKES SHALL BE DEGRADED TO MARSH ELEVATION AFTER CONSTRUCTION.

APPLICATION BY: U.S. FISH AND WILDLIFE SERVICE 646 CAJUNDOME BLVD., SUITE 400 LAFAYETTE, LA. 70506	LOUISIANA DEPARTMENT OF NATURAL RESOURCES COASTAL ENGINEERING DIVISION 617 NORTH 3RD STREET BATON ROUGE, LOUISIANA 70802	DEDICATED DREDGING ON THE BARATARIA BASIN LANDBRIDGE	DETAILS
		STATE PROJECT NUMBER: BA-36	DATE: JUNE 2009
DRAWN BY: KRISTI CANTU	DESIGNED BY: DAIN GILLEN, P.E. / APPROVED BY: MAURY CHATELLIER, P.E.	FEDERAL PROJECT NUMBER:	SHEET 9 OF 13

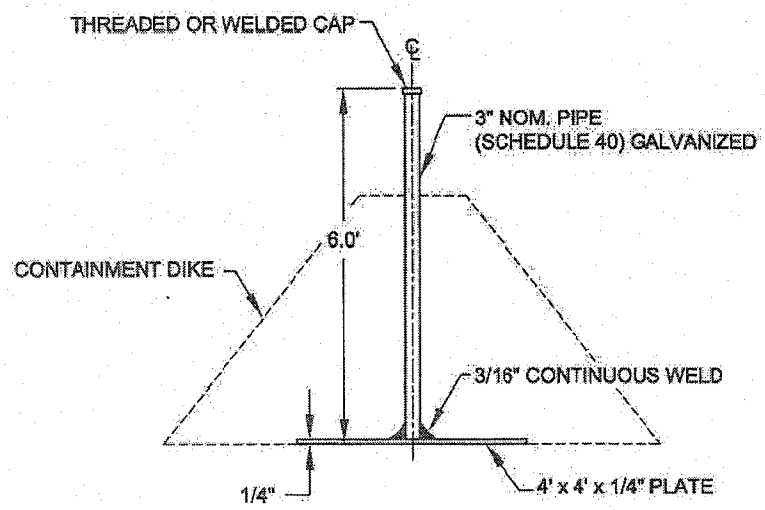

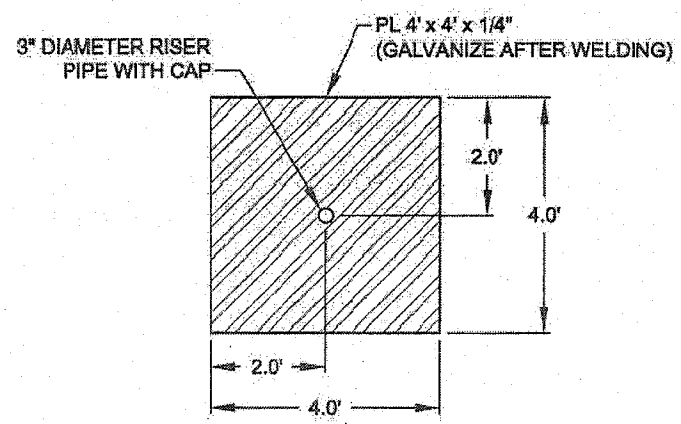

SETTLEMENT PLATE

NOT TO SCALE

NOTE:
SEE SHEETS 4 AND 5 FOR
SETTLEMENT PLATE LOCATIONS.

APPLICATION BY: U.S. FISH AND WILDLIFE SERVICE 646 CAJUNDOME BLVD., SUITE 400 LAFAYETTE, LA. 70506	LOUISIANA DEPARTMENT OF NATURAL RESOURCES COASTAL ENGINEERING DIVISION 617 NORTH 3RD STREET BATON ROUGE, LOUISIANA 70802		DEDICATED DREDGING ON THE BARATARIA BASIN LANDBRIDGE	DETAILS
			STATE PROJECT NUMBER: BA-36	DATE: JULY 2008
DRAWN BY: KRISTI CANTU	DESIGNED BY: DAIN GILLEN, P.E.	APPROVED BY: LUKE LEBAS, P.E.	FEDERAL PROJECT NUMBER:	SHEET 10 OF 13

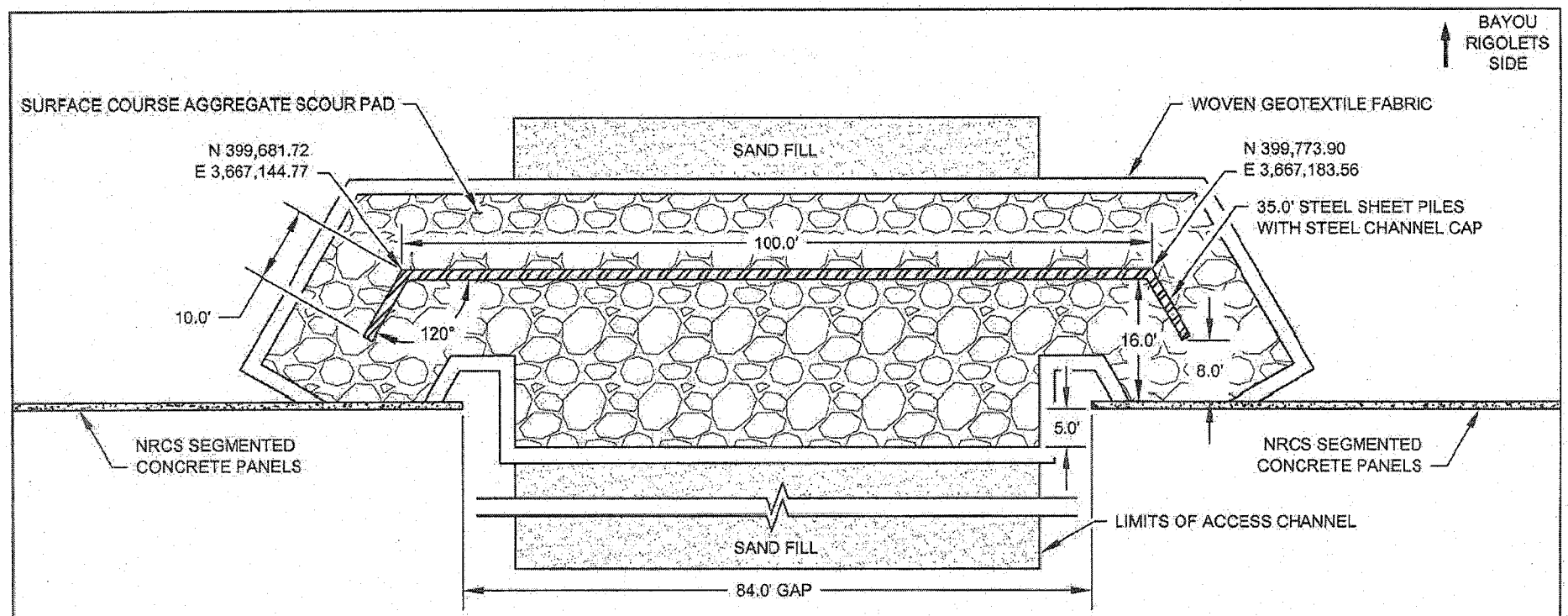

ACCESS CHANNEL CLOSURE LAYOUT
PLAN VIEW

LANDWARD SIDE

20' 10' 0' 20' 40'

QUANTITIES

MATERIAL	VOLUME (CU. YDS.)
SURFACE COURSE AGGREGATE	300
SAND	1,050

LEGEND

- NRCS SEGMENTED CONCRETE PANELS
- STEEL SHEET PILES
- SURFACE COURSE AGGREGATE SCOUR PAD
- SAND FILL

NOTES:

1. ALL ELEVATIONS SHOWN ARE IN THE NORTH AMERICAN VERTICAL DATUM OF 1988, U.S. SURVEY FEET.
2. AFTER INSTALLATION OF SHEET PILES, SAND SHALL BE USED TO FILL AT LEAST 50 FEET BEHIND THE PILES AND 20 FEET IN FRONT OF THE PILES UP TO A MINIMUM ELEVATION OF -2.0' NAVD88.
3. SURFACE COURSE AGGREGATE SHALL BE PLACED TO A ELEVATION OF 0.0' WITH A TOLERANCE OF ± 0.25',
4. SURFACE COURSE AGGREGATE SHALL NOT BE DROPPED FROM HIGHER THAN ONE FOOT DURING PLACEMENT.
5. SURFACE COURSE AGGREGATE SHALL EXTEND FROM THE WINGWALLS ON EACH END OF THE CLOSURE UNTIL IT MEETS THE SCOUR PAD FROM THE NRCS SEGMENTED CONCRETE PANELS. IF A SCOUR PAD IS NOT PRESENT, THE SURFACE COURSE AGGREGATE SHALL EXTEND TO THE NRCS SEGMENTED CONCRETE PANELS.

APPLICATION BY: U.S. FISH AND WILDLIFE SERVICE 646 CAJUNDOME BLVD., SUITE 400 LAFAYETTE, LA. 70506	LOUISIANA DEPARTMENT OF NATURAL RESOURCES COASTAL ENGINEERING DIVISION 617 NORTH 3RD STREET BATON ROUGE, LOUISIANA 70802		DEDICATED DREDGING ON THE BARATARIA BASIN LANDBRIDGE	FILL AREA SECTIONS
			STATE PROJECT NUMBER: BA-36	DATE: JULY 2008
DRAWN BY: KRISTI CANTU	DESIGNED BY: DAIN GILLEN, P.E.	APPROVED BY: LUKE LEBAS, P.E.	FEDERAL PROJECT NUMBER:	SHEET 11 OF 13

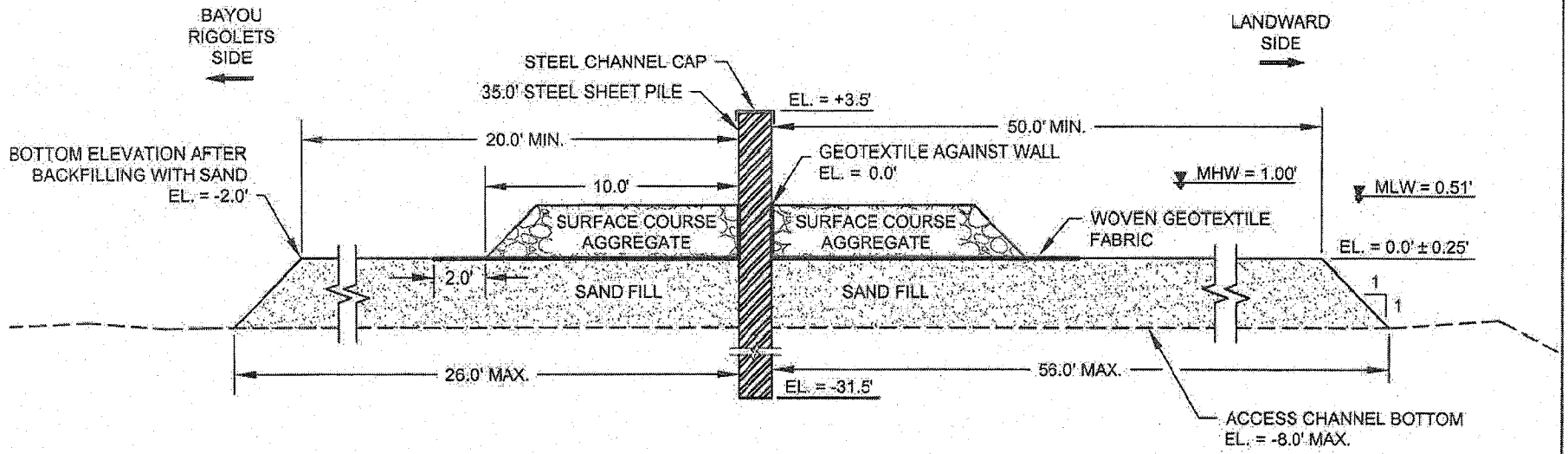

ACCESS CHANNEL CLOSURE
TYPICAL SECTION

NOT TO SCALE

NOTES:

1. ALL ELEVATIONS SHOWN ARE IN THE NORTH AMERICAN VERTICAL DATUM OF 1988, U.S. SURVEY FEET.
2. AFTER INSTALLATION OF SHEET PILES, SAND SHALL BE USED TO FILL AT LEAST 50 FEET BEHIND THE PILES AND 20 FEET IN FRONT OF THE PILES UP TO A MINIMUM ELEVATION OF -2.0' NAVD88.
3. SURFACE COURSE AGGREGATE SHALL BE PLACED TO A ELEVATION OF 0.0' WITH A TOLERANCE OF ± 0.25'.
4. SURFACE COURSE AGGREGATE SHALL NOT BE DROPPED FROM HIGHER THAN ONE FOOT DURING PLACEMENT.
5. SURFACE COURSE AGGREGATE SHALL EXTEND FROM THE WINGWALLS ON EACH END OF THE CLOSURE UNTIL IT MEETS THE SCOUR PAD FROM THE NRCS SEGMENTED CONCRETE PANELS. IF A SCOUR PAD IS NOT PRESENT, THE SURFACE COURSE AGGREGATE SHALL EXTEND TO THE NRCS SEGMENTED CONCRETE PANELS.

LEGEND

- EXISTING BOTTOM
- WOVEN GEOTEXTILE FABRIC
- STEEL SHEET PILES
- SURFACE COURSE AGGREGATE SCOUR PAD
- SAND FILL

APPLICATION BY: U.S. FISH AND WILDLIFE SERVICE 646 CAJUNDOME BLVD., SUITE 400 LAFAYETTE, LA. 70506	LOUISIANA DEPARTMENT OF NATURAL RESOURCES COASTAL ENGINEERING DIVISION 617 NORTH 3RD STREET BATON ROUGE, LOUISIANA 70802		DEDICATED DREDGING ON THE BARATARIA BASIN LANDBRIDGE	FILL AREA SECTIONS
			STATE PROJECT NUMBER: BA-36	DATE: JULY 2008
DRAWN BY: KRISTI CANTU	DESIGNED BY: DAIN GILLEN, P.E.	APPROVED BY: LUKE LEBAS, P.E.	FEDERAL PROJECT NUMBER:	SHEET 12 OF 13

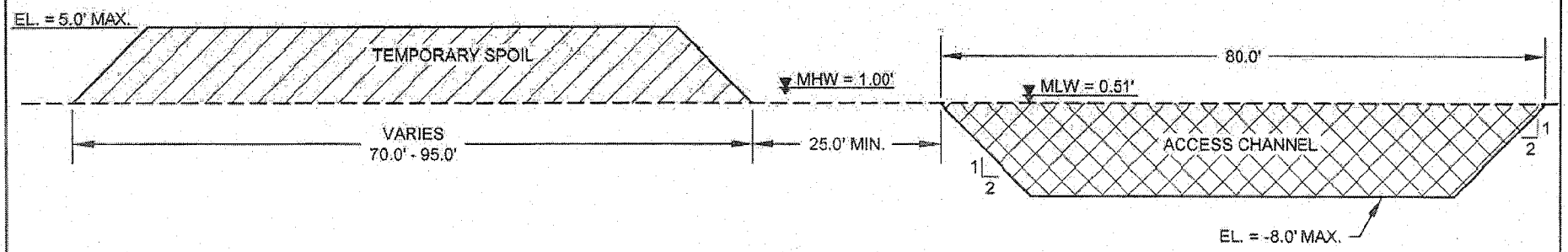

SECTION E-E'

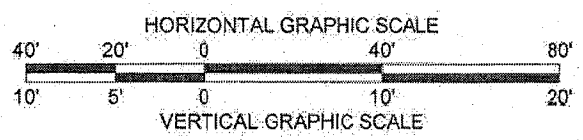

NOTE:
ACCESS CHANNEL SHALL BE BACKFILLED WITH TEMPORARY SPOIL FOLLOWING PROJECT CONSTRUCTION.

APPLICATION BY: U.S. FISH AND WILDLIFE SERVICE 646 CAJUNDOME BLVD., SUITE 400 LAFAYETTE, LA. 70506	LOUISIANA DEPARTMENT OF NATURAL RESOURCES COASTAL ENGINEERING DIVISION 617 NORTH 3RD STREET BATON ROUGE, LOUISIANA 70802		DEDICATED DREDGING ON THE BARATARIA BASIN LANDBRIDGE	ACCESS CHANNEL SECTION
			STATE PROJECT NUMBER: BA-36	DATE: JULY 2008
DRAWN BY: KRISTI CANTU	DESIGNED BY: DAIN GILLEN, P.E.	APPROVED BY: LUKE LEBAS, P.E.	FEDERAL PROJECT NUMBER:	SHEET 13 OF 13