5.0 STRUCTURES

5.1 In General

This guidance applies to structures whose primary function is hurricane flood protection in the New Orleans area, which includes T, L & I-walls, sluice gates, fronting protection and flood gates. Sector gates and other navigable waterway structures shall have all design criteria approved prior to design.

The Corps of Engineers is governed by engineering regulations (ER's), engineering manuals (EM's), engineering technical letters (TL's) and engineering circulars (EC's). These Corps publications are available on line at the following web site: http://www.usace.army.mil/inet/usace-docs. The designer is responsible for compliance with all civil works engineering regulations, circulars, technical letters and manuals (Corps publications). For convenience, this document highlights certain Corps publications that engineers should be aware of. Also, specific design criteria are identified in the following sections that may not agree with the Corps publications; in this case, the more conservative criteria shall be applied. Industry standards shall apply when Corps criteria is not applicable.

5.1.1 Sampling of References

USACE Publications

- EM 1110-2-2104, Strength Design for Reinforced Concrete Hydraulic Structures, June 92 (Including Change 1, Aug 03)
- EM 1110-2-2105, Design of Hydraulic Steel Structures (including Change 1), May 94
- EM 1110-2-2502, Retaining and Flood Walls, Sept. 89
- EM 1110-2-2906, Design of Pile Foundations, Jan. 91
- EM 1110-2-2503, Design of Sheet Pile Cellular Structures Cofferdams & Retaining Structures, Sept. 89
- EM 1110-2-2504, Design of Sheet Pile Walls, Mar. 94
- EM 1110-2-2705, Structural Design of Closure Structures for Local Flood Protection Projects, Mar. 94
- EM 1110-2-1901, Seepage Analysis and Control for Dams, Apr 93
- EM 1110-2-2100, Stability Analysis of Concrete Hydraulic Structures, Dec 05

Technical Publications

- American Concrete Institute, Building Code and Commentary, ACI 318-02
- American Institute of Steel construction, Manual of Steel Construction (9th Ed.)
- American Welding Society, AWS D1.1 (2006)

- American Welding Society, AWS D1.5 (2002)
- ASCE 7, Minimum Design Loads for Buildings and Other Structures

Computer Software

- CE Pile Group Analysis Program, "CPGA"
- CE Structural Analysis Program, "C-Frame"
- CE Strength Analysis of Concrete Structural Elements, "CGSI"
- CE Sheet Pile Wall Design/Analysis Program, "CWALSHT"
- Structural Analysis and Design Software, "STAAD"
- Ensoft, "Group 7.0"
- Additional approved USACE programs

5.1.2 Survey Criteria

Surveys shall conform to "USACE New Orleans District Guide for Minimum Survey Standards" (see Section 9) and the following guidance at a minimum. A typical scope of services for surveys in support of structural designs is included in Section 9.4.

5.1.3 General Design Criteria

Walls shall be constructed using the latest datum from Permanent Benchmarks certified by NGS - NAVD88. A total of three Permanent Benchmarks are required, one for design/construction and two for verification.

The following is a summary of protection heights for various wall systems:

- I-Walls – 4 ft. maximum (includes required overbuild)
- T-Walls – No height limit; Typically 4 ft. and greater
- L-Walls / Kicker Pile Walls – 8 ft. maximum (includes required overbuild)

The above permitted heights are measured on the protected side of the wall. The flood side height may be increased by 2 feet for both I-walls and L-Walls.

Structural Superiority – All new structures that are difficult to construct due to their nature, such as railroad and highway gates, pump station fronting protection, sector gates, utility crossings, etc., shall have a minimum 2 ft. overbuild. Overbuild height shall be included in all top of wall load cases. All variances shall be approved by the USACE engineer of record.

All I-walls shall have 6 in. minimum overbuild. I-walls shall be symmetrical so not to create an unbalance concrete section.

T-walls are the preferred walls where there is the potential for barge/boat impact loading or unbalanced forces resulting from a deep-seated stability analysis.

Global stability, as it affects T-wall foundation design, is addressed in Section 3.4.3 T-Wall Design Procedure.

L-Walls may also be used where there is the potential for barge/boat impact loading; however, they shall **not** be used where an unbalanced force is present resulting from a deep-seated stability analysis.

Typically, I-walls shall **not** be used on navigable waterways or where there is the potential for barge/boat impact loading unless measures (such as berms for grounding vessels or separate pile fender systems) are taken to protect the wall. However, I-walls are acceptable as tie-ins to levee embankments. Site and soil conditions will dictate their use in these applications.

Lengths of L-Wall or T-wall monoliths should generally be 40 to 60 feet between expansion joints. I-wall monoliths should generally be 30 to 40 feet. At PI Corners, walls shall extend monolithically past the corner a minimum of 5 feet, but not less than two full sheet pilings and at least one row of bearing piles.

Geotechnical Engineers shall minimize the height of the wall system by designing the largest earthen section that is practical and stable for each individual project.

Seepage, global stability, heave, settlement and any other pertinent geotechnical analysis shall be performed in order to ensure that the overall stability of the system is designed to meet all Corps criteria.

Flood wall protection systems are dedicated single-purpose structures and shall not be dependent on or connected to other (non-Federal) structural or geotechnical features that affect their intended performance or stability.

5.2 T-wall & L-wall Design Criteria

T-walls, whose primary function in the New Orleans area is flood protection, are pile founded structures that consist of a reinforced concrete wall and base with steel sheet pile cut-off. Steel or prestressed concrete piles are battered towards the protected and flood sides and are the main components that support the concrete wall and base. The primary purpose of the steel sheet piling is to provide a seepage cutoff beneath the wall. T-wall foundation design procedures are included in Section 3.4. Minimum piling requirements for structures resisting unbalanced global stability loads are addressed in Section 3.4.3.

Previous experience has shown T-walls to perform well; even in situations where the floodwall was overtopped and experienced loadings beyond their intended design. T-walls are typically considered for a floodwall system in cases where there is a potential for barge or boat impact or there is a potential of foundation instability due to hydraulic loading.

Walls of any type should be avoided along major navigation routes. Where the situation is unavoidable, impact barriers shall be constructed ahead of the floodwall. Impact barriers shall be designed to resist representative barge traffic; the minimum impact force is 125 kips without overstress. The dolphins shall be stand along structures with no capacity to redistribute the load. Impact loads based on energy equations (vessel velocities and mass) that exceed the minimum shall be permitted a 133% overstress. Earthen impact barriers may be used, but shall be constructed to the Still Water Level.

All other walls shall be designed using the impact loads shown in Section 5.9 "Boat/Barge Impact Loading Tables & Maps."

L-walls are similar to T-walls except that the steel sheet pile replaces the flood side pile row.

5.2.1 Loading Conditions

1) Load Cases. See Section "5.7 General Load Case Tables."

2) Impact Cases. See Section "5.9 Boat/Barge Impact Loading Tables & Maps."

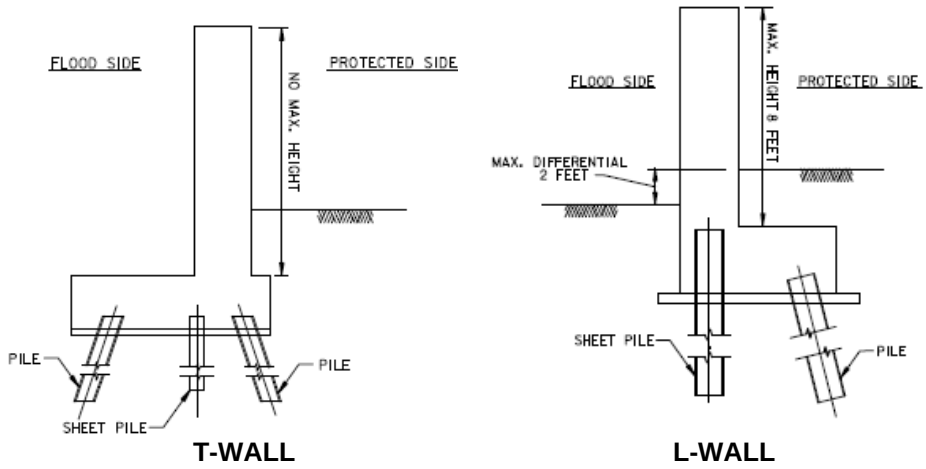

Figure 5.1 Typical T-Wall and L-Wall configuration

5.2.2 Pile Design – Precast-Prestress Concrete, Steel H and Pipe

The factors of safety with no overstress for all MVN projects are:

	With Pile Load Test	W/O Pile Load Test
Q-Case	2.0*	3.0
S-Case	1.5	1.5

* FOS = 2.5 must be used with a PDA test for the Q-case (for compression piles only)

Spiral Welded pipe shall not be used.

To assure consistency, actual unfactored service loads shall be used in any pile analysis. See Sections 5.7 and 5.9 for further details on required FOS with various overstress conditions.

When using any computer program, the unfactored soil properties shall be inputted, except for the Subgrade Modulus (E_s) which may be reduced for group effects.

Reductions for pile spacing and unstable soil wedges are included in Section 3.4.3.

For T-wall foundations, the designers may utilize either a pile stiffness based program, such as CPGA, or a program that models soil resistance as springs, such as G-pile. When both analysis types are used, such as required when unbalanced loads are present, the more conservative pile tip shall be included in the final design.

Unless considered in the pile load test, the increased friction capacity due to the added length of a battered pile versus the vertical component shall be ignored.

Piles battered at a slope steeper than 1H on 8V shall be analyzed as vertical piles.

Weight of piles may be neglected in pile design.

Maximum structural deflections at pile heads:

Normal case, no overstress allowed
Vertical – 0.50” or less
Horizontal – 0.75” or less

Case with 16⅔ % overstress allowed
Vertical – 0.583” or less
Horizontal – 0.875” or less

Case with 33⅓ % overstress allowed
Vertical – 0.67” or less
Horizontal – 1.0” or less

Larger deflections may be allowed for design checks if stresses in the structure and piles are not excessive. Larger deflections are limited to values that remain in the elastic state of the soil.

A minimum pile embedment of 9” is required. The connection may be assumed to be pinned if the embedment is between 9” and 12”. A pile embedment length equal to or greater than twice the pile depth or diameter is required to develop full fixity for a pile embedded in the base of the structure. Any embedment depth between these two options must be researched to determine the applicable connection. CERL Technical Report M-339, dated Feb 1984 and entitled “Fixity of Members Embedded in Concrete, is a recommended information source. The embedded portion of a pile consists of the solid concrete or steel section and does not included the tension hooks, see Figure 5.2.

The moment from the piles transferred into the base slab must be considered when designing the concrete reinforcement. Care must be taken to ensure proper moment orientation. A pile moment which is beneficial to the design shall be neglected.

Tension hooks shall be designed to handle the maximum tensile pile load on the monolith. Also, tension hooks shall be flat bars with a minimum 3/8 inch bar thickness.

A minimum of 2 piles rows shall have tension connectors. When 3 or more rows of piles are present, tension connectors are required on only tension piles. Tension connectors are not required on compression piles unless any load case for a particular pile induces a compressive load in the pile less than 15% of the maximum compressive load in that pile.

Splices are prohibited in the upper third of a pile and also in the portion of the pile above the critical failure plane (as described in Section 3.4.3) plus 5 additional feet of embedment.

Splices shall be capable of developing the full strength of the pile in tension, shear and bending.

Handling holes are permitted in the embedded depth of the pile and in the lower half of the pile. The total hole area shall not exceed 15% of the flange area. Holes are prohibited when driving stresses exceed 90% Fy.

Pipe piles conforming to ASTM A-252 require increased non-destructive testing of the manufacturer lengths. All shop welded transverse joints shall be 100% visually inspected and 25% of the weld length shall be ultrasonic tested. Acceptance criteria shall conform to American Welding Society (AWS) Code D1.1.

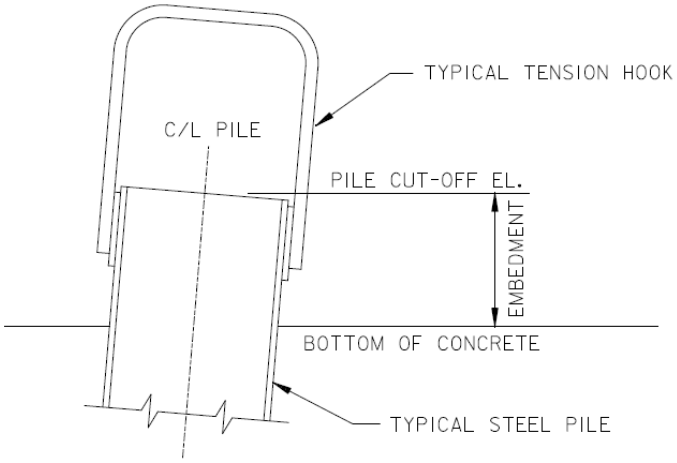

Figure 5.2 Depth of pile embedment

5.2.3 T-wall Sheet Piling Section

The primary purpose of the steel sheet piling is a pile acting to control seepage. Piping and Seepage Analysis methods are described in Section 3.4.2.5.

If unbalanced forces exist, design the steel sheet piling cut-off to extend to the critical failure plane plus embedment into the stable layer below. Embedment minimum is 5 feet. The critical failure plane is described in Section 3.4.3.

If no unbalanced forces exist, a minimum PZ-22 hot rolled sheet piling shall be utilized for seepage cut-off.

The sheet pile shall be adequately anchored into the base slab to resist pull out. This can be achieved by passing U-bars through existing handling holes or burning holes in the sheet pile, if necessary.

5.2.4 L-wall Sheet Piling Section

The steel sheet piling is a pile acting to control seepage and provide support to the structure.

The sheet pile shall be designed to take the tension loads resulting from an inverted T-Wall analysis (CPGA) for the listed loading conditions. In addition, the sheet pile shall be designed as a compression member for the dead load case.

The minimum sheet piling section shall be a hot rolled PZ–27.

Due to the embedment of the sheet pile, approximately 2.75 to 3.0 feet into the base slab, the sheet pile should be assumed to be a fixed pile in the CPGA program.

The sheet pile properties should be assumed to be the summation of the pile properties for the kicker pile spacing.

The sheet pile shall be adequately anchored into the base slab to resist tension loads. This can be achieved by the use of welded studs or welded tension connectors.

5.2.5 Sheet Piling Tip Penetration

See the Geotechnical Section of this document for sheet pile tip penetration requirements for T-walls & L-walls.

5.3 I-wall Design Criteria

5.3.1 Loading Conditions

(1) Load Cases. See Section “5.7 General Load Case Tables.”

(2) Impact Cases. See Section “5.9 Boat/Barge Impact Loading Tables & Maps.”

5.3.2 I-wall Sheet Piling Section

The steel sheet piling is a pile acting to control seepage and provide support to the structure.

Design the steel sheet piling using the moments and shears developed by the factored soil properties in the geotechnical design for tip penetration.

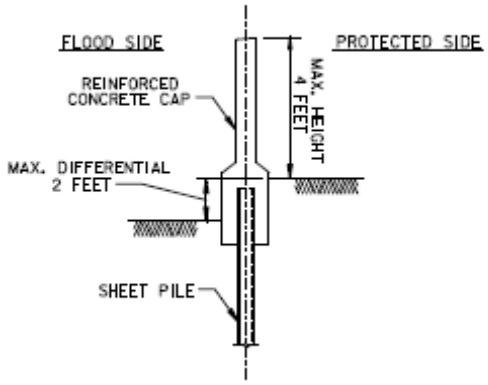

Figure 5.3 Typical configuration

The minimum sheet piling type shall be hot rolled PZ–27. However, I-walls **within** the levee tie-ins may have as a minimum a hot rolled PZ-22.

The sheet pile shall be adequately anchored into the concrete stem to resist pull out. A minimum embedment of 2'-9" shall be used on PZ-35 or smaller sheet pile. Bond development shall be checked for larger sheets. The projected area of the sheet piling shall be sufficiently embedded to develop bond between the piling and concrete cap adequate to resist the moment couple force. Additionally, U-bars shall be passed through existing handling holes or by burning holes in the sheet pile.

I-wall sheet pile shall be designed such that settlement is limited to an acceptable amount and differential settlement is negligible. Settlement of the cap should be less than 6 inches. Deviations shall be approved in advance by the USACE engineer of record. Concrete capping of walls shall be delayed in levees with anticipated settlement until movement has subsided. In the interim, the sheet piling shall be extended to the project Design Grade.

Maximum horizontal displacement shall be determined by USACE structural engineer of record.

5.3.3 I-wall Sheet Piling Tip Penetration

See the Geotechnical Section of this document for sheet pile tip penetration requirements for I-walls.

5.3.4 Reinforced Concrete Section

It is recommended that all I-walls shall be at least 2 ft. thick. There shall be a minimum 6" of concrete clear over the sheet piling section.

5.4 Temporary Retaining Structure (TRS) Design Criteria

A TRS is used for braced excavation construction purposes. The TRS design is the responsibility of the contractor but shall be submitted for approval. Where applicable, construction live loads shall be considered in the TRS design; a common minimum is 200 pounds per square foot. Actual equipment loads shall be verified and used. For braced excavations constructed in water, only hot-rolled piling shall be permitted. Boat impact shall be applied where applicable unless protective marine fenders are included in the TRS design.

5.4.1 General Notes (Flood Protection)

TRS walls that serve as interim flood protection must comply with interim design guidelines dated 20 April 2006 and supplemented with Phase 1 design criteria dated 7 Feb 2007.

Areas below the required flood protection elevation will be considered breaches in the protection. Contractors will be permitted to allow an area in the existing flood protection to fall below the required elevation provided that area can be closed with steel sheet piling in a maximum of forty-eight (48) continuous hours. The length of the breech shall not exceed 300'. The interim protection shall be built to the lesser of the height of the adjacent levee/floodwalls or the 100 year (2011) Still Water Level (mean surge).

The sheet pile materials for closing such breaches shall be stockpiled at the site. Plans for closing breaches in the floodwall shall be updated periodically to reflect the status of construction progress.

The Contractor shall develop and submit for approval, plans, including methods, equipment, materials and actions to close breaches in the event that an impending storm or high water event threatens the area. Prior to removing any existing flood protection, the Contractor shall have the plan of interim protection approved.

The option or requirement to flood an excavation during a potential flood event may be used.

5.4.2 Sheet Piling Section (for Non-Flood Protection)

Design the steel sheet piling, using the moments and shears obtained from the geotechnical design for tip penetration, with allowable steel stresses, $F_b = 0.65\ F_y$ and $F_v = 0.40\ F_y$.

If archweb "U" piles are used, then the design shall account for and include calculations for shear transfer across their interlocks. Arch web piles or piles with interlocks at or near their center of gravity tend to slip under loading when the shear transfer cannot be achieved across their interlocks. Arch web piles shall be designed in accordance with the recommendations set forth in the standard CUR 166 published in 1993 in Holland by the Center for Execution, Investigations and Standardization in Civil Engineering (CUR), available from New Orleans District, Corps of Engineers, ED-T. Anti-slipping connections such as welding or crimping of the interlocks can be employed to help prevent displacement of the interlocks. The design calculations shall include all assumptions and shall consider the type(s) of soil, the effects of water, type of wall (i.e. cantilevered versus braced and shall include the location and number of wales, struts, etc), whether the piles are driven singly, in pairs, triple, etc., effects of phased excavation, treatment of the interlocks (i.e. how shear transfer is accomplished through welding or crimping), references cited, and any other considerations.

5.4.3 General Notes (for Non-Flood Protection)

Design steel struts, tie rods and steel wales using the maximum forces obtained from the unfactored geotechnical design and the latest AISC industry standards.

Design the anchors and deadmen, using the maximum anchor forces obtained from the factored geotechnical design and the latest AISC and ACI industry standards.

5.4.4 References

- "Steel Sheet Piling Design Manual", United States Steel Corporation
- "Steel Sheet Pile Design Manual", Pile Buck Inc.
- "Engineering Manual for Sheet Pile Walls", Virginia Tech Department of Civil Engineering
- "Design of Sheet Pile Walls", USACE Engineering Manual EM 1110-2-2504
- "CUR 166", published in 1993 in Holland by the Center for Execution, Investigations and Standardization in Civil Engineering (CUR) ('Dammwandconstructies' Civieltechnisch Centrum Uitvoering Research en Regelgeving, Holland

5.5 Reinforced Concrete Design Criteria

5.5.1 Structural Concrete

f_c' = 4000 psi minimum – 28 day strength (except concrete piles) or 90 days if pozzolans are used to replace cement. (3000 psi may be used for incidental structures or if heat control is required).

f_c' = 5000 psi minimum (prestressed concrete).

Thermal considerations: Slab and wall components that are greater than 4 feet thick shall require a thermal analysis. A simplified Level 1 analysis, as specified in ETL 1110-2-542 (dated 30 May 97), will suffice. A low-heat mix shall be included in the project specifications when analysis proves thermal stresses are elevated. A low-heat mix can be achieved by replacing the chirt aggregate with limestone; the larger the aggregate size the better. Additionally, replace the cement content with as much pozzalan as possible. Not all flyash and slags reduce heat. The most benefical are Class F flyash and Grade 120 ground granulated blast-furnace slag.

5.5.2 Steel Reinforcing

Steel reinforcing shall be ASTM A615 Gr. 60 with f_y = 60 ksi
(Designs utilizing f_y > 60 ksi are not allowed)

Steel reinforcing for prestress concrete shall be Grade 270 strands (270,000 psi).

5.5.3 Load Factors

Reinforced concrete hydraulic structures must follow Corps criteria (EM 1110-2-2104). EM 1110-2-2104 procedures are referenced to the load factors and strength reduction factors found in ACI 318-1999.

Single Load Factor of 1.7 for dead and live loads shall be used in addition to a Hydraulic Factor.

Hydraulic Factor of 1.3 shall be applied to both shear and moment. The hydraulic factor is used to improve crack control in hydraulic concrete structures by increasing reinforcement requirements, thus reducing steel stresses.

Hydraulic Factor of 1.65 shall be used for member in direct tension. This includes base slab sections which have a net tensile stress resulting from load and pile reactions.

Strength reduction factor for bending shall be 0.9

Strength reduction factor for shear shall be 0.85

In accordance with paragraph 3-3 of EM 1110-2-2104, the capacity needed to resist diagonal shear is as follows:

$$V_{uh} = V_u \cdot H_f = V_u \cdot 1.3$$

For Concrete Shear Strength only: $\Phi \cdot V_c \geq V_{uh}$

For Concrete with Stirrups: If $\Phi \cdot V_c \leq V_{uh}$ then $\Phi \cdot V_s \geq V_{uh} - 1.3 \cdot \Phi \cdot V_c$

This effectively reduces the stirrup reinforcement load factor in comparison to unreinforced concrete. This same method is used in ACI 350, paragraph 9.2.8.3. The reasoning is that the H_f is added for durability. Increasing the concrete section reduces the cracking thus minimizing rebar exposure to corrosion. Once the concrete is cracked, the stirrups are exposed thus the load factors revert back to those used in ACI 318, excluding the H_f. MVN typically does not include this reduction and will accept designs that provide shear reinforcement as:

$$\Phi \cdot V_s \geq V_{uh} - \Phi \cdot V_c$$

5.5.4 Steel Requirements

Maximum Flexural Reinforcement
- 0.25 p_b (Recommended)
- 0.375 p_b (Permitted w/o special studies)

Minimum Flexural Reinforcement
- ACI Code

Temperature Reinforcement
- $0.0028A_g$ (1/2 in each face)

5.5.5 Concrete Requirements

Clear Cover (except for channel lining) (Also see Section 12.0 – Typical Drawings):

- 2” min. for concrete sections equal to or less than 12” in thickness.
- 3” min. for concrete sections greater than 12” and less than 24” in thickness.
- 4” min. for concrete sections equal to or greater than 24” in thickness and when concrete is placed directly in contact with the ground.

Minimum Wall Thickness:

- T-walls = 18” minimum (for impact loads less than 50 kips)
- T-walls = 24” minimum (for impact loads 50 kips or greater)
- L-walls and I-walls = the width of the sheet piling plus 12”

Tapered walls are not recommended, but may be considered when the depth of the wall from top to bottom varies 18 inches or greater.

5.5.6 Lap Splices

See typical drawings and details in Section 12.0 for Lap Splice charts and notes.

Splices shall be staggered whenever possible. Otherwise, the ACI code shall be adhered to.

Mechanical Splices

1) Mechanical Connectors
2) Thermit Welding (Cadweld) (Only use when necessary)
3) Welding (Never to be used)

When using mechanical splicers, do not add the coupling device to a short bar (usually equal to the lap length) that in turn laps to a long length. This creates two lap splices at the same location. Lap splices should be held to a minimum.

5.5.7 Prestress Concrete

Prestress structural concrete (except piles) shall be approved in advance by the USACE engineer of record.

Prestress concrete piles are permitted in foundations resisting an unbalanced load provided the leading pile can resist 100% of the combined stresses, including those from the unbalanced load.

The piles combined axial and bending allowables for all unbalanced load cases are increased to $F_C = 0.45 \cdot F_C^{/}$ and $F_T = 3 \cdot \sqrt{F_C^{/}}$; For all other loading cases, the allowables are $F_C = 0.40 \cdot F_C^{/}$ and $F_T = 0$

5.5.8 General Notes

In a base slab where 3 or more pile rows are present, it is recommended that primary and secondary reinforcing steel be placed above piles when possible.

When primary steel is placed above embedded piles, temperature steel shall be placed in the depth of concrete below the primary steel (typically 12 inches). The temperature steel requirement is based on the depth of concrete below the primary steel, not the total depth of concrete.

5.6 Miscellaneous

5.6.1 Material Unit Weights

MATERIAL	UNIT WT (lb/ft^3)
Water	62.4
Concrete	150
Steel	490
Rip rap	132
Semi-Compacted Granular Fill	120
Fully-Compacted Granular Fill, Wet	120
Fully-Compacted Granular Fill, Effective	58
90% -Compacted Clay Fill, Wet	110
90% -Compacted Clay Fill, Effective	48

5.6.2 Loading Considerations

1) Concrete
- Unit weight of monolith
- Neglect weight of stabilization and tremie slab when beneficial to the foundation loading (i.e. uplift)

2) Water
- SWL Elev. (Hydrostatic pressure)
- Wave Loading (exclude the water weight due to the wave weight above the SWL when designing the foundation)
- For foundation designs, the resultant force and point of application shall be used for wave loadings.
- For wall designs, the pressure diagrams may be used for wave loadings.
- Due to the empirical nature of the formulas used, the force and point method may not produce the same resultant as the pressure diagrams, but this difference is usually negligible. The designer shall use engineering judgment when designing for wave loadings.

3) Soil
- Vertical - Use Unit Weight
- Horizontal - Use Unit Weight and K at rest values

  $K_o = 0.8$ for clay
  $K_o = 0.5$ for granular materials
  $K_o = 0.5$ for rip rap

4) Wind
- Use the latest version of ASCE 7 to determine max wind force
- 50 psf minimum

5) Uplift

- Impervious sheet pile cut-off, 100% effective
- Pervious sheet pile cut-off, slopes uniformly along base from flood side uplift at flood side edge of base to protected side uplift at protected side edge of base
- See Section "5.8 Examples of Uplift Cases."

5.6.3 Structural Steel Design

Minimum steel thickness = 5/16" (corrosion control)

Allowable stress = 5/6 of AISC allowable stress

The ASD method shall be used. The LRFD design method may **not** be used for structural steel design.

The American Welding Society, AWS D1.5 (2002) code shall be used for fracture critical members.

Welded structures should be welded all around (seal welded). Welds shall be designed and not simply made full penetration as the cost and residual stresses imparted by unequal cooling are detrimental. Weld inspection and NDT shall be made part of the contract requirements.

5.6.4 Steel Sheet Pile Design

$F_b = 0.5\ f_y$
$F_v = 0.33\ f_y$
F_a = 5/6 AISC allowable

Non-flood protection TRS allowables can be found in Section 5.4.2.

Thickness = 0.375 in. minimum

Only hot-rolled steel sheet piling sections are allowed.

5.6.5 Gate Design

5.6.5.1 Concrete Monolith

For the foundation design of most of the gate monoliths in our flood protection system, a rule of thumb for the pile layout is to use battered piles to resist the horizontal loads at the columns and use vertical piles to resist vehicular and railway loads in the center of the monolith. Engineering judgment shall be used to determine the zone of influence to resist the horizontal loads in respect to battered pile placement. Where unbalanced loads are present in the foundation

design, battered piles may also be required in the center. Low unbalanced loads may also be transferred to the end walls where battered piles are concentrated.

5.6.5.2 Steel Gates

Gates 12 feet tall or less may utilize a two girder system. The gates are considered low head and need not comply with Fracture Critical Requirements. Girder splices are not recommended, but when approved the splice shall be NDT tested along 100% of the length. Stress levels and deflections shall limit the girder capacity. Stress levels shall be kept below 0.5 Fy and stresses about both axis maintained below 75% of unity.

Gates taller than 12 ft. to 16 ft. tall may also utilize a two girder system, but must meet all fracture critical criteria for a hydraulic steel structure. Fracture critical requirements are specified in ER 1110-2-8157. Non-redundant tension members shall comply with AWS D1.5 and 100% of welded tension connections shall be NDT tested, including all plates and stiffeners welded to the tension flange of both girders. Splices to the critical horizontal girders are prohibited.

Gates taller than 16 ft. shall utilize at least three girders. At the hinge column, the third girder shall transfer the load to the column through an additional hinge. For welded connections, AWS D1.1 is adequate. Splices to the critical horizontal girders are prohibited.

Roller Type Gates. Consideration should be given to the design of the gate in respect to rolling the gate into placement. New gates may be very large and will pose concerns when the gate is moved into position. Roller gates shall be used when the clearance requirements within the closure swing cannot be guaranteed.

Swing Type Gates. The use of three hinges or extension of columns and tension supports should be considered for gates that are very large in height. The top hinge tends to bind when moving gates that are very heavy. Adjustable bottom seals shall be added where slight variations in sill height could occur (i.e. road pavement topping improvements).

Overhead Roller Type Gates. The use of this type of gate shall be of last resort. If there are no problems with swing tolerances, then we recommend using a swing gate.

Miter Type Gates. The latching of the gates after placed into the closed position is very critical for the proper function of the miter gate. A latching system should be investigated if miter gates are being considered. The latch shall resist all applicable design hurricane protection design cases.

5.6.6 General Design Considerations

Where levees will be raised or new embankment constructed, the adverse effects of foundation consolidation must be considered which includes drag forces on both the sheet pile cut-off and support piles. In addition, these drag forces must be considered in settlement calculations.

Where non-displacement piles are required and corrosion is not a controlling factor, consider H-piles or pipe piles; otherwise, investigate the use of prestressed concrete piles which are typically more cost effective.

5.6.7 Utility Crossings

For a structural alternative on utility crossings, the utility shall only be allowed to pass through a pile founded L-Wall or T-Wall. Utilities should pass through a properly sealed pipe sleeve in the cut-off sheet piling. See Section 12.0 for typical examples and utility clearances.

On case-by-case bases, utilities may pass through the concrete wall and in general, should not be attached. Only metal (steel or iron) sleeves and carrier pipes shall be permitted to penetrate the wall; no plastic or PVC. Shut off valves are required on all gravity flow pipelines and shall be placed on the protected side. See Section 12.0 for typical examples and utility clearances.

All Utility Crossings shall approved by the USACE engineer of record. See Section 3.6 for other utility crossing options.

5.6.8 Painting

Only coal tar epoxy shall be used.

Steel sheet, H and Pipe pilings that will be installed in new fill, disturbed materials or fluctuating water tables shall be painted with a coal tar epoxy system. The H-piles and sheet piling shall be painted 3 inches above the stabilization slab and to a 5 ft. minimum below new fill material, disturbed soil or the lowest elevation of fluctuating water tables. Piles exposed in water (i.e. cutoff pilings in breakwaters) shall be coated the full height exposed to water plus a 5’ embedment length. Use engineering judgment for final painting requirements.

5.6.9 Levee Tie-ins, Transitions and Scour Protection

Typical scour protection details can be found in Appendix C.

ERDC Overtopping Protection can be found in Appendix D. It shall be used to determine whether the minimums set in Appendix C are adequate.

Proper engineering judgment and settlement considerations shall be used to determine the proper level of scour protection. Scour protection materials and details should be properly engineered and suitable for the specific site location. Scour protection on the flood side should be considered on a case-by-case basis, especially if hurricane wave loading exists.

95% compaction of the scour protection sub-base shall be considered to minimize settlement. The structural backfill shall be fully compacted, fertilized and seeded where concrete armor is not applied.

Scour protection is required on the protected side of all I-walls and L-Walls. Scour protection is also required on the protected side of T-walls that include a stability berm. Scour protection shall transition a minimum of 10' into any adjacent T-wall sections then curve inward at a radius equal to that of the protection width.

Proper earthen cover and scour protection are mandatory. Future settlement should be accounted for in detailing scour protection over the sheeting piling.

Typical MVN details should be used for transitions from L-Wall or T-wall to T-wall, L-Wall or T-wall to I-wall and L-Wall or T-wall to uncapped sheet piling (slip joint). See Section 12.0 for typical drawings.

The tie-in details for T-Walls, L-Walls and I-walls that terminate into a levee section must follow the latest guidance. As a minimum, the uncapped cut-off sheet piling must extend horizontally 30 feet into the full levee section. Tip penetration in the transition zone shall continue at the full depth of the adjacent sheetpile unless a reduction in depth is supported by a seepage analysis showing that the transition would not be flanked.

A minimum hot rolled PZ-22 shall be used at all levee tie-ins.

5.7 General Load Case Tables

Following are general load case tables. It is important to note that these tables are not inclusive of all possible scenarios.

Table 5.1 General Load Cases

LC No.	Overstress Allowed		Load Case Name	Description
	Fdn.	Wall		
LC 1a	16⅔ %	16⅔ %	Construction	Dead load 200 psf equipment surcharge No uplift No wind
LC 1b	33⅓ %	33⅓ %	Construction plus Wind	Dead load No unbalanced load No uplift Wind from protected side
LC 2a	0	0	Water to SWL (impervious)	Dead load Unbalanced load (if present) Impervious sheet pile cut-off No wind[2] No boat/barge impact
LC 2b	0	0	Water to SWL (pervious)	Dead load Unbalanced load (if present) Pervious sheet pile cut-off No wind[2] No boat/barge impact
LC 2c	33⅓%	50%	Water to SWL plus Barge Impact (impervious)	Dead load Unbalanced load (if present) Impervious sheet pile cut-off No wind See “Boat/Barge Impact Loading Tables & Maps”
LC 2d	33⅓%	50%	Water to SWL plus Barge Impact (pervious)	Dead load Unbalanced load (if present) Pervious sheet pile cut-off No wind See “Boat/Barge Impact Loading Tables & Maps”
LC 3a	33⅓%	33⅓%	Water to SWL plus Wave Load (impervious)	Dead load Unbalanced load (if present) Impervious sheet pile cut-off No wind Wave load applied
LC 3b	33⅓%	33⅓%	Water at SWL plus Wave Load (pervious)	Dead load Unbalanced load (if present) Impervious sheet pile cut-off No wind Wave load applied

LC No.	Overstress Allowed		Load Case Name	Description
	Fdn.	Wall		
LC 4a[1]	50%	67%	Water to SWL plus Wave Load plus Barge Impact (impervious)	Dead load Unbalanced load (if present) Impervious sheet pile cut-off No wind Wave load applied See "Boat/Barge Impact Loading Tables & Maps"
LC 4b[1]	50%	67%	Water to SWL plus Wave Load plus Barge Impact (pervious)	Dead load Unbalanced load (if present) Pervious sheet pile cut-off No wind Wave load applied See "Boat/Barge Impact Loading Tables & Maps"
LC 5a[1]	0	0	Water to Reverse Head plus Wind (impervious)	Dead load Unbalanced load (if present) Impervious sheet pile cut-off No boat/barge impact Wave load applied
LC 5b[1]	0	0	Water to Reverse Head plus Wind (pervious)	Dead load Unbalanced load (if present) Pervious sheet pile cut-off No boat/barge impact Wave load applied
DC A	33⅓%	33⅓%	Water to Top of Wall (pervious or impervious)	Dead load No unbalanced load Pervious or impervious sheet pile cut-off No wave load No wind load No boat/barge impact load
DC B	50%	50%	Water to Top of Wall (pervious or impervious)	Dead load With unbalanced load Pervious or impervious sheet pile cut-off No wave load No wind load No boat/barge impact load

LC No.	Overstress Allowed		Load Case Name	Description
	Fdn.	Wall		
DC C[1]	67%	67%	Water to Top of Wall plus Barge Impact (impervious)	Dead load Unbalanced load (if present) Impervious sheet pile cut-off No wave load No wind load See “Boat/Barge Impact Loading Tables & Maps”
DC D[1]	67%	67%	Water to Top of Wall plus Barge Impact (pervious)	Dead load Unbalanced load (if present) Pervious sheet pile cut-off No wave load No wind load See “Boat/Barge Impact Loading Tables & Maps”

NOTES:
1. If applicable; i.e. not all structures will be subject to barge impact.
2. If wind is applied, a 33⅓% overstress is allowed for SWL cases.
3. Boat impact shall be assumed to be concentrically placed when designing the monolith foundation. Eccentric impacts shall be checked

5.8 Examples of Uplift Cases

Following are examples of uplift cases.

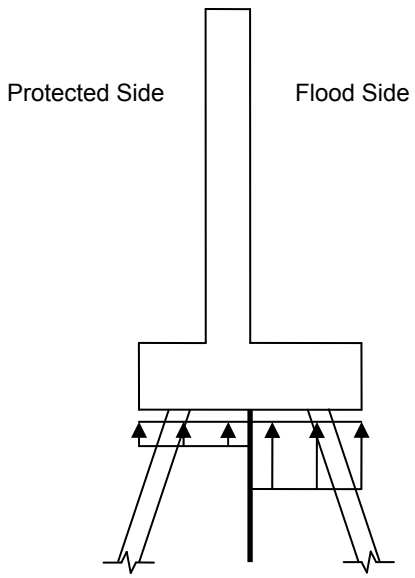

Figure 5.4 Impervious Sheet Pile

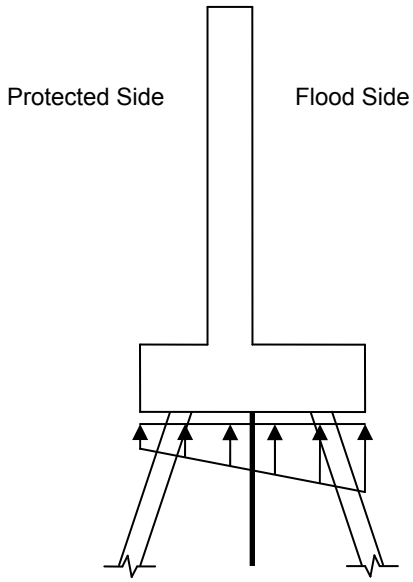

Figure 5.5 Pervious Sheet Pile

5.9 Boat/Barge Impact Loading Tables & Maps

Impact loads for boats and barges shall be considered as shown in the following tables and Figures 5.6 through 5.9 at a minimum.

The maps show the minimum impact load to be applied to wall designs along the various reaches. If the impact loads expected are higher than shown, research into the appropriate impact loading for the each design should be performed.

Table 5.2

HURRICANE PROTECTION - BASIC LOAD CASE COMBINATIONS								
LOAD CASE	% ALLOWABLE OVERSTRESS		PILE LOAD - FACTORS OF SAFETY (FOR Q-CASE)					
	WALLS & GATES	FOUNDATION	STATIC LOAD TEST		PDA LOAD TEST		NO LOAD TEST	
			C	T	C	T	C	T
I. CONSTRUCTION	16⅔	16⅔	1.70	1.70	2.15	2.60	2.60	2.60
II. CONSTRUCTION + WIND	33⅓	33⅓	1.50	1.50	1.90	2.25	2.25	2.25
III. STILL WATER LEVEL (SWL)	0	0	2.00	2.00	2.50	3.00	3.00	3.00
IV. SWL + WIND	33⅓	33⅓	1.50	1.50	1.90	2.25	2.25	2.25
V. SWL + WAVE	33⅓	33⅓	1.50	1.50	1.90	2.25	2.25	2.25
VI. SWL + ** BOAT IMPACT (BI)	50	33⅓	1.50	1.50	1.90	2.25	2.25	2.25
VII. SWL + WAVE + **BI	67	50	1.33	1.33	1.67	2.00	2.00	2.00
VIII. SWL + UNBALANCED LOAD	0	0	2.00	2.00	2.50	3.00	3.00	3.00
IX. REVERSE HEAD	0	0	2.00	2.00	2.50	3.00	3.00	3.00

HURRICANE PROTECTION - DESIGN CHECKS								
LOAD CASE	% ALLOWABLE OVERSTRESS		PILE LOAD - FACTORS OF SAFETY (FOR Q-CASE)					
	WALLS & GATES	FOUNDATION	STATIC LOAD TEST		PDA LOAD TEST		NO LOAD TEST	
			C	T	C	T	C	T
I. WATER TO TOP OF WALL, NO UNBALANCED LOAD + NO WAVE LOAD	33⅓	33⅓	1.50	1.50	1.90	2.25	2.25	2.25
II. WATER TO TOP OF WALL, UNBALANCED LOAD + NO WAVE LOAD	50	50	1.33	1.33	1.67	2.00	2.00	2.00
III. WATER TO TOP OF WALL, W/ OR W/O UNBALANCED LOAD + ** BOAT IMPACT (BI)	67	67	1.20	1.20	1.50	1.80	1.80	1.80

*** GENERAL NOTES:**

1. If unbalanced load is present for the SWL load case, it shall be included in all SWL load case combinations.
2. Actual unfactored service loads shall be used in any pile analysis program.
3. An increase in allowable deflections will be allowed for overstress conditions. Sound engineering judgment shall be utilized in deciding the appropriate overstress. Deviation from deflections and overstress guidance shall be approved by the USACE engineer of record.

**** NOTES ON IMPACT:**

1. For SWL cases, apply impact at 3-ft above SWL. For water to top of wall, apply impact at top of wall.
2. Designs shall assume a 100 kip load where barge impact can occur now or in the future; Use a 50 kip load for other vessels, such as pleasure craft or work boats. A minimum boat impact load of 0.5 kips/ft shall be applied as required. Current

obstructions that are marginal and have a high probability of not lasting the project life shall be assumed non-existent.

3. Wall load distribution. Boat/Barge impact loads shall be distributed over a 5 foot width plus the width gained along a 45-degree angle. Minimum boat impact loads shall be applied across the entire wall length.

4. Foundation load distribution. Boat/Barge and minimum impact loads shall be distributed over the full width of the monolith foundation at the appropriate elevation. As a design check, the boat/barge impact loadings shall be applied 5 feet from the edge of the monolith with a Factor of Safety of 1.0 (no overstress) and submitted to the USACE engineer of record for review.

5. Gate load distribution. Boat/Barge impact loads shall be distributed over a 5 foot width on the upper girder. No load is assumed on the lower girder(s). Minimum boat impact loads shall be applied across the entire upper girder length.