AMENDMENT OF SOLICITATION/MODIFICATION OF CONTRACT

1. CONTRACT ID CODE	PAGE OF PAGES	
J	1	2

2. AMENDMENT/MODIFICATION NO.	3. EFFECTIVE DATE	4. REQUISITION/PURCHASE REQ. NO.	5. PROJECT NO.(If applicable)
0002	15-Jul-2006		ED-06-073

6. ISSUED BY CODE W912P8

USACE, CONTRACTING DIVISION
ATTN: CEMVN-CT, ROOM 172
7400 LEAKE AVE.
NEW ORLEANS LA 70118-3651

7. ADMINISTERED BY (If other than item 6) CODE

See Item 6

8. NAME AND ADDRESS OF CONTRACTOR (No., Street, County, State and Zip Code)

CODE FACILITY CODE

X	9A. AMENDMENT OF SOLICITATION NO. W912P8-06-R-0167
X	9B. DATED (SEE ITEM 11) 13-Jul-2006
	10A. MOD. OF CONTRACT/ORDER NO.
	10B. DATED (SEE ITEM 13)

11. THIS ITEM ONLY APPLIES TO AMENDMENTS OF SOLICITATIONS

[X] The above numbered solicitation is amended as set forth in Item 14. The hour and date specified for receipt of Offer [ ] is extended, [X] is not extended.

Offer must acknowledge receipt of this amendment prior to the hour and date specified in the solicitation or as amended by one of the following methods: (a) By completing Items 8 and 15, and returning _____ copies of the amendment; (b) By acknowledging receipt of this amendment on each copy of the offer submitted; or (c) By separate letter or telegram which includes a reference to the solicitation and amendment numbers. FAILURE OF YOUR ACKNOWLEDGMENT TO BE RECEIVED AT THE PLACE DESIGNATED FOR THE RECEIPT OF OFFERS PRIOR TO THE HOUR AND DATE SPECIFIED MAY RESULT IN REJECTION OF YOUR OFFER. If by virtue of this amendment you desire to change an offer already submitted, such change may be made by telegram or letter, provided each telegram or letter makes reference to the solicitation and this amendment, and is received prior to the opening hour and date specified.

12. ACCOUNTING AND APPROPRIATION DATA (If required)

13. THIS ITEM APPLIES ONLY TO MODIFICATIONS OF CONTRACTS/ORDERS.
IT MODIFIES THE CONTRACT/ORDER NO. AS DESCRIBED IN ITEM 14.

[ ] A. THIS CHANGE ORDER IS ISSUED PURSUANT TO: (Specify authority) THE CHANGES SET FORTH IN ITEM 14 ARE MADE IN THE CONTRACT ORDER NO. IN ITEM 10A.

[ ] B. THE ABOVE NUMBERED CONTRACT/ORDER IS MODIFIED TO REFLECT THE ADMINISTRATIVE CHANGES (such as changes in paying office, appropriation date, etc.) SET FORTH IN ITEM 14, PURSUANT TO THE AUTHORITY OF FAR 43.103(B).

[ ] C. THIS SUPPLEMENTAL AGREEMENT IS ENTERED INTO PURSUANT TO AUTHORITY OF:

[ ] D. OTHER (Specify type of modification and authority)

E. IMPORTANT: Contractor [ ] is not, [ ] is required to sign this document and return _____ copies to the issuing office.

14. DESCRIPTION OF AMENDMENT/MODIFICATION (Organized by UCF section headings, including solicitation/contract subject matter where feasible.)

This amendment to the above numbered solicitation is to delete the drawings in amendment No. One and add the 35 drawings included in amendment No. Two.
See Attached.

Except as provided herein, all terms and conditions of the document referenced in Item 9A or 10A, as heretofore changed, remains unchanged and in full force and effect.

15A. NAME AND TITLE OF SIGNER (Type or print)		16A. NAME AND TITLE OF CONTRACTING OFFICER (Type or print) TEL: EMAIL:	
15B. CONTRACTOR/OFFEROR _____ (Signature of person authorized to sign)	15C. DATE SIGNED	16B. UNITED STATES OF AMERICA BY _____ (Signature of Contracting Officer)	16C. DATE SIGNED 15-Jul-2006

SECTION SF 30 BLOCK 14 CONTINUATION PAGE

SUMMARY OF CHANGES

(End of Summary of Changes)

PLANS FOR

INNER HARBOR NAVIGATION CANAL

ORLEANS PARISH, LA.

ELECTRICAL DISTRIBUTION

INNER HARBOR NAVIGATION CANAL LOCK

U. S. ARMY
CORPS OF ENGINEERS
NEW ORLEANS DISTRICT
2005

This drawing has been reduced to half size

FOR CONSTRUCTION
FEB.17, 2006

AIMS GROUP, Inc.
Consulting Engineers
4421 Zenith Street, Metairie, LA 70001
(504) 887-7045

0001, PL 84-99
W912P8-06-B-0034

Safety is a Part of Your Contract

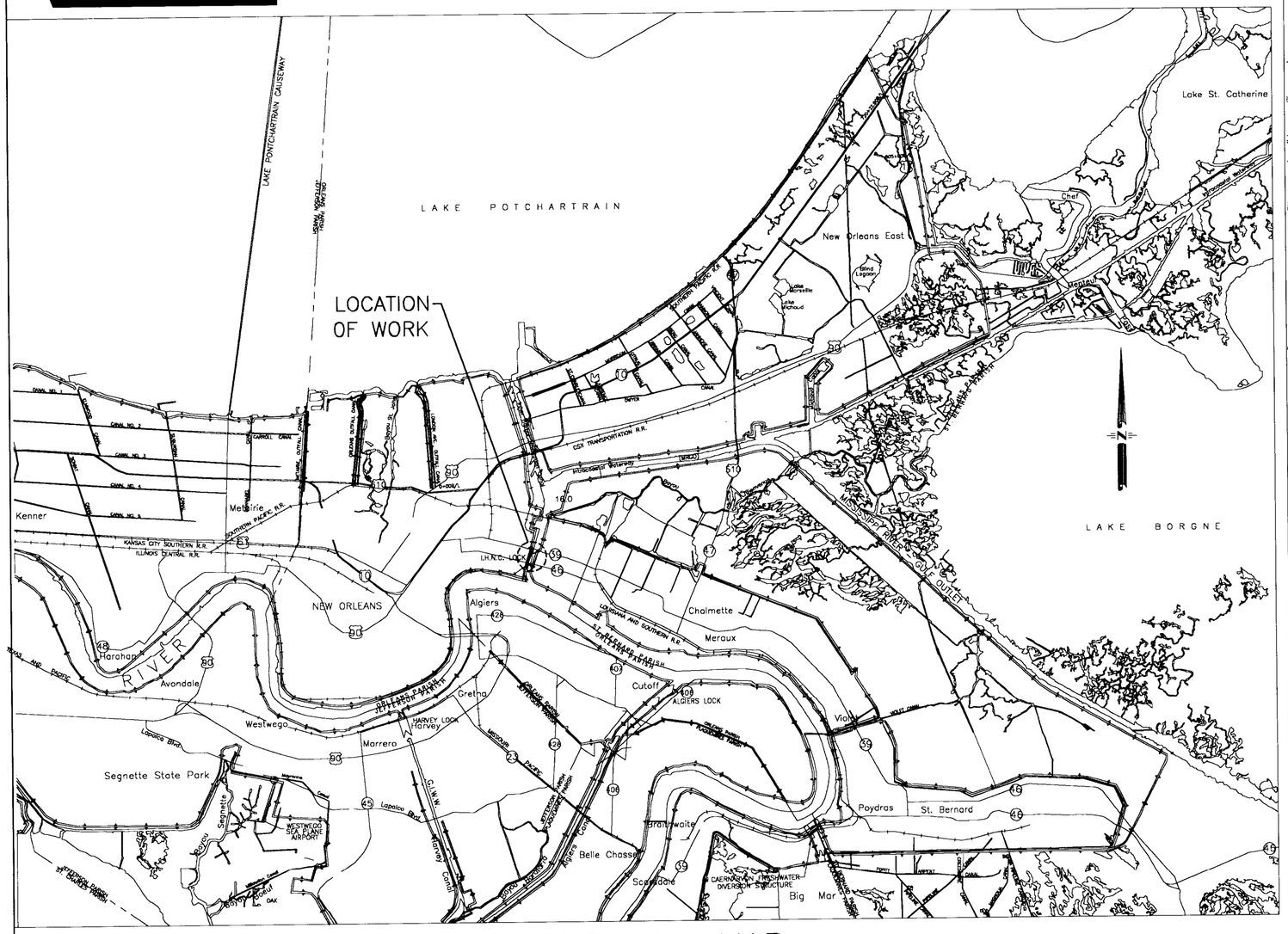

LOCATION MAP

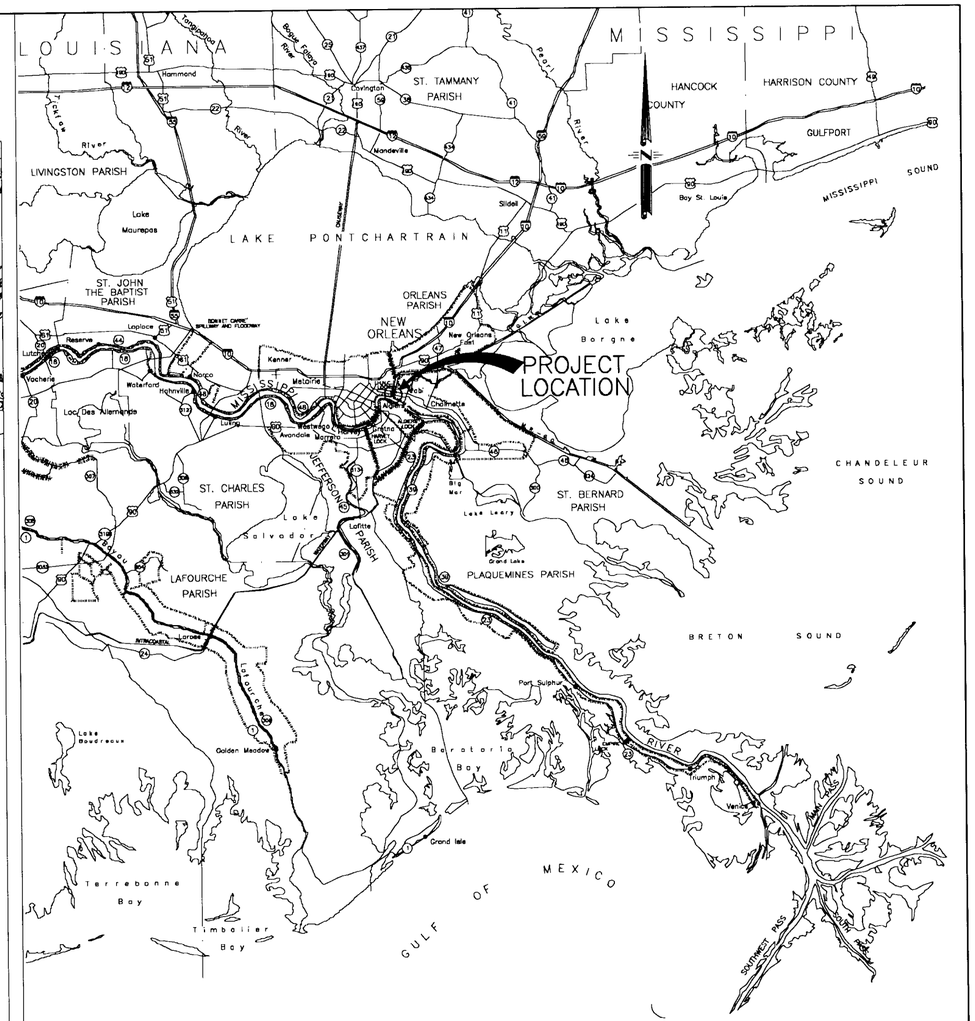

VICINITY MAP

SCALE IN MILES

10 0 10 20 30 40 50

BENCH MARK DESCRIPTION

NAME	DESCRIPTION	ELEV.
1	SHOWN ON DWG. S1	-2'-0"

This drawing has been reduced to half size

FOR CONSTRUCTION
FEB.17, 2006

VALUE INCENTIVE CLAIMS ENGINEERING — YOUR KEY TO HIGHER PROFITS

AIMS GROUP, Inc.
Consulting Engineers
4421 Zenith Street, Metairie, LA 70001
(504) 887-7045

C-A-D

INDEX TO DRAWINGS

DWG.	TITLE
1	COVER SHEET
2	VICINITY MAP, LOCATION MAP AND INDEX TO DRAWINGS
	ELECTRICAL DRAWINGS
E1	ELECTRICAL SYMBOL LEGEND, GENERAL NOTES & FIXTURE SCHEDULE
E2	ELECTRICAL DETAILS
E3	ELECTRICAL SITE PLAN
E4	MACHINERY ROOM SPECIFIC NOTES
E5	WEST LAKE-END MACHINERY ROOM LIGHTING PLAN
E6	WEST LAKE-END MACHINERY ROOM POWER PLAN
E7	EAST LAKE-END MACHINERY ROOM LIGHTING PLAN
E8	EAST LAKE-END MACHINERY ROOM POWER PLAN
E9	WEST RIVER-END MACHINERY ROOM LIGHTING/POWER PLAN
E10	EAST RIVER-END MACHINERY ROOM LIGHTING/POWER PLAN
E11	GALLERY LIGHTING/POWER PLAN
E12	GALLERY LIGHTING/POWER PLAN
E13	GALLERY LIGHTING/POWER PLAN
E14	EXISTING MACHINERY ROOM BRANCH CIRCUITS
E15	ORIGINAL MITRE GATE MOTOR CONTROL DIAGRAM (GATES 1,4,5)
E16	ORIGINAL MITRE GATE MOTOR CONTROL DIAGRAM (GATES 2, 3, 6)
E17	ORIGINAL MITRE GATE MOTOR CONTROL DIAGRAM (GATES 7,10)
E18	ORIGINAL MITRE GATE MOTOR CONTROL DIAGRAM (GATES 8,9)
E19	ORIGINAL SLUICE VALVE MOTOR CONTROL DIAGRAM
E20	EXISTING HYDRAULIC VALVE AND MITRE GATE MOTOR CONTROL DIAGRAMS
E21	SITE ELECTRICAL "AS-BUILT" MAIN ELECTRICAL ONE-LINE DIAGRAM
E22	EXISTING ELECTRICAL SYSTEM ONE-LINE
E23	REVISED ELECTRICAL SYSTEM ONE-LINE
E24	ELECTRICAL PANEL SCHEDULE-WEST LAKE-END
E25	ELECTRICAL PANEL SCHEDULES-EAST LAKE-END
E26	ELECTRICAL PANEL SCHEDULES-WEST RIVER-END AND GALLERY
E27	ELECTRICAL PANEL SCHEDULES-EAST RIVER-END AND GALLERY
E28	ELECTRICAL SPECIFICATION NOTES
	CIVIL DRAWINGS
C1	GENERATOR SLAB - LOCATION PLAN
S1	GENERATOR SLAB & DETAILS
S2	GENERATOR STEEL SUPPORT DETAILS
	MECHANICAL DRAWINGS
M1	VALVE 16 AND VALVE 18 DETAILS
M2	SUMP PUMP DETAILS

MARK	DESCRIPTION	DATE

INNER HARBOR NAVIGATION CANAL
ORLEANS PARISH, LA.

IHNC
ELECTRICAL DISTRIBUTION SYSTEM
INNER HARBOR NAVIGATION CANAL LOCK

VICINITY MAP, LOCATION MAP AND INDEX TO DRAWINGS

U. S. ARMY ENGINEER DISTRICT, NEW ORLEANS
CORPS OF ENGINEERS
NEW ORLEANS, LOUISIANA

DESIGNED BY: E.A.B. CHECKED BY: T.R.L. DRAWN BY: S.J.B. DATE: FEB. 2006	PLOT SCALE: 1:2	PLOT DATE: 2-17-06	FILE NAME: IHNC INDEX(2) SOLICITATION NO. W912P8-06-B-0034	FILE NO. 2 DWG. 2 OF 35

Safety is a Part of Your Contract

SYMBOL SCHEDULE – ELECTRICAL AND DIVISION 16 DOCUMENTS

SYMBOL CEILING	SYMBOL WALL	DESCRIPTION
		FLUORESCENT LIGHT FIXTURE. LETTER DENOTES FIXTURE TYPE. SEE FIXTURE SCHEDULE.
		FLUORESCENT LIGHT FIXTURE ON EMERGENCY CIRCUIT
		HID OR INCANDESCENT LIGHT FIXTURE. SEE FIXTURE SCHEDULE.
		"EXIT" LIGHT FIXTURE(WITH OR WITHOUT DIRECTIONAL ARROWS) EXIT LIGHTS ON EMERGENCY CIRCUITS ARE NOT SHADED.
		EMERGENCY BATTERY PACK FIXTURE.
	S	SINGLE-POLE TOGGLE SWITCH.
	Sa	SINGLE POLE TOGGLE SWITCH. LETTER DENOTES FIXTURE CONTROLLED.
	S_2	TWO-POLE TOGGLE SWITCH.
	S_3	THREE-WAY TOGGLE SWITCH.
	S_4	FOUR-WAY TOGGLE SWITCH.
		PUSHBUTTON STATION
		SPECIAL OUTLET: SEE PLAN FOR TYPE
		CLOCK OUTLET WALL MOUNTED
		SIMPLEX CONVENIENCE OUTLET,20 AMPERE.125 VOLT, NEMA 5-20R.
		DUPLEX OUTLET, 20 AMP, 125V., NEMA 5-20R, U.N.O.
	W.P.	DUPLEX OUTLET WITH WEATHER-PROOF COVER.
	GFI	GROUND FAULT CIRCUIT INTERRUPTER DUPLEX OUTLET.
		QUADRAPLEX (2-15A., 125-VOLT, NEMA 5-15R MOUNTED IN ONE BOX.)
		GROUND CONNECTION.
		BRANCH CIRCUIT PANELBOARD.
		DISTRIBUTION PANELBOARD.
		DISCONNECT SWITCH. FUSED UNLESS OTHERWISE NOTED.
		MAGNETIC MOTOR STARTER. (SUPPLIED UNDER DIVISION 15000)
		COMBINATION STARTER/DISCONNECT SWITCH.FUSED UNLESS OTHERWISE NOTED.
WH		ELECTRIC WATER HEATER.
		PULLBOX OR TROUGH
		MOTOR, SINGLE-PHASE, NUMERAL DENOTES HORSEPOWER.
		MOTOR, THREE PHASE. NUMERAL DENOTES HORSEPOWER.
ATS		AUTOMATIC TRANSFER SWITCH.
H	H	HANDHOLE.
		CIRCUIT BREAKER DEVICE
		SWITCH DEVICE.

SYMBOL CEILING	SYMBOL WALL	DESCRIPTION
		FUSE.
		NORMALLY OPEN CONTACT.
		NORMALLY CLOSED CONTACT
M		MANHOLE.
J		JUNCTION BOX
E		SPECIAL CIRCUIT (E= EMERGENCY, T= TELEPHONE, T.V.= TELEVISION, EX= EXISTING, ETC.
		WIRING (IN CONDUIT) CONCEALED IN OR UNDER SLAB
		WIRING (IN CONDUIT) CONCEALED IN CEILING OR WALL
		WIRING (IN CONDUIT) RUN EXPOSED
		EXISTING
		EXISTING TO BE REMOVED
		WIRING (IN CONDUIT) RUN UNDER GROUND
		EXTEND EXISTING CONDUIT WITH NEW CONDUIT
		CIRCUIT TURNED UP
		CIRCUIT TURNED DOWN
A		AMP
V		VOLT
W		WIRE
P		POLE
C		CONDUIT
GD		GROUND
C/B		CIRCUIT BREAKER
AC		AIR CONDITION
AFF		ABOVE FINISHED FLOOR
WH		WATER HEATER
GFI		GROUND FAULT INTERRUPTER
		NOTE REFERENCE
L:1,2		HOMERUN TO PANELBOARD WITH NOMENCLATURE (LETTERS), CIRCUIT NUMBERS (NUMBERS), NUMBER OF PHASE AND NEUTRAL CONDUCTORS WHEN MORE THAN TWO (HASH MARKS), OPPOSITE SLANT DENOTES GROUND,NUMBER OF CIRCUITS (NUMBER OF ARROWS).
X Z Y		DETAIL REFERENCE : "X" DENOTES DETAIL NUMBER "Y" DENOTES SHEET DETAIL IS REFERENCED FROM "Z" DENOTES SHEET DETAIL IS DRAWN ON
1 E-1		DETAIL: NUMBER DENOTES DETAIL NUMBER LETTER "E" DENOTES SHEET ON WHICH DETAIL IS DRAWN
1		FLOOR PLAN OR DRAWING OTHER THAN DETAIL.

LIGHT FIXTURE SCHEDULE:

F1 MARINE RATED, 4-FOOT, SURFACE-MOUNTED LINEAR FLUORESCENT; WET LOCATION LISTED; CORROSION-FREE, HIGH-IMPACT, GLASS REINFORCED, UV STABILIZED NYLON HOUSING; HIGH-IMPACT, POLYCARBONATE DIFFUSER; STAINLESS STEEL LATCHES; SILICONE GASKETING; HEAVY-DUTY, STAINLESS STEEL MOUNTING FEET; 3/4-INCH NPT, THREADED CONDUIT HUBS ON EACH END; ELECTRONIC, LOW TEMPERATURE BALLAST WITH LESS THAN 10% THD; (2) 32-WATT T8 LAMPS; 120-VOLT.

PHOENIX LFSB SERIES OR APPROVED EQUAL

F2 ARCHITECTURAL AREA HID "HARBOR-STYLE" FIXTURE; IP66 RATED; WET LOCATION LISTED; POLE-MOUNTED AS INDICATED ON DRAWINGS VIA "SINGLE TOP SHEPARD'S CROOK ARM"; DIE-CAST, LOW COPPER GRADE ALUMINUM ARM, HOUSING AND LENS FRAME; STAINLESS STEEL FASTENERS AND HINGES; FLAT, TEMPERED GLASS LENS; SILICONE GASKETING; STAINLESS STEEL MOUNTING BOLTS; SEGMENTED, ROTATABLE OPTICAL ASSEMBLY; TYPE III DISTRIBUTION; LOW TEMPERATURE, HIGH POWER FACTOR BALLAST; 240-VOLT; COLOR SHALL BE PLATINUM SILVER.

KIM "ERA" RA25 SERIES OR APPROVED EQUAL.

F3 ENCLOSED, GASKETED, MARINE GRADE PIT LIGHT; LISTED FOR USE IN WET, CORROSIVE ENVIRONMENTS; SURFACE, WALL MOUNT; COPPER-FREE ALUMINUM HOUSING; IMPACT-RESISTANT GLASS GLOBE; 1-INCH NPT CONNECTION; 175-WATT PULSE START METAL HALIDE LAMP; LOW TEMP (MINUS 20-DEGREE F) BALLAST; 120-VOLT.

HUBBELL KEMLUX III KS SERIES

POLE SCHEDULE:

P1 30-FOOT, STEPPED, LOW COPPER GRADE ALUMINUM POLE SPECIFICALLY DESIGNED FOR "SHEPARD'S CROOK ARM"; 0.4-INCH WALL THICKNESS; MINIMUM EPA RATING OF 3.0 FOR 150 MPH WIND ZONE; FINISH TO MATCH FIXTURE; STANDARD BASE COVER.

KIM CSL SERIES OR APPROVED EQUAL.

ELECTRICAL DRAWING INDEX

SHEET	DESCRIPTION
E1	ELECTRICAL SYMBOL LEGEND, GENERAL NOTES, & FIXTURE SCHEDULE
E2	ELECTRICAL DETAILS
E3	ELECTRICAL SITE PLAN
E4	MACHINERY ROOM SPECIFIC NOTES
E5	WEST LAKE-END MACHINERY ROOM LIGHTING PLAN
E6	WEST LAKE-END MACHINERY ROOM POWER PLAN
E7	EAST LAKE-END MACHINERY ROOM LIGHTING PLAN
E8	EAST LAKE-END MACHINERY ROOM POWER PLAN
E9	WEST RIVER-END MACHINERY ROOM LIGHTING/POWER PLAN
E10	EAST RIVER-END MACHINERY ROOM LIGHTING/POWER PLAN
E11	GALLERY LIGHTING/POWER PLAN
E12	GALLERY LIGHTING/POWER PLAN
E13	GALLERY LIGHTING/POWER PLAN
E14	EXISTING MACHINERY ROOM BRANCH CIRCUITS
E15	ORIGINAL MITRE GATE MOTOR CONTROL DIAGRAM (GATES 1, 4, 5)
E16	ORIGINAL MITRE GATE MOTOR CONTROL DIAGRAM (GATES 2, 3, 6)
E17	ORIGINAL MITRE GATE MOTOR CONTROL DIAGRAM (GATES 7, 10)
E18	ORIGINAL MITRE GATE MOTOR CONTROL DIAGRAM (GATES 8, 9)
E19	ORIGINAL SLUICE VALVE MOTOR CONTROL DIAGRAM
E20	EXISTING HYDRAULIC VALVE AND MITRE GATE MOTOR CONTROL DIAGRAMS
E21	SITE ELECTRICAL "AS-BUILT" MAIN ELECTRICAL ONE-LINE DIAGRAM
E22	EXISTING ELECTRICAL SYSTEM ONE-LINE
E23	REVISED ELECTRICAL SYSTEM ONE-LINE
E24	ELECTRICAL PANEL SCHEDULES - WEST LAKE-END
E25	ELECTRICAL PANEL SCHEDULES - EAST LAKE-END
E26	ELECTRICAL PANEL SCHEDULES - WEST RIVER-END AND GALLERY
E27	ELECTRICAL PANEL SCHEDULES - EAST RIVER-END AND GALLERY
E28	ELECTRICAL SPECIFICATIONS NOTES

GENERAL NOTES:

1. ALL ELECTRICAL WORK SHALL COMPLY WITH THE NATIONAL ELECTRICAL CODE – NFPA 70-2002.
2. ALL EQUIPMENT INDICATED SHALL BE FOR USE INDOORS (NEMA 1); UNLESS NOTED OTHERWISE.
3. ALL FUSED DISCONNECT SWITCHES SERVING EQUIPMENT SUPPLIED UNDER OTHER DIVISIONS OF THE WORK SHALL BE PROVIDED WITH FUSES AS RECOMMENDED BY THE EQUIPMENT MANUFACTURER; UNLESS NOTED OTHERWISE.
4. SEPARATE GREEN GROUND CONDUCTORS ARE REQUIRED FOR ALL RECEPTACLE AND FEEDER CIRCUITS; SEE SPECIFICATIONS.
5. CONTRACTOR SHALL UTILIZE ARCHITECTURAL REFLECTED CEILING PLANS FOR EXACT LOCATIONS OF LIGHTING FIXTURES AND MECHANICAL PLANS FOR EXACT LOCATIONS OF ALL MECHANICAL EQUIPMENT.
6. SEE ARCHITECTURAL DRAWINGS FOR AREAS BEING DEMOLISHED.
7. FIRESTOP MATERIALS (U.L.LISTED) ARE REQUIRED AT ALL PENETRATIONS THROUGH RATED FLOORS, WALLS, CEILING AND PARTITIONS.
8. CONDUCTORS SHALL BE COLOR CODED PER N.E.C. UTILIZE ONLY THE COLORS SPECIFIED AND IDENTIFY ALL CONDUCTORS AND BOXES.
9. WRITTEN SPECIFICATIONS DESCRIBING MATERIALS AND METHODS SHALL BE UTILIZED THROUGHOUT THE CONSTRUCTION OF THE PROJECT.
10. ALL NEW 20-AMP, 120-VOLT RECEPTACLES INSTALLED IN MACHINERY ROOMS SHALL BE WEATHERPROOF, GFI-TYPE.
11. SCHEDULE AND SEQUENCE ALL ELECTRICAL WORK SUCH THAT THE MAXIMUM AMOUNT OF TIME THAT ANY PORTION OF THE LOCK IS WITHOUT POWER IS 8-HOURS.
12. INFORMATION REGARDING THE EXISTING POWER DISTRIBUTION SYSTEM WAS COMPILED FROM AS-BUILT DRAWINGS AND SITE VISITS. BECAUSE MUCH OF THE DISTRIBUTION SYSTEM IS CONCEALED IN CONCRETE OR UNDERGROUND, IT IS POSSIBLE THAT SOME CIRCUITS MAY NOT HAVE BEEN IDENTIFIED OR MAY HAVE CHANGED FROM WHAT IS SHOWN IN THESE DOCUMENTS. NOTIFY THE ENGINEER IMMEDIATELY OF ANY DISCREPANCIES FOUND BETWEEN THESE DRAWINGS AND THE ACTUAL CONDITIONS IN THE FIELD.
13. SEE ONE-LINE DIAGRAM FOR CONDUIT AND CONDUCTOR SIZING INFORMATION.
14. SEE SPECIFICATIONS FOR CONDUIT AND CABLE REQUIREMENTS.
15. ALL NEW MACHINERY ROOM BRANCH AND FEEDER CIRCUITS SHALL BE ROUTED OVERHEAD IN SURFACE CONDUITS. EXISTING FLOOR TROUGHS / DUCTS SHALL NOT BE UTILIZED FOR ANY NEW CIRCUIT WIRING.
16. ROUTE OVERHEAD CONDUITS ALONG WALLS AND AWAY FROM PATHS OF NORMAL EGRESS AS BEST AS POSSIBLE. WHERE OVERHEAD CONDUITS CROSS EGRESS PATHS, BOTTOM OF CONDUIT SHALL NOT EXTEND BELOW 6'-8" PER CODE.
17. DO NOT REMOVE ANY EXISTING WIRING OR EQUIPMENT UNTIL THE NEW CIRCUITS AND EQUIPMENT ARE INSTALLED AND TESTED.
18. ALL NEW TRANSFORMERS (INCLUDING THOSE IN MINI POWER CENTERS) SHALL BE NON-VENTILATED, 316 STAINLESS STEEL, COPPER WOUND, 115-DEGREE C TEMP RISE, AND PROVIDED WITH ELECTROSTATIC SHIELDING.
19. WHERE NEW TERMINATIONS OR SPLICES ARE MADE, THEY SHALL BE WATER-PROOF: USE 3M SCOTCH 2229 SERIES MASTIC WITH VINYL TAPE COVERING OR EQUAL.
20. ALL CONDUIT CONNECTIONS TO BOXES AND ENCLOSURES SHALL BE WATER-TIGHT.
21. VISIT SITE TO INSPECT EXISTING CONTROLLERS AND REFERENCE EXISTING CONTROL DIAGRAMS TO DETERMINE NEW CONTROLLER REQUIREMENTS (RELAYS, CONTACTORS, OVERLOADS, SWITCHES, STARTERS, ETC.). LABEL ALL EXISTING CONTROL WIRES AND COMPONENTS, AND CREATE AN "AS BUILT / EXISTING" CONTROL DIAGRAM OF EACH CONTROLLER PRIOR TO DISCONNECTING ANY CONDUCTORS.

This drawing has been reduced to half size

VALUE INCENTIVE CLAUSES ENGINEERING "YOUR KEY TO HIGHER PROFITS"

@2006 IMC 1404A CONSULTING ENGINEERS INC. 3120 20th STREET METAIRIE, LOUISIANA 70002

US Army Corps of Engineers New Orleans District

MARK	DESCRIPTION	DATE	APPR.	MARK	DESCRIPTION	DATE	APPR.

U. S. ARMY ENGINEER DISTRICT, NEW ORLEANS
CORPS OF ENGINEERS
NEW ORLEANS, LOUISIANA

DESIGNED BY: PSV
CHECKED BY: KMCL
DRAWN BY: KLH
DATE: 02-17-06

PLOT SCALE: 1=2
PLOT DATE: 02-17-06
DESIGN FILE NAME: J:/1404A/ELEC/E1
SUBMITTED BY: PAUL VLOSICH – DESIGN ENGINEER
SOLICITATION NO. W912P8-06-B-0034

INNER HARBOR NAVIGATION CANAL
ORLEANS PARISH, LA.
IHNC ELECTRICAL
ELEC. SYMBOL LEGEND, GEN. NOTES & FIXTURE SCHED.

FILE NUMBER E1

DWG. 3 OF 35

Safety is a Part of Your Contract

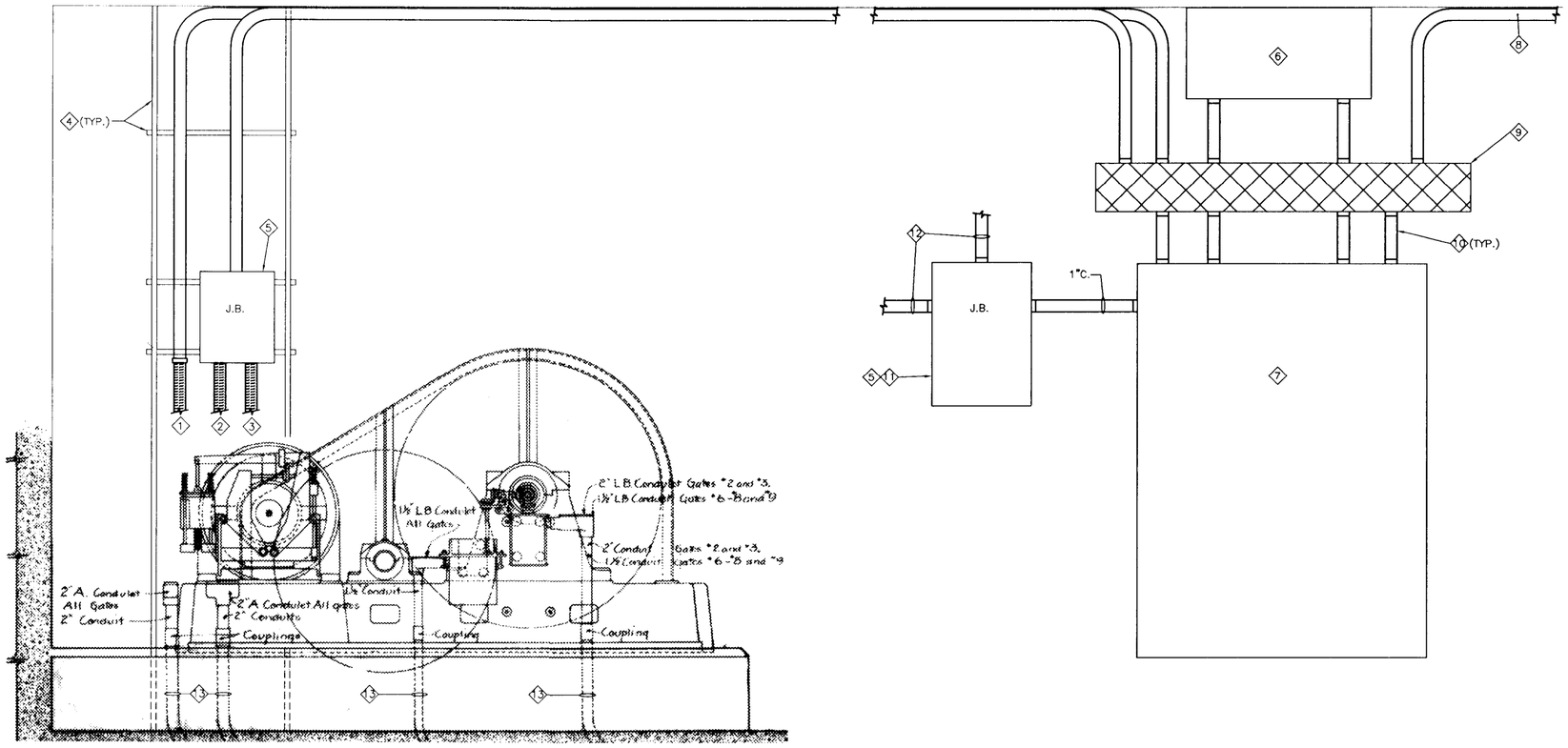

1 TYPICAL WOUND ROTOR MOTOR/CONTROLLER CONDUIT CONNECTION DETAIL
SCALE: NONE

SPECIFIC NOTES: (WOUND ROTOR)

1. LFMC TO MOTOR SECONDARY WINDINGS.
2. LFMC TO MOTOR PRIMARY WINDINGS.
3. LFMC TO BRAKE SOLENOID.
4. UNISTRUT SUPORTED BY FLOOR, CEILING, AND EXISTING CONCRETE PAD.
5. WEATHER-PROOF J-BOX.
6. NEW RESISTOR BANK.
7. NEW WOUND ROTOR MOTOR CONTROLLER.
8. FROM DISTRIBUTION PANEL.
9. NEW WIRE TROUGH.
10. SEAL ALL CONDUIT CONNECTIONS TO BOXES & TROUGHS.
11. JUNCTION BOX FOR CONTROL DEVICES, TERMINALS, AND FOR RECONNECTING EXISTING CONTROL INPUTS. PROVIDE TERMINAL STRIPS IN J-BOX.
12. CONDUITS AS NECESSARY TO TIE INTO EXISTING CONTROL INPUTS.
13. ABANDON EXISTING CONDUITS.

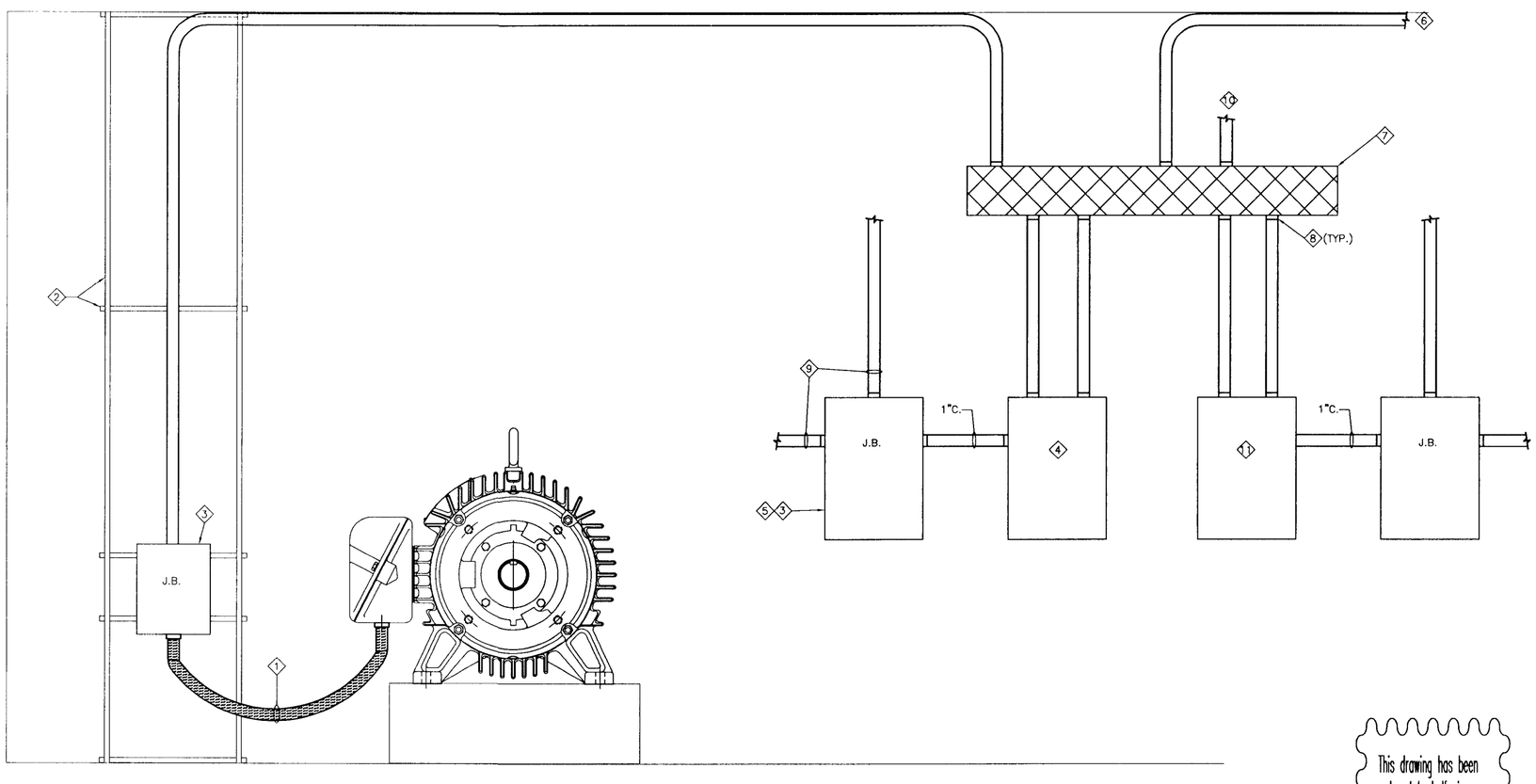

2 TYPICAL MOTOR/CONTROLLER CONDUIT CONNECTION DETAIL
SCALE: NONE

SPECIFIC NOTES: (MOTOR CONTROLLER)

1. LFMC TO MOTOR.
2. PROVIDE UNISTRUT ONLY AS REQUIRED FOR CONDUIT AND BOX SUPPORT.
3. WEATHERPROOF JUNCTION BOX.
4. NEW COMBINATION STARTER.
5. JUNCTION BOX FOR RECONNECTING EXISTING/ CONNECTING TO NEW CONTROL INPUTS. PROVIDE TERMINAL STRIPS IN J-BOX.
6. FROM DISTRIBUTION PANEL.
7. NEW WIRE TROUGH.
8. SEAL ALL CONDUIT CONNECTIONS TO BOXES & TROUGHS.
9. CONDUITS AS NECESSARY FOR CONTROL DEVICES, TERMINALS, AND FOR RECONNECTING CONTROL INPUTS.
10. TO SECOND MOTOR AS APPLICABLE.
11. NEW COMBINATION STARTER AS APPLICABLE. (NOT ALL MOTORS ARE GROUPED – SEE ONE-LINE).

This drawing has been reduced to half size

VALUE INCENTIVE CLAUSES ENGINEERING YOUR KEY TO HIGHER PROFITS

© 2006 IMC 1404A
CONSULTING ENGINEERS
INC.
3120 20th STREET
METAIRIE, LOUISIANA 70002

US Army Corps of Engineers
New Orleans District

MARK	DESCRIPTION	DATE	APPR.	MARK	DESCRIPTION	DATE	APPR.

U. S. ARMY ENGINEER DISTRICT, NEW ORLEANS
CORPS OF ENGINEERS
NEW ORLEANS, LOUISIANA

DESIGNED BY: PSV
CHECKED BY: KMCL
DRAWN BY: KLH
DATE: 02-17-06
PLOT SCALE: 1=2
PLOT DATE: 02-17-06
DESIGN FILE NAME: J:/1404A/ELEC/E2
SUBMITTED BY: PAUL VLOSICH
DESIGN ENGINEER
SOLICITATION NO. W912P8-06-B-0034

INNER HARBOR NAVIGATION CANAL
ORLEANS PARISH, LA.
IHNC
ELECTRICAL DETAILS

FILE NUMBER
E2
DWG. 4 OF 35

Safety is a Part of Your Contract

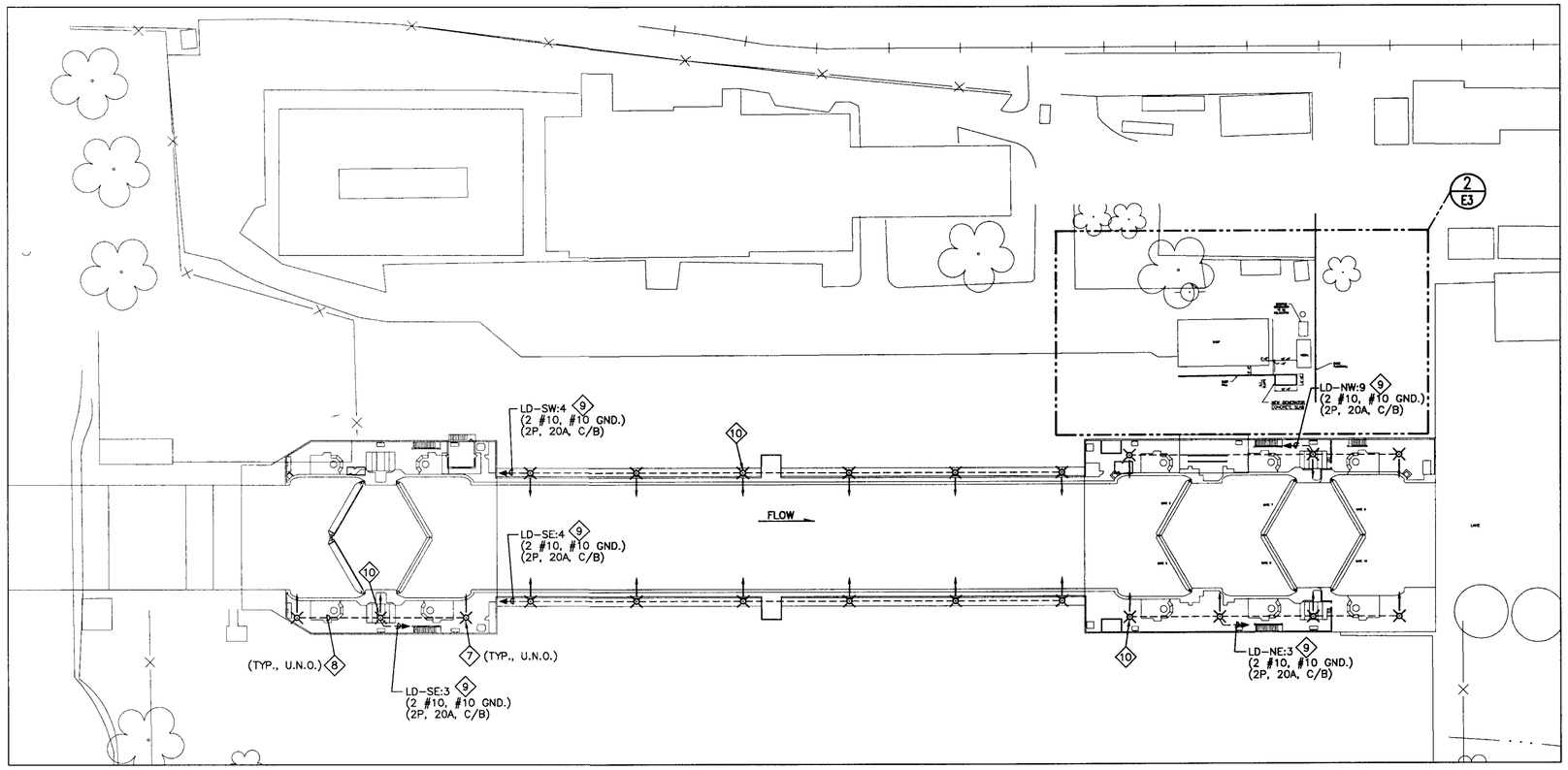

1 ELECTRICAL SITE PLAN

SCALE: 1" = 40'

40' 0 40' 80' 120' 160'

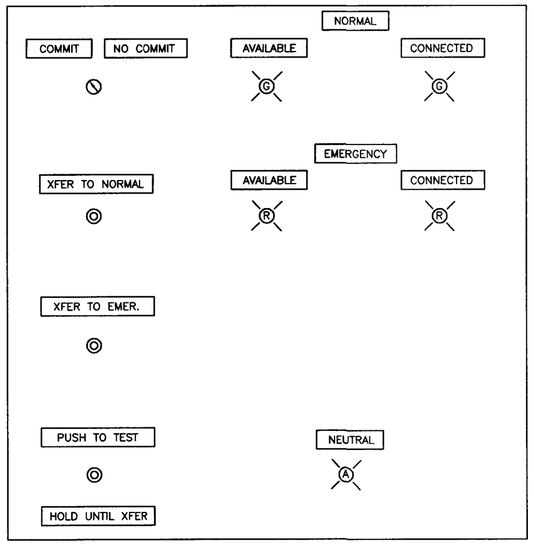

3 DUPLICATE ATS CONTROL PANEL

SCALE: NONE

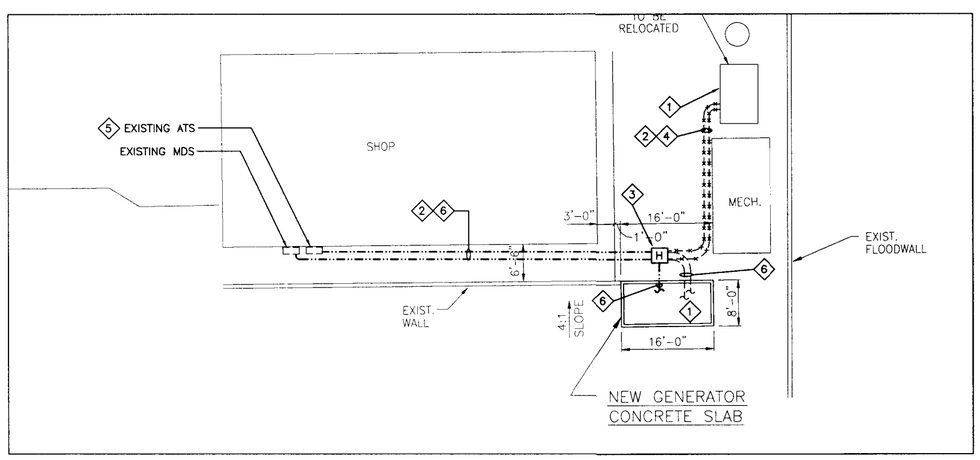

2 ELECTRICAL SITE PLAN - ENLARGED PLAN

SCALE: 1" = 10'

10' 0 10' 20' 30' 40'

SPECIFIC NOTES (SITE PLAN):

1. RELOCATE GENERATOR TO NEW PLATFORM AS SHOWN HERE AND ON ARCHITECTURAL / STRUCTURAL DRAWINGS. FURNISH ALL NECESSARY FUEL PUMPS AND / OR CONTROLS NECESSARY TO RETROFIT THE EXISTING GENERATOR SET TO THE NEW FUEL TANK TO BE FURNISHED BY THE GENERAL CONTRACTOR.
2. APPROXIMATE LOCATION OF EXISTING UNDERGROUND CONDUITS AND CONDUCTORS FROM THE GENERATOR TO THE ATS. EXCAVATE TO EXPOSE EXISTING CONDUITS. PROVIDE NEW POWER AND CONTROL CABLES BETWEEN THE NEW GENERATOR LOCATION AND THE RAISED ATS AS INDICATED HEREIN.
3. PROVIDE NEW 30"W X 48"L X 18"D QUAZITE TYPE PG DIVIDED HANDHOLE WITH OPEN BOTTOM FOR EXTENDING EXISTING CONDUITS TO NEW GENERATOR SET LOCATION. FURNISH HANDHOLE WITH SPLIT / OVERLAPPING, TIER 15 COVER WITH THE LOGOS "POWER" AND "CONTROLS" ENGRAVED IN THE TWO SIDES, RESPECTIVELY.
4. REMOVE EXISTING CABLES. ABANDON EXISTING CONDUITS.
5. RAISE EXISTING 600-AMP ATS ON SIDE OF SHOP BUILDING BY 18-INCHES. EXTEND EXISTING CONDUIT STUB-UPS. RECONNECT ATS TO MAIN DISCONNECT SWITCH. SEAL ABANDONED CONDUIT HOLES WITH A GASKETED COVER TO MAINTAIN THE 3R RATING OF THE SWITCH. DUPLICATE, AND TIE INTO, EXISTING PUSHBUTTON CONTROLS ON DOOR OF ATS VIA A SEPARATE 12" X 12" NEMA 4X ENCLOSURE MOUNTED ADJACENT TO THE ATS. SEE DUPLICATE CONTROL PANEL DETAIL THIS SHEET. ALL CONDUIT CONNECTIONS SHALL BE WATER-TIGHT.
6. PROVIDE NEW POWER AND CONTROL CONDUITS AND CABLES BETWEEN THE RAISED ATS AND THE RELOCATED GENERATOR SET. ALL CONNECTIONS SHALL BE WATER-TIGHT.
7. FIXTURE F2 ON POLE P1. ARROW INDICATES AIMING. SEE FIXTURE SCHEDULE. FURNISH POLE FOR INSTALLATION BY THE GENERAL CONTRACTOR. SEE STRUCTURAL DRAWINGS.
8. PULL NEW CONDUCTORS IN EXISTING CONDUITS.
9. ROUTE THROUGH ASSOCIATED LIGHTING CONTACTOR PANEL. SEE LIGHTING CONTROL DETAIL ON SHEET E21.
10. RE-MOUNT EXISTING SPEAKER TO NEW POLE. EXTEND WIRING FROM POLE BASE AS NECESSARY.

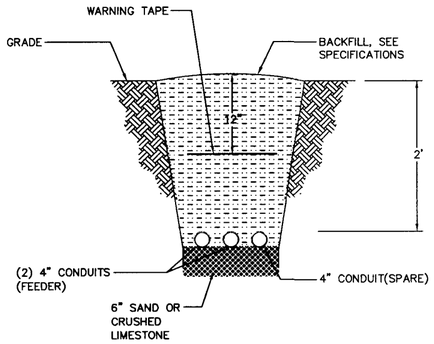

4 SECTION THROUGH DUCT BANK ELECTRICAL POWER FEEDER

SCALE: NONE

VALUE ENGINEERING — YOUR KEY TO HIGHER PROFITS

This drawing has been reduced to half size

© 2006 IMC 1404A CONSULTING ENGINEERS INC. 3120 20th STREET METAIRIE, LOUISIANA 70002

US Army Corps of Engineers New Orleans District

MARK	DESCRIPTION	DATE	APPR.	MARK	DESCRIPTION	DATE	APPR.

U. S. ARMY ENGINEER DISTRICT, NEW ORLEANS
CORPS OF ENGINEERS
NEW ORLEANS, LOUISIANA

DESIGNED BY: PSV | PLOT SCALE: 1=2 | PLOT DATE: 02-17-06 | DESIGN FILE NAME: J:/1404A/ELEC/E3
CHECKED BY: KMCL | SUBMITTED BY: PAUL VLOSICH | SOLICITATION NO.: N91278-06-B-0034
DRAWN BY: KLH | DESIGN ENGINEER: - | -
DATE: 02-17-06

INNER HARBOR NAVIGATION CANAL
ORLEANS PARISH, LA.
IHNC SITE
ELECTRICAL SITE PLAN

FILE NUMBER E3

DWG. 5 OF 35

Safety is a Part of Your Contract

GENERAL NOTES (MACHINERY ROOM POWER AND LIGHTING PLANS):

1. WHERE "XX" IS USED IN A NOTE, XX REFERS TO "NW", "NE", "SW", OR "SE", DEPENDING ON THE MACHINERY ROOM IN WHICH THE NOTE APPEARS.
   "NW" = NORTHWEST, OR WEST, LAKE-END
   "SW" = SOUTHWEST, OR WEST, RIVER-END
   "NE" = NORTHEAST, OR EAST, LAKE-END
   "SE" = SOUTHEAST, OR EAST, RIVER-END

2. THE REVISED ONE-LINE REFERENCED IN THESE NOTES CAN BE FOUND ON SHEET E23.

SPECIFIC NOTES (MACHINERY ROOM POWER AND LIGHTING PLANS):

(1) EXISTING MANHOLE ALLOWING ACCESS TO CONDUITS IN THE SLAB. UTILIZE MANHOLES TO REMOVE EXISTING CONDUCTORS AS INDICATED AND ONLY AFTER THE ASSOCIATED NEW CONDUCTORS HAVE BEEN INSTALLED AND TESTED.

(2) MOUNT NEW, WP, GFI RECEPTACLE ADJACENT TO OR ABOVE EXISTING, CONCRETE-RECESSED RECEPTACLE. MINIMUM MOUNTING HEIGHT SHALL BE 48-INCHES ABOVE THE MACHINERY ROOM FLOOR. NO RECEPTACLE SHALL BE MOUNTED MORE THAN 72-INCHES ABOVE THE MACHINERY ROOM FLOOR. CONNECT TO NEW LIGHTING PANEL NOTED VIA SEALED, SURFACE CONDUIT. COORDINATE MOUNTING HEIGHTS WITH THE OWNER.

(3) NUMBERS IN PARENTHESIS INDICATE THE LIGHTING PANEL NUMBER AND CIRCUIT NUMBER, RESPECTIVELY. FOR EXAMPLE, (2:3) WOULD BE CIRCUIT 3 ON PANEL LL-2.

(4) EXISTING JUNCTION BOX CONNECTING POWER FROM THE EXTERIOR MANHOLES (SEE EXISTING SITE MAIN ELECTRICAL FEEDER ONE-LINE) TO THE EXISTING BUS BARS. PROVIDE CONDUIT AND CONDUCTORS FROM EXISTING JUNCTION BOX TO NEW ECB AND PANEL HD-XX. REMOVE EXISTING CONDUIT AND CONDUCTORS FROM THE EXISTING JUNCTION BOX TO THE EXISTING BUS BARS ONCE HD-XX IS INSTALLED AND TESTED AND ALL LOADS ON THE EXISTING BUS BARS HAVE BEEN TRANSFERRED. PROVIDE GASKETED SEAL ON EXISTING JUNCTION BOX WHERE CONDUIT IS REMOVED, OR LEAVE UP TO 12-INCHES OF THE EXISTING CONDUIT AND CAP OFF AT THE END.

(5) EXISTING EXPOSED BUS BARS TO BE REMOVED ONCE NEW DISTRIBUTION PANEL HD-XX IS INSTALLED AND ALL EXISTING LOADS ARE TRANSFERRED TO IT. REMOVE EXISTING GATE UNDER STAIR IF NECESSARY TO MAINTAIN WORKING CLEARANCE IN FRONT OF HD-XX.

(6) EXISTING WOUND ROTOR INDUCTION MOTOR MANUFACTURED BY GE, CIRCA 1919, TO REMAIN. MOTOR OPERATES MITRE GATE. THE FOLLOWING WAS TAKEN FROM THE MOTOR NAMEPLATE:

TYPE: ITC 5013 12 52 600; HP: 52; VOLTS: 440; AMPS: 76; PHASE: 3; CYCLES: 60; SECONDARY AMPS: 120; SPEED AT FULL LOAD: 570; DESIGN D; FORM: M

(7) REPLACE EXISTING WOUND ROTOR MOTOR CONTROLLER WITH NEW, CUSTOM FABRICATED, COMBINATION (CIRCUIT BREAKER TYPE) DISCONNECT SWITCH / MOTOR CONTROLLER PER THE BELOW.

DISCONNECTING MEANS SHALL BE LOCATED ON THE EXTERIOR OF THE CONTROL ENCLOSURE.

PROVIDE A SEPARATE 2-POLE, 20-AMP, 240-VOLT TOGGLE SWITCH INSIDE OF THE ENCLOSURE TO DISCONNECT CONTROL POWER. CONTROL POWER SHALL BE PROVIDED FROM A SEPARATE POWER SOURCE OR SHALL BE PROVIDED VIA A CONTROL TRANSFORMER CONNECTED UPSTREAM OF THE MOTOR DISCONNECT SWITCH (SO THAT CONTROLS CAN BE TESTED WHILE POWER IS DISCONNECTED FROM THE MOTOR).

FURNISH CONTROLLER / DISCONNECT WITH STAINLESS STEEL, NEMA 4X ENCLOSURE. PROVIDE SPACE HEATER AND HUMIDISTAT, WITH ASSOCIATED RELAYS AS NECESSARY, INSIDE OF THE ENCLOSURE TO PREVENT CONDENSATION. SET HUMIDISTAT CONTROLS TO 80% RH, NON-CONDENSING. MAXIMUM ENCLOSURE DIMENSIONS SHALL BE 48-INCHES WIDE BY 60-INCHES HIGH.

PROVIDE THE FOLLOWING OPERATOR INTERFACES ON THE COVER OF THE ENCLOSURE:

1. "HAND-OFF-AUTO" SWITCH: HEAVY DUTY, 30mm, CORROSION-RESISTANT, 3-POSITION SELECTOR SWITCH WITH ROTARY KNOB. IN THE AUTO POSITION, GATE SHALL OPERATE VIA EXISTING, EXTERNAL CONTROL INPUTS. IN THE HAND POSITION, THE "OPEN-OFF-CLOSE" SWITCH SHALL OVERRIDE EXTERNAL CONTROL INPUTS AND CONTROL GATE OPERATION.
2. "OPEN-OFF-CLOSE" SWITCH: HEAVY DUTY, 30mm, CORROSION-RESISTANT, 3-POSITION SELECTOR SWITCH WITH ROTARY KNOB. WHEN THE "HAND-OFF-AUTO" SWITCH IS IN THE HAND POSITION, THE "OPEN-OFF-CLOSE" SWITCH CONTROLS THE OPERATION OF THE MOTOR. LIMIT SWITCHES, OVERLOADS, INTERLOCKS AND SAFETIES SHALL NOT BE BYPASSED BY THE "OPEN-OFF-CLOSE" SWITCH.
3. GATE CLOSED LAMP: LED OR LONG-LIFE INCANDESCENT LAMP WITH SERIES-CONNECTED RESISTOR; AMBER LENS; ON WHENEVER CLOSED LIMIT SWITCH INDICATES THAT THE GATE IS CLOSED.
4. GATE OPEN LAMP: LED OR LONG-LIFE INCANDESCENT LAMP WITH SERIES-CONNECTED RESISTOR; AMBER LENS; ON WHENEVER OPEN LIMIT SWITCH INDICATES THAT THE GATE IS OPEN.
5. MOTOR OVERLOAD LAMP: LED OR LONG-LIFE INCANDESCENT LAMP WITH SERIES-CONNECTED RESISTOR; RED LENS; ON WHENEVER POWER IS REMOVED FROM THE MOTOR BECAUSE OF AN OVERLOAD CONDITION.
6. GATE SELECTOR SWITCH: FOR GATES 7 AND 8 CONTROLLERS ONLY, PROVIDE A 2-POSITION, 30mm, CORROSION-RESISTANT SELECTOR SWITCH WITH ROTARY KNOB. FOR GATE 7, THE SWITCH SHALL SELECT BETWEEN GATES 5 AND 7. FOR GATE 8, THE SWITCH SHALL SELECT BETWEEN GATES 6 AND 8. THE SELECTOR SWITCH SHALL LOCKOUT THE "UNSELECTED" GATE, INCLUDING IN THE MANUAL MODES OF OPERATION.

REPLACE THE EXISTING RESISTOR BANKS CONNECTED TO THE MOTOR SECONDARY WITH NEW STAINLESS STEEL RESISTORS OF EQUAL POWER AND IMPEDANCE RATING. VERIFY RATINGS WITH ACTUAL MEASUREMENTS IN THE FIELD. RETURN THE EXISTING CAST IRON RESISTOR BANKS TO THE OWNER. LABEL THE RESISTOR BANKS WITH A TAG IDENTIFYING WHICH MOTOR IT WAS ORIGINALLY CONNECTED TO.

PROVIDE SHOP DRAWINGS FOR THE CONTROLLER AND ENCLOSURE. AT A MINIMUM, SHOP DRAWINGS SHALL CONTAIN THE FOLLOWING INFORMATION:

1. TO-SCALE INTERIOR COMPONENT LAYOUT DRAWING ILLUSTRATING ENCLOSURE DIMENSIONS WITH IDENTIFICATION OF (AND PLACEMENT OF) INTERIOR COMPONENTS.
2. TO-SCALE ELEVATION VIEW OF THE FRONT COVER ILLUSTRATING LAYOUT OF OPERATOR INTERFACES.
3. MOTOR CONTROL WIRING DIAGRAM INDICATING CONNECTIONS TO COMPONENTS INSIDE AND REMOTE FROM THE ENCLOSURE, INCLUDING ALL LIMIT SWITCHES, REMOTE OPERATOR CONTROLS, ETC. IDENTIFY ALL VOLTAGES, TERMINALS, WIRE SIZES, COLOR AND/OR NUMBERING IDENTIFICATION SCHEMES, COMPONENT LOCATIONS, ETC.

VALUE INCENTIVE CLAUSES ENGINEERING — YOUR KEY TO HIGHER PROFITS

PROVIDE NEW CONDUIT AND CONDUCTORS TO THE CONTROLLER AS INDICATED ON THE ONE-LINE. IDENTIFY AND RECONNECT EXISTING CONTROL INPUTS.

REPLACE NON-FUNCTIONAL GATE MOTOR CONTROLLERS FIRST (GATES 3, 4, 5, 6, 9, AND 10). ONCE NON-FUNCTIONAL CONTROLLERS ARE REPLACED AND TESTED (AND THE LOCK CAN BE OPERATED WITH THE NEW CONTROLLERS), REPLACE THE EXISTING, FUNCTIONAL MOTOR CONTROLLERS (GATES 1, 2, 7, AND 8).

(8) REMOVE EXISTING CONDUCTORS TO MOTOR PRIMARY AND SECONDARY WINDINGS AND TO SOLENOID BRAKE. ROUTE NEW CONDUIT AND CONDUCTORS OVERHEAD FROM THE NEW MOTOR CONTROLLER TO THE EXISTING MOTOR. POWER FOR THE SOLENOID BRAKE SHALL COME FROM THE MOTOR'S PRIMARY WINDING FEEDER. SEE TYPICAL WOUND ROTOR MOTOR / CONTROLLER CONDUIT CONNECTION DETAIL. MAKE FINAL TERMINATIONS TO MOTOR AND BRAKE WITH LFMC (LESS THAN 6-FEET).

(9) EXISTING HYDRAULIC GATE VALVE MOTOR MANUFACTURED BY BALDOR TO REMAIN. THE FOLLOWING WAS TAKEN FROM THE MOTOR NAMEPLATE:

MODEL # CM2333T; 15HP; 480-VOLTS; 3-PHASE; 60-HZ; 19.2-AMPS; 1760 RPM; 254TC FRAME; 1.15 SERVICE FACTOR; CODE H; DESIGN B; CLASS F; 91% EFF.; 0.8 POWER FACTOR; CONTINUOUS RATED AT 40-DEGREES C AMBIENT; TEFC

(10) REMOVE EXISTING MOTOR CONTROLLER FOR VALVE MOTOR. REPLACE CONTROLLER WITH NEW COMBINATION (CIRCUIT BREAKER TYPE) DISCONNECT / MOTOR CONTROLLER. CONTROLLER SHALL BE 3-POLE, 480-VOLT, WITH CIRCUIT BREAKER, FVNR STARTER AND SOLID STATE OVERLOAD RELAYS INSIDE OF A NEMA 4X STAINLESS STEEL ENCLOSURE. DISCONNECTING MEANS SHALL BE LOCATED ON THE EXTERIOR OF THE CONTROL ENCLOSURE.

MONITOR, AND SHUT MOTOR DOWN UPON, THE FOLLOWING CONDITIONS: MOTOR OVERLOAD, PHASE LOSS, PHASE REVERSAL, PHASE UNBALANCE, GROUND FAULT.

PROVIDE THE FOLLOWING OPERATOR INTERFACES ON THE COVER OF THE ENCLOSURE:

1. "HAND-OFF-AUTO" SWITCH: HEAVY DUTY, 30mm, CORROSION-RESISTANT, 3-POSITION SELECTOR SWITCH WITH ROTARY KNOB. IN THE AUTO POSITION, VALVE SHALL OPERATE VIA EXISTING, EXTERNAL CONTROL INPUTS. IN THE HAND POSITION, THE "OPEN-OFF-CLOSE" SWITCH SHALL OVERRIDE EXTERNAL CONTROL INPUTS AND CONTROL VALVE OPERATION.
2. "OPEN-OFF-CLOSE" SWITCH: HEAVY DUTY, 30mm, CORROSION-RESISTANT, 3-POSITION SELECTOR SWITCH WITH ROTARY KNOB. WHEN THE "HAND-OFF-AUTO" SWITCH IS IN THE HAND POSITION, THE "OPEN-OFF-CLOSE" SWITCH CONTROLS THE OPERATION OF THE MOTOR. LIMIT SWITCHES, OVERLOADS, INTERLOCKS AND SAFETIES SHALL NOT BE BYPASSED BY THE "OPEN-OFF-CLOSE" SWITCH.
3. VALVE CLOSED LAMP: LED OR LONG-LIFE INCANDESCENT LAMP WITH SERIES-CONNECTED RESISTOR; AMBER LENS; ON WHENEVER CLOSED LIMIT SWITCH INDICATES THAT THE VALVE IS CLOSED.
4. VALVE OPEN LAMP: LED OR LONG-LIFE INCANDESCENT LAMP WITH SERIES-CONNECTED RESISTOR; AMBER LENS; ON WHENEVER OPEN LIMIT SWITCH INDICATES THAT THE VALVE IS OPEN.
5. MOTOR OVERLOAD LAMP: LED OR LONG-LIFE INCANDESCENT LAMP WITH SERIES-CONNECTED RESISTOR; RED LENS; ON WHENEVER POWER IS REMOVED FROM THE MOTOR BECAUSE OF AN OVERLOAD CONDITION.

PROVIDE NEW CONDUIT AND CONDUCTORS TO CONTROLLER AS INDICATED ON THE REVISED ONE-LINE. RECONNECT EXISTING CONTROL INPUTS.

(11) EXISTING WOUND ROTOR INDUCTION MOTOR MANUFACTURED BY GE, CIRCA 1919, WITH NAMEPLATE IDENTICAL TO THAT OF THE GATE MOTORS, TO BE REMOVED BY THE CORPS OF ENGINEERS. NEW SUMP PUMP AND ASSOCIATED CONTROL DEVICES (FLOAT SWITCHES, ETC.) AND PANEL SHALL BE FURNISHED AND INSTALLED BY OTHERS. PROVIDE NEW CONDUIT AND CONDUCTORS, AND MAKE FINAL POWER TERMINATIONS, TO NEW PUMP AND CONTROL PANEL AS INDICATED HEREIN. SEE MECHANICAL PLANS.

(12) REMOVE EXISTING WOUND ROTOR MOTOR CONTROLLER FOR VALVE MOTOR. INSTALL NEW 3-POLE, 60-AMP, 480-VOLT, FUSED DISCONNECT IN NEMA 4X STAINLESS STEEL ENCLOSURE FOR NEW SUMP PUMP.

PROVIDE NEW CONDUIT AND CONDUCTORS TO SWITCH AND CONTROLLER AS INDICATED ON THE ONE-LINE.

(13) REMOVE EXISTING CONDUCTORS TO VALVE MOTORS. ROUTE NEW CONDUIT AND CONDUCTORS OVERHEAD FROM THE NEW MOTOR CONTROLLERS AS INDICATED ON THE ONE-LINE. SEE MOTOR / CONTROLLER CONDUIT CONNECTION DETAILS. MAKE FINAL TERMINATIONS TO MOTOR WITH LFMC (LESS THAN 6-FEET).

(14) EXISTING SUMP PUMP AND ASSOCIATED CONTROL DEVICES (FLOAT SWITCHES, ETC.) AND PANEL TO BE REPLACED BY OTHERS. PROVIDE NEW CONDUIT AND CONDUCTORS, AND MAKE FINAL POWER TERMINATIONS, TO NEW PUMP AND NEW CONTROL PANEL AS INDICATED HEREIN. SEE MECHANICAL PLANS.

(15) REMOVE EXISTING DISCONNECT SWITCH AND PUMP STARTER. INSTALL NEW 3-POLE, 60-AMP, 480-VOLT, FUSED DISCONNECT IN NEMA 4X STAINLESS STEEL ENCLOSURE FOR NEW SUMP PUMP.

PROVIDE NEW CONDUIT AND CONDUCTORS TO SWITCH AND CONTROLLER AS INDICATED ON THE ONE-LINE.

(16) EXISTING WOUND ROTOR INDUCTION MOTOR MANUFACTURED BY GE, CIRCA 1919, WITH NAMEPLATE IDENTICAL TO THAT OF THE GATE MOTORS, FOR EXISTING CAPSTAN. CAPSTANS ARE NO LONGER USED. ABANDON EXISTING WIRING, CONDUITS, CONTROLLER, AND MOTOR IN PLACE.

(17) REMOVE EXISTING DEDICATED RECEPTACLE AND ASSOCIATED CONDUIT AND CONDUCTORS.

(18) REMOVE EXISTING DISCONNECT SWITCH / ENCLOSED CIRCUIT BREAKER. RE-FEED LOADS AS INDICATED ON ONE-LINE.

(19) PROVIDE A NEMA 4X, STAINLESS STEEL, 2-POLE, 60-AMP (FUSE AT 50-AMPS), FUSED DISCONNECT SWITCH FOR DEDICATED 50-AMP PORTABLE PUMP RECEPTACLE. BELOW SWITCH, PROVIDE A DEDICATED, MARINE-GRADE, CORROSION-RESISTANT, 50-AMP, 120/240-VOLT, 3-POLE, 4-WIRE, GROUNDING-TYPE, SURFACE-MOUNTED, WEATHERPROOF RECEPTACLE / POWER INLET. COORDINATE RECEPTACLE / POWER INLET REQUIREMENTS WITH THE OWNER PRIOR TO PURCHASE AND INSTALLATION.

(20) REMOVE EXISTING TRANSFORMER AND ALL ASSOCIATED CONDUIT AND CONDUCTORS. RE-FEED LOADS AS INDICATED ON ONE-LINE.

(21) EXISTING MITRE GATE WOUND ROTOR INDUCTION MOTOR (IDENTICAL TO THE OTHER MITRE GATE MOTORS) IN LOWER ELEVATION TO BE REWOUND, RECONDITIONED, AND TESTED BY A GE, ISO 9001, AND NEMA APPROVED MOTOR SHOP. THE REWINDING AND REFURBISHING PROCESS SHALL, AT A MINIMUM, ADHERE TO THE ONE SPECIFIED ON THESE DRAWINGS.

(22) ALTERNATE CIRCUITS BETWEEN FIXTURES.

(23) EXISTING WOUND ROTOR INDUCTION MOTOR MANUFACTURED BY GE, CIRCA 1919, WITH NAMEPLATE IDENTICAL TO THAT OF THE GATE MOTORS, TO REMAIN.

(24) REPLACE EXISTING WOUND ROTOR MOTOR CONTROLLER WITH NEW, CUSTOM FABRICATED, COMBINATION (CIRCUIT BREAKER TYPE) DISCONNECT SWITCH / MOTOR CONTROLLER PER THE BELOW.

DISCONNECTING MEANS SHALL BE LOCATED ON THE EXTERIOR OF THE CONTROL ENCLOSURE.

PROVIDE A SEPARATE 2-POLE, 20-AMP, 240-VOLT TOGGLE SWITCH INSIDE OF THE ENCLOSURE TO DISCONNECT CONTROL POWER. CONTROL POWER SHALL BE PROVIDED FROM A SEPARATE POWER SOURCE OR SHALL BE PROVIDED VIA A CONTROL TRANSFORMER CONNECTED UPSTREAM OF THE MOTOR DISCONNECT SWITCH (SO THAT CONTROLS CAN BE TESTED WHILE POWER IS DISCONNECTED FROM THE MOTOR).

FURNISH CONTROLLER / DISCONNECT WITH STAINLESS STEEL, NEMA 4X ENCLOSURE. PROVIDE SPACE HEATER AND HUMIDISTAT, WITH ASSOCIATED RELAYS AS NECESSARY, INSIDE OF THE ENCLOSURE TO PREVENT CONDENSATION. SET HUMIDISTAT CONTROLS TO 80% RH, NON-CONDENSING. MAXIMUM ENCLOSURE DIMENSIONS SHALL BE 48-INCHES WIDE BY 60-INCHES HIGH.

PROVIDE THE FOLLOWING OPERATOR INTERFACES ON THE COVER OF THE ENCLOSURE:

1. "HAND-OFF-AUTO" SWITCH: HEAVY DUTY, 30mm, CORROSION-RESISTANT, 3-POSITION SELECTOR SWITCH WITH ROTARY KNOB. IN THE AUTO POSITION, VALVE SHALL OPERATE VIA EXISTING, EXTERNAL CONTROL INPUTS. IN THE HAND POSITION, THE "OPEN-OFF-CLOSE" SWITCH SHALL OVERRIDE EXTERNAL CONTROL INPUTS AND CONTROL VALVE OPERATION.
2. "OPEN-OFF-CLOSE" SWITCH: HEAVY DUTY, 30mm, CORROSION-RESISTANT, 3-POSITION SELECTOR SWITCH WITH ROTARY KNOB. WHEN THE "HAND-OFF-AUTO" SWITCH IS IN THE HAND POSITION, THE "OPEN-OFF-CLOSE" SWITCH CONTROLS THE OPERATION OF THE MOTOR. LIMIT SWITCHES, OVERLOADS, INTERLOCKS AND SAFETIES SHALL NOT BE BYPASSED BY THE "OPEN-OFF-CLOSE" SWITCH.
3. VALVE CLOSED LAMP: LED OR LONG-LIFE INCANDESCENT LAMP WITH SERIES-CONNECTED RESISTOR; AMBER LENS; ON WHENEVER CLOSED LIMIT SWITCH INDICATES THAT THE VALVE IS CLOSED.
4. VALVE OPEN LAMP: LED OR LONG-LIFE INCANDESCENT LAMP WITH SERIES-CONNECTED RESISTOR; AMBER LENS; ON WHENEVER OPEN LIMIT SWITCH INDICATES THAT THE VALVE IS OPEN.
5. MOTOR OVERLOAD LAMP: LED OR LONG-LIFE INCANDESCENT LAMP WITH SERIES-CONNECTED RESISTOR; RED LENS; ON WHENEVER POWER IS REMOVED FROM THE MOTOR BECAUSE OF AN OVERLOAD CONDITION.

REPLACE THE EXISTING RESISTOR BANKS CONNECTED TO THE MOTOR SECONDARY WITH NEW STAINLESS STEEL RESISTORS OF EQUAL POWER AND IMPEDANCE RATING. VERIFY RATINGS WITH ACTUAL MEASUREMENTS IN THE FIELD. RETURN THE EXISTING CAST IRON RESISTOR BANKS TO THE OWNER. LABEL THE RESISTOR BANKS WITH A TAG IDENTIFYING WHICH MOTOR IT WAS ORIGINALLY CONNECTED TO.

PROVIDE SHOP DRAWINGS FOR THE CONTROLLER AND ENCLOSURE. AT A MINIMUM, SHOP DRAWINGS SHALL CONTAIN THE FOLLOWING INFORMATION:

1. TO-SCALE INTERIOR COMPONENT LAYOUT DRAWING ILLUSTRATING ENCLOSURE DIMENSIONS WITH IDENTIFICATION OF (AND PLACEMENT OF) INTERIOR COMPONENTS.
2. TO-SCALE ELEVATION VIEW OF THE FRONT COVER ILLUSTRATING LAYOUT OF OPERATOR INTERFACES.
3. MOTOR CONTROL WIRING DIAGRAM INDICATING CONNECTIONS TO COMPONENTS INSIDE AND REMOTE FROM THE ENCLOSURE, INCLUDING ALL LIMIT SWITCHES, REMOTE OPERATOR CONTROLS, ETC. IDENTIFY ALL VOLTAGES, TERMINALS, WIRE SIZES, COLOR AND/OR NUMBERING IDENTIFICATION SCHEMES, COMPONENT LOCATIONS, ETC.

PROVIDE NEW CONDUIT AND CONDUCTORS TO THE CONTROLLER AS INDICATED ON THE ONE-LINE. IDENTIFY AND RECONNECT EXISTING CONTROL INPUTS.

(25) PROVIDE JB WITH WEATHERPROOF SWITCH TO FEED SHAFT LIGHT AND RECEPTACLE. RECEPTACLE SHALL BE CORROSION-RESISTANT, MARINE-GRADE. ENCLOSURE SHALL BE WATER-TIGHT. SEE SHAFT LIGHTING DETAIL ON SHEET E5.

(26) REPLACE EXITING DISCONNECT SWITCH WITH A NEW NEMA 4X STAINLESS STEEL FUSED DISCONNECT SWITCH. NEW SWITCH SHALL MATCH THE SIZE, VOLTAGE, AND AMP RATING OF THE ONE REPLACED, UNLESS NOTED OTHERWISE. RECONNECT EXISTING LOAD, UNLESS NOTED OTHERWISE.

(27) INSTALL NEW MINI-POWER ZONE ADJACENT TO EXISTING RECESSED PANEL. ROUTE SURFACE CONDUIT AND CONDUCTORS TO POWER CENTER AS INDICATED ON THE ONE-LINE. PROVIDE NEW BRANCH CIRCUIT WIRING AND CONDUIT TO MACHINERY ROOM / GALLERY LIGHTS AND RECEPTACLES AS INDICATED ON THE MACHINERY ROOM AND GALLERY PLANS. REMOVE BREAKERS IN THE EXISTING PANEL AS LOADS ARE TRANSFERRED TO THE POWER CENTER. MAXIMUM MINI-POWER ZONE DIMENSIONS SHALL BE 18-INCHES WIDE BY 48-INCHES HIGH.

TRACE-OUT AND RE-FEED (OR ABANDON IF ALLOWED) ANY REMAINING CIRCUITS IN THE EXISTING PANEL THAT ARE NOT FOR MACHINERY ROOM LIGHTS OR RECEPTACLES. UTILIZE SPARE BREAKERS IN THE POWER CENTER TO RE-FEED EXISTING CIRCUITS. NOTIFY ENGINEER OF CIRCUITS TO BE RE-FED PRIOR TO PERFORMING WORK. PLACE A 24-INCH BY 24-INCH JUNCTION BOX OVER THE EXISTING RECESSED PANEL TO RE-FEED CIRCUITS. ONCE ALL EXISTING PANEL LOADS HAVE BEEN RE-FED OR ABANDONED, PLACE BLANK COVER OVER EXISTING PANEL / JUNCTION BOX.

(28) FURNISH AND INSTALL NEW ECB AND PANEL HD-XX PER THE PANEL SCHEDULE. MAXIMUM ECB DIMENSIONS SHALL BE 18-INCHES WIDE BY 48-INCHES HIGH. MAXIMUM HD-XX DIMENSIONS SHALL BE 48-INCHES WIDE BY 68-INCHES HIGH. FIELD VERIFY DIMENSIONS PRIOR TO INSTALLATION.

(29) REMOVE EXISTING 60-AMP FUSED DISCONNECT SWITCH FEEDING 25 KVA TRANSFORMER SERVING EXISTING 200-AMP, 120/240-VOLT PANEL "LXX". TEMPORARILY RE-FEED EXISTING TRANSFORMER FROM HD-XX UNTIL TRANSFORMER IS REPLACED.

(30) REPLACE EXISTING 25KVA TRANSFORMER AND ADJACENT EXISTING PANEL "LXX" WITH NEW MINI-POWER ZONE LD-XX AS SCHEDULED. RECONNECT EXISTING CIRCUITS TO NEW PANEL. TRACE OUT UNIDENTIFIED EXISTING CIRCUITS AND PROPERLY LABEL THE PANEL SCHEDULE. MAXIMUM MINI-POWER ZONE DIMENSIONS SHALL BE 18-INCHES WIDE BY 48-INCHES HIGH.

(31) RECONNECT EXISTING 120-VOLT, 175-WATT FLOODLIGHT TO PANEL LD-XX. ROUTE 2#12, #12 GROUND IN LFMC TO INSIDE OF THE MACHINERY ROOM. PROVIDE A JUNCTION BOX AND THEN ROUTE CONDUCTORS IN RIGID CONDUIT BACK TO PANEL. ROUTE THROUGH LIGHTING CONTACTOR PANEL. SEE PANEL SCHEDULES.

SPECIFIC NOTES (WEST LAKE-END MACHINERY ROOM POWER):

(32)-(35) NOT USED.

(36) REPLACE EXISTING PANEL "11N" WITH NEW MINI-POWER ZONE "LL-11N" (AS SCHEDULED). ROUTE SURFACE CONDUIT AND CONDUCTORS TO "LL-11N" AS INDICATED ON THE ONE-LINE. RECONNECT EXISTING CIRCUITS AND PROVIDE NEW BRANCH CIRCUIT WIRING AND CONDUIT TO LOWER ELEVATION MACHINERY ROOM LIGHTS AND RECEPTACLES AS INDICATED ON THE MACHINERY ROOM PLANS.

(37) REMOVE EXISTING TRANSFORMER AND DISCONNECT SWITCH. RECONNECT TRANSFORMER SECONDARY CIRCUITS TO NEW PANEL "LD-NW" TO FEED THE NORTH OPERATOR SHACK.

(38) EXISTING 300 HP MOTOR MANUFACTURED BY WESTINGHOUSE, CIRCA 1919, FOR EXISTING DE-WATERING PUMP. PUMP IS NO LONGER USED. ABANDON EXISTING WIRING, CONDUITS, CONTROLLER, AND MOTOR IN PLACE.

(39) REPLACE EXISTING TROUGH DOWN STAIRS AND ALONG WALL WITH CONDUITS AS NECESSARY TO RE-FEED GATE MOTOR AND PANEL "LL-11N" LOADS. SEE ONE-LINE.

(40) PROVIDE 200-AMP, NON-FUSED, NEMA 4X STAINLESS STEEL DISCONNECT SWITCH FOR GATE MOTOR.

(41) EXISTING AIR COMPRESSOR TO REMAIN.

(42) PROVIDE NEW 30-AMP, NEMA 4X, STAINLESS STEEL, FUSED DISCONNECT SWITCH FOR AIR COMPRESSOR. MAKE FINAL CONNECTIONS FROM DISCONNECT TO COMPRESSOR WITH LFMC.

(43) EXISTING WATER HEATER TO REMAIN.

(44) PROVIDE NEW 30-AMP, NEMA 4X, STAINLESS STEEL, FUSED DISCONNECT SWITCH FOR WATER HEATER. MAKE FINAL CONNECTIONS FROM DISCONNECT TO WATER HEATER WITH LFMC.

(45) REMOVE PUMP CONTROLLER AND RETURN TO THE OWNER ONCE NEW SUMP PUMP IS INSTALLED AND TESTED.

(46) REPLACE EXISTING 50KVA TRANSFORMER WITH NEW 50KVA, 480:240/120-VOLT, SINGLE PHASE TRANSFORMER. SEE MOUNTING DETAIL ON SHEET E21.

(47) REPLACE EXISTING 60-AMP FUSED DISCONNECT SWITCH WITH A NEMA 4X, STAINLESS STEEL, 480-VOLT, 200-AMP FUSED DISCONNECT SWITCH. FUSE AT 150-AMPS. SEE ONE-LINE.

(48)-(50) NOT USED.

SPECIFIC NOTES (EAST LAKE-END MACHINERY ROOM POWER):

(51)-(55) NOT USED.

(56) REPLACE EXISTING PANEL "12N" WITH NEW MINI-POWER ZONE "LL-12N" (AS SCHEDULED). ROUTE SURFACE CONDUIT AND CONDUCTORS TO "LL-12N" AS INDICATED ON THE ONE-LINE. RECONNECT EXISTING CIRCUITS AND PROVIDE NEW BRANCH CIRCUIT WIRING AND CONDUIT TO LOWER ELEVATION MACHINERY ROOM LIGHTS AND RECEPTACLES AS INDICATED ON THE MACHINERY ROOM PLANS.

(57) NOT USED.

(58) EXISTING PANEL "LDC". PANEL USED TO FEED LOW-VOLTAGE PANELS AND SITE LIGHTING ON THE EAST SIDE. PLACE BLANK COVER OVER EXISTING PANEL AND ABANDON IN PLACE ONCE EXISTING LOADS ARE RE-SERVED.

(59) REPLACE EXISTING TROUGH DOWN STAIRS AND ALONG WALL WITH CONDUITS AS NECESSARY TO RE-FEED GATE MOTOR AND PANEL "LL-12N" LOADS. SEE ONE-LINE.

(60) PROVIDE 200-AMP, NON-FUSED, NEMA 4X STAINLESS STEEL DISCONNECT SWITCH FOR GATE MOTOR.

(61) NOT USED.

(62) ONCE NEW SUMP PUMP IS INSTALLED, REMOVE EXITING TRANSFORMER FEEDING TEMPORARY SUMP PUMP.

(63)-(70) NOT USED.

SPECIFIC NOTES (WEST RIVER-END MACHINERY ROOM POWER):

(71)-(76) NOT USED.

(77) REMOVE EXISTING TRANSFORMER AND DISCONNECT SWITCH. RECONNECT TRANSFORMER SECONDARY CIRCUITS TO NEW PANEL "LD-SW" TO FEED THE SOUTH OPERATOR SHACK.

(78) REMOVE EXISTING TRANSFORMER AND DISCONNECT SWITCH AND REPLACE WITH NEW STAINLESS STEEL FUSED DISCONNECT AND STAINLESS STEEL TRANSFORMER. RECONNECT TO EXISTING FEED FOR THE SOUTH CONTROL HOUSE. SEE ONE-LINE.

(79) REMOVE EXISTING 200-AMP DISCONNECT SWITCH AND ALL ASSOCIATED CONDUIT AND CONDUCTORS FOR "CAPSTAN".

(80) NOT USED.

SPECIFIC NOTES (EAST RIVER-END MACHINERY ROOM POWER):

(81)-(86) NOT USED.

(87) REPLACE EXISTING 200-AMP, 3-POLE DISCONNECT SWITCH WITH A 200-AMP, 3-POLE, NEMA 4X, STAINLESS STEEL DISCONNECT SWITCH. PROVIDE NEW CONDUIT AND CONDUCTORS TO SWITCH AS INDICATED ON THE ONE-LINE. RECONNECT TO THE EXISTING DRAW BRIDGE FEEDER. REPLACE EXISTING BRIDGE HOUSE MAIN DISCONNECT WITH A MANUAL TRANSFER SWITCH AS INDICATED ON THE REVISED ONE-LINE.

This drawing has been reduced to half size

© 2006 IMC 1404A CONSULTING ENGINEERS INC. 3120 20th STREET METAIRIE, LOUISIANA 70002

US Army Corps of Engineers New Orleans District

MARK | DATE | APPR | DESCRIPTION

U. S. ARMY ENGINEER DISTRICT, NEW ORLEANS
CORPS OF ENGINEERS
NEW ORLEANS, LOUISIANA

DESIGNED BY: PSV
CHECKED BY: KMCL
DRAWN BY: KLH
DATE: 02-17-06
PLOT SCALE: 1=2
PLOT DATE: 02-17-06
DESIGN FILE NAME: J:/1404A/ELEC/E4
SUBMITTED BY: PAUL VLOSICH, DESIGN ENGINEER
SOLICITATION NO.: W912P8-06-B-0034

INNER HARBOR NAVIGATION CANAL
ORLEANS PARISH, LA.
IHNC SITE
MACHINERY ROOM
SPECIFIC NOTES

FILE NUMBER E4
DWG. 6 OF 35

Safety is a Part of Your Contract

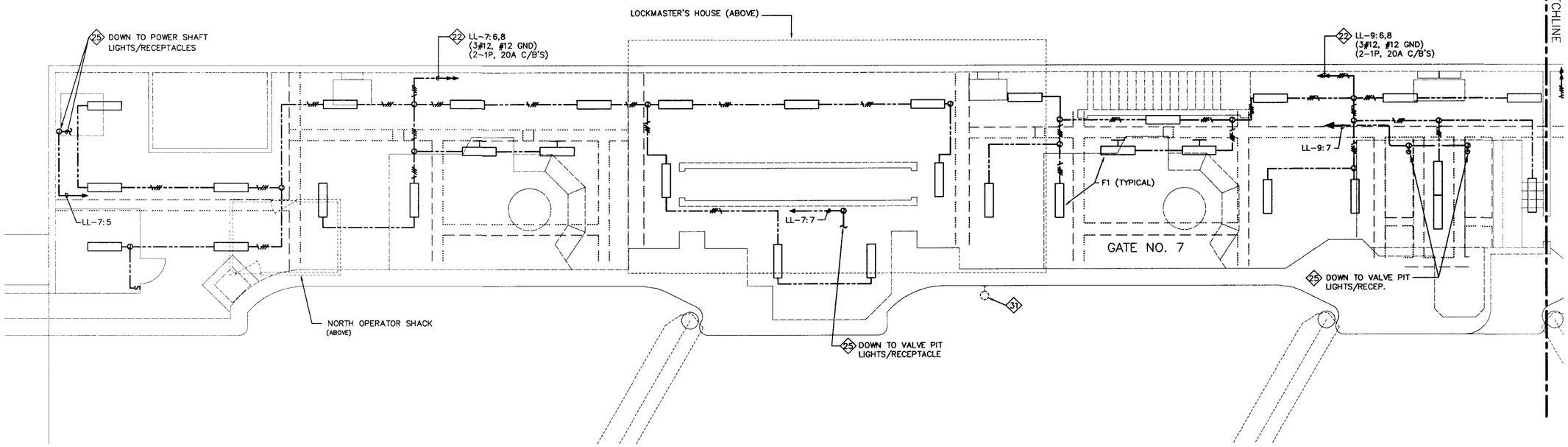

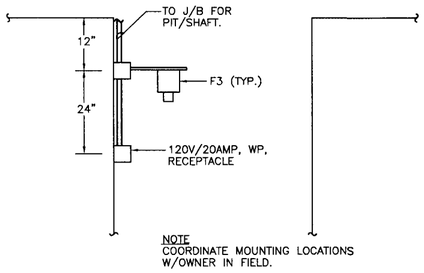

2 **PIT/SHAFT LIGHTING DETAIL**
SCALE: NONE

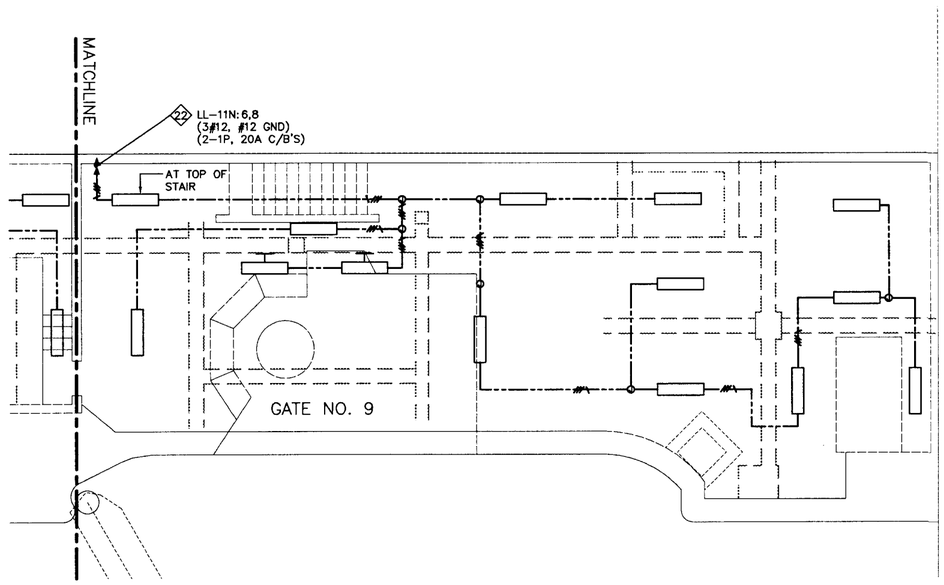

1 **IHNC WEST LAKE-END MACHINERY ROOM - LIGHTING PLAN**

SCALE: 1" = 5'

5' 0 5' 10' 15' 20'

SEE SHEET E4 FOR SPECIFIC NOTES

This drawing has been reduced to half size

US Army Corps of Engineers New Orleans District

MARK	DESCRIPTION	DATE	APPR

U. S. ARMY ENGINEER DISTRICT, NEW ORLEANS
CORPS OF ENGINEERS
NEW ORLEANS, LOUISIANA

DESIGNED BY: PSV
CHECKED BY: KMCL
DRAWN BY: KLH
DATE: 02-17-06
PLOT SCALE: 1=2
PLOT DATE: 02-17-06
DESIGN FILE NAME: J:/1404A/ELEC/E5
SUBMITTED BY: PAUL VLOSICH DESIGN ENGINEER
SOLICITATION NO. W912P8-06-B-0034

INNER HARBOR NAVIGATION CANAL
ORLEANS PARISH, LA.
IHNC
WEST LAKE-END MACHINERY ROOM
LIGHTING PLAN

FILE NUMBER E5
DWG. 7 OF 35

© 2006 IMC 1404A
CONSULTING ENGINEERS INC.
3120 20th STREET
METAIRIE, LOUISIANA 70002

Safety is a Part of Your Contract

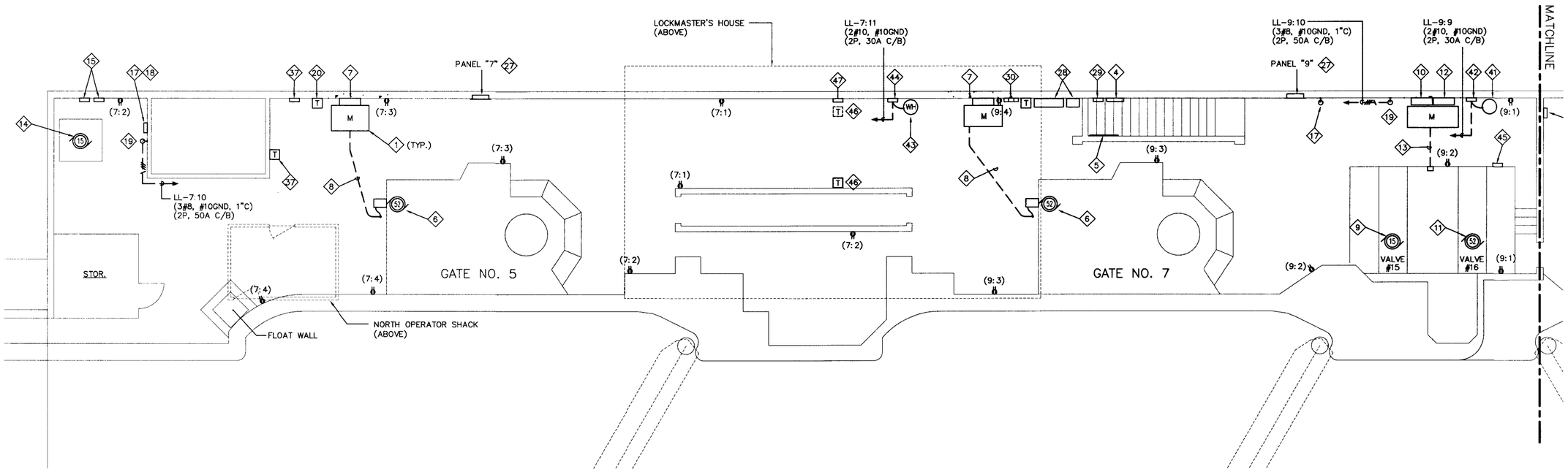

SEE SHEET E4 FOR SPECIFIC NOTES

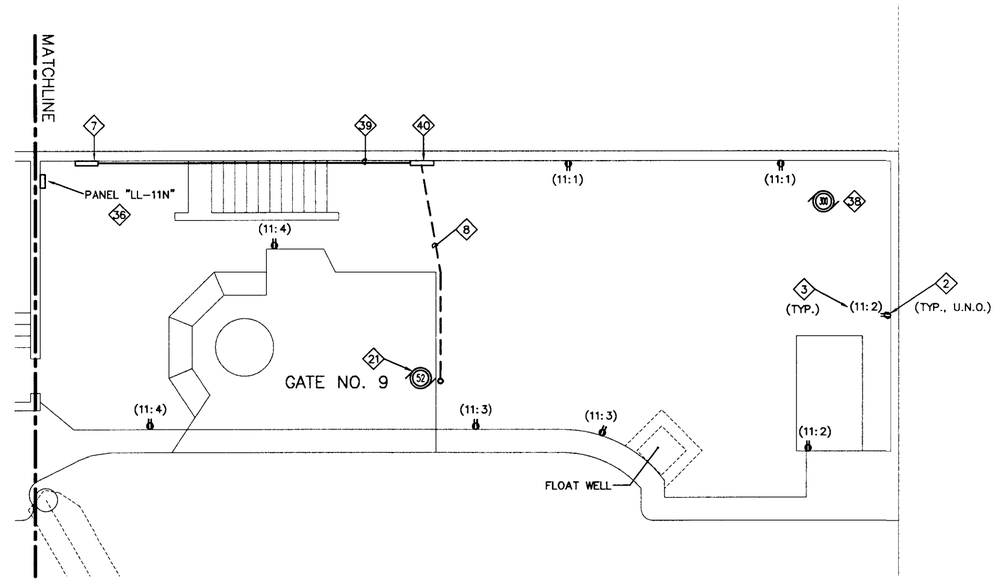

1 IHNC WEST LAKE-END MACHINERY ROOM - POWER PLAN

SCALE: 1" = 5'

5' 0 5' 10' 15' 20'

This drawing has been reduced to half size

VALUE INCENTIVE CLASSIC ENGINEERING YOUR KEY TO HIGHER PROFITS

© 2006 IMC 1404A CONSULTING ENGINEERS INC.
3120 20th STREET
METAIRIE, LOUISIANA 70002

US Army Corps of Engineers New Orleans District

MARK	DESCRIPTION	DATE	APPR.

MARK	DESCRIPTION	DATE	APPR.

U. S. ARMY ENGINEER DISTRICT, NEW ORLEANS
CORPS OF ENGINEERS
NEW ORLEANS, LOUISIANA

DESIGNED BY: PSV
CHECKED BY: KMCL
DRAWN BY: KLH
DATE: 02-17-06

PLOT SCALE: 1=2
PLOT DATE: 02-17-06

DESIGN FILE NAME: J:/1404A/ELEC/E6
SUBMIT TO: PAUL W. OSICH DESIGN ENGINEER
SOLICITATION NO. - W912P8-06-B-0034

INNER HARBOR NAVIGATION CANAL
ORLEANS PARISH, LA.
IHNC
WEST LAKE-END MACHINERY ROOM
POWER PLAN

FILE NUMBER
E6

DWG. 8 OF 35

Safety is a Part of Your Contract

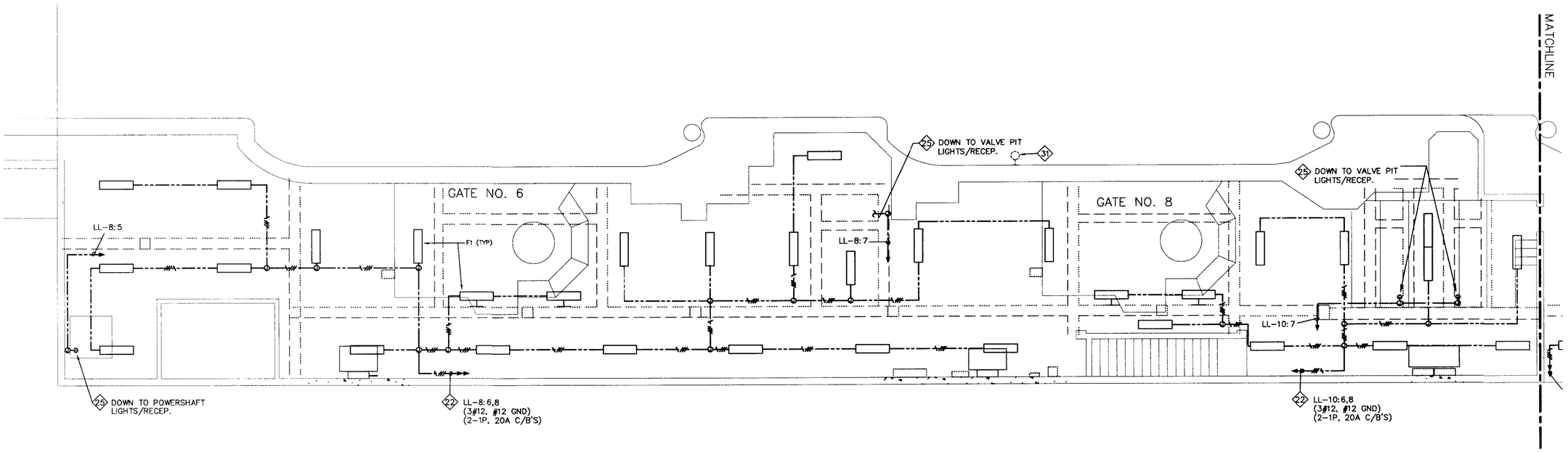

SEE SHEET E4 FOR SPECIFIC NOTES

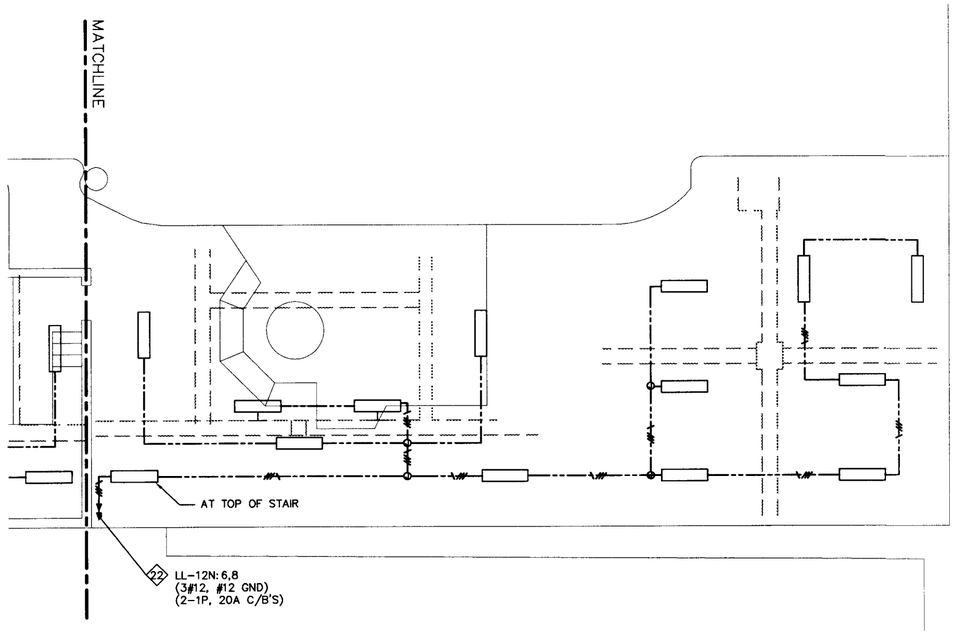

1 IHNC EAST LAKE-END MACHINERY ROOM - LIGHTING PLAN

SCALE: 1" = 5'

5' 0 5' 10' 15' 20'

This drawing has been reduced to half size

©2006 IMC 1404A CONSULTING ENGINEERS INC. 3120 20th STREET METAIRIE, LOUISIANA 70002

US Army Corps of Engineers New Orleans District

MARK	DESCRIPTION	DATE	APPR.	MARK	DESCRIPTION	DATE	APPR.

U. S. ARMY ENGINEER DISTRICT, NEW ORLEANS
CORPS OF ENGINEERS
NEW ORLEANS, LOUISIANA

DESIGNED BY: PSV
CHECKED BY: KMCL
DRAWN BY: KLH
DATE: 02-17-06

PLOT SCALE: 1=2
PLOT DATE: 02-17-06

DESIGN FILE NAME: J:/1404A/ELEC/E7
SUBMITTED BY: PAUL VLOSICH – DESIGN ENGINEER
SOLICITATION NO. – W912P8-06-B-0034

INNER HARBOR NAVIGATION CANAL
ORLEANS PARISH, LA.
IHNC
EAST LAKE-END MACHINERY ROOM
LIGHTING PLAN

FILE NUMBER E7

DWG. 9 OF 35

Safety is a Part of Your Contract

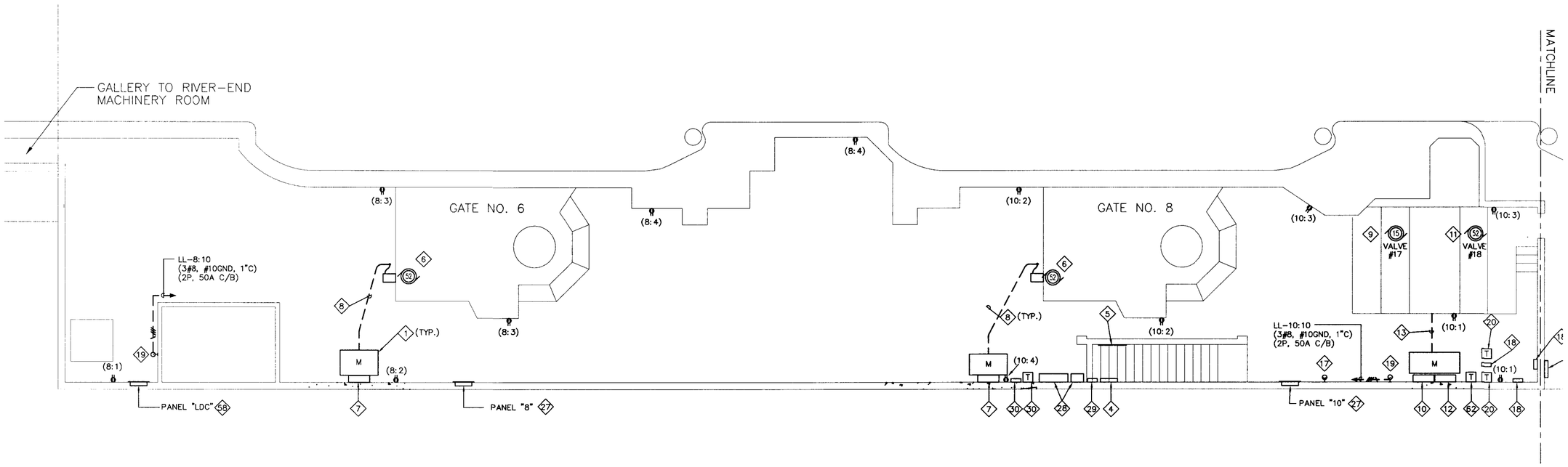

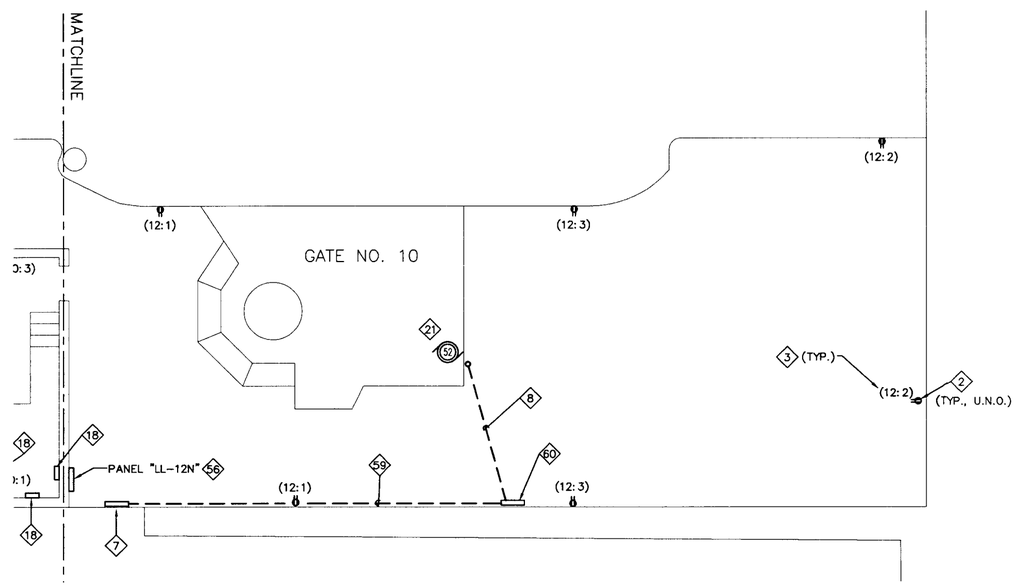

SEE SHEET E4 FOR SPECIFIC NOTES

1 IHNC EAST LAKE-END MACHINERY ROOM - POWER PLAN

SCALE: 1" = 5'

5' 0 5' 10' 15' 20'

This drawing has been reduced to half size

© 2006 IMC 1404A
CONSULTING ENGINEERS
INC.
3120 20th STREET
METAIRIE, LOUISIANA 70002

US Army Corps of Engineers New Orleans District

MARK	DESCRIPTION	DATE	APPR.	MARK	DESCRIPTION	DATE	APPR.

U. S. ARMY ENGINEER DISTRICT, NEW ORLEANS
CORPS OF ENGINEERS
NEW ORLEANS, LOUISIANA

DESIGNED BY: PSV
CHECKED BY: KMCL
DRAWN BY: KLH
DATE: 02-17-06

PLOT SCALE: 1=2
PLOT DATE: 02-17-06
DESIGN FILE NAME: J:/1404A/ELEC/E8
SUBMITTED BY: PAUL VLOSICH, DESIGN ENGINEER
SOLICITATION NO. W912P8-06-B-0034

INNER HARBOR NAVIGATION CANAL
ORLEANS PARISH, LA.
IHNC
EAST LAKE-END MACHINERY ROOM
POWER PLAN

FILE NUMBER E8

DWG. 10 OF 35

Safety is a Part of Your Contract

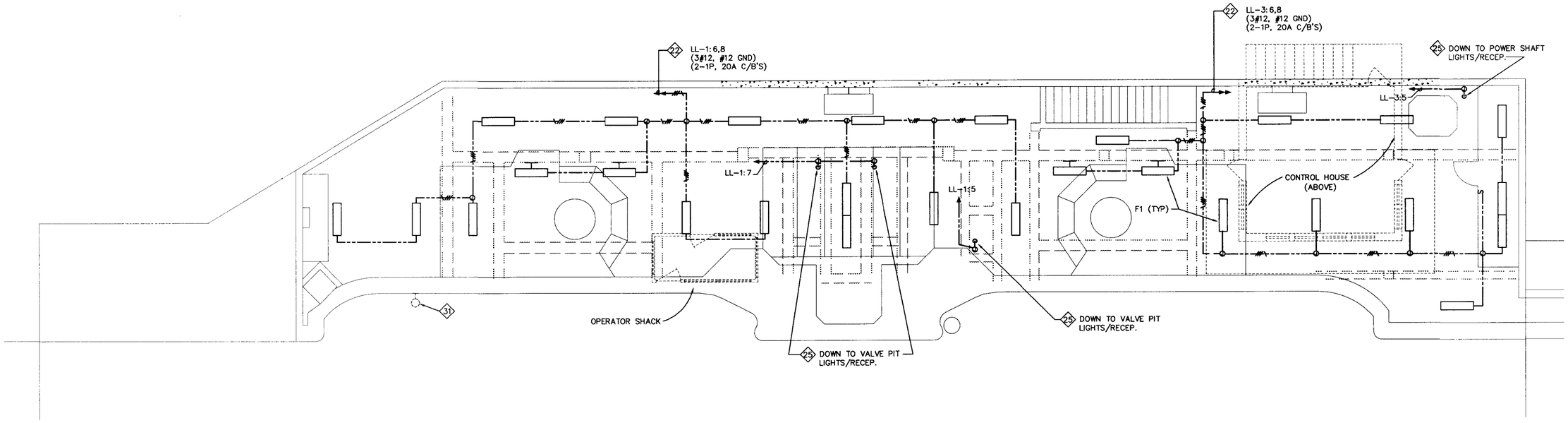

1 IHNC WEST RIVER-END MACHINERY ROOM - LIGHTING PLAN

SCALE: 1" = 5'

5' 0 5' 10' 15' 20'

SEE SHEET E4 FOR SPECIFIC NOTES

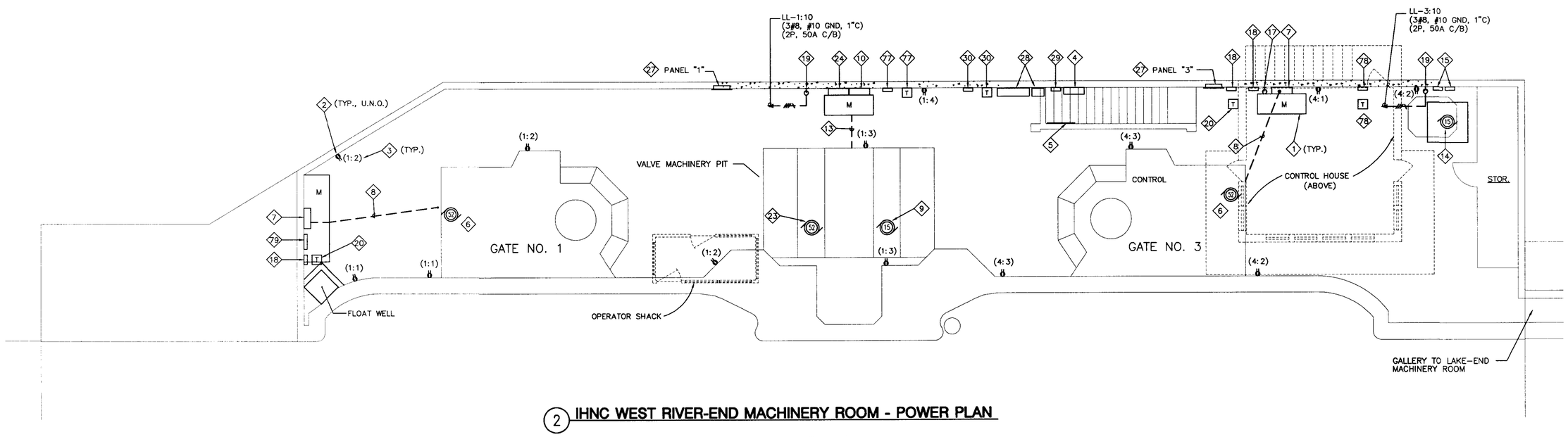

2 IHNC WEST RIVER-END MACHINERY ROOM - POWER PLAN

SCALE: 1" = 5'

5' 0 5' 10' 15' 20'

This drawing has been reduced to half size

VALUE INGENUITY CLASSES YOUR KEY TO HIGHER PROFITS ENGINEERING

© 2006 IMC 1404A
IMC CONSULTING ENGINEERS
INC.
3120 20th STREET
METAIRIE, LOUISIANA 70002

US Army Corps of Engineers New Orleans District

MARK	DESCRIPTION	DATE	APPR.	MARK	DESCRIPTION	DATE	APPR.

U. S. ARMY ENGINEER DISTRICT, NEW ORLEANS
CORPS OF ENGINEERS
NEW ORLEANS, LOUISIANA

DESIGNED BY: PSV
CHECKED BY: KMCL
DRAWN BY: KLH
DATE: 02-17-06

PLOT SCALE: 1=2
PLOT DATE: 02-17-06

DESIGN FILE NAME: J:/404A/ELEC/E9
SUBMITTED BY: PAUL VLOSICH – DESIGN ENGINEER
SOLICITATION NO. W912P8-06-B-0034

INNER HARBOR NAVIGATION CANAL
ORLEANS PARISH, LA.
IHNC
WEST RIVER-END MACHINERY ROOM
LIGHTING/POWER PLAN

FILE NUMBER
E9
DWG. 11 OF 35

Safety is a Part of Your Contract

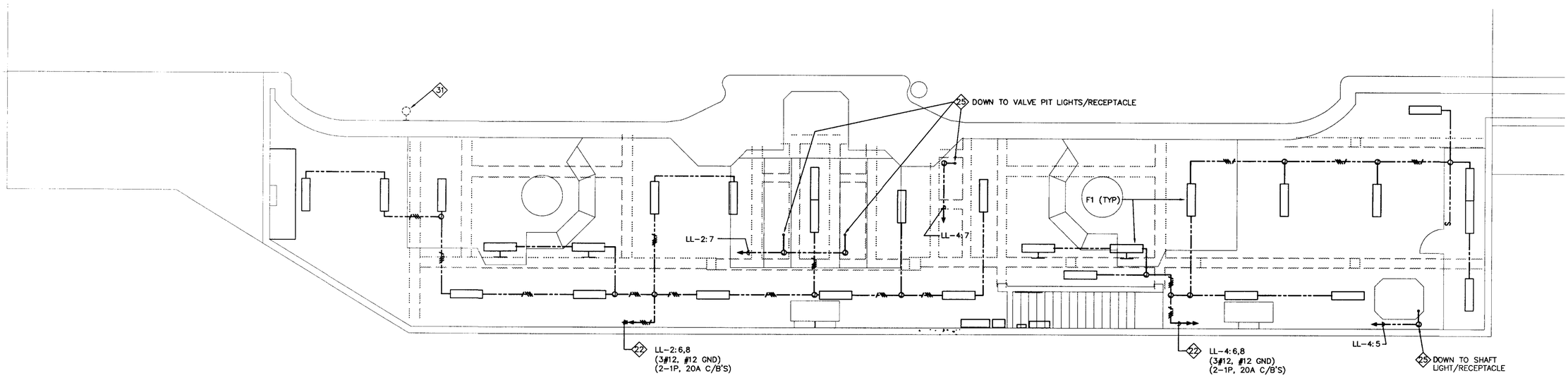

1 IHNC EAST RIVER-END MACHINERY ROOM - LIGHTING PLAN

SCALE: 1" = 5'

5' 0 5' 10' 15' 20'

SEE SHEET E4 FOR SPECIFIC NOTES

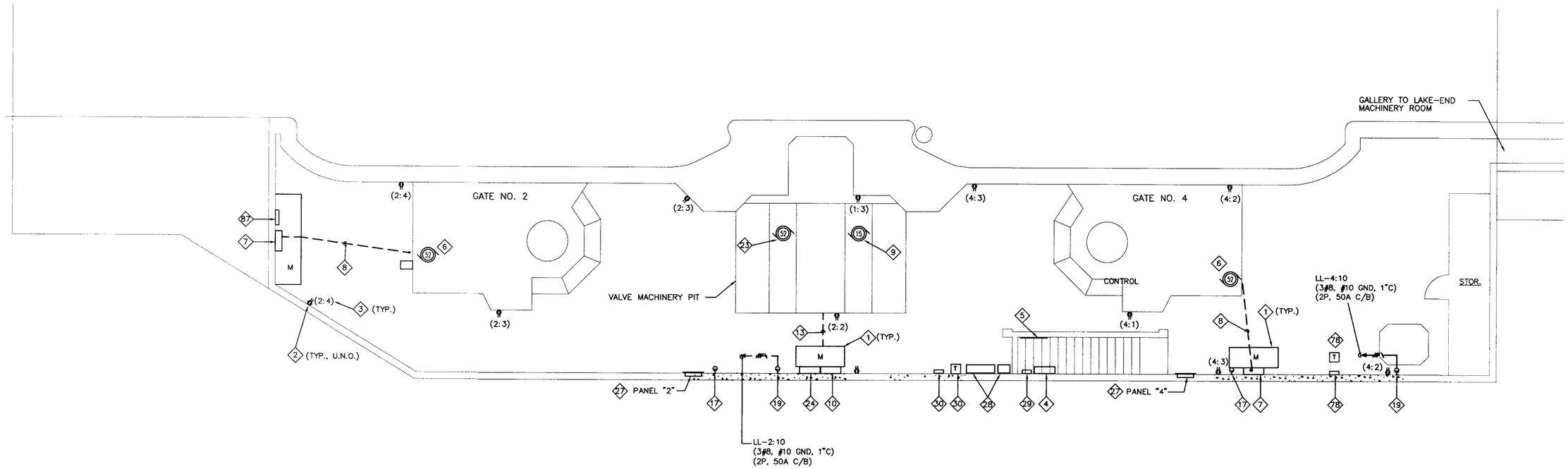

2 IHNC EAST RIVER-END MACHINERY ROOM - POWER PLAN

SCALE: 1" = 5'

5' 0 5' 10' 15' 20'

This drawing has been reduced to half size

VALUE INCENTIVE CLAUSES ENGINEERING — YOUR KEY TO HIGHER PROFITS

© 2006 IMC 1404A
CONSULTING ENGINEERS INC.
3120 20th STREET
METAIRIE, LOUISIANA 70002

US Army Corps of Engineers New Orleans District

MARK	DESCRIPTION	DATE	APPR

U. S. ARMY ENGINEER DISTRICT, NEW ORLEANS
CORPS OF ENGINEERS
NEW ORLEANS, LOUISIANA

DESIGNED BY: PSV
CHECKED BY: KMCL
DRAWN BY: KLH
DATE: 02-17-06
PLOT SCALE: 1=2
PLOT DATE: 02-17-06
DESIGN FILE NAME: J:/1404A/ELEC/E10
SUBMITTED BY: PAUL VLOSICH DESIGN ENGINEER
SOLICITATION NO. W912P8-06-B-0034

INNER HARBOR NAVIGATION CANAL
ORLEANS PARISH, LA.
IHNC
EAST RIVER-END MACHINERY ROOM
LIGHTING/POWER PLAN

FILE NUMBER E10
DWG. 12 OF 35

Safety is a Part of Your Contract

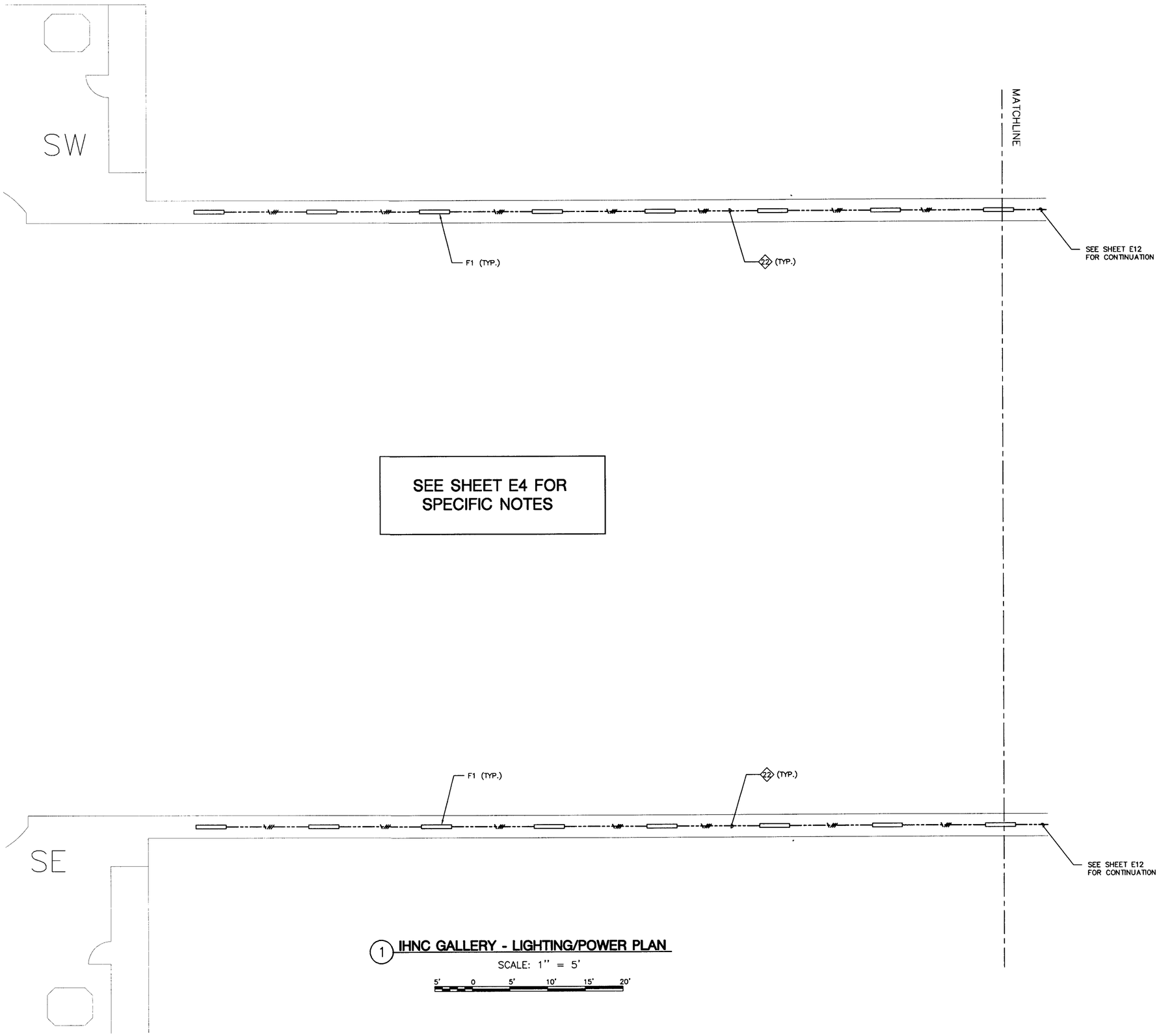

1 IHNC GALLERY - LIGHTING/POWER PLAN

SCALE: 1" = 5'

5' 0 5' 10' 15' 20'

This drawing has been reduced to half size

© 2006 IMC 1404A
CONSULTING ENGINEERS
INC.
3120 20th STREET
METAIRIE, LOUISIANA 70002

US Army Corps of Engineers
New Orleans District

MARK	DESCRIPTION	DATE	APPR.

MARK	DESCRIPTION	DATE	APPR.

U. S. ARMY ENGINEER DISTRICT, NEW ORLEANS
CORPS OF ENGINEERS
NEW ORLEANS, LOUISIANA

DESIGNED BY: PSV
CHECKED BY: KWCL
DRAWN BY: KLH
DATE: 02-17-06

PLOT SCALE: 1=2
PLOT DATE: 02-17-06

DESIGN FILE NAME: J:/1404A/ELEC/E11
SUBMITTED BY: PAUL V. LOSICH
DESIGN ENGINEER
SOLICITATION NO. - W912P8-06-B-0034

INNER HARBOR NAVIGATION CANAL
ORLEANS PARISH, LA.
IHNC GALLERY
LIGHTING/POWER PLAN

FILE NUMBER
E11
DWG. 13 OF 35

Safety is a Part of Your Contract

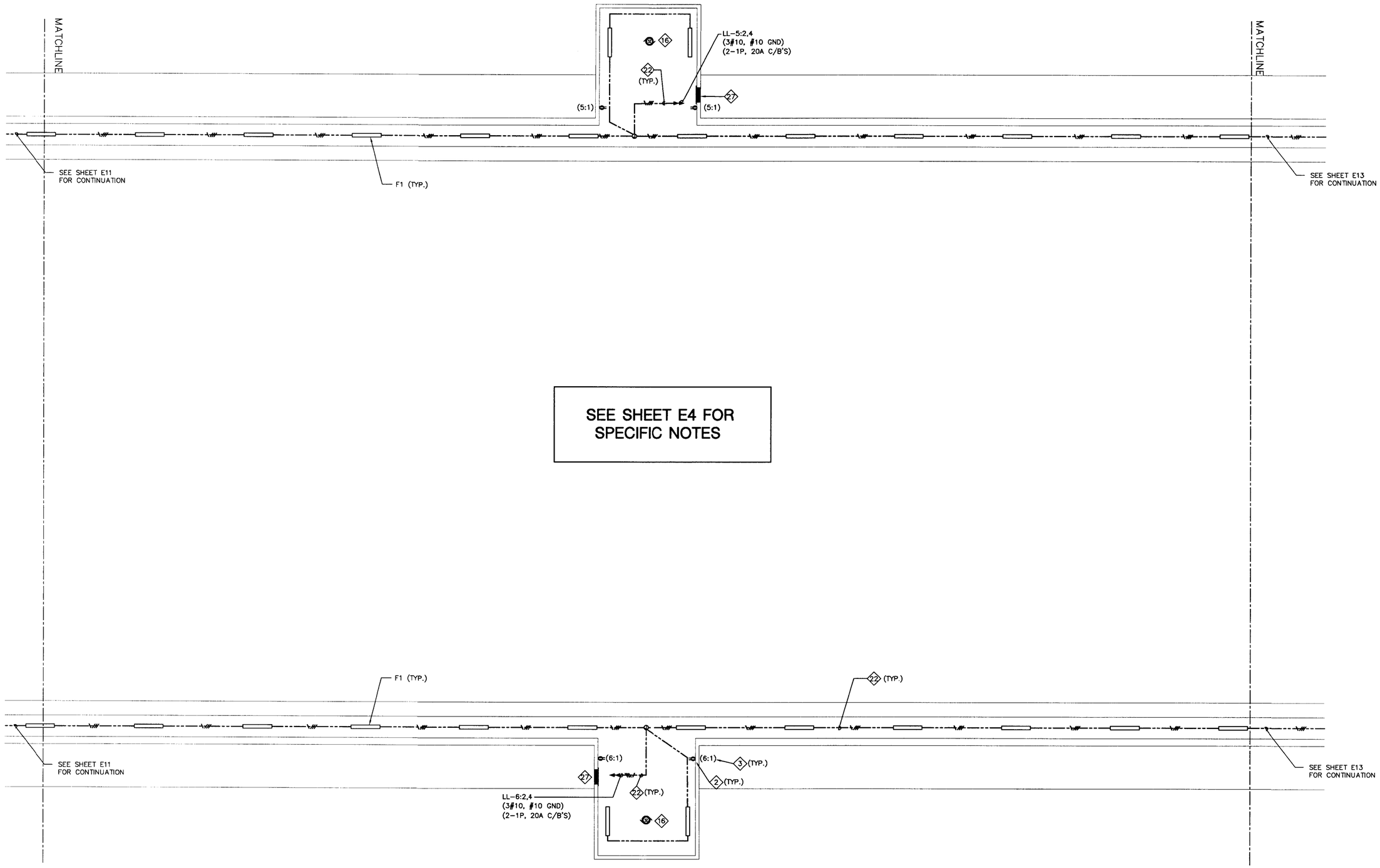

SEE SHEET E4 FOR SPECIFIC NOTES

1 IHNC GALLERY - LIGHTING/POWER PLAN

SCALE: 1" = 5'

5' 0 5' 10' 15' 20'

This drawing has been reduced to half size

© 2006 IMC 1404A CONSULTING ENGINEERS INC.
3120 20th STREET
METAIRIE, LOUISIANA 70002

VALUE INGENUITY SAVINGS ENGINEERING YOUR KEY TO HIGHER PROFITS

US Army Corps of Engineers New Orleans District

MARK	DESCRIPTION	DATE	APPR.

MARK	DESCRIPTION	DATE	APPR.

U. S. ARMY ENGINEER DISTRICT, NEW ORLEANS
CORPS OF ENGINEERS
NEW ORLEANS, LOUISIANA

DESIGNED BY: PSV
CHECKED BY: KMCL
DRAWN BY: KLH
DATE: 02-17-06

PLOT SCALE: 1=2
PLOT DATE: 02-17-06

DESIGN FILE NAME: J:/1404A/ELEC/E12
SUBMITTED BY: PAUL VLOSICH, DESIGN ENGINEER
SOLICITATION NO. - W912P8-06-B-0034

INNER HARBOR NAVIGATION CANAL
ORLEANS PARISH, LA.
IHNC GALLERY
LIGHTING/POWER PLAN

FILE NUMBER
E12
DWG. 14 OF 35

Safety is a Part of Your Contract

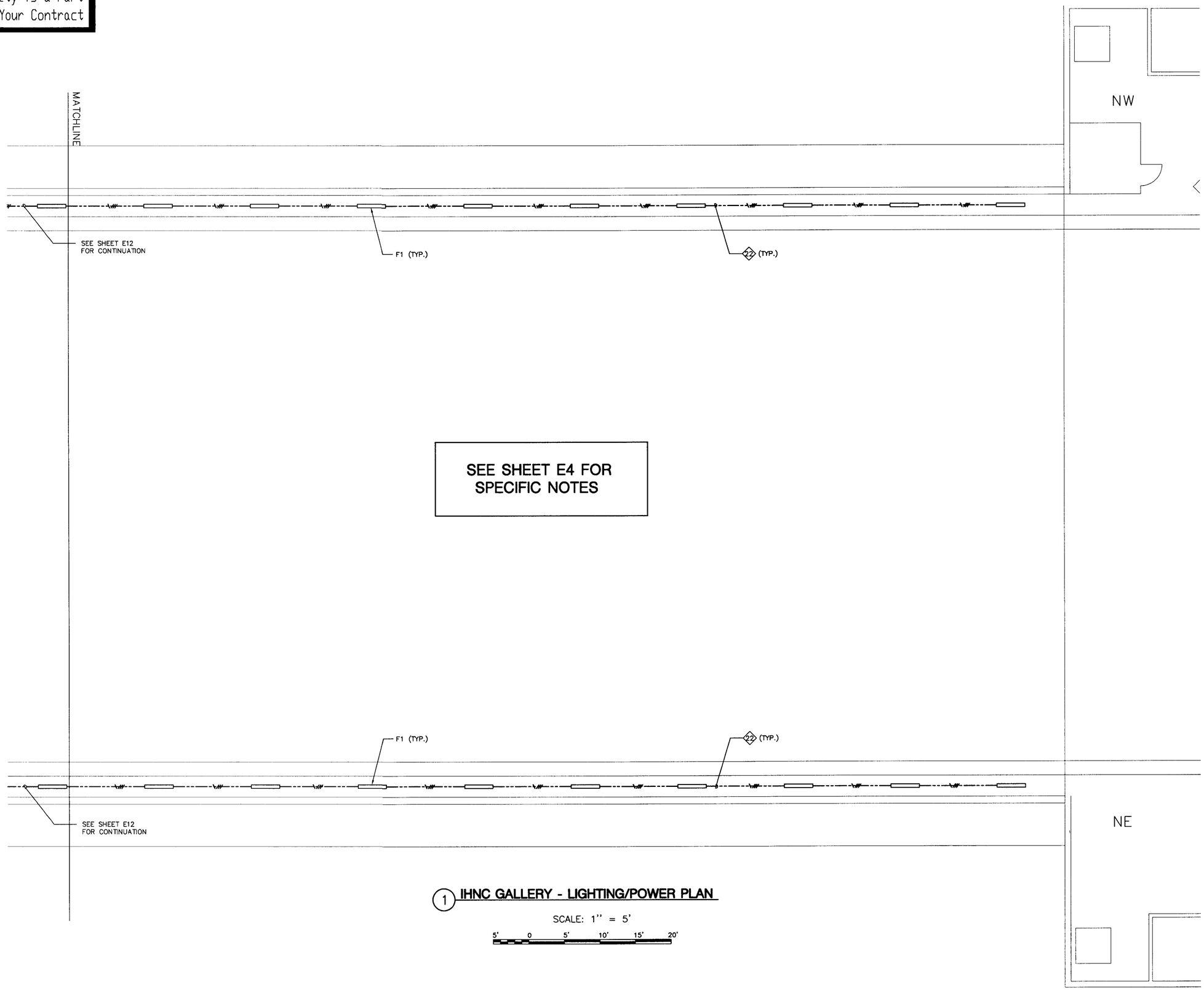

SEE SHEET E4 FOR SPECIFIC NOTES

1 IHNC GALLERY - LIGHTING/POWER PLAN

SCALE: 1" = 5'

5' 0 5' 10' 15' 20'

This drawing has been reduced to half size

VALUE INCENTIVE YOUR KEY TO HIGHER PROFITS SAVINGS ENGINEERING

© 2006 IMC 1404A
CONSULTING ENGINEERS
INC.
3120 20th STREET
METAIRIE, LOUISIANA 70002

US Army Corps of Engineers New Orleans District

MARK	DESCRIPTION	DATE	APPR.

MARK	DESCRIPTION	DATE	APPR.

U. S. ARMY ENGINEER DISTRICT, NEW ORLEANS
CORPS OF ENGINEERS
NEW ORLEANS, LOUISIANA

DESIGNED BY: PSV
CHECKED BY: KMCL
DRAWN BY: KLH
DATE: 02-17-06

PLOT SCALE: 1=2
PLOT DATE: 02-17-06

DESIGN FILE NAME: J:/1404A/ELEC/E13
SUBMITTED BY: PAUL VLOSICH - DESIGN ENGINEER
SOLICITATION NO. - W912P8-06-B-0034

INNER HARBOR NAVIGATION CANAL
ORLEANS PARISH, LA.
IHNC GALLERY
LIGHTING/POWER PLAN

FILE NUMBER
E13
DWG. 15 OF 35

Safety is a Part of Your Contract

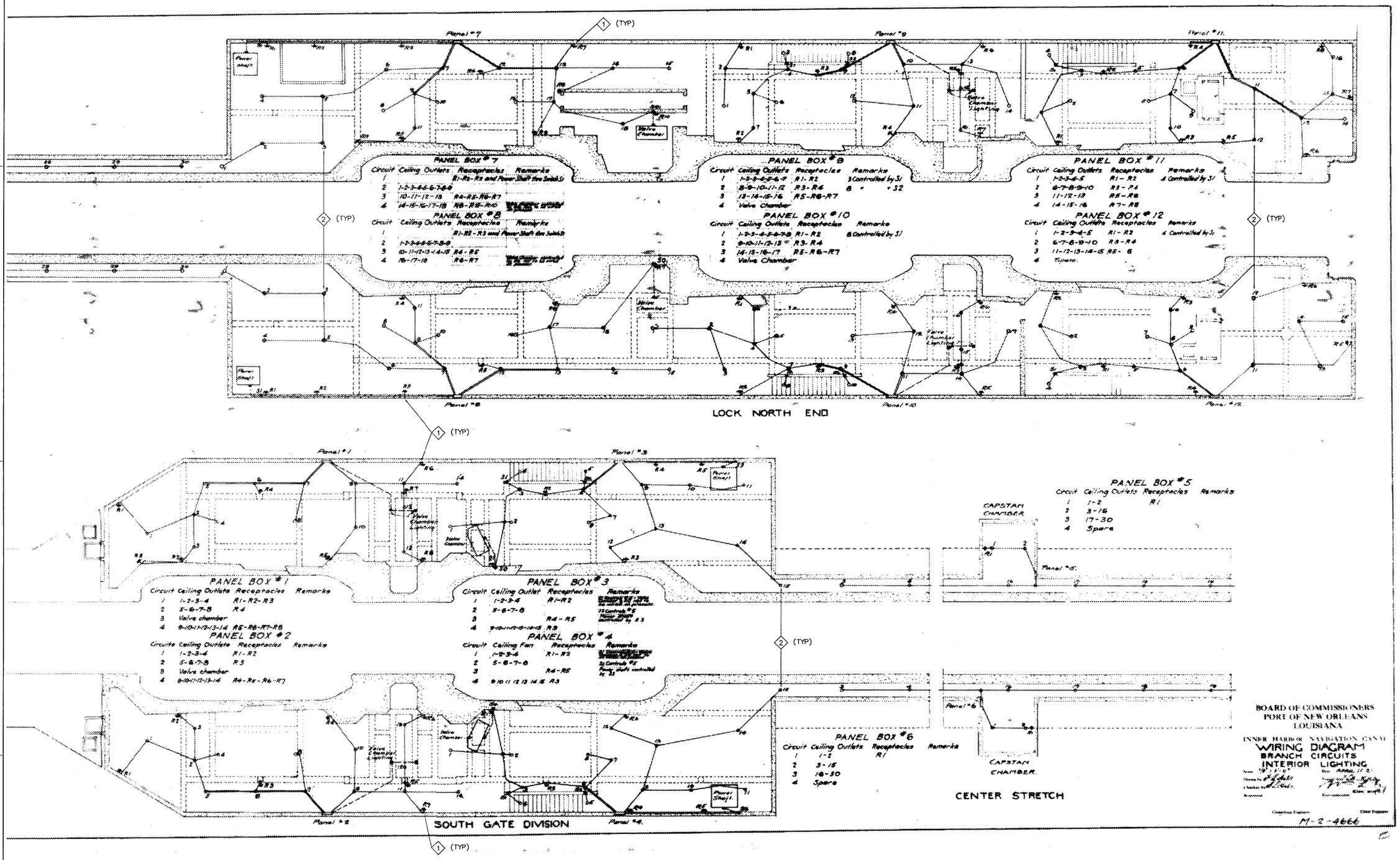

1 EXISTING MACHINERY ROOM - BRANCH CIRCUITS

SCALE: 1/8"= 1'-0"

8' 4' 0 8' 16'

SPECIFIC NOTES (EXISTING BRANCH CIRCUITS PLAN):

1. REMOVE EXISTING RECEPTACLE AND ASSOCIATED CLOTH-INSULATED CONDUCTORS ONCE NEW RECEPTACLES ARE INSTALLED AND TESTED. PROVIDE BLANK COVER PLATE FOR EXISTING CONCRETE-RECESSED BOX.
2. REMOVE EXISTING LIGHT FIXTURE AND ASSOCIATED CLOTH-INSULATED CONDUCTORS ONCE NEW FIXTURES ARE INSTALLED AND TESTED. PROVIDE BLANK COVER PLATE FOR EXISTING CONCRETE-RECESSED BOX

This drawing has been reduced to half size

VALUE INCENTIVE AWARDS ENGINEERING — CHECK YOUR HIGHER PROFITS

© 2006 IMC 1404A CONSULTING ENGINEERS INC. 3120 20th STREET METAIRIE, LOUISIANA 70002

US Army Corps of Engineers New Orleans District

MARK	DESCRIPTION	DATE	APPR.

U. S. ARMY ENGINEER DISTRICT, NEW ORLEANS
CORPS OF ENGINEERS
NEW ORLEANS, LOUISIANA

DESIGNED BY: PSV CHECKED BY: KMCL DRAWN BY: KLH DATE: 02-17-06
PLOT SCALE: 1=2 PLOT DATE: 02-17-06
DESIGN FILE NAME: J:/1404A/ELEC/E14
SUBMITTED BY: PAUL VLOSICH DESIGN ENGINEER
SOLICITATION NO. W912P8-06-B-0034

INNER HARBOR NAVIGATION CANAL
ORLEANS PARISH, LA.
EXISTING MACHINERY ROOM
BRANCH CIRCUITS

FILE NUMBER E14

DWG. 16 OF 35

Safety is a Part of Your Contract

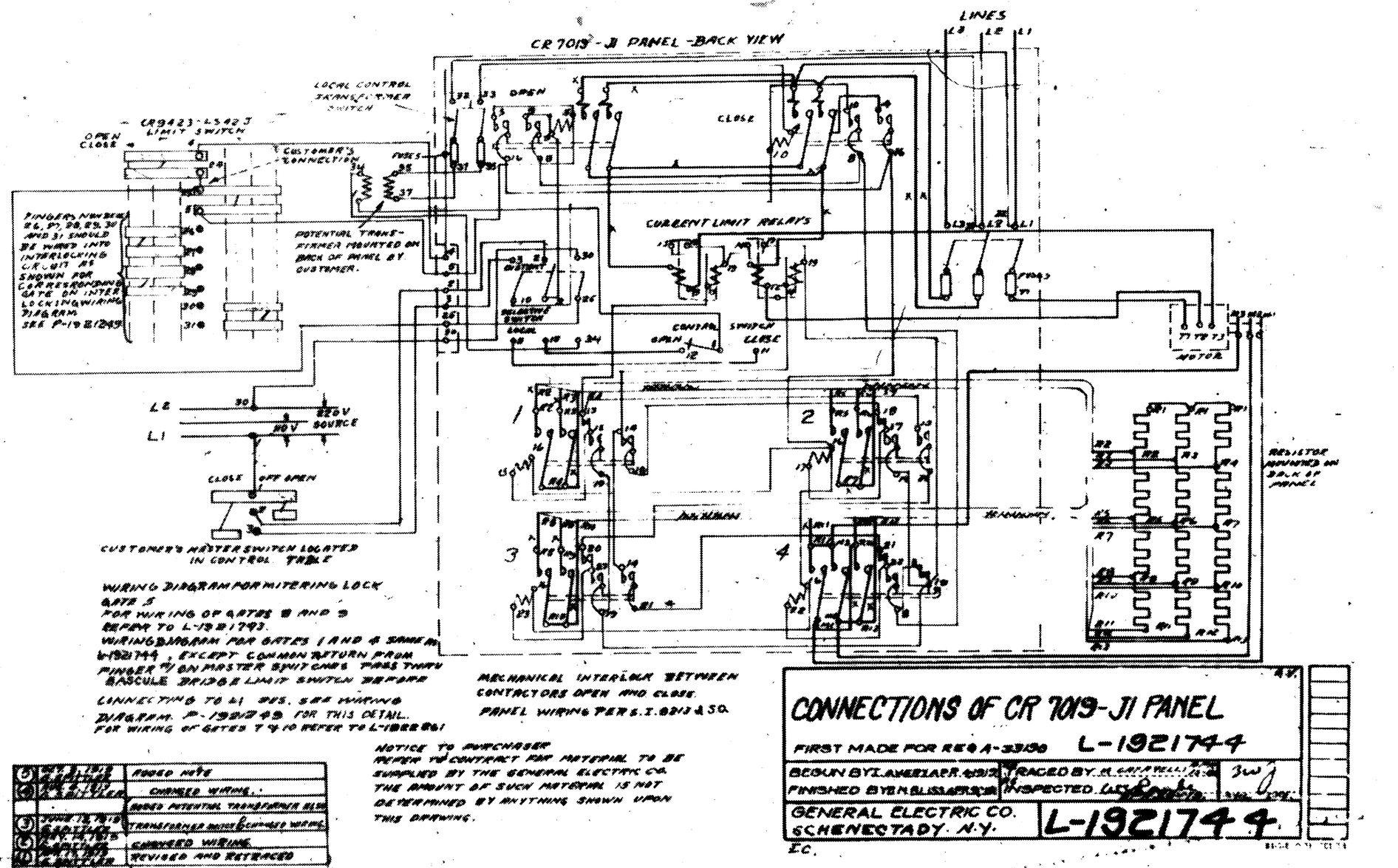

		FIXED NOTE
		CORRECT WIRING.
		ADDED POTENTIAL TRANSFORMER BLOCK
		TRANSFERRED MOTOR & CONTROL WIRING
		CORRECT WIRING
		REVISED AND RETRACED

L-1921744

1 ORIGINAL MITRE GATE MOTOR CONTROL DIAGRAM

SCALE: NONE (GATES: 1, 4, 5)

This drawing has been reduced to half size

© 2006 IMC 14144A CONSULTING ENGINEERS INC. 3120 21th STREET METAIRIE, LOUISIANA 70002

U. S. ARMY ENGINEER DISTRICT, NEW ORLEANS
CORPS OF ENGINEERS
NEW ORLEANS, LOUISIANA

DESIGNED BY: PSV
DRAWN BY: KWCL
CHECKED BY: KLH
DATE: 02-17-06

PLOT DATE
SCALE: 1=2
DESIGN FILE NAME: /1404A/ELEC15
SCREWING BY: CROSCH
DESIGN ENGINEER
SOLICITATION NO. W912P8-06-B-0034
02-17-06

INNER HARBOR NAVIGATION CANAL
ORLEANS PARISH, LA.

ORIGINAL MITRE GATE
MOTOR CONTROL DIAGRAM

FILE NUMBER
E15

DWG 17 OF 35

Safety is a Part of Your Contract

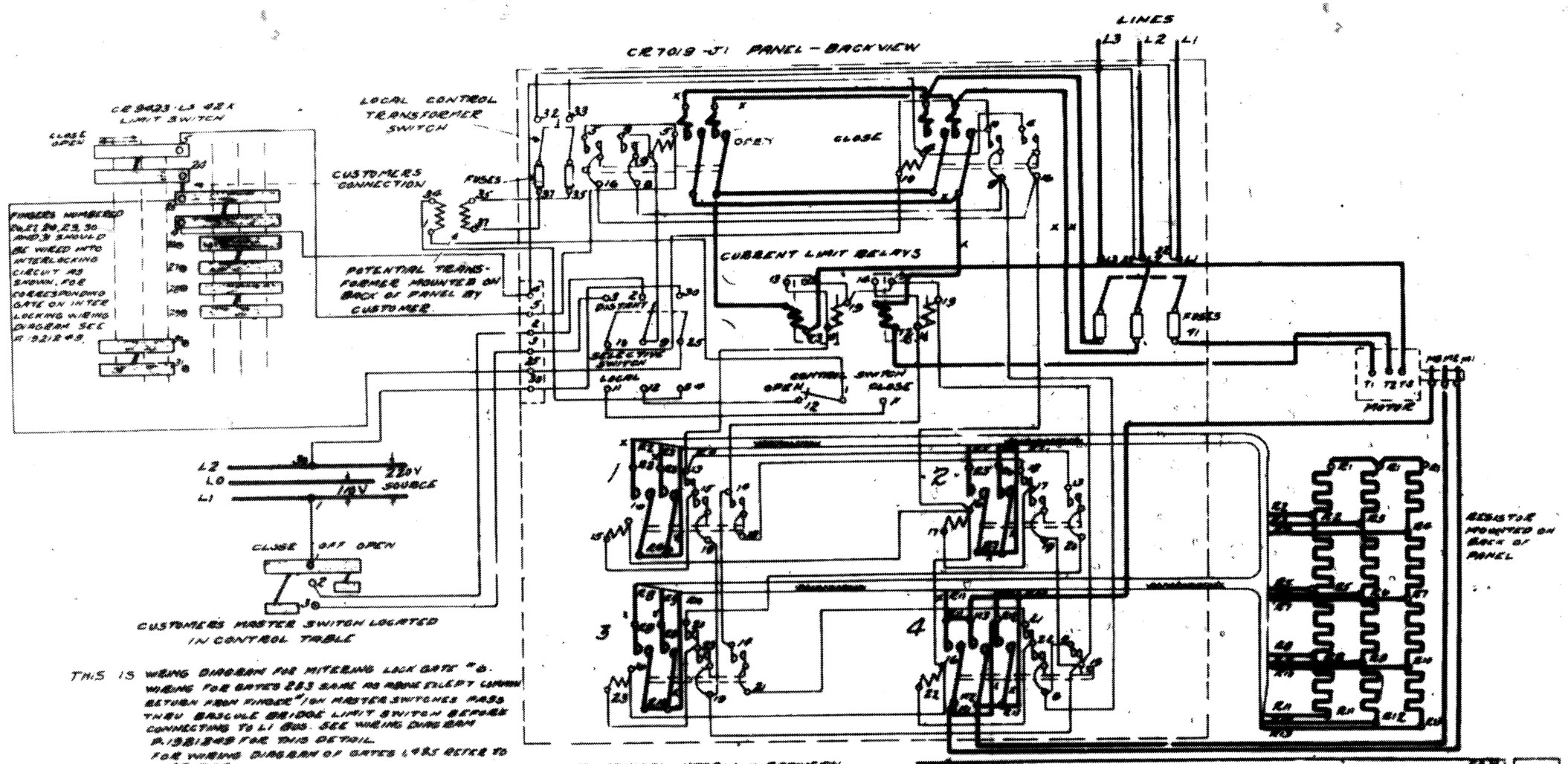

THIS IS WIRING DIAGRAM FOR MITERING LOCK GATE "B". WIRING FOR GATES 2&3 SAME AS MONE EXCEPT CONNECTION FROM FINGER "I" ON MASTER SWITCHES PASS THRU BASCULE BRIDGE LIMIT SWITCH BEFORE CONNECTING TO L1 BUS. SEE WIRING DIAGRAM P.1921348 FOR THIS DETAIL.
FOR WIRING DIAGRAM OF GATES 1&5 REFER TO L-1921760.
FOR WIRING OF GATES 7&11 REFER TO L-1922264.
FOR WIRING OF GATES 8&9 REFER TO L-1921743.

NOTICE TO PURCHASER
REFER TO CONTRACT FOR MATERIAL TO BE SUPPLIED BY THE GENERAL ELECTRIC CO. THE AMOUNT OF SUCH MATERIAL IS NOT INCREASED BY ANYTHING SHOWN UPON THIS DRAWING.

CONNECTIONS OF CR7019-J1 PANEL

FIRST MADE FOR ECG A-38130 L-1922260

BEGUN BY W. EDWARDS, SEPT. 20
FINISHED BY H. DONNEBERGER
TRACED BY E. & MARY MCTAFF
INSPECTED R.B. QUINTERO

GENERAL ELECTRIC CO.
SCHENECTADY, N.Y.
L-1922260

L-1922260

1 ORIGINAL MITRE GATE MOTOR CONTROL DIAGRAM
SCALE: NONE (GATES: 2, 3, 6)

This drawing has been reduced to half size

© 2006 IMC 1404A CONSULTING ENGINEERS INC. 3120 20th STREET METAIRIE, LOUISIANA 70002

US Army Corps of Engineers New Orleans District

MARK	DESCRIPTION	DATE	APPR.	MARK	DESCRIPTION	DATE	APPR.

U. S. ARMY ENGINEER DISTRICT, NEW ORLEANS
CORPS OF ENGINEERS
NEW ORLEANS, LOUISIANA

DESIGNED BY: PSV
CHECKED BY: KMCL
DRAWN BY: KLH
DATE: 02-17-06
PLOT SCALE: 1=2
PLOT DATE: 02-17-06
DESIGN FILE NAME: U:/404AV/ELEC/E16
SUBMITTED BY: V. LOSICH
DESIGN ENGINEER
SOLICITATION NO. W912P8-06-B-0034

INNER HARBOR NAVIGATION CANAL
ORLEANS PARISH, LA.

ORIGINAL MITRE GATE
MOTOR CONTROL DIAGRAM

FILE NUMBER
E16
DWG. 18 OF 35

Safety is a Part of Your Contract

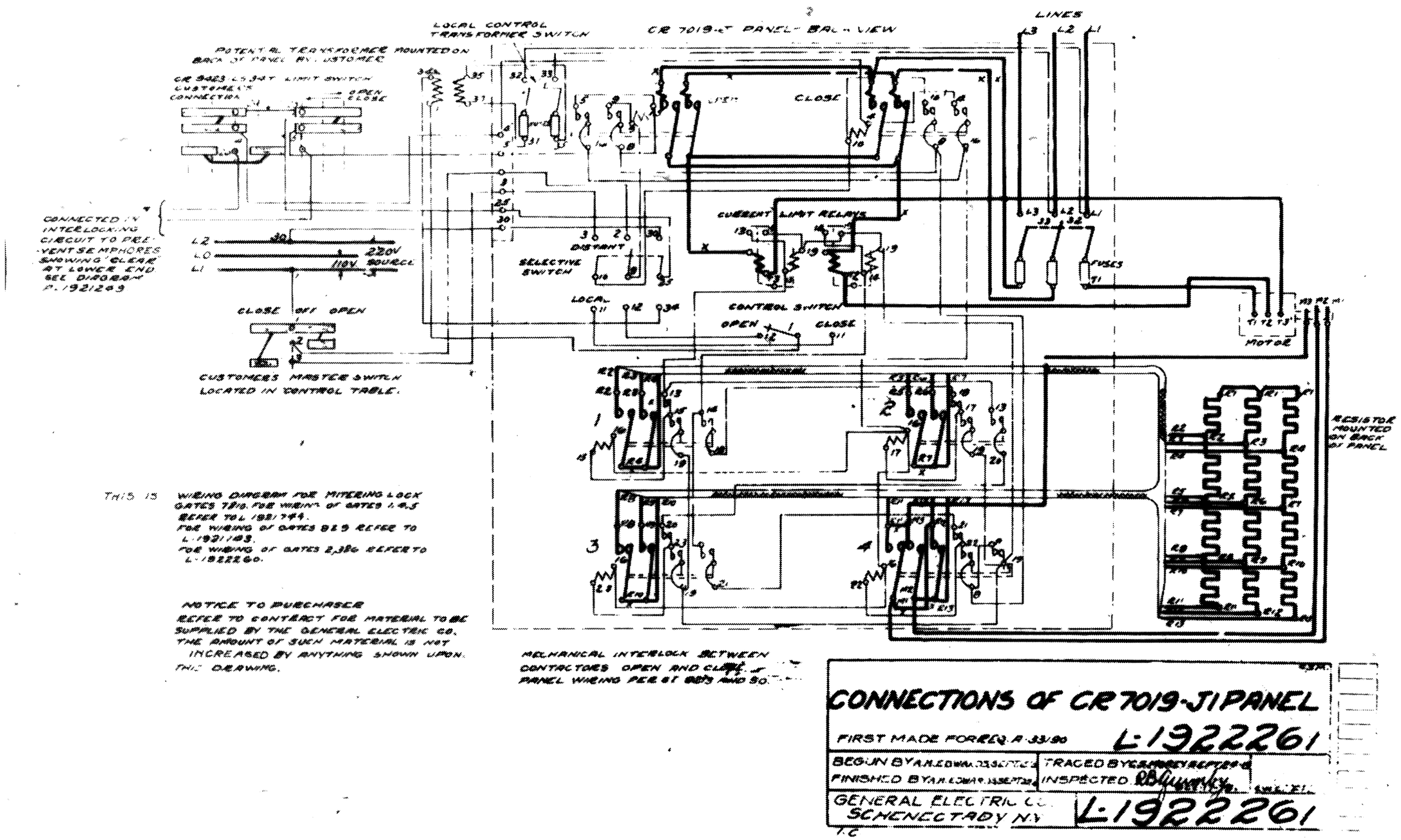

THIS IS WIRING DIAGRAM FOR MITERING LOCK GATES 7 & 10. FOR WIRING OF GATES 1, 4, 5 REFER TO L-1921744.
FOR WIRING OF GATES 8 & 9 REFER TO L-1921143.
FOR WIRING OF GATES 2, 3 & 6 REFER TO L-1922260.

NOTICE TO PURCHASER
REFER TO CONTRACT FOR MATERIAL TO BE SUPPLIED BY THE GENERAL ELECTRIC CO. THE AMOUNT OF SUCH MATERIAL IS NOT INCREASED BY ANYTHING SHOWN UPON THIS DRAWING.

MECHANICAL INTERLOCK BETWEEN CONTACTORS OPEN AND CLOSE IN PANEL WIRING PER 61 & 50.

CONNECTIONS OF CR 7019-J PANEL

FIRST MADE FOR REQ. A-33/90 L-1922261

BEGUN BY A.H.E. DWG. 23 SEPT 26 | TRACED BY G. SANDERS SEPT 26
FINISHED BY A.H.E. DWG. 23 SEPT 26 | INSPECTED R.B. Lumley

GENERAL ELECTRIC CO. SCHENECTADY N.Y. | L-1922261

T.C.

L-1922261

1 ORIGINAL MITRE GATE MOTOR CONTROL DIAGRAM
SCALE: NONE (GATES: 7,10)

This drawing has been reduced to half size

© 2006 IMC 1404A CONSULTING ENGINEERS INC. 3120 20th STREET METAIRIE, LOUISIANA 70002

US Army Corps of Engineers New Orleans District

MARK	DESCRIPTION	DATE	APPR.	MARK	DESCRIPTION	DATE	APPR.

U. S. ARMY ENGINEER DISTRICT, NEW ORLEANS
CORPS OF ENGINEERS
NEW ORLEANS, LOUISIANA

DESIGNED BY: PSV	PLOT SCALE: 1=2	PLOT DATE: 02-17-06	DESIGN FILE NAME: J:/1404A/ELEC/E17	SOLICITATION NO. -W912PB-06-B-0034
CHECKED BY: KWCL			SUBMITTED BY: PAUL VLOSICH DESIGN ENGINEER	
DRAWN BY: KLH				
DATE: 02-17-06				

INNER HARBOR NAVIGATION CANAL
ORLEANS PARISH, LA.
ORIGINAL MITRE GATE
MOTOR CONTROL DIAGRAM

FILE NUMBER E17
DWG. 19 OF 35

Safety is a Part of Your Contract

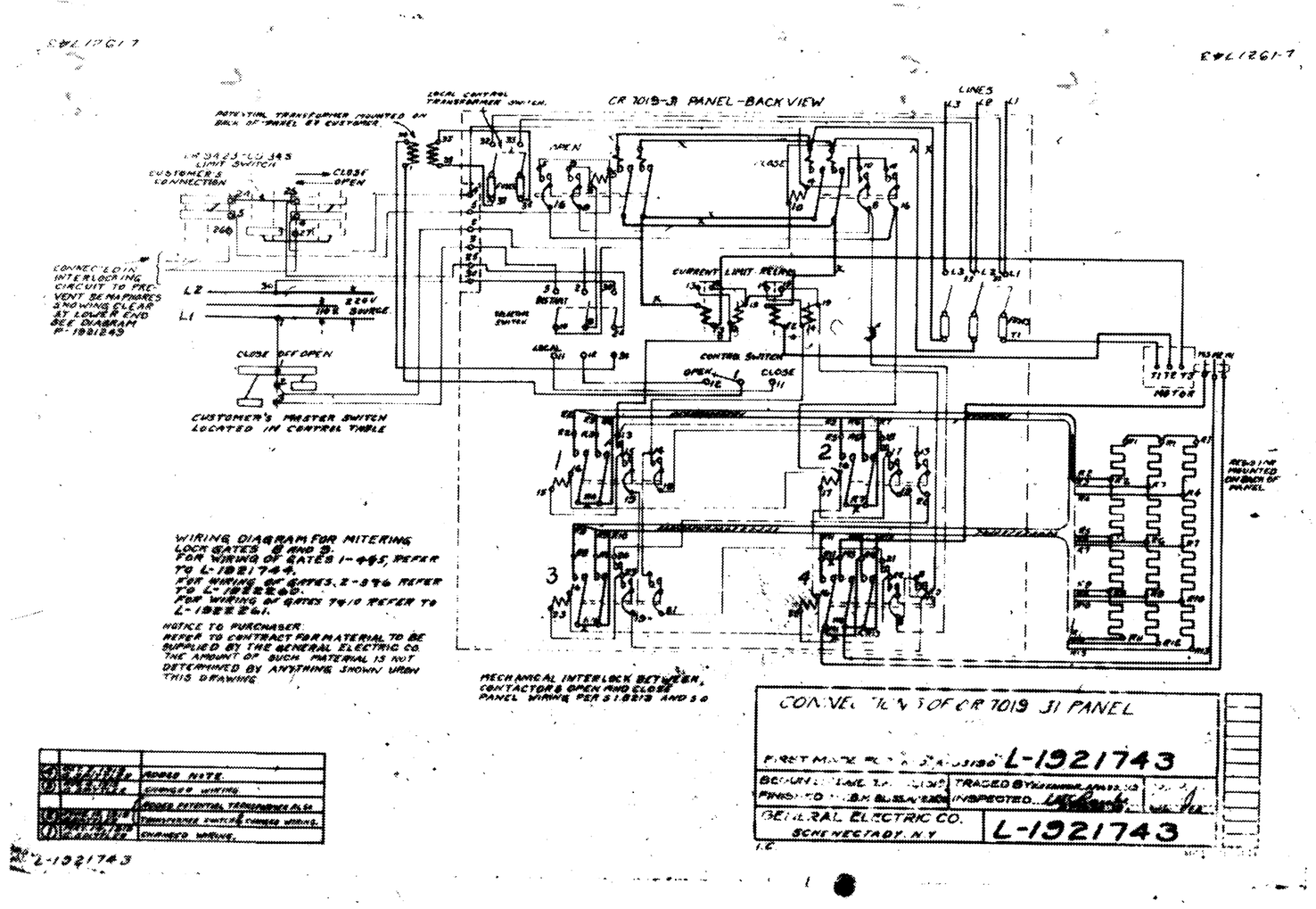

1 **ORIGINAL MITRE GATE MOTOR CONTROL DIAGRAM**

SCALE: NONE (GATES: 8, 9)

This drawing has been reduced to half size

U. S. ARMY ENGINEER DISTRICT, NEW ORLEANS
CORPS OF ENGINEERS
NEW ORLEANS, LOUISIANA

DESIGNED BY: PSV
CHECKED BY: KMCL
DRAWN BY: KLLM
DATE: 02-17-06

PLOT SCALE: 1=2
PLOT DATE: 02-17-06

DESIGN FILE NAME: J:/1404A/ELEC/EI8
SUBMITTED BY: PAUL VLOSICH, DESIGN ENGINEER
SOLICITATION NO.: - W912PB-06-B-0034

INNER HARBOR NAVIGATION CANAL
ORLEANS PARISH, LA.

ORIGINAL MITRE GATE
MOTOR CONTROL DIAGRAM

FILE NUMBER
EI8

DWG 20 OF 35

© 2006 IMC 1404A
CONSULTING ENGINEERS
INC.
3120 20th STREET
METAIRIE, LOUISIANA 70002

Safety is a Part of Your Contract

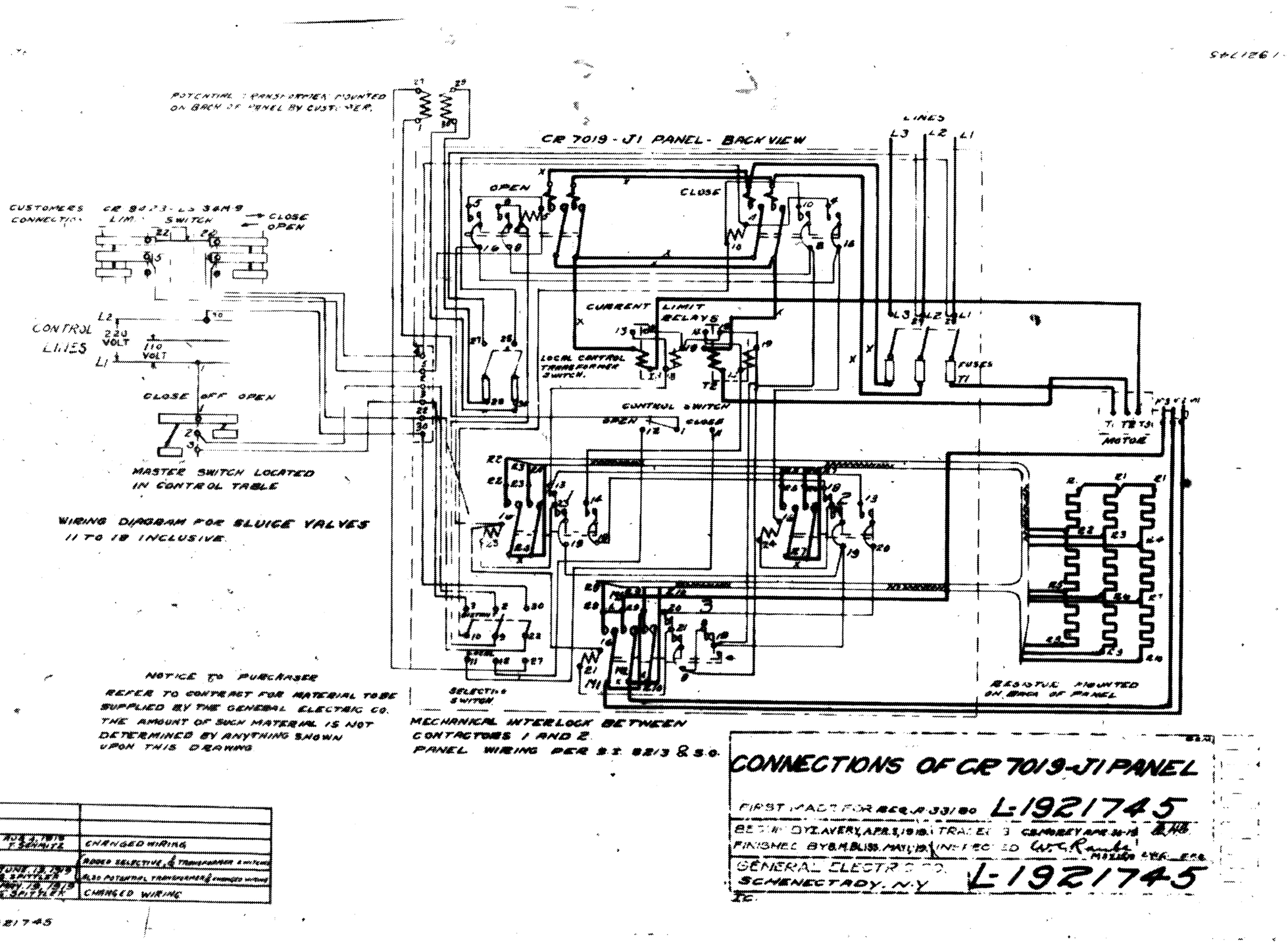

1 ORIGINAL SLUICE VALVE MOTOR CONTROL DIAGRAM
SCALE: NONE

This drawing has been reduced to half size

© 2006 IMC 1404A
CONSULTING ENGINEERS INC.
3120 20th STREET
METAIRIE, LOUISIANA 70002

US Army Corps of Engineers New Orleans District

MARK	DESCRIPTION	DATE	APPR

U. S. ARMY ENGINEER DISTRICT, NEW ORLEANS
CORPS OF ENGINEERS
NEW ORLEANS, LOUISIANA

DESIGNED BY: PSV
CHECKED BY: KMCL
DRAWN BY: KLH
DATE: 02-17-06
PLOT SCALE: 1=2
PLOT DATE: 02-17-06
DESIGN FILE NAME: J:/1404A/ELEC/E19
SUBMITTED BY: PAUL VLOSICH
DESIGN ENGINEER
SOLICITATION NO. W912P8-06-B-0034

INNER HARBOR NAVIGATION CANAL
ORLEANS PARISH, LA.

ORIGINAL SLUICE VALVE MOTOR CONTROL DIAGRAM

FILE NUMBER E19
DWG. 21 OF 35

Safety is a Part of Your Contract

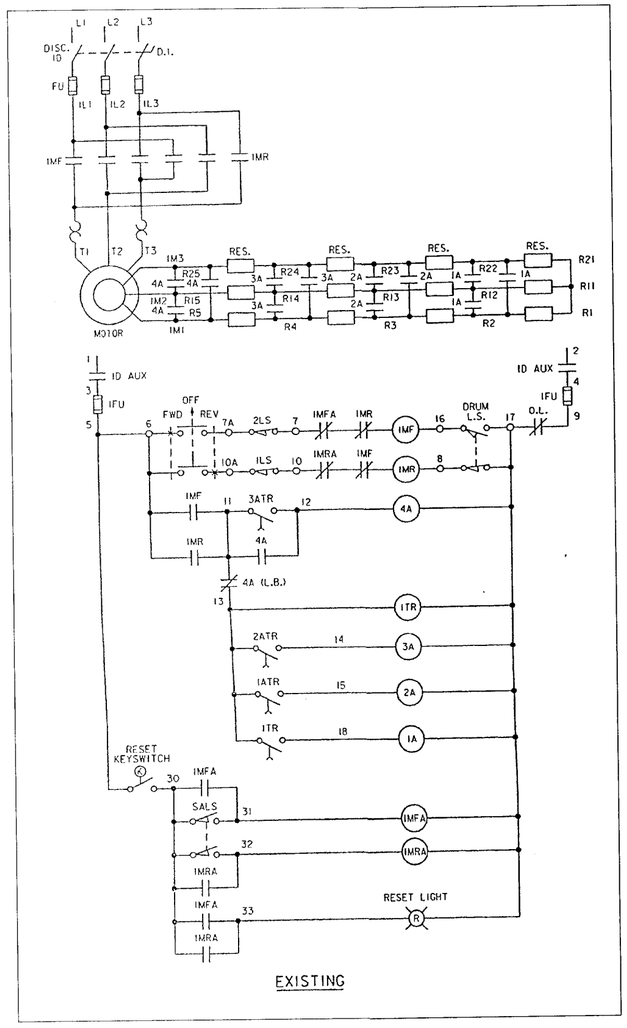

1 **MITER GATE MOTOR CONTROL SCHEMATIC**
SCALE: NONE

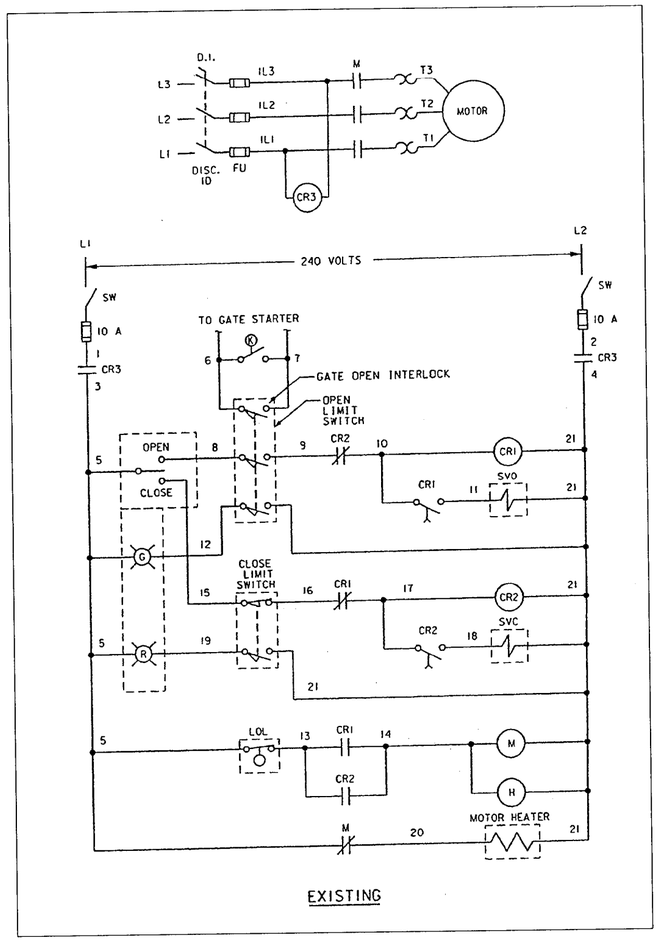

2 **HYDRAULIC VALVE MOTOR CONTROL SCHEMATIC**
SCALE: NONE

INFORMATION TAKEN FROM FIELD:

CONTACTOR	CONTACT RATING	COIL RATING	COIL #	CAT # (ALLEN BRADLEY)
1A	45A	220V	AB 72A755	X-247574
2A	45A	220V	AB 72A755	X-247574
3A	45A	220V	AB 72A755	X-247574
4A	?	220V	AB 73A06	X-234075

This drawing has been reduced to half size

© 2006 IMC 1404A CONSULTING ENGINEERS INC
3120 20th STREET
METAIRIE, LOUISIANA 70002

US Army Corps of Engineers New Orleans District

MARK	DESCRIPTION	DATE	APPR.

U. S. ARMY ENGINEER DISTRICT, NEW ORLEANS
CORPS OF ENGINEERS
NEW ORLEANS, LOUISIANA

DESIGNED BY: PSV
CHECKED BY: KWCL
DRAWN BY: KLH
DATE: 02-17-06
PLOT SCALE: 1=2
PLOT DATE: 02-17-06
DESIGN FILE NAME: J:/1404A/ELEC/E20
SOLICITATION NO. W912P8-06-B-0034
SUBMITTED BY: PAUL V. LOSICH
DESIGN ENGINEER

INNER HARBOR NAVIGATION CANAL
ORLEANS PARISH, LA.
EXISTING
MOTOR CONTROL SCHEMATICS

FILE NUMBER E20
DWG. 22 OF 35

Safety is a Part of Your Contract

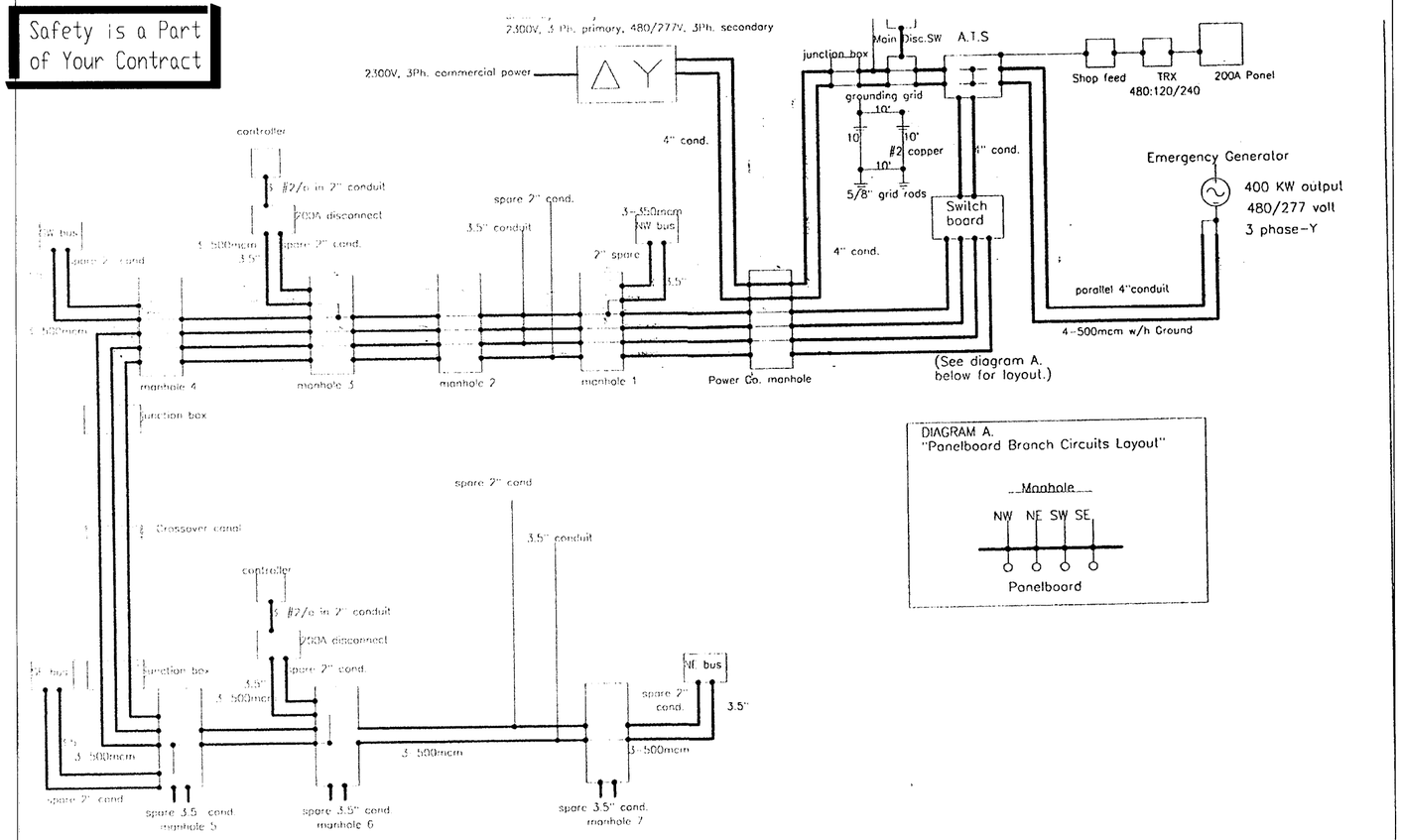

DIAGRAM A.
"Panelboard Branch Circuits Layout"

NOTES:

1. Each manhole has two 3.5" spares on outside wall.
2. Branch Motor Feeders are straight 3 with 480 V.

Page Size: 11 x 14

Army Corps of Engineers
P.O. Box 60267
New Orleans, LA 70160-0267
(504) 862-2382

Industrial Canal Lock One-Line Diagram

Revision: Jonathan Pollet July 19, 1996 Page 1 of 1

1 SITE ELECTRICAL "AS-BUILT" MAIN ELECTRICAL ONE-LINE DIAGRAM

SCALE: NONE

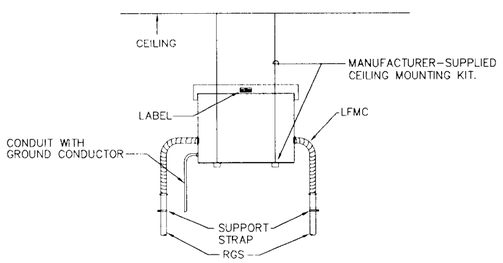

2 TRANSFORMER CEILING MOUNTING DETAIL

SCALE: NONE

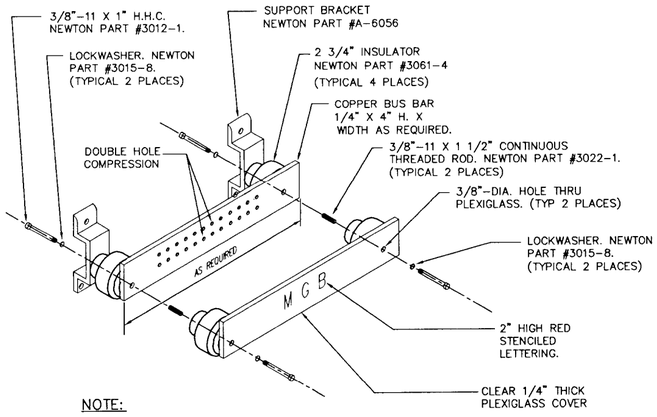

NOTE:

1. BUS BARS OVER 20" IN LENGTH REQUIRE A MINIMUM OF ONE ADDITIONAL 2 3/4" INSULATOR AND SUPPORT BRACKET. DO NOT EXCEED 12" BETWEEN BRACKET/ISOLATORS.
2. PROVIDE PLASTIC LAMINATE LABEL FOR EACH GROUND CONDUCTOR. MOUNT LABEL ABOVE COMPRESSION ON GROUND BUS.

3 GROUNDING BUS BAR DETAIL

SCALE: NONE

NOTE:

MOUNT ALL COMPONENTS INSIDE OF A NEMA 4X STAINLESS STEEL ENCLOSURE.

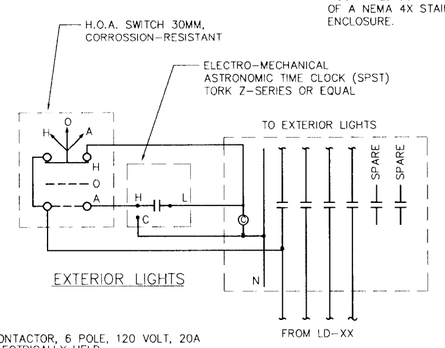

4 LIGHTING CONTROLS

SPECIFIC NOTES (EXISTING ONE-LINE):

1. WOUND ROTOR INDUCTION MOTOR EXTERNAL RESISTANCE BANK.
2. FOR CONNECTION OF EXTERNAL RESISTANCE BANK TO SECONDARY WINDING OF MOTOR.
3. 2-POLE, SINGLE PHASE, FUSED DISCONNECT SWITCH.
4. 480:240/120-VOLT, 1-PHASE, 3-WIRE TRANSFORMER.
5. 480 DELTA TO 208Y/120, 3-PHASE, 4-WIRE TRANSFORMER.
6. 3-POLE FUSED DISCONNECT SWITCH.
7. EXISTING FEEDER TO DRAW BRIDGE TO REMAIN. FEEDER IS CURRENTLY DISCONNECTED FROM THE DRAW BRIDGE AT THE BRIDGE CONTROL HOUSE, AND THE ST. CLAUDE BRIDGE IS POWERED BY UTILITY ONLY.
8. REPLACE EXISTING 800-AMP CIRCUIT BREAKER WITH A 600-AMP BREAKER.
9. EXISTING FEEDER TO REMAIN.
10. RETROFIT EXISTING CUTLER HAMMER, POWERLINE C SWITCHBOARD WITH A TVSS HAVING A MINIMUM PEAK SURGE CURRENT RATING (MPSC) OF 240kA.
11. REMOVE OR ABANDON EXISTING EQUIPMENT (BUS, DISCONNECT SWITCH, TRANSFORMER, PANEL, ETC.) AS INDICATED ON THE MACHINERY ROOM PLANS ONCE ALL LOADS HAVE BEEN TRANSFERRED.
12. REMOVE OR ABANDON EXISTING CONDUCTORS AND CONDUIT AS NOTED ON THE MACHINERY PLANS. CONDUITS EMBEDDED IN CONCRETE SHALL BE ABANDONED.
13. EXISTING CONDUIT AND CONDUCTORS TO BE REPLACED AS INDICATED ON THE REVISED ONE-LINE AND ON THE MACHINERY ROOM PLANS.
14. EXISTING EQUIPMENT (TRANSFORMERS, PANELS, CONTROLLERS, DISCONNECT SWITCHES, ETC.) TO BE REPLACED AS INDICATED ON THE REVISED ONE-LINE AND THE MACHINERY ROOM PLANS.

SPECIFIC NOTES (REVISED ONE-LINE):

1. NEW, CUSTOM, COMBINATION (CIRCUIT BREAKER TYPE) DISCONNECT SWITCH / MOTOR CONTROLLER FOR GATE MOTOR. CIRCUIT BREAKER FOR MOTOR PRIMARY SHALL BE 125-AMPS. CIRCUIT BREAKER FOR MOTOR SECONDARY SHALL BE 175-AMPS. SEE MACHINERY ROOM PLANS.
2. NEW MINI-POWER CENTER. SEE MACHINERY ROOM PLANS AND PANEL SCHEDULE.
3. PROVIDE NEMA 4X STAINLESS STEEL ENCLOSURE WITH ASTRONOMICAL TIME CLOCK AND LIGHTING CONTACTOR PER THE EXTERIOR LIGHTING CONTROL DETAIL. PROVIDE HAND-OFF-AUTOMATIC SWITCH INSIDE OF THE ENCLOSURE. SWITCH SHALL BE HEAVY-DUTY, 30mm, CORROSION-RESISTANT 3-POSITION SELECTOR SWITCH WITH ROTARY KNOB.
4. TRACE EXISTING CIRCUIT. RECONNECT EXISTING CIRCUIT AS SHOWN. ROUTE THROUGH LCP IF CIRCUIT IS FOR EXISTING EXTERIOR LIGHTING TO REMAIN.
5. "XX/YY" = SWITCH RATING / FUSE RATING
6. PROVIDE NEW STAINLESS STEEL, FUSED DISCONNECT SWITCH.
7. NEW COMBINATION (CIRCUIT BREAKER TYPE) DISCONNECT SWITCH / MOTOR CONTROLLER FOR HYDRAULIC VALVE MOTOR. CIRCUIT BREAKER FOR MOTOR SHALL BE 50-AMPS. SEE MACHINERY ROOM PLANS.
8. RE-USE EXISTING CONDUIT AND CONDUCTORS FROM MACHINERY ROOM TO BRIDGE HOUSE.
9. ROUTE NEW CONDUIT AND CONDUCTORS FROM EXISTING PULL BOX / JUNCTION BOX TO NEW MANUAL TRANSFER SWITCH.
10. REPLACE EXISTING 400-AMP, MAIN DISCONNECT SWITCH WITH A NEW, 400-AMP NON-AUTOMATIC, CIRCUIT BREAKER TYPE TRANSFER SWITCH IN NEMA 1 ENCLOSURE. PROVIDE AUX CONTACT IN TRANSFER SWITCH THAT CLOSES WHEN CONNECTED TO THE SECONDARY SOURCE. TRANSFER SWITCH SHALL BE SERVICE ENTRANCE RATED. TRANSFER SWITCH SHALL HAVE MAX WIDTH OF 26-INCHES. FIELD VERIFY DIMENSIONS PRIOR TO PURCHASE AND INSTALLATION. SWITCH SHALL BE EQUAL TO CUTLER HAMMER NTVS SERIES.
11. RECONNECT EXISTING UTILITY SERVICE AND EXISTING LOAD. COORDINATE OUTAGES WITH THE CORPS OF ENGINEERS, THE PORT OF NEW ORLEANS, AND ENTERGY.

FEEDER SCHEDULE
(TYPICAL SCHEDULE - NOT ALL LABELS ARE NECESSARILY USED.)

LABEL	NO.	SIZE	GND.	CONDUIT
A	3	#12	#12	1/2"
A1	4	#12	#12	1/2"
B	3	#10	#10	3/4"
B1	4	#10	#10	3/4"
C	3	#8	#10	1"
C1	4	#8	#10	1"
D	3	#6	#8	1"
D1	4	#6	#8	1"
E	3	#4	#8	1-1/4"
E1	4	#4	#8	1-1/4"
F	3	#3	#8	1-1/4"
F1	4	#3	#8	1-1/4"
G	3	#2	#6	1-1/4"
G1	4	#2	#6	1-1/4"
H	3	#1	#6	1-1/2"
H1	4	#1	#6	1-1/2"
I	3	#1/0	#6	1-1/2"
I1	4	#1/0	#6	1-1/2"
J	3	#2/0	#6	2"
J1	4	#2/0	#6	2"
K	3	#3/0	#6	2"
K1	4	#3/0	#6	2"
L	3	#4/0	#4	2"
L1	4	#4/0	#4	2-1/2"
M	3	#250 MCM	#4	2-1/2"
M1	4	#250 MCM	#4	2-1/2"
N	3	#350 MCM	#3	3"
N1	4	#350 MCM	#3	3"
O	3	#500 MCM	#3	3-1/2"
O1	4	#500 MCM	#3	3-1/2"
P	(2)3	#350 MCM	#1	3"(2 SETS)
P1	(2)4	#350 MCM	#1	3"(2SETS)
R	(2)3	#500 MCM	#1/0	4"(2 SETS)
R1	(2)4	#500 MCM	#1/0	4"(2 SETS)
S	(3)3	#350 MCM	#2/0	3"(3 SETS)
S1	(3)4	#350 MCM	#2/0	3"(3 SETS)
T	(3)3	#500 MCM	#2/0	4"(3 SETS)
T1	(3)4	#500 MCM	#2/0	4"(3 SETS)
U	(2)3	#600 MCM	#3/0	4"(2 SETS)
U1	(2)4	#600 MCM	#3/0	4"(2 SETS)
V	(3)3	#600 MCM	#3/0	4"(3 SETS)
V1	(3)4	#600 MCM	#3/0	4"(3 SETS)
W1	(4)4	#600 MCM	#3/0	4"(4 SETS)
Y1	(5)4	#600 MCM	#3/0	4"(5 SETS)
Z1	4	#600 MCM	#3/0	4"
XX	SEE DRY TRANSFORMER SCHEDULE			

This drawing has been reduced to half size

© 2006 IMC 1404A CONSULTING ENGINEERS INC. 3120 20th STREET METAIRIE, LOUISIANA 70002

US Army Corps of Engineers New Orleans District

MARK	DESCRIPTION	APPR.	DATE

MARK	DESCRIPTION	APPR.	DATE

U. S. ARMY ENGINEER DISTRICT, NEW ORLEANS
CORPS OF ENGINEERS
NEW ORLEANS, LOUISIANA

DESIGNED BY: PSV
CHECKED BY: KMCL
DRAWN BY: KLH
DATE: 02-17-06
PLOT SCALE: 1=2
PLOT DATE: 02-17-06
DESIGN FILE NAME: J:/1404A/ELEC/E21
SUBMITTED BY: PAUL VLOSICH, DESIGN ENGINEER
SOLICITATION NO.: W912P8-06-B-0034

INNER HARBOR NAVIGATION CANAL
ORLEANS PARISH, LA.
EXISTING
MAIN ELECTRICAL ONE-LINE

FILE NUMBER E21
DWG. 23 OF 35

Safety is a Part of Your Contract

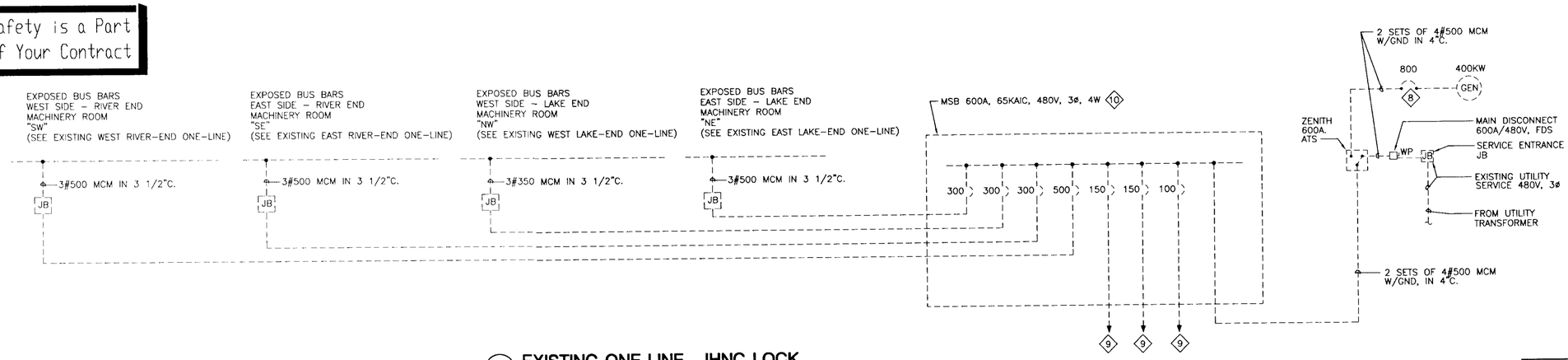

1 EXISTING ONE-LINE - IHNC LOCK
SCALE: NONE

SEE SHEET E21 FOR SPECIFIC NOTES

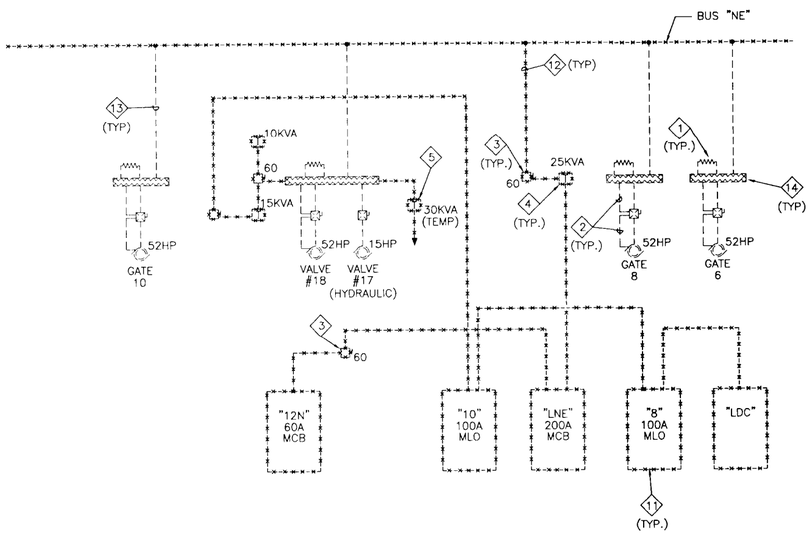

2 EXISTING ONE-LINE (EAST LAKE-END)
SCALE: NONE

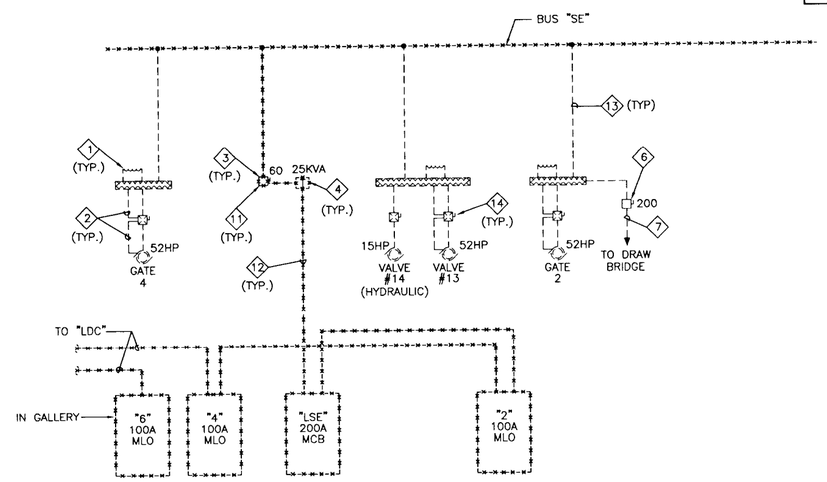

3 EXISTING ONE-LINE (EAST RIVER-END AND GALLERY)
SCALE: NONE

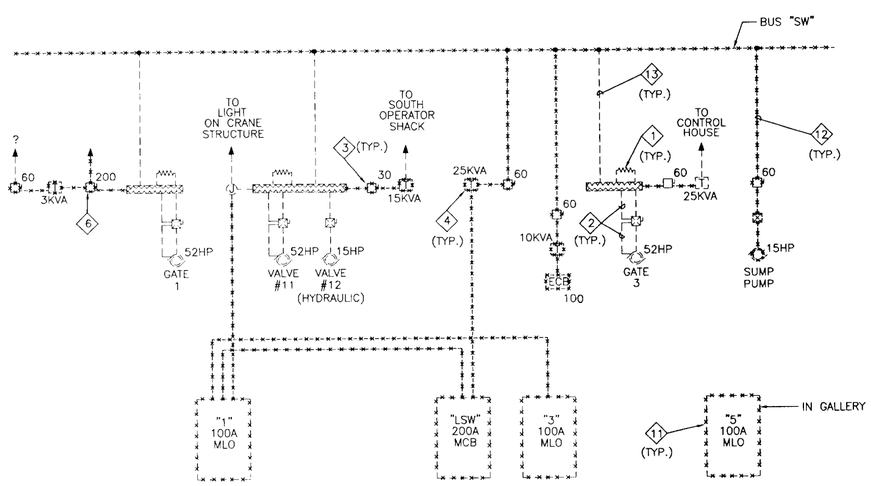

4 EXISTING ONE-LINE (WEST RIVER-END AND GALLERY)
SCALE: NONE

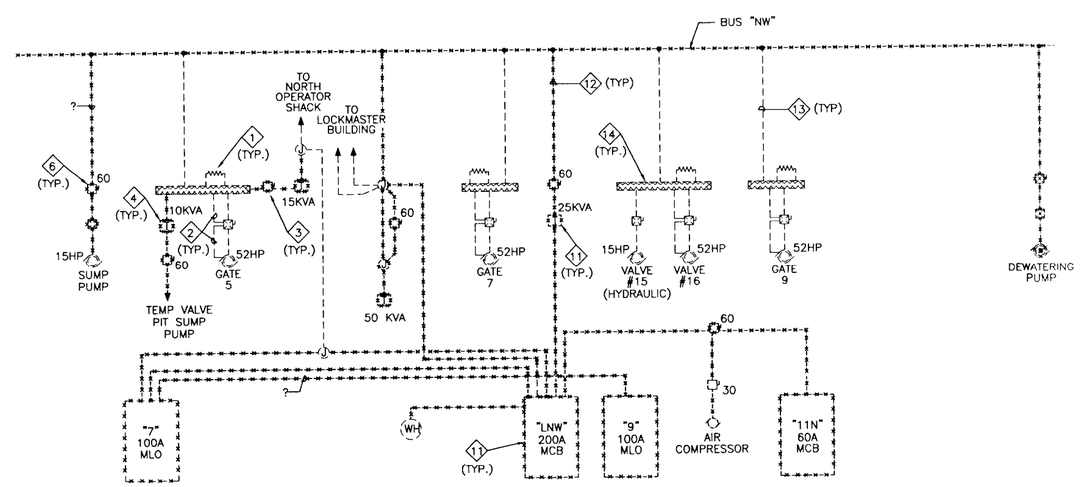

5 EXISTING ONE-LINE (WEST LAKE-END)
SCALE: NONE

This drawing has been reduced to half size

© 2006 IMC CONSULTING ENGINEERS INC. 3120 20th STREET METAIRIE, LOUISIANA 70002

US Army Corps of Engineers New Orleans District

MARK	DESCRIPTION	DATE	APPR.	MARK	DESCRIPTION	DATE	APPR.

U. S. ARMY ENGINEER DISTRICT, NEW ORLEANS
CORPS OF ENGINEERS
NEW ORLEANS, LOUISIANA

DESIGNED BY: PSV
CHECKED BY: KMCL
DRAWN BY: KLH
DATE: 02-17-06
PLOT SCALE: 1=2
PLOT DATE: 02-17-06
DESIGN FILE NAME: J:/1404A/ELEC/E22
SUBMITTED BY: PAUL VLOSICH
DESIGN ENGINEER
SOLICITATION NO. W912P8-06-B-0034

INNER HARBOR NAVIGATION CANAL
ORLEANS PARISH, LA.
EXISTING ELECTRICAL SYSTEM
ONE-LINE DIAGRAMS

FILE NUMBER E22
DWG 24 OF 35

Safety is a Part of Your Contract

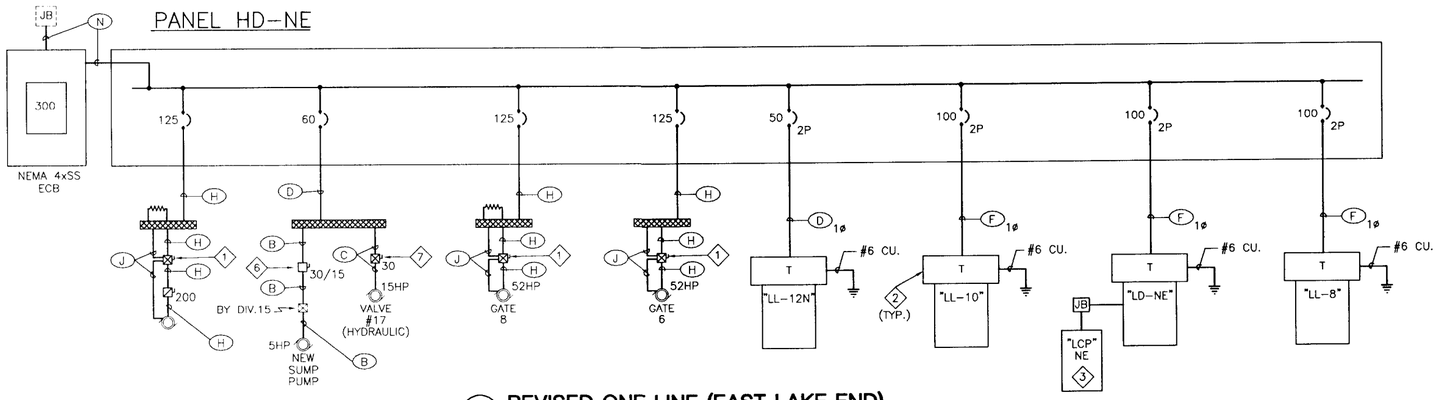

2 REVISED ONE-LINE (EAST LAKE-END)

SCALE: NONE

SEE SHEET E21 FOR SPECIFIC NOTES AND FEEDER SCHEDULE

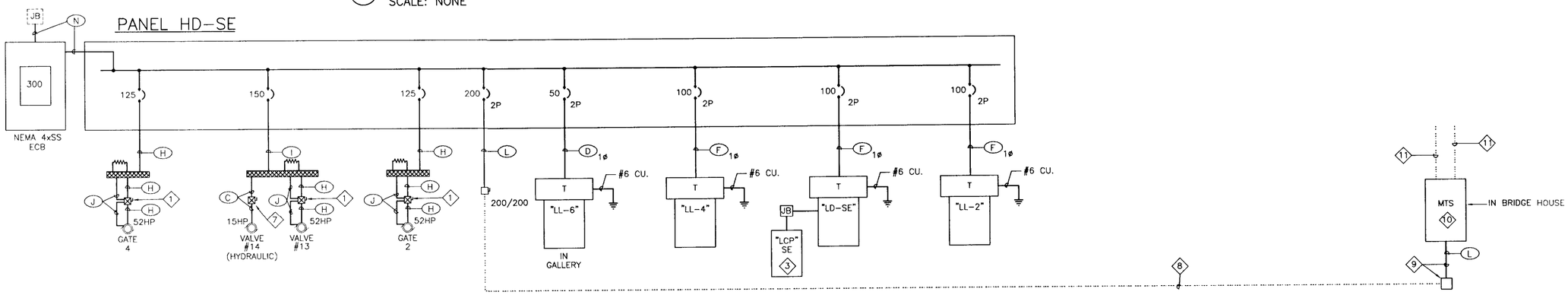

3 REVISED ONE-LINE (EAST RIVER-END AND GALLERY)

SCALE: NONE

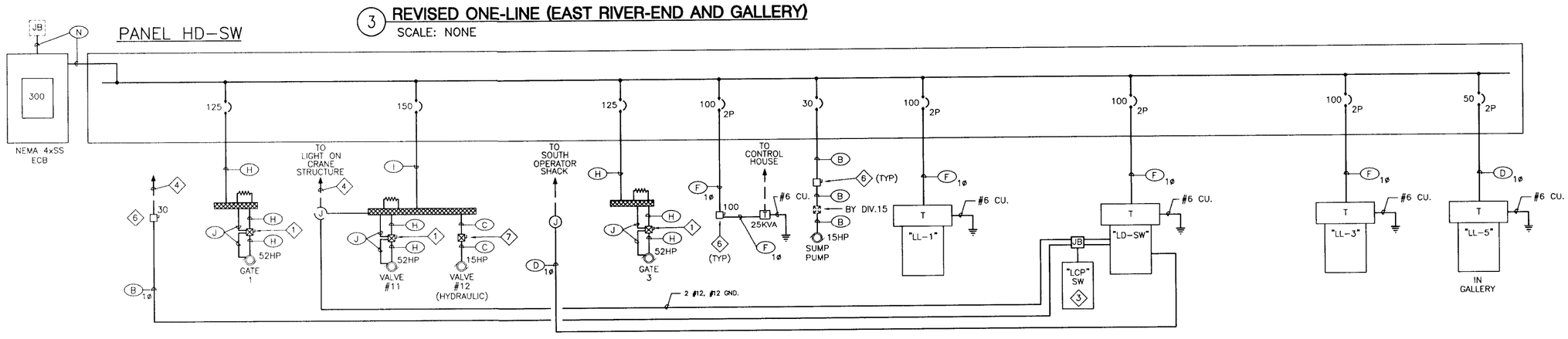

4 REVISED ONE-LINE (WEST RIVER-END AND GALLERY)

SCALE: NONE

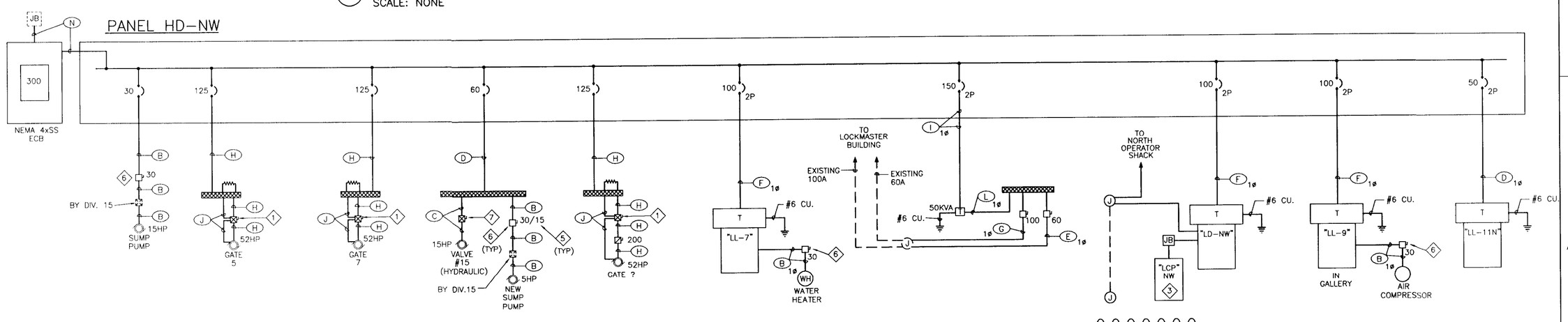

5 REVISED ONE-LINE (WEST LAKE-END)

SCALE: NONE

This drawing has been reduced to half size

© 2006 IMC 1404A CONSULTING ENGINEERS INC
3120 20th STREET
METAIRIE, LOUISIANA 70002

US Army Corps of Engineers New Orleans District

MARK	DESCRIPTION	DATE	APPR.	MARK	DESCRIPTION	DATE	APPR.

U. S. ARMY ENGINEER DISTRICT, NEW ORLEANS
CORPS OF ENGINEERS
NEW ORLEANS, LOUISIANA

DESIGNED BY: PSV
CHECKED BY: KMCL
DRAWN BY: KLH
DATE: 02-17-06
PLOT SCALE: 1=2
PLOT DATE: 02-17-06
DESIGN FILE NAME: J:/1404A/ELEC/E23
SUBMITTED BY: PAUL VLOSICH
DESIGN ENGINEER
SOLICITATION NO.: W912P8-06-B-0034

INNER HARBOR NAVIGATION CANAL
ORLEANS PARISH, LA.

REVISED ELECTRICAL SYSTEM ONE-LINE DIAGRAMS

FILE NUMBER E23

DWG. 25 OF 35

PANEL HD-NW

PANEL NAME:	HD-NW	NUMBER OF PHASES:	3
VOLTAGE:	480	NEUTRAL BUS:	N
BUS SIZE (AMPS):	400	GROUND BAR:	Y
MAIN CIRCUIT BREAKER SIZE:	MLO	MOUNTING:	SURFACE
AIC RATING:	25KA	FEED-THRU LUGS:	N
EST. SSC AMPS AVAIL:	19KA	OTHER OPTIONS:	

PROJECT NAME: IHNC LOCK ELECTRICAL SYSTEM MODIFICATIONS
PROJECT NUMBER: 1404A
DATE: 4/25/2006

SECTION 1

	ITEM	AMP RATING	# POLES	CKT #	LEFT LOADING A	LEFT LOADING B	LEFT LOADING C	RIGHT LOADING A	RIGHT LOADING B	RIGHT LOADING C	CKT #	# POLES	AMP RATING	ITEM	
1	GATE 5	125	3	1	21062			21062			2	3	125	GATE 7	2
3	"					21062			21062					"	4
5	"						21062			21062				"	6
7	VALVE 15 AND NEW SUMP PMP	60	3	3	7538			21062			4	3	125	GATE 9	8
9	"					7538			21062					"	10
11	"						7538			21062				"	12
13	LL-7	100	2	5	10560			20000			6	2	150	LOCKMASTER BUILDING	14
15	"					10560			20000					"	16
17	LL-9	100	2	7			9668								18
19	"				9668							3	200	SPACE	20
21	LL-11N	50	2	9		2368								"	22
23	"						2368							"	24
25	NEW SUMP PUMP	30	3	11	5820									BLANK	26
27	"					5820			7063		8	2	100	LD-NW	28
29	"						5820			7063				"	30
31															32
33															34
35															36
37															38
39															40
41															42
					54648	47348	46455	62124	69187	49187					

TOTAL CONNECTED LOAD (VA):	328947
PHASE A LOADING (VA):	116772
PHASE B LOADING (VA):	116534
PHASE C LOADING (VA):	95642
TOTAL CALCULATED LOAD (VA):	209326
TOTAL CALCULATED LOAD (A):	252

	LOAD	DVRSTY	DMND
1 LIGHTS	0	1.00	0
2 RECEPT <= 10KVA	0	1.00	0
RECEPT > 10KVA	0	0.50	0
3 GATE MTR (LGST)	63186	1.00	63186
4 GATE MTR	126372	0.00	0
5 VALVES	22614	0.60	13568
6 SUMP PUMP	17460	1.00	17460
7 SUB PANEL	99315	1.00	99315
8	0	0.00	0
9	0	1.00	0
10	0	1.00	0

NOTES:
* PROVIDE FINAL TYPEWRITTEN DIRECTORY INSIDE PANEL.
* PROVIDE ENGRAVED PLASTIC LABEL WITH PANEL DESIGNATION ON PANEL COVER.
* ALL PANELS SHALL HAVE GROUND BARS AND BE GROUNDED TO CASE.
* PANEL SHALL BE SQUARE D I-LINE TYPE (OR EQUAL) WITH NEMA 3R, STAINLESS STEEL ENCLOSURE.
* FURNISH WITH INTEGRAL TVSS. MPSC=120KA
* C/B'S OVER 100-AMPS SHALL BE PROVIDED WITH AN ADJUSTABLE MAGNETIC TRIP.
* MAX HEIGHT= 68-INCHES, MAX WIDTH = 48-INCHES

PANEL LD-NW

PANEL NAME:	LD-NW	NUMBER OF PHASES:	1
VOLTAGE:	240	NEUTRAL BUS?	Y
BUS SIZE (AMPS):	NA	GROUND BAR?	Y
POWER ZONE KVA RATING:	25	MOUNTING:	SURFACE
MAIN C/B SIZE (PRIMARY AMPS):	100	FEED-THRU LUGS?	N
MAIN C/B SIZE (SECONDARY AMPS):	125	OTHER OPTIONS:	

PROJECT NAME: IHNC LOCK ELECTRICAL SYSTEM MODIFICATIONS
PROJECT #: 1404A
DATE: 4/25/2006

SECTION 1

	ITEM	AMP RATING	# POLES	CKT #	LEFT LOADING A	LEFT LOADING B	LEFT LOADING C	RIGHT LOADING A	RIGHT LOADING B	RIGHT LOADING C	CKT #	# POLES	AMP RATING	ITEM	
1	SPARE	30	1	1	0			0			2	1	30	SPARE	2
3	SPARE	30	1	3		0			0		4	1	30	SPARE	4
5	SPARE	30	1	5	0			0			6	1	30	SPARE	6
7	SPARE	30	1	7		0			0		8	1	30	SPARE	8
9	SITE LIGHTING NORTHWEST	20	2	9	750			0			10	2	20	SPARE	10
11	"					750			0					"	12
13	MITRE GATE FLOOD LIGHT	20	1	13	200			6000			12	2	60	NORTH OPERATOR SHACK	14
15	SPARE	20	1	15		0			6000					"	16
17	SPARE	20	1	13	0			0			14	1	20	SPARE	18
19	SPARE	20	1	15		0			0		16	1	20	SPARE	20
21	SPACE													SPACE	22
23	SPACE													SPACE	24
					950	750	0	6000	6000	0					

PHASE A LOADING (VA):	6950
PHASE B LOADING (VA):	6750
TOTAL CONNECTED LOAD (VA):	13700
TOTAL CALCULATED LOAD (VA):	14125
TOTAL CONNECTED LOAD (A):	57
TOTAL CALCULATED LOAD (A):	59

	LOAD	DVRSTY	DMND
1 LIGHTS	1700	1.00	1700
2 RECEPT <= 10KVA	0	1.00	0
RECEPT > 10KVA	0	0.50	0
3	0	1.00	0
4 OPER SHACK	12000	1.00	12000
5	0	0.00	0
6	0	1.00	0
7	0	1.00	0
8	0	1.00	0
9	0	1.00	0
10	0	1.00	0

NOTES:
* PROVIDE FINAL TYPEWRITTEN DIRECTORY INSIDE PANEL.
* PROVIDE ENGRAVED PLASTIC LABEL WITH PANEL DESIGNATION ON PANEL COVER.
* ALL CIRCUIT BREAKERS FEEDING FLUORESCENT LAMPS SHALL BE RATED TYPE SWD.
* ALL CIRCUIT BREAKERS FEEDING HID LAMPS SHALL BE RATED TYPE HID.
* ALL PANELS SHALL HAVE GROUND BARS AND BE GROUNDED TO CASE.
* THIS PANEL IS PART OF A COMBINATION TRANSFORMER/ PANEL "MINI-POWER CENTER".
* PROVIDE MINI POWER CENTER WITH NEMA 3R STAINLESS STEEL ENCLOSURE.

PANEL LL-7

PANEL NAME:	LL-7	NUMBER OF PHASES:	1
VOLTAGE:	240	NEUTRAL BUS?	Y
BUS SIZE (AMPS):	NA	GROUND BAR?	Y
POWER ZONE KVA RATING:	25	MOUNTING:	SURFACE
MAIN C/B SIZE (PRIMARY AMPS):	100	FEED-THRU LUGS?	N
MAIN C/B SIZE (SECONDARY AMPS):	125	OTHER OPTIONS:	

PROJECT NAME: IHNC LOCK ELECTRICAL SYSTEM MODIFICATIONS
PROJECT #: 1404A
DATE: 4/25/2006

SECTION 1

	ITEM	AMP RATING	# POLES	CKT #	LEFT LOADING A	LEFT LOADING B	LEFT LOADING C	RIGHT LOADING A	RIGHT LOADING B	RIGHT LOADING C	CKT #	# POLES	AMP RATING	ITEM	
1	G.P. RECEPTACLES	20	1	1	360			540			2	1	20	G.P. RECEPTACLES	2
3	G.P. RECEPTACLES	20	1	3		360			360		4	1	20	G.P. RECEPTACLES	4
5	POWER SHAFT (NORTH CROSSOVER)	20	1	5	500			700			6	1	20	MACHINERY ROOM LIGHTING	6
7	VALVE CHAMBER	20	1	7		500			700		8	1	20	MACHINERY ROOM LIGHTING	8
9	SPARE	60	2	9	0			6000			10	2	50	PORT PUMP RECEP.	10
11	"					0			6000					"	12
13	WATER HEATER	30	2	11	2250						12	1	20	SPARE	14
15	"					2250					14	1	20	SPARE	16
17	SPACE													SPACE	18
19	SPACE													SPACE	20
21	SPACE													SPACE	22
23	SPACE													SPACE	24
					3110	3110	0	7240	7060	0					

PHASE A LOADING (VA):	10350
PHASE B LOADING (VA):	10170
TOTAL CONNECTED LOAD (VA):	20520
TOTAL CALCULATED LOAD (VA):	21120
TOTAL CONNECTED LOAD (A):	86
TOTAL CALCULATED LOAD (A):	88

	LOAD	DVRSTY	DMND
1 LIGHTS	2400	1.00	2400
2 RECEPT <= 10KVA	1620	1.00	1620
RECEPT > 10KVA	0	0.50	0
3 OP SHACK	0	1.00	0
4 PORT PUMP RECEP.	12000	1.00	12000
5 WATER HEATER	4500	1.00	4500
6	0	1.00	0
7	0	1.00	0
8	0	1.00	0
9	0	1.00	0
10	0	1.00	0

NOTES:
* CB'S SERVING PIT/SHAFT CKTS SHALL BE GFCI-TYPE.
* PROVIDE FINAL TYPEWRITTEN DIRECTORY INSIDE PANEL.
* PROVIDE ENGRAVED PLASTIC LABEL WITH PANEL DESIGNATION ON PANEL COVER.
* ALL CIRCUIT BREAKERS FEEDING FLUORESCENT LAMPS SHALL BE RATED TYPE SWD.
* ALL CIRCUIT BREAKERS FEEDING HID LAMPS SHALL BE RATED TYPE HID.
* ALL PANELS SHALL HAVE GROUND BARS AND BE GROUNDED TO CASE.
* THIS PANEL IS PART OF A COMBINATION TRANSFORMER/ PANEL "MINI-POWER CENTER".
* PROVIDE MINI POWER CENTER WITH NEMA 3R STAINLESS STEEL ENCLOSURE.

PANEL LL-9

PANEL NAME:	LL-9	NUMBER OF PHASES:	1
VOLTAGE:	240	NEUTRAL BUS?	Y
BUS SIZE (AMPS):	NA	GROUND BAR?	Y
POWER ZONE KVA RATING:	25	MOUNTING:	SURFACE
MAIN C/B SIZE (PRIMARY AMPS):	100	FEED-THRU LUGS?	N
MAIN C/B SIZE (SECONDARY AMPS):	125	OTHER OPTIONS:	

PROJECT NAME: IHNC LOCK ELECTRICAL SYSTEM MODIFICATIONS
PROJECT #: 1404A
DATE: 4/25/2006

SECTION 1

	ITEM	AMP RATING	# POLES	CKT #	LEFT LOADING A	LEFT LOADING B	LEFT LOADING C	RIGHT LOADING A	RIGHT LOADING B	RIGHT LOADING C	CKT #	# POLES	AMP RATING	ITEM	
1	G.P. RECEPTACLES	20	1	1	360			360			2	1	20	G.P. RECEPTACLES	2
3	G.P. RECEPTACLES	20	1	3		360			180		4	1	20	G.P. RECEPTACLES	4
5	SPARE	20	1	5	0			490			6	1	20	MACHINERY ROOM LIGHTING	6
7	VALVE CHAMBERS	20	1	7		1000			490		8	1	20	MACHINERY ROOM LIGHTING	8
9	AIR COMPRESSOR	30	2	9	1800			6000			10	2	50	PORTABLE PUMP RECEPTACLE	10
11	"					1800			6000					"	12
13	SPACE													SPACE	14
15	SPACE													SPACE	16
17	SPACE													SPACE	18
19	SPACE													SPACE	20
21	SPACE													SPACE	22
23	SPACE													SPACE	24
					2160	3160	0	6850	6670	0					

PHASE A LOADING (VA):	9010
PHASE B LOADING (VA):	9830
TOTAL CONNECTED LOAD (VA):	18840
TOTAL CALCULATED LOAD (VA):	19335
TOTAL CONNECTED LOAD (A):	79
TOTAL CALCULATED LOAD (A):	81

	LOAD	DVRSTY	DMND
1 LIGHTS	1980	1.00	1980
2 RECEPT <= 10KVA	1260	1.00	1260
RECEPT > 10KVA	0	0.50	0
3 AIR COMPR	3600	1.00	3600
4 PUMP RECEP	12000	1.00	12000
5	0	1.00	0
6	0	1.00	0
7	0	1.00	0
8	0	1.00	0
9	0	1.00	0
10	0	1.00	0

NOTES:
* CB'S SERVING PIT/SHAFT CKTS SHALL BE GFCI-TYPE.
* PROVIDE FINAL TYPEWRITTEN DIRECTORY INSIDE PANEL.
* PROVIDE ENGRAVED PLASTIC LABEL WITH PANEL DESIGNATION ON PANEL COVER.
* ALL CIRCUIT BREAKERS FEEDING FLUORESCENT LAMPS SHALL BE RATED TYPE SWD.
* ALL CIRCUIT BREAKERS FEEDING HID LAMPS SHALL BE RATED TYPE HID.
* ALL PANELS SHALL HAVE GROUND BARS AND BE GROUNDED TO CASE.
* THIS PANEL IS PART OF A COMBINATION TRANSFORMER/ PANEL "MINI-POWER CENTER".
* PROVIDE MINI POWER CENTER WITH NEMA 3R STAINLESS STEEL ENCLOSURE.

PANEL LL-11N

PANEL NAME:	LL-11N	NUMBER OF PHASES:	1
VOLTAGE:	240	NEUTRAL BUS?	Y
BUS SIZE (AMPS):	NA	GROUND BAR?	Y
POWER ZONE KVA RATING:	10	MOUNTING:	SURFACE
MAIN C/B SIZE (PRIMARY AMPS):	40	FEED-THRU LUGS?	N
MAIN C/B SIZE (SECONDARY AMPS):	60	OTHER OPTIONS:	

PROJECT NAME: IHNC LOCK ELECTRICAL SYSTEM MODIFICATIONS
PROJECT #: 1404A
DATE: 4/25/2006

SECTION 1

	ITEM	AMP RATING	# POLES	CKT #	LEFT LOADING A	LEFT LOADING B	LEFT LOADING C	RIGHT LOADING A	RIGHT LOADING B	RIGHT LOADING C	CKT #	# POLES	AMP RATING	ITEM	
1	G.P. RECEPTACLES	20	1	1	360			180			2	1	20	G.P. RECEPTACLES	2
3	G.P. RECEPTACLES	20	1	3		360			360		4	1	20	G.P. RECEPTACLES	4
5	GUIDEWALL LIGHTS	20	1	5	1000			490			6	1	20	MACHINERY ROOM LIGHTING	6
7	EXHAUST FAN	20	1	7		1000			490		8	1	20	MACHINERY ROOM LIGHTING	8
9	SPARE	20	1	9	0									SPACE	10
11	SPARE	20	1	11		0								SPACE	12
					1360	1360	0	670	850	0					

PHASE A LOADING (VA):	2030
PHASE B LOADING (VA):	2210
TOTAL CONNECTED LOAD (VA):	4240
TOTAL CALCULATED LOAD (VA):	4735
TOTAL CONNECTED LOAD (A):	18
TOTAL CALCULATED LOAD (A):	20

	LOAD	DVRSTY	DMND
1 LIGHTS	1980	1.00	1980
2 RECEPT <= 10KVA	2260	1.00	2260
RECEPT > 10KVA	0	0.50	0
3 EXHAUST FAN	0	1.00	0
4 GUIDEWALL	0	1.00	0
5	0	1.00	0
6	0	1.00	0
7	0	1.00	0
8	0	1.00	0
9	0	1.00	0
10	0	1.00	0

NOTES:
* PROVIDE FINAL TYPEWRITTEN DIRECTORY INSIDE PANEL.
* PROVIDE ENGRAVED PLASTIC LABEL WITH PANEL DESIGNATION ON PANEL COVER.
* ALL CIRCUIT BREAKERS FEEDING FLUORESCENT LAMPS SHALL BE RATED TYPE SWD.
* ALL CIRCUIT BREAKERS FEEDING HID LAMPS SHALL BE RATED TYPE HID.
* ALL PANELS SHALL HAVE GROUND BARS AND BE GROUNDED TO CASE.
* THIS PANEL IS PART OF A COMBINATION TRANSFORMER/ PANEL "MINI-POWER CENTER".
* PROVIDE MINI POWER CENTER WITH NEMA 3R STAINLESS STEEL ENCLOSURE.

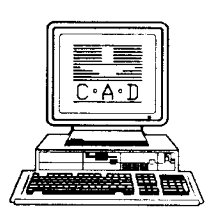

Safety is a Part of Your Contract

This drawing has been reduced to half size

© 2006 IMC 1404A CONSULTING ENGINEERS INC
3120 20th STREET
METAIRIE, LOUISIANA 70002

US Army Corps of Engineers New Orleans District

MARK	DESCRIPTION	DATE	APPR.

U. S. ARMY ENGINEER DISTRICT, NEW ORLEANS
CORPS OF ENGINEERS
NEW ORLEANS, LOUISIANA

DESIGNED BY: PSV
CHECKED BY: KMCL
DRAWN BY: KLH
DATE: 02-17-06
PLOT SCALE: 1=2
PLOT DATE: 02-17-06
DESIGN FILE NAME: J:/1404A/ELEC/E24
SUBMITTED BY: PAUL VLOSICH, DESIGN ENGINEER
SOLICITATION NO. W912P8-06-B-0034

INNER HARBOR NAVIGATION CANAL
ORLEANS PARISH, LA.
IHNC
ELECTRICAL PANEL SCHEDULES
WEST LAKE-END

FILE NUMBER E24
DWG. 26 OF 35

PANEL NAME:	HD-NE	NUMBER OF PHASES:	3	PROJECT NAME:	IHNC LOCK
VOLTAGE:	480	NEUTRAL BUS:	N		ELECTRICAL SYSTEM MODIFICATIONS
BUS SIZE (AMPS):	400	GROUND BAR:	Y	PROJECT NUMBER:	1404A
MAIN CIRCUIT BREAKER SIZE:	MLO	MOUNTING:	SURFACE	DATE:	4/25/2006
AIC RATING:	14KA	FEED-THRU LUGS:	N		
EST. SSC AMPS AVAIL:	<10KA	OTHER OPTIONS:			SECTION 1

	ITEM	AMP RATING	# POLES	CKT #	LEFT LOADING A	LEFT LOADING B	LEFT LOADING C	RIGHT LOADING A	RIGHT LOADING B	RIGHT LOADING C	CKT #	# POLES	AMP RATING	ITEM	
1	GATE 6	125	3	1	21062			21062			2	3	125	GATE 8	2
3	"					21062			21062					"	4
5	"						21062			21062				"	6
7	VALVE 17 AND NEW SUMP PMP	60	3	3	7538			21062			4	3	125	GATE 10	8
9	"					7538			21062					"	10
11	"						7538			21062				"	12
13	LL-8	100	2	5	9628							2	100	SPACE	14
15	"					9628								"	16
17	LL-10	100	2	7			7870					2	100	SPACE	18
19	"				7870									"	20
21	LD-NE	100	2	9		1375			2153		10	2	50	LL-12N	22
23	"						1375			2153				"	24
25	SPACE	200	3									3	200	SPACE	26
27	"													"	28
29	"													"	30
31															32
33															34
35															36
37															38
39															40
41															42
					46098	39603	37845	42124	44277	44277					

			LOAD	DVRSTY	DMND
TOTAL CONNECTED LOAD (VA):	254222	1 LIGHTS	0	1.00	0
PHASE A LOADING (VA):	88222	2 RECEPT <= 10KVA	0	1.00	0
PHASE B LOADING (VA):	83879	RECEPT > 10KVA	0	0.50	0
PHASE C LOADING (VA):	82122	3 GATE MTR (LGST)	63186	1.00	63186
TOTAL CALCULATED LOAD (VA):	134601	4 GATE MTR	126372	0.00	0
		5 VALVES	22614	0.60	13568
		6	0	1.00	0
		7 SUB PANEL	42050	1.00	42050
TOTAL CALCULATED LOAD (A):	162	8	0	1.00	0
		9	0	1.00	0
		10	0	1.00	0

NOTES:
* PROVIDE FINAL TYPEWRITTEN DIRECTORY INSIDE PANEL.
* PROVIDE ENGRAVED PLASTIC LABEL WITH PANEL DESIGNATION ON PANEL COVER.
* ALL PANELS SHALL HAVE GROUND BARS AND BE GROUNDED TO CASE.
* PANEL SHALL BE SQUARE D I-LINE TYPE (OR EQUAL) WITH NEMA 3R, STAINLESS STEEL ENCLOSURE.
* FURNISH WITH INTEGRAL TVSS. MPSC=120KA
* C/B'S OVER 100-AMPS SHALL BE PROVIDED WITH AN ADJUSTABLE MAGNETIC TRIP.
* MAX HEIGHT= 68-INCHES. MAX WIDTH = 48-INCHES

PANEL NAME:	LD-NE	NUMBER OF PHASES:	1	PROJECT NAME:	IHNC LOCK
VOLTAGE:	240	NEUTRAL BUS?	Y		ELECTRICAL SYSTEM MODIFICATIONS
BUS SIZE (AMPS):	NA	GROUND BAR?	Y	PROJECT #:	1404A
POWER ZONE KVA RATING:	25	MOUNTING:	SURFACE	DATE:	4/25/2006
MAIN C/B SIZE (PRIMARY AMPS):	100	FEED-THRU LUGS?	N		
MAIN C/B SIZE (SECONDARY AMPS):	125	OTHER OPTIONS:			SECTION 1

	ITEM	AMP RATING	# POLES	CKT #	LEFT LOADING A	LEFT LOADING B	LEFT LOADING C	RIGHT LOADING A	RIGHT LOADING B	RIGHT LOADING C	CKT #	# POLES	AMP RATING	ITEM	
1	SPARE	40	2	1	0			0				2	60	SPARE	2
3	"					0			0					"	4
5	SITE LIGHTING NORTHEAST	20	2	3	1000			0				2	20	SPARE	6
7	"					1000			0						8
9	MITRE GATE FLOOD LIGHT	20	1		200			0				1	20	SPARE	10
11	SPARE	20	1			0			0			1	20	SPARE	12
13	SPACE													SPACE	14
15	SPACE													SPACE	16
17	SPACE													SPACE	18
19	SPACE													SPACE	20
21	SPACE													SPACE	22
23	SPACE													SPACE	24
					1200	1000	0	0	0	0					

			LOAD	DVRSTY	DMND
		1 LIGHTS	2200	1.00	2200
PHASE A LOADING (VA):	1200	2 RECEPT <= 10KVA	0	1.00	0
PHASE B LOADING (VA):	1000	RECEPT > 10KVA	0	0.50	0
		3 EXISTING LOAD	0	1.00	0
TOTAL CONNECTED LOAD (VA):	2200	4	0	1.00	0
TOTAL CALCULATED LOAD (VA):	2750	5	0	1.00	0
		6	0	1.00	0
TOTAL CONNECTED LOAD (A):	9	7	0	1.00	0
TOTAL CALCULATED LOAD (A):	11	8	0	1.00	0
		9	0	1.00	0
		10	0	1.00	0

NOTES:
* PROVIDE FINAL TYPEWRITTEN DIRECTORY INSIDE PANEL.
* PROVIDE ENGRAVED PLASTIC LABEL WITH PANEL DESIGNATION ON PANEL COVER.
* ALL CIRCUIT BREAKERS FEEDING FLUORESCENT LAMPS SHALL BE RATED TYPE SWD.
* ALL CIRCUIT BREAKERS FEEDING HID LAMPS SHALL BE RATED TYPE HID.
* ALL PANELS SHALL HAVE GROUND BARS AND BE GROUNDED TO CASE.
* THIS PANEL IS PART OF A COMBINATION TRANSFORMER/ PANEL "MINI-POWER CENTER".
* PROVIDE MINI POWER CENTER WITH NEMA 3R STAINLESS STEEL ENCLOSURE.

PANEL NAME:	LL-8	NUMBER OF PHASES:	1	PROJECT NAME:	IHNC LOCK
VOLTAGE:	240	NEUTRAL BUS?	Y		ELECTRICAL SYSTEM MODIFICATIONS
BUS SIZE (AMPS):	NA	GROUND BAR?	Y	PROJECT #:	1404A
POWER ZONE KVA RATING:	25	MOUNTING:	SURFACE	DATE:	4/25/2006
MAIN C/B SIZE (PRIMARY AMPS):	100	FEED-THRU LUGS?	N		
MAIN C/B SIZE (SECONDARY AMPS):	125	OTHER OPTIONS:			SECTION 1

	ITEM	AMP RATING	# POLES	CKT #	LEFT LOADING A	LEFT LOADING B	LEFT LOADING C	RIGHT LOADING A	RIGHT LOADING B	RIGHT LOADING C	CKT #	# POLES	AMP RATING	ITEM	
1	G.P. RECEPTACLES	20	1	1	180			360			2	1	20	G.P. RECEPTACLES	2
3	G.P. RECEPTACLES	20	1	3		180			360		4	1	20	G.P. RECEPTACLES	4
5	POWER SHAFT (NORTH CROSSOVER)	20	1	5	500			770			6	1	20	MACHINERY ROOM LIGHTING	6
7	VALVE CHAMBER	20	1	7		500			770		8	1	20	MACHINERY ROOM LIGHTING	8
9	SPARE	20	1	9	0			6000			10	2	50	PORT PUMP RECEP	10
11	SPARE	20	1	11		0			6000					"	12
13	SPACE													SPACE	14
15	SPACE													SPACE	16
17	SPACE													SPACE	18
19	SPACE													SPACE	20
21	SPACE													SPACE	22
23	SPACE													SPACE	24
					680	680	0	7130	7130	0					

			LOAD	DVRSTY	DMND
		1 LIGHTS	2540	1.00	2540
PHASE A LOADING (VA):	7810	2 RECEPT <= 10KVA	1080	1.00	1080
PHASE B LOADING (VA):	7810	RECEPT > 10KVA	0	0.50	0
		3 PORT PUMP RECEP	12000	1.00	12000
TOTAL CONNECTED LOAD (VA):	15620	4	0	1.00	0
TOTAL CALCULATED LOAD (VA):	19255	5	0	1.00	0
		6	0	1.00	0
TOTAL CONNECTED LOAD (A):	65	7	0	1.00	0
TOTAL CALCULATED LOAD (A):	80	8	0	1.00	0
		9	0	1.00	0
		10	0	1.00	0

NOTES:
* CB'S SERVING PIT/SHAFT CKTS SHALL BE GFCI-TYPE.
* PROVIDE FINAL TYPEWRITTEN DIRECTORY INSIDE PANEL.
* PROVIDE ENGRAVED PLASTIC LABEL WITH PANEL DESIGNATION ON PANEL COVER.
* ALL CIRCUIT BREAKERS FEEDING FLUORESCENT LAMPS SHALL BE RATED TYPE SWD.
* ALL CIRCUIT BREAKERS FEEDING HID LAMPS SHALL BE RATED TYPE HID.
* ALL PANELS SHALL HAVE GROUND BARS AND BE GROUNDED TO CASE.
* THIS PANEL IS PART OF A COMBINATION TRANSFORMER/ PANEL "MINI-POWER CENTER".
* PROVIDE MINI POWER CENTER WITH NEMA 3R STAINLESS STEEL ENCLOSURE.

PANEL NAME:	LL-10	NUMBER OF PHASES:	1	PROJECT NAME:	IHNC LOCK
VOLTAGE:	240	NEUTRAL BUS?	Y		ELECTRICAL SYSTEM MODIFICATIONS
BUS SIZE (AMPS):	NA	GROUND BAR?	Y	PROJECT #:	1404A
POWER ZONE KVA RATING:	25	MOUNTING:	SURFACE	DATE:	4/25/2006
MAIN C/B SIZE (PRIMARY AMPS):	100	FEED-THRU LUGS?	N		
MAIN C/B SIZE (SECONDARY AMPS):	125	OTHER OPTIONS:			SECTION 1

	ITEM	AMP RATING	# POLES	CKT #	LEFT LOADING A	LEFT LOADING B	LEFT LOADING C	RIGHT LOADING A	RIGHT LOADING B	RIGHT LOADING C	CKT #	# POLES	AMP RATING	ITEM	
1	G.P. RECEPTACLES	20	1	1	360			360			2	1	20	G.P. RECEPTACLES	2
3	G.P. RECEPTACLES	20	1	3		360			360		4	1	20	G.P. RECEPTACLES	4
5	SPARE	20	1	5	0			420			6	1	20	MACHINERY ROOM LIGHTING	6
7	VALVE CHAMBERS	20	1	7		1000			420		8	1	20	MACHINERY ROOM LIGHTING	8
9	SPARE	20	1	9	0			6000			10	2	50	PORT PUMP RECEP	10
11	SPARE	20	1	11		0			6000					"	12
13	SPACE													SPACE	14
15	SPACE													SPACE	16
17	SPACE													SPACE	18
19	SPACE													SPACE	20
21	SPACE													SPACE	22
23	SPACE													SPACE	24
					360	1360	0	6780	6780	0					

			LOAD	DVRSTY	DMND
		1 LIGHTS	1840	1.00	1840
PHASE A LOADING (VA):	7140	2 RECEPT <= 10KVA	1440	1.00	1440
PHASE B LOADING (VA):	8140	RECEPT > 10KVA	0	0.50	0
		3 PORT PUMP RECEP	12000	1.00	12000
TOTAL CONNECTED LOAD (VA):	15280	4	0	1.00	0
TOTAL CALCULATED LOAD (VA):	15740	5	0	1.00	0
		6	0	1.00	0
TOTAL CONNECTED LOAD (A):	64	7	0	1.00	0
TOTAL CALCULATED LOAD (A):	66	8	0	1.00	0
		9	0	1.00	0
		10	0	1.00	0

NOTES:
* CB'S SERVING PIT/SHAFT CKTS SHALL BE GFCI-TYPE.
* PROVIDE FINAL TYPEWRITTEN DIRECTORY INSIDE PANEL.
* PROVIDE ENGRAVED PLASTIC LABEL WITH PANEL DESIGNATION ON PANEL COVER.
* ALL CIRCUIT BREAKERS FEEDING FLUORESCENT LAMPS SHALL BE RATED TYPE SWD.
* ALL CIRCUIT BREAKERS FEEDING HID LAMPS SHALL BE RATED TYPE HID.
* ALL PANELS SHALL HAVE GROUND BARS AND BE GROUNDED TO CASE.
* THIS PANEL IS PART OF A COMBINATION TRANSFORMER/ PANEL "MINI-POWER CENTER".
* PROVIDE MINI POWER CENTER WITH NEMA 3R STAINLESS STEEL ENCLOSURE.

PANEL NAME:	LL-12N	NUMBER OF PHASES:	1	PROJECT NAME:	IHNC LOCK
VOLTAGE:	240	NEUTRAL BUS?	Y		ELECTRICAL SYSTEM MODIFICATIONS
BUS SIZE (AMPS):	NA	GROUND BAR?	Y	PROJECT #:	1404A
POWER ZONE KVA RATING:	10	MOUNTING:	SURFACE	DATE:	12/29/2005
MAIN C/B SIZE (PRIMARY AMPS):	40	FEED-THRU LUGS?	N		
MAIN C/B SIZE (SECONDARY AMPS):	60	OTHER OPTIONS:			SECTION 1

	ITEM	AMP RATING	# POLES	CKT #	LEFT LOADING A	LEFT LOADING B	LEFT LOADING C	RIGHT LOADING A	RIGHT LOADING B	RIGHT LOADING C	CKT #	# POLES	AMP RATING	ITEM	
1	G.P. RECEPTACLES	20	1	1	360			360			2	1	20	G.P. RECEPTACLES	2
3	G.P. RECEPTACLES	20	1	3		360			0		4	1	20	SPARE	4
5	GUIDEWALL LIGHTS	20	1	5	1000			490			6	1	20	MACHINERY ROOM LIGHTING	6
7	EXHAUST FAN	20	1	7		1000			490		8	1	20	MACHINERY ROOM LIGHTING	8
9	SPARE	20	1	9	0									SPACE	10
11	SPARE	20	1	11		0								SPACE	12
					1360	1360	0	850	490	0					

			LOAD	DVRSTY	DMND
		1 LIGHTS	980	1.00	980
PHASE A LOADING (VA):	2210	2 RECEPT <= 10KVA	3080	1.00	3080
PHASE B LOADING (VA):	1850	RECEPT > 10KVA	0	0.50	0
		3	0	1.00	0
TOTAL CONNECTED LOAD (VA):	4060	4	0	1.00	0
TOTAL CALCULATED LOAD (VA):	4305	5	0	1.00	0
		6	0	1.00	0
TOTAL CONNECTED LOAD (A):	17	7	0	1.00	0
TOTAL CALCULATED LOAD (A):	18	8	0	1.00	0
		9	0	1.00	0
		10	0	1.00	0

NOTES:
* PROVIDE FINAL TYPEWRITTEN DIRECTORY INSIDE PANEL.
* PROVIDE ENGRAVED PLASTIC LABEL WITH PANEL DESIGNATION ON PANEL COVER.
* ALL CIRCUIT BREAKERS FEEDING FLUORESCENT LAMPS SHALL BE RATED TYPE SWD.
* ALL CIRCUIT BREAKERS FEEDING HID LAMPS SHALL BE RATED TYPE HID.
* ALL PANELS SHALL HAVE GROUND BARS AND BE GROUNDED TO CASE.
* THIS PANEL IS PART OF A COMBINATION TRANSFORMER/ PANEL "MINI-POWER CENTER".
* PROVIDE MINI POWER CENTER WITH NEMA 3R STAINLESS STEEL ENCLOSURE.

Safety is a Part of Your Contract

This drawing has been reduced to half size

© 2006 IMC CONSULTING ENGINEERS INC. 1404A
3120 20th STREET
METAIRIE, LOUISIANA 70002

US Army Corps of Engineers
New Orleans District

MARK	DESCRIPTION	DATE	APPR.	MARK	DESCRIPTION	DATE	APPR.

U. S. ARMY ENGINEER DISTRICT, NEW ORLEANS
CORPS OF ENGINEERS
NEW ORLEANS, LOUISIANA

DESIGNED BY: PSV
CHECKED BY: KMCL
DRAWN BY: KLH
DATE: 02-17-06

DESIGN FILE NAME: J:/1404A/ELEC/E25
SUBMITTED BY: PAUL VLOSICH, DESIGN ENGINEER
SOLICITATION NO.: W912P8-06-B-0034
PLOT SCALE: 1=2
PLOT DATE: 02-17-06

INNER HARBOR NAVIGATION CANAL
ORLEANS PARISH, LA.
IHNC
ELECTRICAL PANEL SCHEDULES
EAST LAKE-END

FILE NUMBER
E25
DWG. 27 OF 35

PANEL NAME:	HD-SW	NUMBER OF PHASES:	3
VOLTAGE:	480	NEUTRAL BUS:	N
BUS SIZE (AMPS):	400	GROUND BAR:	Y
MAIN CIRCUIT BREAKER SIZE:	MLO	MOUNTING:	SURFACE
AIC RATING:	14KA	FEED-THRU LUGS:	N
EST. SSC AMPS AVAIL:	<10KA	OTHER OPTIONS:	

PROJECT NAME: IHNC LOCK
ELECTRICAL SYSTEM MODIFICATIONS
PROJECT NUMBER: 1404A
DATE: 4/25/2006

SECTION 1

	ITEM	AMP RATING	# POLES	CKT #	LEFT LOADING A	LEFT LOADING B	LEFT LOADING C	RIGHT LOADING A	RIGHT LOADING B	RIGHT LOADING C	CKT #	# POLES	AMP RATING	ITEM	
1	GATE 1	125	3	1	21062			21062			2	3	125	GATE 3	2
3	"					21062			21062					"	4
5	"						21062			21062				"	6
7	VALVES 11 AND 12	150	3	3	26383			5820			4	3	30	NEW SUMP PUMP	8
9	"					26383			5820					"	10
11	"						26383			5820				"	12
13	LL-1	100	2	5	8795			12500			6	2	100	CONTROL HOUSE	14
15	"					8795			12500					"	16
17	LL-3	100	2	7			9288					2	100	SPACE	18
19	"				9288									"	20
21	LL-5	50	2	9		2493			9625		10	2	100	LD-SW	22
23	"						2493			9625				"	24
25	SPACE	200	3	11								3	200	SPACE	26
27	"													"	28
29	"													"	30
31															32
33															34
35															36
37															38
39															40
41															42
					65528	58733	59225	39382	49007	36507					

			LOAD	DVRSTY	DMND
TOTAL CONNECTED LOAD (VA):	308381	1 LIGHTS	0	1.00	0
PHASE A LOADING (VA):	104910	2 RECEPT <= 10KVA	0	1.00	0
PHASE B LOADING (VA):	107740	RECEPT > 10KVA	0	0.50	0
PHASE C LOADING (VA):	95732	3 GATE MTR (LGST)	63186	1.00	63186
TOTAL CALCULATED LOAD (VA):	181843	4 GATE MTR	63186	0.00	0
		5 VALVES	79149	0.00	0
		6 SUMP PUMP	17460	1.00	17460
		7 SUB PANEL	85400	1.00	85400
TOTAL CALCULATED LOAD (A):	219	8	0	1.00	0
		9	0	1.00	0
		10	0	1.00	0

NOTES:
* PROVIDE FINAL TYPEWRITTEN DIRECTORY INSIDE PANEL
* PROVIDE ENGRAVED PLASTIC LABEL WITH PANEL DESIGNATION ON PANEL COVER
* ALL PANELS SHALL HAVE GROUND BARS AND BE GROUNDED TO CASE
* PANEL SHALL BE SQUARE D I-LINE TYPE (OR EQUAL) WITH NEMA 3R, STAINLESS STEEL ENCLOSURE
* FURNISH WITH INTEGRAL TVSS. MPSC=120KA
* C/B'S OVER 100-AMPS SHALL BE PROVIDED WITH AN ADJUSTABLE MAGNETIC TRIP
* MAX HEIGHT= 68-INCHES, MAX WIDTH = 48-INCHES

PANEL NAME:	LD-SW	NUMBER OF PHASES:	1
VOLTAGE:	240	NEUTRAL BUS?	Y
BUS SIZE (AMPS):	NA	GROUND BAR?	Y
POWER ZONE KVA RATING:	25	MOUNTING:	SURFACE
MAIN C/B SIZE (PRIMARY AMPS):	100	FEED-THRU LUGS?	N
MAIN C/B SIZE (SECONDARY AMPS):	125	OTHER OPTIONS:	

PROJECT NAME: IHNC LOCK
ELECTRICAL SYSTEM MODIFICATIONS
PROJECT #: 1404A
DATE: 4/25/2006

SECTION 1

	ITEM	AMP RATING	# POLES	CKT #	LEFT LOADING A	LEFT LOADING B	LEFT LOADING C	RIGHT LOADING A	RIGHT LOADING B	RIGHT LOADING C	CKT #	# POLES	AMP RATING	ITEM	
1	SPARE	40	2	1	0			6000			2	2	60	SOUTH OPERATOR SHACK	2
3	"					0			6000						4
5	EXISTING 3 KVA LOAD	20	2	3	1500			1500			4	2	20	SITE LIGHTING CENTER WEST	6
7	"					1500			1500						8
9	MITRE GATE FLOOD LIGHT	20	1	5	200			0			6	1	20	SPARE	10
11	LIGHT ON CRANE STRUCT	20	1	7		200			0		8	1	20	SPARE	12
13	SPACE													SPACE	14
15	SPACE													SPACE	16
17	SPACE													SPACE	18
19	SPACE													SPACE	20
21	SPACE													SPACE	22
23	SPACE													SPACE	24
					1700	1700	0	7500	7500	0					

			LOAD	DVRSTY	DMND
		1 LIGHTS	3400	1.00	3400
PHASE A LOADING (VA):	9200	2 RECEPT <= 10KVA	0	1.00	0
PHASE B LOADING (VA):	9200	RECEPT > 10KVA	0	0.50	0
		3 OPER SHACK	12000	1.00	12000
TOTAL CONNECTED LOAD (VA):	18400	4 EXISTING LOAD	3000	1.00	3000
TOTAL CALCULATED LOAD (VA):	19250	5	0	1.00	0
		6	0	1.00	0
TOTAL CONNECTED LOAD (A):	77	7	0	1.00	0
TOTAL CALCULATED LOAD (A):	80	8	0	1.00	0
		9	0	1.00	0
		10	0	1.00	0

NOTES:
* PROVIDE FINAL TYPEWRITTEN DIRECTORY INSIDE PANEL
* PROVIDE ENGRAVED PLASTIC LABEL WITH PANEL DESIGNATION ON PANEL COVER
* ALL CIRCUIT BREAKERS FEEDING FLUORESCENT LAMPS SHALL BE RATED TYPE SWD
* ALL CIRCUIT BREAKERS FEEDING HID LAMPS SHALL BE RATED TYPE HID
* ALL PANELS SHALL HAVE GROUND BARS AND BE GROUNDED TO CASE
* THIS PANEL IS PART OF A COMBINATION TRANSFORMER/ PANEL "MINI-POWER CENTER"
* PROVIDE MINI POWER CENTER WITH NEMA 3R STAINLESS STEEL ENCLOSURE

PANEL NAME:	LL-1	NUMBER OF PHASES:	1
VOLTAGE:	240	NEUTRAL BUS?	Y
BUS SIZE (AMPS):	NA	GROUND BAR?	Y
POWER ZONE KVA RATING:	25	MOUNTING:	SURFACE
MAIN C/B SIZE (PRIMARY AMPS):	100	FEED-THRU LUGS?	N
MAIN C/B SIZE (SECONDARY AMPS):	125	OTHER OPTIONS:	

PROJECT NAME: IHNC LOCK
ELECTRICAL SYSTEM MODIFICATIONS
PROJECT #: 1404A
DATE: 4/25/2006

SECTION 1

	ITEM	AMP RATING	# POLES	CKT #	LEFT LOADING A	LEFT LOADING B	LEFT LOADING C	RIGHT LOADING A	RIGHT LOADING B	RIGHT LOADING C	CKT #	# POLES	AMP RATING	ITEM	
1	G.P. RECEPTACLES	20	1	1	360			360			2	1	20	G.P. RECEPTACLES	2
3	G.P. RECEPTACLES	20	1	3		360			360		4	1	20	G.P. RECEPTACLES	4
5	VALVE CHAMBER	20	1	5	500			560			6	1	20	MACHINERY ROOM LIGHTING	6
7	VALVE CHAMBERS	20	1	7		1000			560		8	1	20	MACHINERY ROOM LIGHTING	8
9	SPARE	20	2	9				6000			10	2	50	PORT PUMP RECEP	10
11	"								6000					"	12
13	PANEL 1 EXISTING LOAD (?)	20	1	11	1000			0			12	1	20	SPARE	14
15	SPARE	20	1	13		0			0		14	1	20	SPARE	16
17	SPACE													SPACE	18
19	SPACE													SPACE	20
21	SPACE													SPACE	22
23	SPACE													SPACE	24
					1860	1360	0	6920	6920	0					

			LOAD	DVRSTY	DMND
		1 LIGHTS	2120	1.00	2120
PHASE A LOADING (VA):	8780	2 RECEPT <= 10KVA	1940	1.00	1940
PHASE B LOADING (VA):	8280	RECEPT > 10KVA	0	0.50	0
		3 EXISTING LOAD	1000	1.00	1000
TOTAL CONNECTED LOAD (VA):	17060	4 PORT PUMP RECEP	12000	1.00	12000
TOTAL CALCULATED LOAD (VA):	17590	5	0	1.00	0
		6	0	1.00	0
TOTAL CONNECTED LOAD (A):	71	7	0	1.00	0
TOTAL CALCULATED LOAD (A):	73	8	0	1.00	0
		9	0	1.00	0
		10	0	1.00	0

NOTES:
* CB'S SERVING PIT/SHAFT CKTS SHALL BE GFCI-TYPE
* PROVIDE FINAL TYPEWRITTEN DIRECTORY INSIDE PANEL
* PROVIDE ENGRAVED PLASTIC LABEL WITH PANEL DESIGNATION ON PANEL COVER
* ALL CIRCUIT BREAKERS FEEDING FLUORESCENT LAMPS SHALL BE RATED TYPE SWD
* ALL CIRCUIT BREAKERS FEEDING HID LAMPS SHALL BE RATED TYPE HID
* ALL PANELS SHALL HAVE GROUND BARS AND BE GROUNDED TO CASE
* THIS PANEL IS PART OF A COMBINATION TRANSFORMER/ PANEL "MINI-POWER CENTER"
* PROVIDE MINI POWER CENTER WITH NEMA 3R STAINLESS STEEL ENCLOSURE

PANEL NAME:	LL-3	NUMBER OF PHASES:	1
VOLTAGE:	240	NEUTRAL BUS?	Y
BUS SIZE (AMPS):	NA	GROUND BAR?	Y
POWER ZONE KVA RATING:	25	MOUNTING:	SURFACE
MAIN C/B SIZE (PRIMARY AMPS):	100	FEED-THRU LUGS?	N
MAIN C/B SIZE (SECONDARY AMPS):	125	OTHER OPTIONS:	

PROJECT NAME: IHNC LOCK
ELECTRICAL SYSTEM MODIFICATIONS
PROJECT #: 1404A
DATE: 4/25/2006

SECTION 1

	ITEM	AMP RATING	# POLES	CKT #	LEFT LOADING A	LEFT LOADING B	LEFT LOADING C	RIGHT LOADING A	RIGHT LOADING B	RIGHT LOADING C	CKT #	# POLES	AMP RATING	ITEM	
1	G.P. RECEPTACLES	20	1	1	180			360			2	1	20	G.P. RECEPTACLES	2
3	G.P. RECEPTACLES	20	1	3		360			0		4	1	20	SPARE	4
5	POWER SHAFT (SOUTH CROSSOVER)	20	1	5	500			420			6	1	20	MACHINERY ROOM LIGHTING	6
7	SPARE	20	1	7		0			420		8	1	20	MACHINERY ROOM LIGHTING	8
9	PANEL 3 EXISTING LOAD ?	30	1	9	2000			6000			10	2	50	PORT PUMP RECEP	10
11	PANEL 3 EXISTING LOAD ?	30	1	11		2000			6000						12
13	SPACE													SPACE	14
15	SPACE													SPACE	16
17	SPACE													SPACE	18
19	SPACE													SPACE	20
21	SPACE													SPACE	22
23	SPACE													SPACE	24
					2680	2360	0	6780	6420	0					

			LOAD	DVRSTY	DMND
		1 LIGHTS	1340	1.00	1340
PHASE A LOADING (VA):	9460	2 RECEPT <= 10KVA	900	1.00	900
PHASE B LOADING (VA):	8780	RECEPT > 10KVA	0	0.50	0
		3 PORT PUMP RECEP	12000	1.00	12000
TOTAL CONNECTED LOAD (VA):	18240	4 EXISTING LOAD	4000	1.00	4000
TOTAL CALCULATED LOAD (VA):	18575	5	0	1.00	0
		6	0	1.00	0
TOTAL CONNECTED LOAD (A):	76	7	0	1.00	0
TOTAL CALCULATED LOAD (A):	77	8	0	1.00	0
		9	0	1.00	0
		10	0	1.00	0

NOTES:
* CB'S SERVING PIT/SHAFT CKTS SHALL BE GFCI-TYPE
* PROVIDE FINAL TYPEWRITTEN DIRECTORY INSIDE PANEL
* PROVIDE ENGRAVED PLASTIC LABEL WITH PANEL DESIGNATION ON PANEL COVER
* ALL CIRCUIT BREAKERS FEEDING FLUORESCENT LAMPS SHALL BE RATED TYPE SWD
* ALL CIRCUIT BREAKERS FEEDING HID LAMPS SHALL BE RATED TYPE HID
* ALL PANELS SHALL HAVE GROUND BARS AND BE GROUNDED TO CASE
* THIS PANEL IS PART OF A COMBINATION TRANSFORMER/ PANEL "MINI-POWER CENTER"
* PROVIDE MINI POWER CENTER WITH NEMA 3R STAINLESS STEEL ENCLOSURE

PANEL NAME:	LL-5	NUMBER OF PHASES:	1
VOLTAGE:	240	NEUTRAL BUS?	Y
BUS SIZE (AMPS):	NA	GROUND BAR?	Y
POWER ZONE KVA RATING:	10	MOUNTING:	SURFACE
MAIN C/B SIZE (PRIMARY AMPS):	40	FEED-THRU LUGS?	N
MAIN C/B SIZE (SECONDARY AMPS):	60	OTHER OPTIONS:	

PROJECT NAME: IHNC LOCK
ELECTRICAL SYSTEM MODIFICATIONS
PROJECT #: 1404A
DATE: 4/25/2006

SECTION 1

	ITEM	AMP RATING	# POLES	CKT #	LEFT LOADING A	LEFT LOADING B	LEFT LOADING C	RIGHT LOADING A	RIGHT LOADING B	RIGHT LOADING C	CKT #	# POLES	AMP RATING	ITEM	
1	G.P. RECEPTACLES	20	1	1	360			1050			2	1	20	GALLERY LIGHTING	2
3	SPARE	20	1	3		0			1050		4	1	20	GALLERY LIGHTING	4
5	PA SYSTEM	20	1	5	1000			0			6	1	20	SPARE	6
7	PA SYSTEM	20	1	7		1000			0		8	1	20	SPARE	8
9	SPACE													SPACE	10
11	SPACE													SPACE	12
					1360	1000	0	1050	1050	0					

			LOAD	DVRSTY	DMND
		1 LIGHTS	2100	1.00	2100
PHASE A LOADING (VA):	2410	2 RECEPT <= 10KVA	360	1.00	360
PHASE B LOADING (VA):	2050	RECEPT > 10KVA	0	0.50	0
		3 PA SYSTEM	2000	1.00	2000
TOTAL CONNECTED LOAD (VA):	4460	4	0	1.00	0
TOTAL CALCULATED LOAD (VA):	4985	5	0	1.00	0
		6	0	1.00	0
TOTAL CONNECTED LOAD (A):	19	7	0	1.00	0
TOTAL CALCULATED LOAD (A):	21	8	0	1.00	0
		9	0	1.00	0
		10	0	1.00	0

NOTES:
* PROVIDE FINAL TYPEWRITTEN DIRECTORY INSIDE PANEL
* PROVIDE ENGRAVED PLASTIC LABEL WITH PANEL DESIGNATION ON PANEL COVER
* ALL CIRCUIT BREAKERS FEEDING FLUORESCENT LAMPS SHALL BE RATED TYPE SWD
* ALL CIRCUIT BREAKERS FEEDING HID LAMPS SHALL BE RATED TYPE HID
* ALL PANELS SHALL HAVE GROUND BARS AND BE GROUNDED TO CASE
* THIS PANEL IS PART OF A COMBINATION TRANSFORMER/ PANEL "MINI-POWER CENTER"
* PROVIDE MINI POWER CENTER WITH NEMA 3R STAINLESS STEEL ENCLOSURE

Safety is a Part of Your Contract

This drawing has been reduced to half size

© 2006 IMC CONSULTING ENGINEERS INC
3120 20th STREET
METAIRIE, LOUISIANA 70002

US Army Corps of Engineers
New Orleans District

MARK	DESCRIPTION	APPR	DATE	MARK	DESCRIPTION	APPR	DATE

U. S. ARMY ENGINEER DISTRICT, NEW ORLEANS
CORPS OF ENGINEERS
NEW ORLEANS, LOUISIANA

DESIGNED BY: PSV
CHECKED BY: KMCL
DRAWN BY: KLH
DATE: 02-17-06
PLOT SCALE: 1=2
PLOT DATE: 02-17-06
DESIGN FILE NAME: J:/1404A/ELEC/E26
SUBMITTED BY: PAUL VLOSICH, DESIGN ENGINEER
SOLICITATION NO. W912P8-06-B-0034

INNER HARBOR NAVIGATION CANAL
ORLEANS PARISH, LA.
IHNC
ELECTRICAL PANEL SCHEDULES
WEST RIVER-END AND GALLERY

FILE NUMBER
E26
DWG.28 OF 35

PANEL NAME:	HD-SE	NUMBER OF PHASES:	3
VOLTAGE:	480	NEUTRAL BUS:	N
BUS SIZE (AMPS):	400	GROUND BAR:	Y
MAIN CIRCUIT BREAKER SIZE:	MLO	MOUNTING:	SURFACE
AIC RATING:	14KA	FEED-THRU LUGS:	N
EST. SSC AMPS AVAIL.:	<10KA	OTHER OPTIONS:	

PROJECT NAME: IHNC LOCK
ELECTRICAL SYSTEM MODIFICATIONS
PROJECT NUMBER: 1404A
DATE: 4/25/2006
SECTION 1

	ITEM	AMP RATING	# POLES	CKT #	LEFT LOADING A	LEFT LOADING B	LEFT LOADING C	RIGHT LOADING A	RIGHT LOADING B	RIGHT LOADING C	CKT #	# POLES	AMP RATING	ITEM	
1	GATE 2	125	3	1	21062			21062			2	3	125	GATE 4	2
3	"					21062			21062					"	4
5	"						21062			21062				"	6
7	VALVES 13 AND 14	150	3	3	26383			50000			4	3	200	DRAW BRIDGE	8
9	"					26383			50000					"	10
11	"						26383			50000				"	12
13	LL-2	100	2	5	9955							2	100	SPACE	14
15	"					9955								"	16
17	LL-4	100	2	7			7690					2	100	SPACE	18
19	"				7690									"	20
21	LL-6	50	2	9		1493			9188		10	2	100	LD-SE	22
23	"						1493			9188				"	24
25	SPACE	200	3									3	200	SPACE	26
27	"													"	28
29	"													"	30
31															32
33															34
35															36
37															38
39															40
41															42
					65090	58893	56628	71062	80250	80250					

			LOAD	DVRSTY	DMND
TOTAL CONNECTED LOAD (VA):	412171	1 LIGHTS	0	1.00	0
PHASE A LOADING (VA):	136152	2 RECEPT <= 10KVA	0	1.00	0
PHASE B LOADING (VA):	139142	RECEPT > 10KVA	0	0.50	0
PHASE C LOADING (VA):	136877	3 GATE MTR (LGST)	63186	0.00	0
TOTAL CALCULATED LOAD (VA):	206650	4 GATE MTR	63186	0.00	0
		5 VALVES	79149	0.00	0
		6 DRAW BRIDGE	150000	1.00	150000
		7 SUB PANEL	56650	1.00	56650
TOTAL CALCULATED LOAD (A):	249	8	0	1.00	0
		9	0	1.00	0
		10	0	1.00	0

NOTES:
* PROVIDE FINAL TYPEWRITTEN DIRECTORY INSIDE PANEL.
* PROVIDE ENGRAVED PLASTIC LABEL WITH PANEL DESIGNATION ON PANEL COVER.
* ALL PANELS SHALL HAVE GROUND BARS AND BE GROUNDED TO CASE.
* PANEL SHALL BE SQUARE D I-LINE TYPE (OR EQUAL) WITH NEMA 3R, STAINLESS STEEL ENCLOSURE.
* FURNISH WITH INTEGRAL TVSS. MPSC=120KA.
* C/B'S OVER 100-AMPS SHALL BE PROVIDED WITH AN ADJUSTABLE MAGNETIC TRIP.
* MAX HEIGHT= 68-INCHES, MAX WIDTH = 48-INCHES

PANEL NAME:	LD-SE	NUMBER OF PHASES:	1
VOLTAGE:	240	NEUTRAL BUS?	Y
BUS SIZE (AMPS):	NA	GROUND BAR?	Y
POWER ZONE KVA RATING:	25	MOUNTING:	SURFACE
MAIN C/B SIZE (PRIMARY AMPS):	100	FEED-THRU LUGS?	N
MAIN C/B SIZE (SECONDARY AMPS):	125	OTHER OPTIONS:	

PROJECT NAME: IHNC LOCK
ELECTRICAL SYSTEM MODIFICATIONS
PROJECT #: 1404A
DATE: 4/25/2006
SECTION 1

	ITEM	AMP RATING	# POLES	CKT #	LEFT LOADING A	LEFT LOADING B	LEFT LOADING C	RIGHT LOADING A	RIGHT LOADING B	RIGHT LOADING C	CKT #	# POLES	AMP RATING	ITEM	
1	YARD POLES	30	2	1	2500			2500			2	2	30	YARD POLES	2
3	"					2500			2500						4
5	SITE LIGHTING SOUTHEAST	20	2	3	750			1500			4	2	20	SITE LIGHTING CENTER EAST	6
7	"					750			1500						8
9	SPARE	30	1	5	0			0			6	1	20	SPARE	10
11	MITRE GATE FLOOD LIGHTS	20	1	7		200			0		8	1	20	SPARE	12
13	SPACE													SPACE	14
15	SPACE													SPACE	16
17	SPACE													SPACE	18
19	SPACE													SPACE	20
21	SPACE													SPACE	22
23	SPACE													SPACE	24
					3250	3450	0	4000	4000	0					

			LOAD	DVRSTY	DMND
		1 LIGHTS	14700	1.00	14700
PHASE A LOADING (VA):	7250	2 RECEPT <= 10KVA	0	1.00	0
PHASE B LOADING (VA):	7450	RECEPT > 10KVA	0	0.50	0
		3 SUB PANEL	0	1.00	0
TOTAL CONNECTED LOAD (VA):	14700	4	0	1.00	0
TOTAL CALCULATED LOAD (VA):	18375	5	0	1.00	0
		6	0	1.00	0
TOTAL CONNECTED LOAD (A):	61	7	0	1.00	0
TOTAL CALCULATED LOAD (A):	77	8	0	1.00	0
		9	0	1.00	0
		10	0	1.00	0

NOTES:
* PROVIDE FINAL TYPEWRITTEN DIRECTORY INSIDE PANEL.
* PROVIDE ENGRAVED PLASTIC LABEL WITH PANEL DESIGNATION ON PANEL COVER.
* ALL CIRCUIT BREAKERS FEEDING FLUORESCENT LAMPS SHALL BE RATED TYPE SWD.
* ALL CIRCUIT BREAKERS FEEDING HID LAMPS SHALL BE RATED TYPE HID.
* ALL PANELS SHALL HAVE GROUND BARS AND BE GROUNDED TO CASE.
* THIS PANEL IS PART OF A COMBINATION TRANSFORMER/ PANEL "MINI-POWER CENTER".
* PROVIDE MINI POWER CENTER WITH NEMA 3R STAINLESS STEEL ENCLOSURE.

PANEL NAME:	LL-2	NUMBER OF PHASES:	1
VOLTAGE:	240	NEUTRAL BUS?	Y
BUS SIZE (AMPS):	NA	GROUND BAR?	Y
POWER ZONE KVA RATING:	25	MOUNTING:	SURFACE
MAIN C/B SIZE (PRIMARY AMPS):	100	FEED-THRU LUGS?	N
MAIN C/B SIZE (SECONDARY AMPS):	125	OTHER OPTIONS:	

PROJECT NAME: IHNC LOCK
ELECTRICAL SYSTEM MODIFICATIONS
PROJECT #: 1404A
DATE: 4/25/2006
SECTION 1

	ITEM	AMP RATING	# POLES	CKT #	LEFT LOADING A	LEFT LOADING B	LEFT LOADING C	RIGHT LOADING A	RIGHT LOADING B	RIGHT LOADING C	CKT #	# POLES	AMP RATING	ITEM	
1	G.P. RECEPTACLES	20	1	1	180			360			2	1	20	G.P. RECEPTACLES	2
3	G.P. RECEPTACLES	20	1	3		360			360		4	1	20	G.P. RECEPTACLES	4
5	SPARE	30	1	5	0			560			6	1	20	MACHINERY ROOM LIGHTING	6
7	VALVE CHAMBERS	20	1	7		1000			560		8	1	20	MACHINERY ROOM LIGHTING	8
9	PANEL 2 EXISTING LOAD (?)	30	1	9	2000			6000			10	2	50	PORT PUMP RECEP	10
11	PANEL 2 EXISTING LOAD (?)	30	1	11		2000			6000					"	12
13	SPACE													SPACE	14
15	SPACE													SPACE	16
17	SPACE													SPACE	18
19	SPACE													SPACE	20
21	SPACE													SPACE	22
23	SPACE													SPACE	24
					2180	3360	0	6920	6920	0					

			LOAD	DVRSTY	DMND
		1 LIGHTS	2120	1.00	2120
PHASE A LOADING (VA):	9100	2 RECEPT <= 10KVA	1260	1.00	1260
PHASE B LOADING (VA):	10280	RECEPT > 10KVA	0	0.50	0
		3 PORT PUMP RECEP	12000	1.00	12000
TOTAL CONNECTED LOAD (VA):	19380	4 EXISTING LOAD	4000	1.00	4000
TOTAL CALCULATED LOAD (VA):	19910	5	0	1.00	0
		6	0	1.00	0
TOTAL CONNECTED LOAD (A):	81	7	0	1.00	0
TOTAL CALCULATED LOAD (A):	83	8	0	1.00	0
		9	0	1.00	0
		10	0	1.00	0

NOTES:
* CB'S SERVING PIT/SHAFT CKTS SHALL BE GFCI-TYPE.
* PROVIDE FINAL TYPEWRITTEN DIRECTORY INSIDE PANEL.
* PROVIDE ENGRAVED PLASTIC LABEL WITH PANEL DESIGNATION ON PANEL COVER.
* ALL CIRCUIT BREAKERS FEEDING FLUORESCENT LAMPS SHALL BE RATED TYPE SWD.
* ALL CIRCUIT BREAKERS FEEDING HID LAMPS SHALL BE RATED TYPE HID.
* ALL PANELS SHALL HAVE GROUND BARS AND BE GROUNDED TO CASE.
* THIS PANEL IS PART OF A COMBINATION TRANSFORMER/ PANEL "MINI-POWER CENTER".
* PROVIDE MINI POWER CENTER WITH NEMA 3R STAINLESS STEEL ENCLOSURE.

PANEL NAME:	LL-4	NUMBER OF PHASES:	1
VOLTAGE:	240	NEUTRAL BUS?	Y
BUS SIZE (AMPS):	NA	GROUND BAR?	Y
POWER ZONE KVA RATING:	25	MOUNTING:	SURFACE
MAIN C/B SIZE (PRIMARY AMPS):	100	FEED-THRU LUGS?	N
MAIN C/B SIZE (SECONDARY AMPS):	125	OTHER OPTIONS:	

PROJECT NAME: IHNC LOCK
ELECTRICAL SYSTEM MODIFICATIONS
PROJECT #: 1404A
DATE: 4/25/2006
SECTION 1

	ITEM	AMP RATING	# POLES	CKT #	LEFT LOADING A	LEFT LOADING B	LEFT LOADING C	RIGHT LOADING A	RIGHT LOADING B	RIGHT LOADING C	CKT #	# POLES	AMP RATING	ITEM	
1	G.P. RECEPTACLES	20	1	1	360			360			2	1	20	G.P. RECEPTACLES	2
3	G.P. RECEPTACLES	20	1	3		360			0		4	1	20	SPARE	4
5	POWER SHAFT (SOUTH CROSSOVER)	20	1	5	500			420			6	1	20	MACHINERY ROOM LIGHTING	6
7	VALVE CHAMBER	20	1	7		500			420		8	1	20	MACHINERY ROOM LIGHTING	8
9	SPARE	20	1	9	0			6000			10	2	50	PORT PUMP RECEP	10
11	SPARE	20	1	11		0			6000					"	12
13	SPACE													SPACE	14
15	SPACE													SPACE	16
17	SPACE													SPACE	18
19	SPACE													SPACE	20
21	SPACE													SPACE	22
23	SPACE													SPACE	24
					860	860	0	6780	6420	0					

			LOAD	DVRSTY	DMND
		1 LIGHTS	1840	1.00	1840
PHASE A LOADING (VA):	7640	2 RECEPT <= 10KVA	1080	1.00	1080
PHASE B LOADING (VA):	7280	RECEPT > 10KVA	0	0.50	0
		3 PORT PUMP RECEP	12000	1.00	12000
TOTAL CONNECTED LOAD (VA):	14920	4	0	1.00	0
TOTAL CALCULATED LOAD (VA):	15380	5	0	1.00	0
		6	0	1.00	0
TOTAL CONNECTED LOAD (A):	62	7	0	1.00	0
TOTAL CALCULATED LOAD (A):	64	8	0	1.00	0
		9	0	1.00	0
		10	0	1.00	0

NOTES:
* CB'S SERVING PIT/SHAFT CKTS SHALL BE GFCI-TYPE.
* PROVIDE FINAL TYPEWRITTEN DIRECTORY INSIDE PANEL.
* PROVIDE ENGRAVED PLASTIC LABEL WITH PANEL DESIGNATION ON PANEL COVER.
* ALL CIRCUIT BREAKERS FEEDING FLUORESCENT LAMPS SHALL BE RATED TYPE SWD.
* ALL CIRCUIT BREAKERS FEEDING HID LAMPS SHALL BE RATED TYPE HID.
* ALL PANELS SHALL HAVE GROUND BARS AND BE GROUNDED TO CASE.
* THIS PANEL IS PART OF A COMBINATION TRANSFORMER/ PANEL "MINI-POWER CENTER".
* PROVIDE MINI POWER CENTER WITH NEMA 3R STAINLESS STEEL ENCLOSURE.

PANEL NAME:	LL-6	NUMBER OF PHASES:	1
VOLTAGE:	240	NEUTRAL BUS?	Y
BUS SIZE (AMPS):	NA	GROUND BAR?	Y
POWER ZONE KVA RATING:	10	MOUNTING:	SURFACE
MAIN C/B SIZE (PRIMARY AMPS):	40	FEED-THRU LUGS?	N
MAIN C/B SIZE (SECONDARY AMPS):	60	OTHER OPTIONS:	

PROJECT NAME: IHNC LOCK
ELECTRICAL SYSTEM MODIFICATIONS
PROJECT #: 1404A
DATE: 4/25/2006
SECTION 1

	ITEM	AMP RATING	# POLES	CKT #	LEFT LOADING A	LEFT LOADING B	LEFT LOADING C	RIGHT LOADING A	RIGHT LOADING B	RIGHT LOADING C	CKT #	# POLES	AMP RATING	ITEM	
1	G.P. RECEPTACLES	20	1	1	360			1050			2	1	20	GALLERY LIGHTING	2
3	SPARE	20	1	3		0			1050		4	1	20	GALLERY LIGHTING	4
5	SPARE	20	1	5							6	1	20	SPARE	6
7	SPARE	20	1	7							8	1	20	SPARE	8
9	SPACE													SPACE	10
11	SPACE													SPACE	12
					360	0	0	1050	1050	0					

			LOAD	DVRSTY	DMND
		1 LIGHTS	2100	1.00	2100
PHASE A LOADING (VA):	1410	2 RECEPT <= 10KVA	360	1.00	360
PHASE B LOADING (VA):	1050	RECEPT > 10KVA	0	0.50	0
		3	0	1.00	0
TOTAL CONNECTED LOAD (VA):	2460	4	0	1.00	0
TOTAL CALCULATED LOAD (VA):	2985	5	0	1.00	0
		6	0	1.00	0
TOTAL CONNECTED LOAD (A):	10	7	0	1.00	0
TOTAL CALCULATED LOAD (A):	12	8	0	1.00	0
		9	0	1.00	0
		10	0	1.00	0

NOTES:
* PROVIDE FINAL TYPEWRITTEN DIRECTORY INSIDE PANEL.
* PROVIDE ENGRAVED PLASTIC LABEL WITH PANEL DESIGNATION ON PANEL COVER.
* ALL CIRCUIT BREAKERS FEEDING FLUORESCENT LAMPS SHALL BE RATED TYPE SWD.
* ALL CIRCUIT BREAKERS FEEDING HID LAMPS SHALL BE RATED TYPE HID.
* ALL PANELS SHALL HAVE GROUND BARS AND BE GROUNDED TO CASE.
* THIS PANEL IS PART OF A COMBINATION TRANSFORMER/ PANEL "MINI-POWER CENTER".
* PROVIDE MINI POWER CENTER WITH NEMA 3R STAINLESS STEEL ENCLOSURE.

Safety is a Part of Your Contract

VALUE INCENTIVE SUGGESTION ENGINEERING — YOUR KEY TO HIGHER PROFITS

This drawing has been reduced to half size

© 2006 IMC CONSULTING ENGINEERS INC. 3120 20th STREET METAIRIE, LOUISIANA 70002

US Army Corps of Engineers New Orleans District

MARK	DESCRIPTION	DATE	APPR.	MARK	DESCRIPTION	DATE	APPR.

U. S. ARMY ENGINEER DISTRICT, NEW ORLEANS
CORPS OF ENGINEERS
NEW ORLEANS, LOUISIANA

DESIGNED BY: PSV
CHECKED BY: KMCL
DRAWN BY: KLH
DATE: 02-17-06

PLOT SCALE: 1=2
PLOT DATE: 02-17-06
DESIGN FILE NAME: J:/1404A/ELEC/E27
SUBMITTED BY: PAUL VLOSICH, DESIGN ENGINEER
SOLICITATION NO. W912P8-06-B-0034

INNER HARBOR NAVIGATION CANAL
ORLEANS PARISH, LA.
IHNC
ELECTRICAL PANEL SCHEDULES
EAST RIVER-END AND GALLERY

FILE NUMBER: E27
DWG. 29 OF 35

SPECIFICATION NOTES:

1. COMPLY WITH LOCAL (CITY OF NEW ORLEANS) AND STATE CODES AND NATIONAL ELECTRICAL CODE

2. COMPLETELY GROUND ENTIRE ELECTRICAL SYSTEM AS PER NATIONAL ELECTRICAL CODE.

3. APPLY FOR PERMIT AND PAY ALL FEES. PROVIDE FINAL INSPECTION CERTIFICATE.

4. WORKMANSHIP:

   WORKMANSHIP TO MEET N.E.C.A. GUIDELINES.

   ARRANGE ELECTRICAL WORK IN A NEAT, WELL ORGANIZED MANNER WITH EXPOSED CONDUIT AND SIMILAR SERVICES RUNNING PARALLEL WITH PRIMARY LINES OF THE BUILDING CONSTRUCTION, AND WITH A MINIMUM OF 8'-0" OVERHEAD CLEARANCE OR AS DIRECTED BY THE ARCHITECT.

5. COORDINATION OF ELECTRICAL WORK:

   CONTRACT DOCUMENTS ARE DIAGRAMMATIC IN SHOWING CERTAIN PHYSICAL RELATIONSHIPS WHICH MUST BE ESTABLISHED WITHIN THE ELECTRICAL WORK, AND IN ITS INTERFACE WITH OTHER WORK INCLUDING UTILITIES AND MECHANICAL WORK, AND THAT SUCH ESTABLISHMENT IS THE EXCLUSIVE RESPONSIBILITY OF THE CONTRACTOR.

   VERIFY FINAL LOCATIONS FOR ROUGH-INS WITH FIELD MEASUREMENTS AND WITH THE REQUIREMENTS OF THE ACTUAL EQUIPMENT TO BE CONNECTED.

   REFER TO MANUFACTURER'S EQUIPMENT SPECIFICATIONS FOR ROUGH-IN REQUIREMENTS.

   ALL EQUIPMENT SHALL BE INSTALLED IN ACCORDANCE WITH THE MANUFACTURER'S REQUIREMENTS. FOR ALL EQUIPMENT REQUIRING AN ELECTRICAL CONNECTION, CONSULT MANUFACTURER'S LITERATURE PRIOR TO INSTALLING ELECTRICAL ROUGH-INS OR PURCHASING ASSOCIATED ELECTRICAL DEVICES AND EQUIPMENT. BRING ANY DISCREPANCIES BETWEEN THE MANUFACTURER'S LITERATURE AND THE ELECTRICAL DRAWINGS TO THE IMMEDIATE ATTENTION OF THE ELECTRICAL ENGINEER.

   VERIFY ALL DIMENSIONS BY FIELD MEASUREMENTS.

   REFER TO THE ELECTRICAL DRAWINGS FOR GRAPHIC REPRESENTATIONS, SCHEDULES AND NOTATIONS SHOWING ELECTRICAL WORK.

   THE DRAWINGS SHOW APPROXIMATE LOCATIONS ONLY OF FEEDERS, BRANCH CIRCUITS, OUTLETS, ETC., EXCEPT WHERE SPECIFIC ROUTING OR DIMENSIONS ARE INDICATED. THE ENGINEER AND OWNER RESERVE THE RIGHT TO MAKE REASONABLE CHANGES IN LOCATIONS INDICATED BEFORE ROUGHING-IN WITHOUT ADDITIONAL COST TO THE OWNER.

   BECAUSE OF THE SMALL SCALE OF THE DRAWINGS, IT IS NOT POSSIBLE TO INDICATE ALL OF THE OFFSETS, FITTINGS, AND ACCESSORIES REQUIRED. THE CONTRACTOR SHALL INVESTIGATE THE STRUCTURAL AND FINISH CONDITIONS AFFECTING HIS WORK AND SHALL ARRANGE SUCH WORK ACCORDINGLY, FURNISHING FITTINGS, BENDS, JUNCTION BOXES, PULL BOXES, ACCESS PANELS, AND ACCESSORIES REQUIRED TO MEET SUCH CONDITIONS.

   SEQUENCE, COORDINATE, AND INTEGRATE INSTALLATIONS OF ELECTRICAL MATERIALS AND EQUIPMENT FOR EFFICIENT FLOW OF THE WORK.

   COORDINATE THE CUTTING AND PATCHING OF FACILITY COMPONENTS TO ACCOMMODATE THE INSTALLATION OF ELECTRICAL EQUIPMENT AND MATERIALS.

   WHERE MOUNTING HEIGHTS ARE NOT DETAILED OR DIMENSIONED, INSTALL ELECTRICAL SERVICES AND OVERHEAD EQUIPMENT TO PROVIDE THE MAXIMUM HEADROOM POSSIBLE.

   INSTALL ELECTRICAL EQUIPMENT TO FACILITATE MAINTENANCE AND REPAIR OR REPLACEMENT OF EQUIPMENT COMPONENTS. AS MUCH AS PRACTICAL, CONNECT EQUIPMENT FOR EASE OF DISCONNECTING, WITH MINIMUM OF INTERFERENCE WITH OTHER INSTALLATIONS.

   CONTACT AND MEET WITH THE ELECTRICAL ENGINEER AT THE JOB SITE PRIOR TO BEGINNING WORK TO REVIEW PROJECT REQUIREMENTS.

6. SITE VISIT:

   PRIOR TO BIDDING JOB, CONTRACTOR SHALL VISIT JOB SITE AND BECOME FAMILIAR WITH EXISTING CONDITIONS AND WITH EQUIPMENT, FIXTURES AND DEVICES TO BE LOCATED, INSTALLED OR REMOVED.

7. SITE AND CONCRETE WORK:

   EXISTING UTILITIES:

   LOCATE AND PROTECT EXISTING UTILITIES AND OTHER UNDERGROUND WORK IN A MANNER WHICH WILL ENSURE THAT NO DAMAGE TO PERSONNEL OR PROPERTY OR SERVICE INTERRUPTION WILL RESULT FROM BORING, EXCAVATING OR BACKFILLING.

   CAREFULLY PLAN ALL WORK TO AVOID EXISTING UTILITIES AND OTHER INTERFERENCES. EXISTING UTILITY LINES TO BE RETAINED THAT ARE SHOWN ON THE DRAWINGS OR THE LOCATIONS OF WHICH ARE MADE KNOWN TO THE CONTRACTOR PRIOR TO EXCAVATION, AS WELL AS ALL UTILITY LINES UNCOVERED DURING EXCAVATION OPERATIONS, SHALL BE PROTECTED FROM DAMAGE DURING EXCAVATION AND BACKFILLING AND, IF DAMAGED, SHALL BE REPAIRED BY THE CONTRACTOR AT HIS EXPENSE. PRIOR TO DOING ANY EXCAVATION WITH POWER TOOLS, CAREFULLY INVESTIGATE AND LOCATE ANY EXISTING CONDUIT, PIPES, AND OTHER LINES, SO AS TO AVOID THEM DURING EXCAVATION.

   BACKFILL MATERIALS:

   SUBBASE MATERIAL: A GRADED MIXTURE OF GRAVEL, SAND, CRUSHED STONE OR CRUSHED SLAG.

   BACKFILL MATERIAL: SOIL MATERIAL SUITABLE FOR COMPACTING TO REQUIRED DENSITIES, AND COMPLYING WITH AASHTO DESIGNATION M 145. GROUP A-1, A-2-4, A-2-5, OR A-3.

   DRAINAGE FILL MATERIAL: WASHED AND UNIFORMLY GRADED GRAVEL, CRUSHED STONE OR CRUSHED SLAB, WITH 100 % PASSING A 1-1/2" SIEVE AND NOT MORE THAN 5% PASSING A NO. 4 SIEVE.

   DIRECTIONAL BORING:

   WHERE EXPLICITLY APPROVED ON THE DRAWINGS, DIRECTIONAL BORING SHALL BE ALLOWED. CONDUIT(S) ATTACHED TO BORING EQUIPMENT SHALL BE HDPE TYPE WITH INTEGRAL TRACER WIRE. MINIMUM DEPTH SHALL BE 5-FEET FOR ALL BORED CONDUITS.

   EXCAVATION, TRENCHING AND BACKFILLING:

   PROTECT PROPERTY FROM DAMAGE WHICH MIGHT RESULT FROM EXCAVATING AND BACKFILLING. PROTECT PERSONS FROM INJURY AT EXCAVATIONS BY BARRICADES, WARNINGS AND ILLUMINATION.

   COORDINATE EXCAVATIONS WITH WEATHER CONDITIONS, TO MINIMIZE POSSIBILITY OF WASHOUTS, SETTLEMENTS AND OTHER DAMAGES AND HAZARDS.

   PERFORM ALL EXCAVATION OF EVERY DESCRIPTION AND OF WHATEVER SUBSTANCES ENCOUNTERED TO THE DEPTHS INDICATED ON THE DRAWINGS OR AS OTHERWISE SPECIFIED. DURING EXCAVATION, MATERIAL SUITABLE FOR BACKFILLING SHALL BE PILED IN AN ORDERLY MANNER A SUFFICIENT DISTANCE FROM THE BANKS OF THE TRENCH TO AVOID OVERLOADING AND TO PREVENT SLIDES OR CAVE-INS. ALL EXCAVATED MATERIALS NOT REQUIRED OR NOT SUITABLE FOR BACKFILL SHALL BE REMOVED AND WASTED OR REMOVED FROM JOB SITE AS INDICATED ON THE DRAWINGS OR AS DIRECTED BY ARCHITECT, AT NO ADDITIONAL COST TO OWNER.

   SHEETING AND SHORING SHALL BE DONE AS NECESSARY FOR THE PROTECTION OF THE WORK AND FOR THE SAFETY OF PERSONNEL. PROVIDE NECESSARY PUMPING AT ALL TIMES TO MAINTAIN A DRY WORKING CONDITION IN ALL TRENCHES. UNLESS OTHERWISE INDICATED, EXCAVATIONS SHALL BE BY OPEN CUT EXCEPT THAT SHORT SECTIONS OF A TRENCH MAY BE TUNNELED IF, IN THE OPINION OF THE ARCHITECT, THE CONDUIT CAN BE SAFELY AND PROPERLY INSTALLED AND BACKFILL CAN BE PROPERLY TAMPED IN SUCH TUNNELED SECTIONS.

   NO EXCAVATION OR TRENCHES SHALL BE CUT NEAR OR UNDER FOOTINGS WITHOUT FIRST CONSULTING ARCHITECT.

   BOTTOM OF TRENCH SHALL BE SHAPED TO GIVE SUBSTANTIALLY UNIFORM CIRCUMFERENTIAL SUPPORT TO LOWER THIRD OF EACH PIPE. EACH PIPE SHALL BE LAID TRUE TO LINE AND GRADE AND IN SUCH MANNER AS TO FORM A CLOSE CONCENTRIC JOINT WITH ADJOINING PIPE AND TO PREVENT SUDDEN OFFSET TO FLOW LINE. AS WORK PROGRESSES, INTERIOR OF PIPE SHALL BE CLEARED OF DIRT AND SUPERFLUOUS MATERIALS OF EVERY DESCRIPTION.

   WHEREVER WET OR OTHERWISE UNSTABLE SOIL THAT IS INCAPABLE OF PROPERLY SUPPORTING THE PIPE, AS DETERMINED BY THE ARCHITECT, IS ENCOUNTERED IN THE BOTTOM OF THE TRENCH, SUCH SOIL SHALL BE REMOVED TO THE DEPTH REQUIRED AND THE TRENCH BACKFILLED TO THE PROPER GRADE WITH COARSE SAND, FINE GRAVEL, OR OTHER SUITABLE MATERIAL, AS APPROVED BY THE ARCHITECT.

   TRENCHES FOR UTILITIES SHALL BE OF A DEPTH THAT WILL PROVIDE THE FOLLOWING MINIMUM DEPTH OF COVER FROM EXISTING GRADE OR FROM INDICATED FINISH GRADE, WHICHEVER IS LOWER, UNLESS OTHERWISE SPECIFICALLY SHOWN:

   24-INCH MINIMUM COVER – ELECTRICAL CONDUIT UNDER 600 VOLTS.
   36-INCH MINIMUM COVER – ELECTRICAL CONDUIT OVER 600 VOLTS.

   BACKFILL SHALL BE INSTALLED IN LAYERS 6" DEEP, ADEQUATELY WETTED (IF APPROVED BY ARCHITECT) AND TAMPED USING MATERIALS AS NOTED ABOVE. THE SURFACES SHALL BE GRADED TO A REASONABLE UNIFORMITY AND THE MOUNTING OVER TRENCHES LEFT IN A UNIFORM AND NEAT CONDITION AS APPROVED BY THE ARCHITECT.

   RESTORE ALL HARD FINISHED SURFACES SUCH AS ROADWAY, SIDEWALKS, GRASS, SHRUBBERY, ETC., REMOVED FOR INSTALLATION OF UTILITIES TO THEIR ORIGINAL CONDITION USING THE SAME TYPE AS ORIGINAL MATERIALS.

8. ELECTRICAL SERVICE:

   THREE-PHASE, FOUR-WIRE, 480Y/277-VOLT ELECTRICAL SERVICE HAS BEEN INSTALLED IN MANHOLES TO THE EXISTING LOCKMASTER'S BUILDING AS INDICATED ON DRAWINGS.

   COORDINATE NEW AND TEMPORARY ELECTRICAL SERVICES AND ALL REQUIRED OUTAGES WITH THE OWNER AND ENTERGY. LIMIT OUTAGES AS MUCH AS POSSIBLE.

9. TEMPORARY ELECTRICITY:

   PROVIDE TEMPORARY POWER DURING CONSTRUCTION. FURNISH AND INSTALL ALL NECESSARY TEMPORARY POWER, METERING, LIGHTING OR WIRING THAT IS REQUIRED TO INSURE QUALITY WORKMANSHIP EVERYWHERE.

10. DEMOLITION:

    REMOVE BOXES, LIGHT FIXTURES, AND WIRING DEVICES AS NOTED ON DRAWINGS.

    EXTEND CONDUITS AND CONDUCTORS TO MAINTAIN ELECTRICAL CONTINUITY OF ELECTRICAL EQUIPMENT SERVING EQUIPMENT NOT DEMOLISHED AS REQUIRED.

    ALL CONTROL AND COMMUNICATION WIRING AND CONDUIT SHALL REMAIN.

11. DELIVERY, STORAGE, AND HANDLING:

    DELIVER PRODUCTS TO PROJECT PROPERLY IDENTIFIED WITH NAMES, MODEL NUMBERS, TYPES, GRADES, COMPLIANCE LABELS, AND SIMILAR INFORMATION NEEDED FOR DISTINCT IDENTIFICATIONS, ADEQUATELY PACKAGED AND PROTECTED TO PREVENT DAMAGE DURING SHIPMENT, STORAGE, AND HANDLING. STORE EQUIPMENT AND MATERIALS AT THE SITE, UNLESS OFF-SITE STORAGE IS AUTHORIZED IN WRITING. PROTECT STORED EQUIPMENT AND MATERIALS FROM DAMAGE. COORDINATE DELIVERIES OF ELECTRICAL MATERIALS AND EQUIPMENT TO MINIMIZE CONSTRUCTION SITE CONGESTION.

12. IDENTIFICATION:

    IDENTIFY ALL ELECTRICAL EQUIPMENT (PANELS, TRANSFORMERS, ETC.) AND CONTROLS BY STENCILED PLASTIC TAGS. IDENTIFY ALL JUNCTION BOXES CONTAINING CONDUCTORS WITH BRANCH CIRCUIT NUMBERS AND PANEL NAMES.

    PROVIDE FINAL, TYPEWRITTEN CIRCUIT DIRECTORIES IN ALL NEW PANELBOARDS.

13. GENERAL WIRING METHODS:

    GENERALLY, UNLESS OTHERWISE INDICATED, WIRING FOR ALL SYSTEMS CALLED FOR IN THESE SPECIFICATIONS AND SHOWN ON DRAWINGS SHALL CONSIST OF INSULATED COPPER CONDUCTORS INSTALLED IN METAL RACEWAY.

    ALL BRANCH CIRCUIT WIRING SHALL BE AWG #12 UNLESS OTHERWISE NOTED. ALL WIRING SHALL BE COPPER, AS SPECIFIED IN SECTION 16120A.

    SIZES #10 AND SMALLER TO BE SOLID CONDUCTOR, LARGER SIZES SHALL BE STRANDED.

    ALL WIRING SHALL BE COLOR CODED TO COMPLY WITH NEC AND PANELS SHALL PROVIDE IDENTIFICATION AS TO CONDUCTOR COLOR CODING.

    PROVIDE SEPARATE GROUND CONDUCTOR IN ALL CIRCUITS.

    ALL SPLICES MADE IN JUNCTION BOXES SHALL BE WATERPROOF. USE U.L. LISTED WATERPROOF MASTIC TO PROTECT CONNECTIONS.

14. LIGHTING:

    FURNISH ALL FIXTURES, LAMPS, AND ACCESSORY EQUIPMENT UNLESS OTHERWISE NOTED. ALL EQUIPMENT TO BEAR U.L. LABEL FOR SERVICE INTENDED. FLUORESCENT EQUIPMENT TO HAVE SELF-CONTAINED BALLASTS, "P" RATED, CBM-ETL CERTIFIED, WITH LOWEST SOUND LEVEL RATING AVAILABLE. BALLASTS SHALL BE ELECTRONIC BALLAST OR AS SPECIFIED ON THE LIGHT FIXTURE SCHEDULE. FIXTURES ARE SCHEDULED ON DRAWINGS.

    UPON COMPLETION OF INSTALLATION OF LIGHTING FIXTURES, AND AFTER BUILDING CIRCUITRY HAS BEEN ENERGIZED, APPLY ELECTRICAL ENERGY TO DEMONSTRATE CAPABILITY AND COMPLIANCE WITH REQUIREMENTS. WHERE POSSIBLE, CORRECT MALFUNCTIONING UNITS AT SITE, THEN RETEST TO DEMONSTRATE COMPLIANCE; OTHERWISE, REMOVE AND REPLACE WITH NEW UNITS AND PROCEED WITH RETESTING. AT THE TIME OF SUBSTANTIAL COMPLETION, REPLACE LAMPS IN INTERIOR LIGHTING FIXTURES WHICH ARE OBSERVED TO BE NOTICEABLY DIMMED AFTER CONTRACTOR'S USE AND TESTING, AS JUDGED BY ARCHITECT.

15. COMMUNICATION SYSTEMS:

    EXISTING COMMUNICATION AND CONTROL SYSTEMS SHALL REMAIN AS-IS. PROTECT SYSTEMS DURING DEMOLITION AND INSTALLATION OF POWER DISTRIBUTION SYSTEM COMPONENTS.

16. MOUNTING HEIGHTS:

    DISCONNECT SWITCHES, MOTOR CONTROLLERS, OPERATOR PANELS, AND OTHER SIMILAR DEVICES AND EQUIPMENT SHALL BE INSTALLED AS HIGH AS POSSIBLE, BUT WILL VARY DEPENDING UPON LOCATION AND WHETHER INDIVIDUALLY OR GROUP MOUNTED. OPERATING LEVERS, HANDLES OR BUTTONS SHALL BE MOUNTED NO MORE THAN 80 INCHES ABOVE THE FINISH FLOOR LINE. PANELBOARDS SHALL BE LOCATED SO THAT THE HIGHEST OVERCURRENT PROTECTIVE DEVICE IS A MAXIMUM OF 72" ABOVE THE FLOOR.

17. TESTING AND BALANCING:

    AT SUCH TIMES AS THE OWNER DIRECTS, THE CONTRACTOR SHALL CONDUCT OPERATING TESTS TO DEMONSTRATE THAT THE ELECTRICAL SYSTEMS ARE INSTALLED AND WILL OPERATE PROPERLY AND IN ACCORDANCE WITH THE REQUIREMENTS OF THESE DOCUMENTS. TESTS SHALL BE PERFORMED IN THE PRESENCE OF THE OWNER. THE CONTRACTOR SHALL FURNISH INSTRUMENTS AND PERSONNEL REQUIRED FOR SUCH TESTS.

    ANY WORK AND MATERIALS TESTED AND FOUND VARYING FROM THE REQUIREMENTS OF THE DRAWINGS AND SPECIFICATIONS SHALL BE REPLACED BY THE CONTRACTOR WITHOUT ADDITIONAL COST TO THE OWNER.

18. RECORD DOCUMENTS:

    MARK RECORD DRAWINGS TO INDICATE REVISIONS TO CONDUIT SIZE AND LOCATION; ACTUAL EQUIPMENT LOCATIONS; CONCEALED EQUIPMENT; DISTRIBUTION AND BRANCH ELECTRICAL CIRCUITRY; FUSE AND CIRCUIT BREAKER SIZE AND ARRANGEMENTS; SUPPORT AND HANGER DETAILS; CHANGE ORDERS; AND CONCEALED DEVICES.

    MARK RECORD SPECIFICATIONS TO INDICATE APPROVED SUBSTITUTIONS; CHANGE ORDERS; ACTUAL EQUIPMENT AND MATERIALS USED.

    PROVIDE THE OWNER WITH OPERATION AND MAINTENANCE DATA FOR ALL EQUIPMENT SUPPLIED.

19. WARRANTY:

    ALL EQUIPMENT / SYSTEMS SHALL BE WARRANTED FREE FROM DEFECTS FOR A PERIOD OF ONE YEAR FOLLOWING THE DATE OF EQUIPMENT / SYSTEM ACCEPTANCE.

MOTOR REWINDING AND RECONDITIONING REQUIREMENTS

1. THE MOTOR'S EXTERIOR SHALL BE TREATED WITH AN ABRASIVE BLAST MAKING SURE ALL OTHER SURFACES, INCLUDING THE NAMEPLATE, ARE PROTECTED FROM DAMAGE.
2. DISASSEMBLE THE MOTOR AND COUNT AND RECORD THE ROTOR BARS.
3. PROVIDE NEW MOTOR WINDINGS. EVALUATE DATA FOR SUITABILITY TO APPLICATIONS- INCLUDING CALCULATION OF ALL FLUX DENSITIES AND PROPER ROTOR BAR/STATOR SLOT COMBINATION.
4. ALL COILS IN NEW FORM WOUND WINDINGS SHALL BE MANUFACTURED ACCORDING TO JOLIET SPECIFICATIONS WHICH INCLUDE GLASS OVER FILM COPPER CONDUCTORS AND TAPED LEADS.
5. NEW FORM WOUND WINDINGS SHALL BE CLASS F VPI PROCESSED USING JOLIET'S EPOX-E-CLAD SYSTEM DOCUMENTING ALL CRITICAL PROCESS PARAMETERS.
6. PERFORM MEGGER OHMMETER TEST TO MEASURE AND RECORD ELECTRICAL RESISTANCE ACCORDING TO IEEE STANDARD 43.
7. CHECK AND RECORD SHAFT RUNOUT.
8. RUN SINGLE-PHASE CHECK TO CHECK FOR AND LOCATE ANY BROKEN ROTOR BARS.
9. APPLY VOLTAGE TO STATOR ON ALL SLIP-RING MOTORS AND CHECK SECONDARY VOLTAGE.
10. PERFORM SURGE COMPARISON TEST ON MOTOR WINDINGS AND DOCUMENT ALL RESULTS.
11. CLEAN ALL MOTOR PARTS WITH A SPECIAL STEAM CEANING PROCESS PERFORMED ON THE STATOR/WINDING, FOLLOWED BY A BAKE CYCLE.
12. PAINT INTERNAL PARTS WITH A UNIQUE INSULATING EPOXY.
13. ONCE BAKING IS COMPLETED, REPEAT MEGGER TEST AND RECORD RESULTS.
14. DIP THE MOTOR WITH A CLASS F VARNISH AND BAKE WINDINGS A FINAL TIME.
15. PROVIDE NEW BEARINGS.
16. MEASURE ALL BEARINGS, SEAL AND COUPLING FITS FOR PROPER TOLERANCE. THE TOLERANCES REQUIRED FOR BALL, ROLLER AND ANGULAR CONTACT BEARINGS SHALL BE AS RECOMMENDED BY THE AFBMA.
17. REPAIR ANY OUT-OF-SPEC MECHANICAL TOLERANCES AND RECORD FINAL DIMENSIONS.
18. BALANCE ROTOR TO LEVELS LOWER THAN THOSE LISTED IN THE NEMA MG-1-1993 SPECIFICATIONS.
19. IF MEGGAR READINGS ARE ACCEPTABLE, RUN THE MOTOR AT NO LOAD AND CHECK CURRENT BALANCE AND VIBRATION DATA.
20. PERFORM A HIGH-POTENTIAL TEST ON THE COMPLETED, ASSEMBLED MOTOR ACCORDING TO IEEE STANDARD.
21. RUN THE MOTOR AT RATED VOLTAGE AND FREQUENCY UNTIL BEARING TEMPERATURES STABILIZE.
22. RECORD BEARING TEMPERATURES, NO-LOAD VOLTS, AMPS AND RPMS.
23. PERFORM VIBRATION ANALYSIS USING IRD 890 EQUIPMENT AT ALL FREQUENCIES TO ESTABLISH A BASELINE. DOCUMENT ALL RESULTS.
24. PAINT MOTOR AND PLACE ON SKID FOR SHIPMENT. BLOCK SLEEVE BEARING MOTOR SHAFTS.

Safety is a Part of Your Contract

This drawing has been reduced to half size

© 2006 IMC 1404A
CONSULTING ENGINEERS
INC
3120 20th STREET
METAIRIE, LOUISIANA 70002

US Army Corps of Engineers New Orleans District

MARK	DESCRIPTION	DATE	APPR.	MARK	DESCRIPTION	DATE	APPR.

U. S. ARMY ENGINEER DISTRICT, NEW ORLEANS
CORPS OF ENGINEERS
NEW ORLEANS, LOUISIANA

DESIGN FILE NAME: J:/4404A/ELEC/E28
SOLICITATION NO. - W912P8-06-B-0034
SUBMITTED BY: J. OSICH
DESIGN ENGINEER
PLOT DATE: 02-17-06
PLOT SCALE: 1=2
DESIGNED BY: RSV
CHECKED BY: KWL
DRAWN BY: KLH
DATE: 02-17-06

INNER HARBOR NAVIGATION CANAL
ORLEANS PARISH, LA.
IHNC ELECTRICAL
ELECTRICAL SPECIFICATIONS

FILE NUMBER
E28

DWG 30 OF 35

Safety is a Part of Your Contract

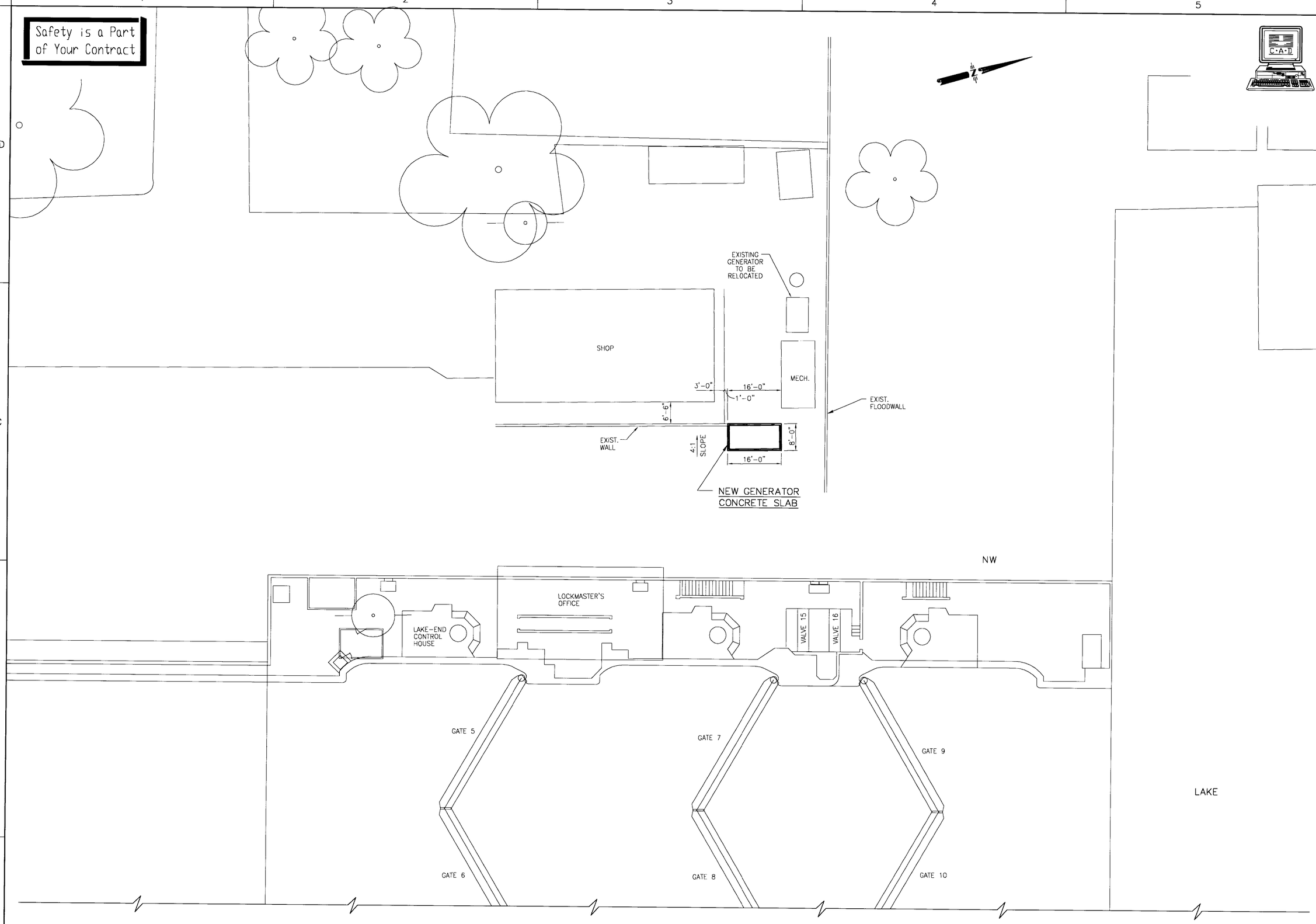

GENERATOR LOCATION PLAN

SCALE: 1" = 10'-0"

10' 0 10' 20' 30' 40'

This drawing has been reduced to half size

FOR CONSTRUCTION
FEB.17, 2006

AIMS GROUP, Inc.
Consulting Engineers
4421 Zenith Street, Metairie, LA 70001
(504) 887-7045

US Army Corps of Engineers
New Orleans District

MARK	DESCRIPTION	DATE	APPR

MARK	DESCRIPTION	DATE	APPR

U. S. ARMY ENGINEER DISTRICT, NEW ORLEANS
CORPS OF ENGINEERS
NEW ORLEANS, LOUISIANA

DESIGNED BY: EAB
CHECKED BY: TRL
DRAWN BY: SJB
DATE: FEB. 06

PLOT SCALE: 1=2
PLOT DATE: 2-17-06

DESIGN FILE NAME: IHNC GEN. PLAN (C1)
SUBMITTED BY: EUGENE BRIAN
DESIGN ENGINEER
SOLICITATION NO. W912P8-06-B-0034

INNER HARBOR NAVIGATION CANAL
ORLEANS PARISH, LA.
IHNC
GENERATOR SLAB
LOCATION PLAN

FILE NUMBER
C1
DWG. 31 OF 35

Safety is a Part of Your Contract

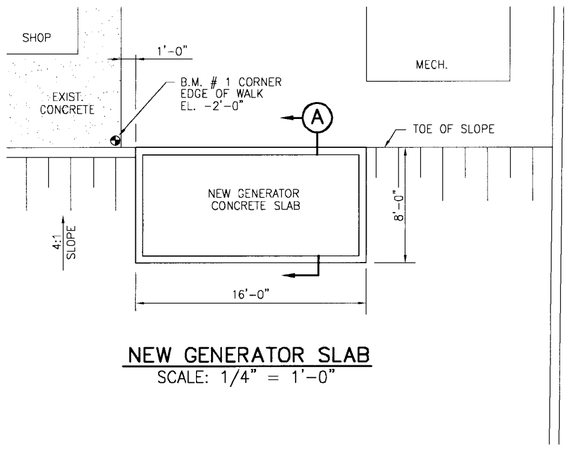

NEW GENERATOR SLAB
SCALE: 1/4" = 1'-0"

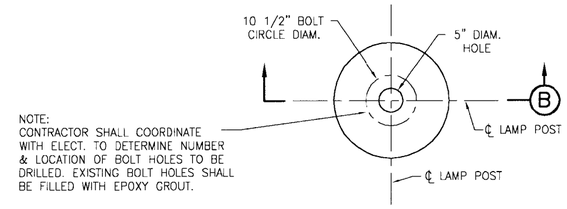

NOTE:
CONTRACTOR SHALL COORDINATE WITH ELECT. TO DETERMINE NUMBER & LOCATION OF BOLT HOLES TO BE DRILLED. EXISTING BOLT HOLES SHALL BE FILLED WITH EPOXY GROUT.

PLAN

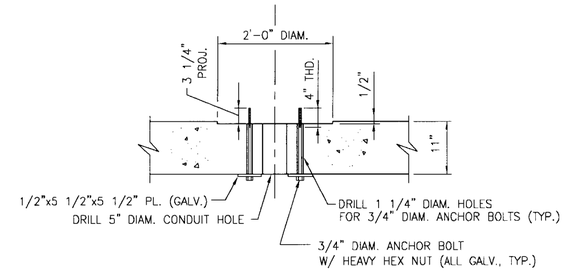

SECTION (B)

LAMP POST ANCHORAGE DETAIL
SCALE: 1" = 1'-0"

NOTES:

1. CONCRETE SHALL HAVE A COMPRESSIVE STRENGTH (fc') = 4,000 psi
2. REINFORCING STEEL SHALL BE GRADE 60 DEFORMED BARS CONFORMING TO ASTM A615.

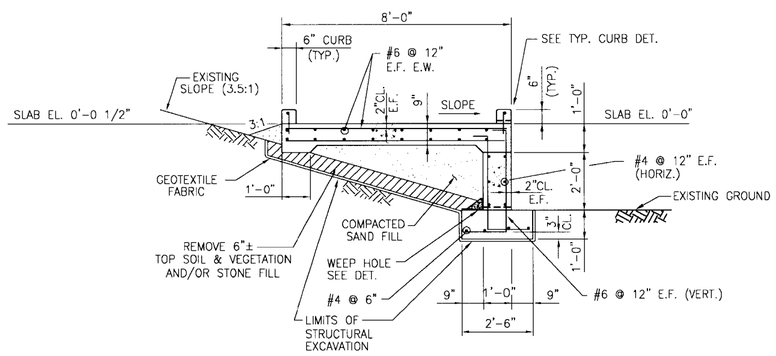

SECTION (A)
SCALE: 1/2" = 1'-0"

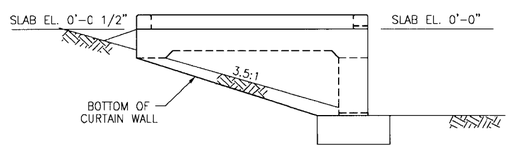

NORTH ELEVATION
SCALE: 1/2" = 1'-0"

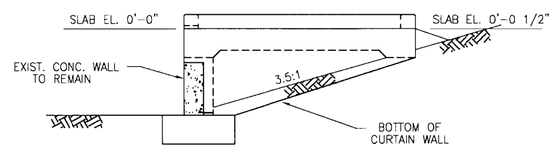

SOUTH ELEVATION
SCALE: 1/2" = 1'-0"

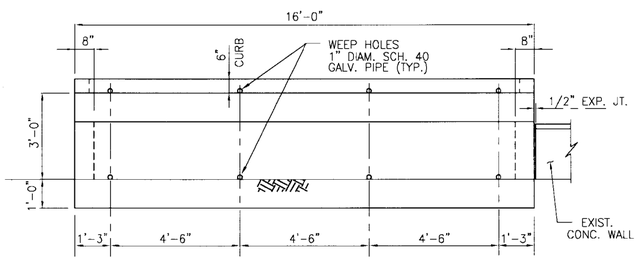

WEST ELEVATION
SCALE: 1/2" = 1'-0"

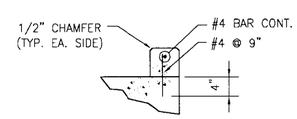

TYP. CURB DET.
SCALE: 1" = 1'-0"

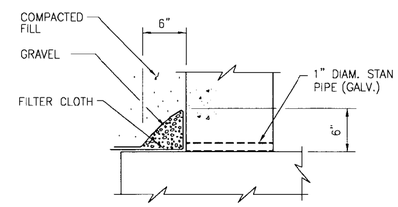

WEEP HOLE
SCALE: 1 1/2"=1'-0"

SCALE: 1/4" = 1'-0"
12" 0 5' 10' 15' 20'

SCALE: 1/2" = 1'-0"
1/2" 0 2' 4' 6' 8'

SCALE: 1" = 1'-0"
12" 0 1' 2' 3' 4'

SCALE: 1 1/2" = 1'-0"
12" 0 1' 2' 3'

This drawing has been reduced to half size

FOR CONSTRUCTION
FEB.17, 2006

AIMS GROUP, Inc.
Consulting Engineers
4421 Zenith Street, Metairie, LA 70001
(504) 887-7045

US Army Corps of Engineers New Orleans District

MARK	DESCRIPTION	DATE	APPR.	MARK	DESCRIPTION	DATE	APPR.

U. S. ARMY ENGINEER DISTRICT, NEW ORLEANS
CORPS OF ENGINEERS
NEW ORLEANS, LOUISIANA
IHNC GEN. SLAB (S1)

DESIGNED BY: EAB
CHECKED BY: TRI
DRAWN BY: SJB
DATE: FEB 06
PLOT SCALE: 1=2
PLOT DATE: 2-17-06
DESIGN FILE NAME:
SUBMITTED BY: ELDRIDGE, BRIAN DESIGN ENGINEER
SOLICITATION NO. W912P8-06-B-0034

INNER HARBOR NAVIGATION CANAL
ORLEANS PARISH, LA.
IHNC
GENERATOR SLAB
SECTIONS & DETAILS

FILE NUMBER S1
DWG. 32 OF 35

Safety is a Part of Your Contract

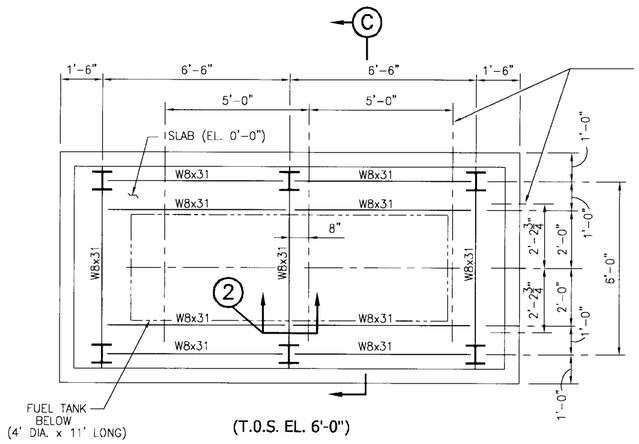

(T.O.S. EL. 6'-0")

STEEL FRAMING PLAN
SCALE: 1/2" = 1'-0"

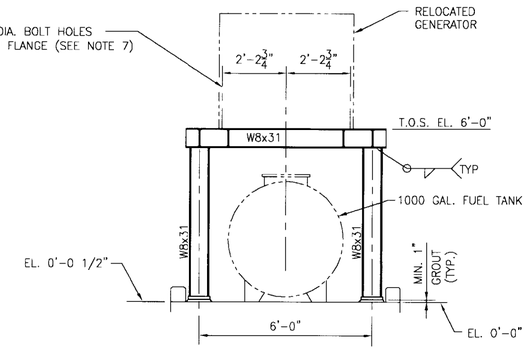

SECTION C
SCALE: 1/2" = 1'-0"

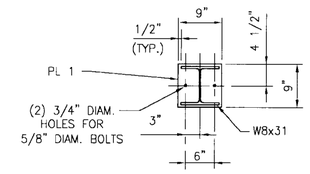

BASE PLATE DET.
SCALE: 1" = 1'-0"

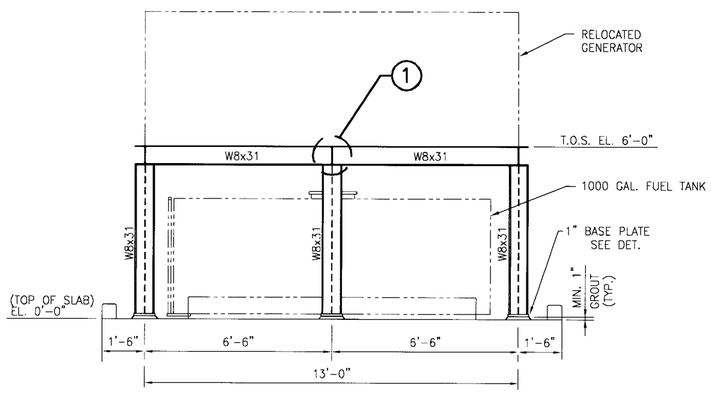

SIDE ELEVATION
SCALE: 1/2" = 1'-0"

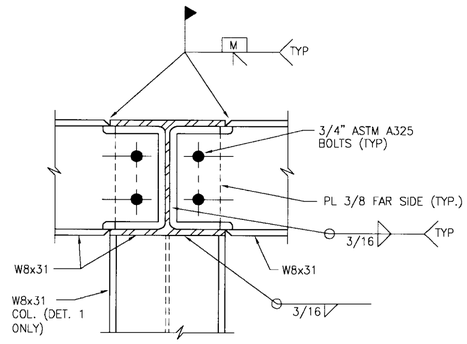

TYP. CONN. DET. 1
SCALE: 3" = 1'-0"

TYP. CONN. DET. 2
SIMILAR AS NOTED

NOTES:

1. STRUCTURAL STEEL SHALL BE ASTM A36. ALL STEEL SHALL BE HOT DIP GALVANIZED.
2. ANCHOR BOLTS SHALL BE HILTI KWIK-BOLT 5/8" DIA. STAINLESS STEEL OR APPROVED EQUAL.
3. FUEL TANK SHALL BE 4'-0" DIAM. x 11'-0" LONG DOUBLE WALL STEEL TANK (MODEL F921 BY B & H TANK CORP., MARION, IOWA OR EQUAL). CAPACITY = 1000 GAL. INSTALLATION PER MANUFACTURER'S REQUIREMENTS.
4. FABRICATION AND ERECTION SHALL BE IN ACCORDANCE WITH THE SPECIFICATIONS AND BY CURRENT STANDARDS OF AMERICAN INSTITUTE OF STEEL CONSTRUCTION.
5. WELDING SHALL MEET REQUIREMENTS OF THE AMERICAN WELDING SOCIETY.
6. GROUT UNDER BASE PLATES SHALL BE NONSHRINK GROUT AS SPECIFIED IN 03307-2.1.6.
7. CONTRACTOR TO VERIFY LOCATIONS OF BOLT HOLES BEFORE DRILLING.

SCALE: 1/2" = 1'-0"
1/2" 0 2' 4' 6' 8'

SCALE: 1" = 1'-0"
12" 0 1' 2' 3' 4'

SCALE: 3" = 1'-0"
12" 6" 0 1'

This drawing has been reduced to half size

FOR CONSTRUCTION
FEB.17, 2006

AIMS GROUP, Inc.
Consulting Engineers
4421 Zenith Street, Metairie, LA 70001
(504) 887-7045

VALUE ENGINEERING — YOUR KEY TO HIGHER PROFITS — INCENTIVE CLAUSES

US Army Corps of Engineers New Orleans District

MARK	DESCRIPTION	DATE	APPR.	MARK	DESCRIPTION	DATE	APPR.

U. S. ARMY ENGINEER DISTRICT, NEW ORLEANS
CORPS OF ENGINEERS
NEW ORLEANS, LOUISIANA

DESIGNED BY: EAB
CHECKED BY: TRL
DRAWN BY: SJB
DATE: FEB 06
PLOT SCALE: 1=2
PLOT DATE: 2-17-06
DESIGN FILE NAME: IHNC STEEL SUP (S2)
SUBMITTED BY: EUGENE BRIAN — DESIGN ENGINEER
SOLICITATION NO. W912PB-06-B-0034

INNER HARBOR NAVIGATION CANAL
ORLEANS PARISH, LA.
IHNC
GENERATOR
STEEL SUPPORTS

FILE NUMBER S2
DWG. 33 OF 35

Safety is a Part of Your Contract

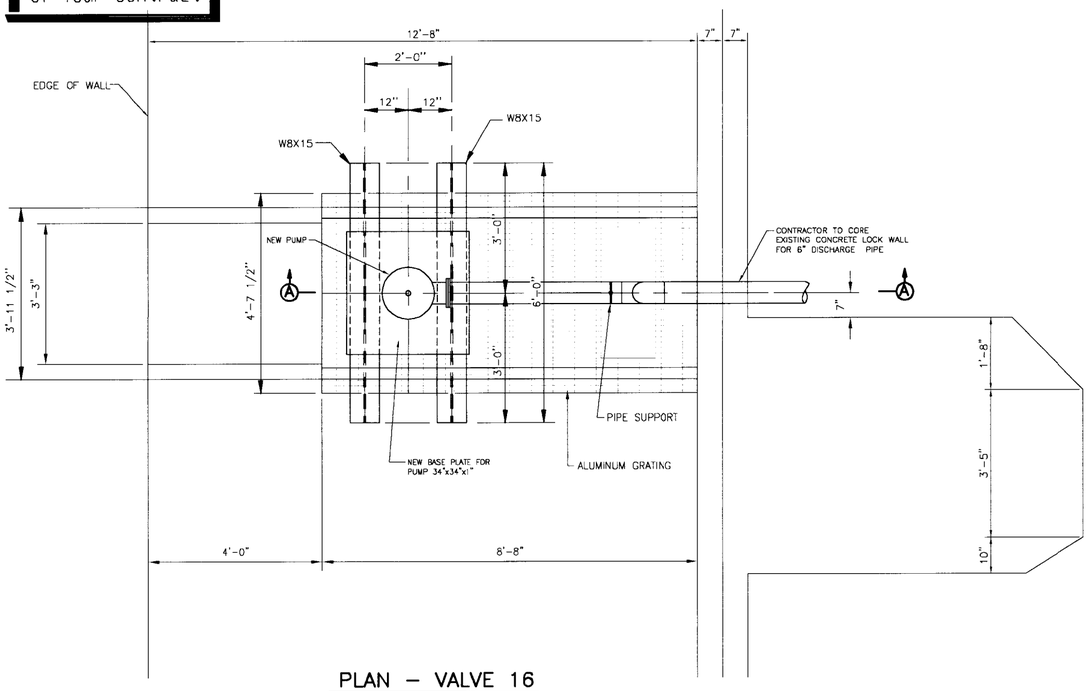

PLAN – VALVE 16

SCALE: 3/4"=1'-0"

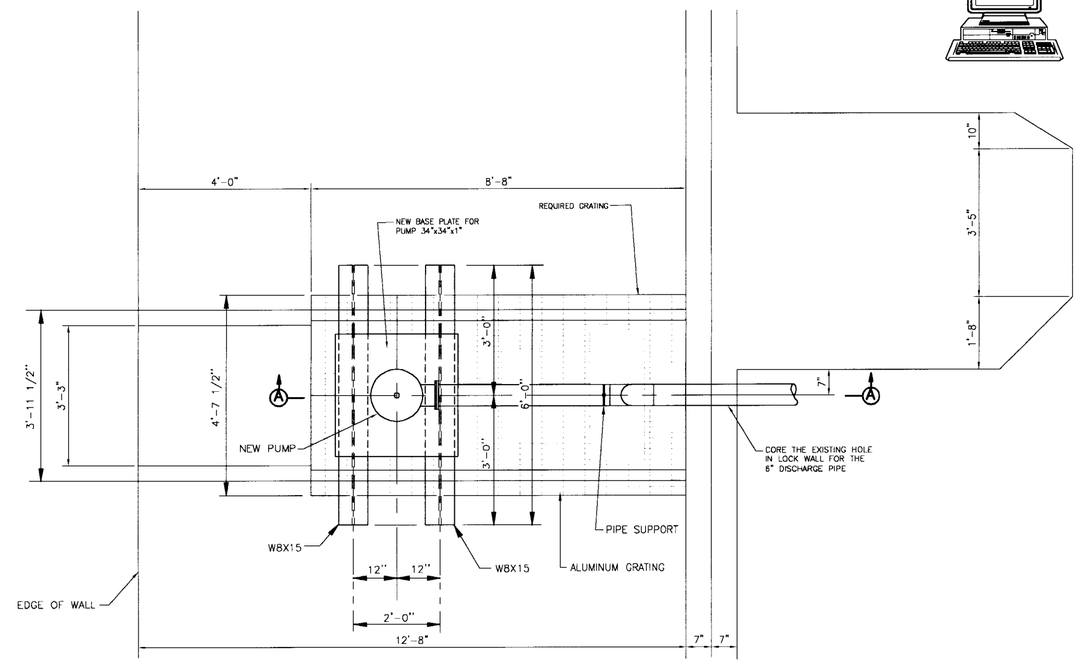

PLAN – VALVE 18

SCALE: 3/4"=1'-0"

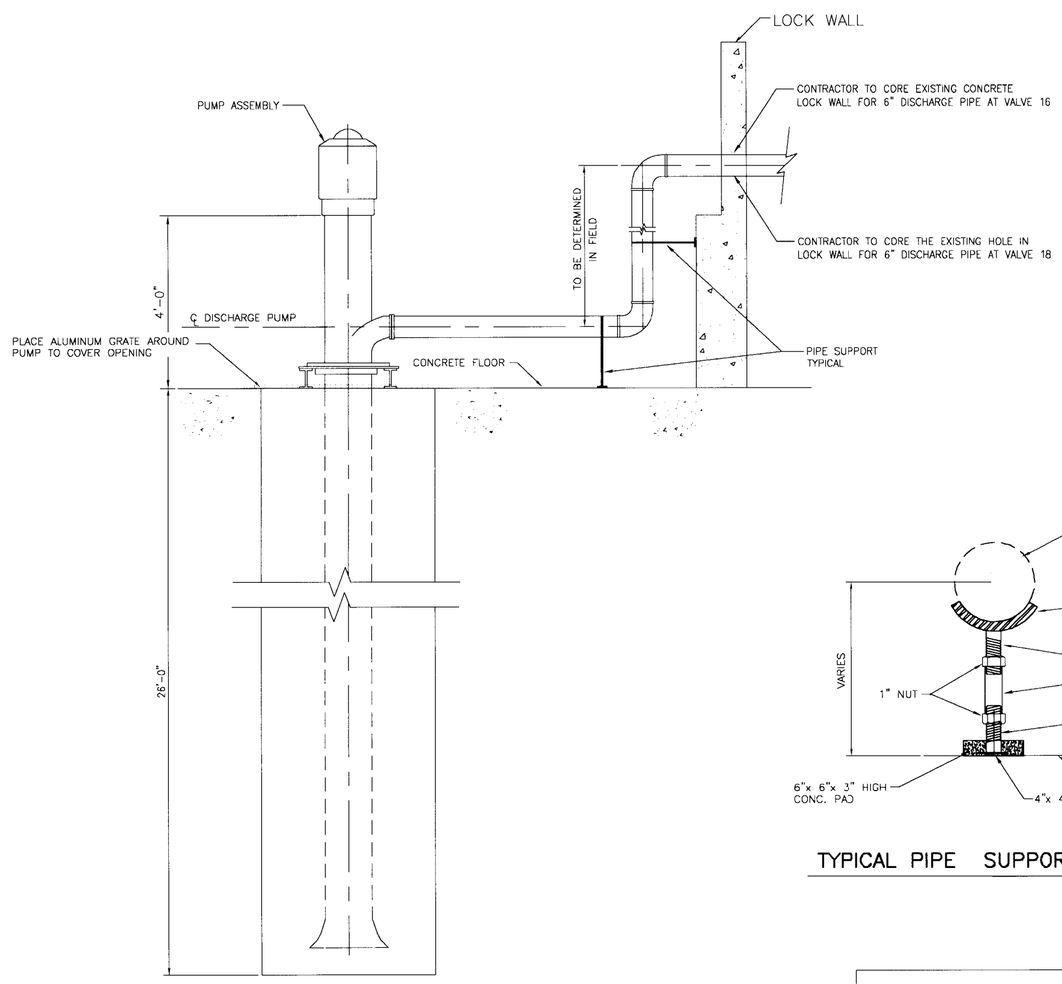

SECTION (A)

SCALE: 3/4"=1'-0"

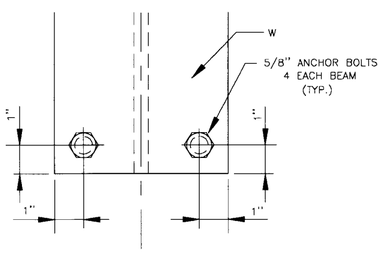

TYPICAL ANCHOR DETAIL

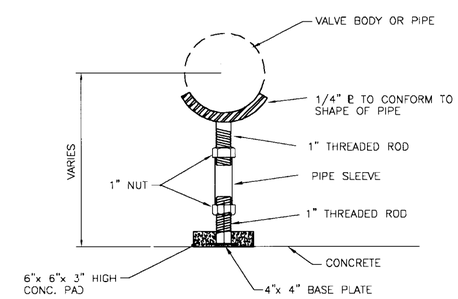

TYPICAL PIPE SUPPORT DETAIL

This drawing has been reduced to half size

FOR CONSTRUCTION
FEB.17, 2006

Brown Cunningham Gannuch
ENGINEERS ARCHITECTS CONSULTANTS
2701 KINGMAN ST. METAIRIE, LOUISIANA

VALUE INCENTIVE AWARDS ENGINEERING YOUR KEY TO HIGHER PROFITS

US Army Corps of Engineers New Orleans District

MARK	DESCRIPTION	DATE	APPR.	MARK	DESCRIPTION	DATE	APPR.

U. S. ARMY ENGINEER DISTRICT, NEW ORLEANS
CORPS OF ENGINEERS
NEW ORLEANS, LOUISIANA

DESIGNED BY: CH
CHECKED BY: WHB
DRAWN BY: JSB
DATE: FEB. 06

PLOT SCALE: 1=2
PLOT DATE: 2-17-06

DESIGN FILE NAME: IHNC MECHANICAL M1
SUBMITTED BY: CHRIS HERNANDEZ, DESIGN ENGINEER
SOLICITATION NO. W912P8-06-B-0034

INNER HARBOR NAVIGATION CANAL
ORLEANS PARISH, LA.

VALVE 16 AND VALVE 18
DETAILS

FILE NUMBER
M1

DWG. 34 OF 35

Safety is a Part of Your Contract

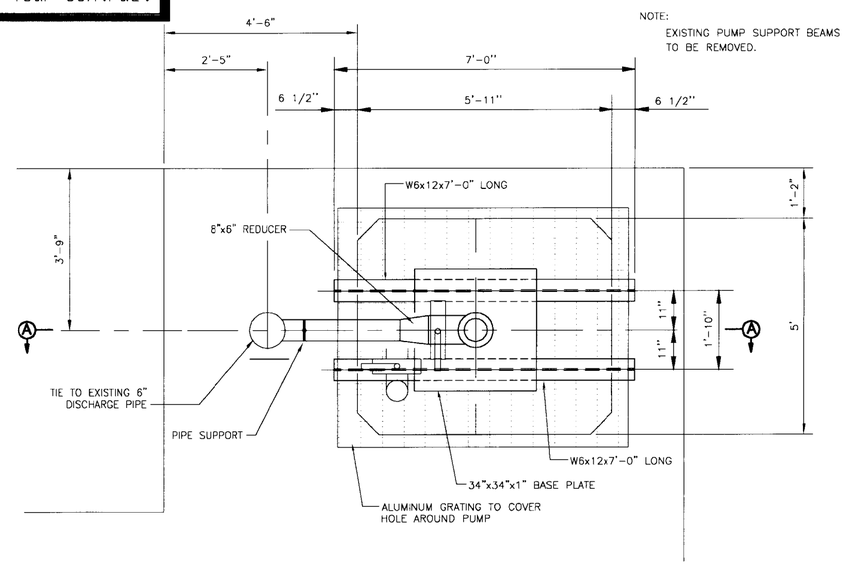

PLAN – SOUTH SUMP PUMP

SCALE: 3/4"=1'-0"

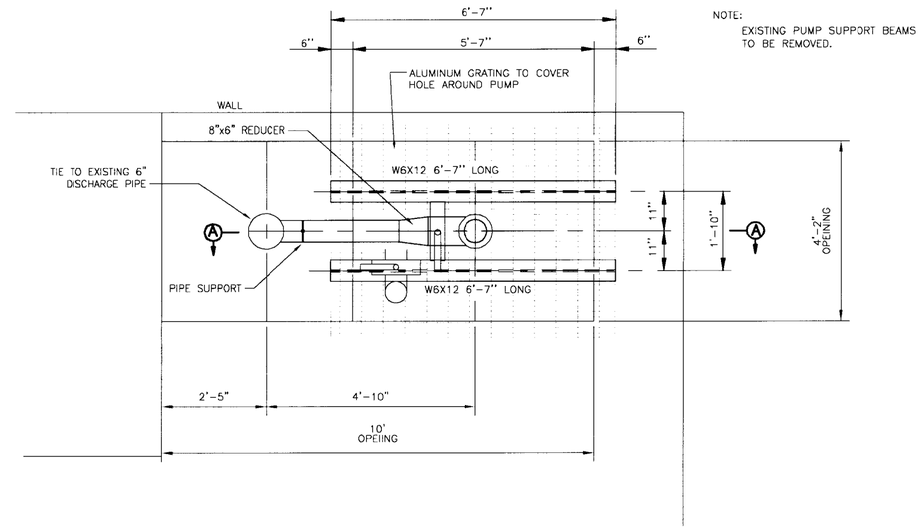

PLAN – NORTH SUMP PUMP

SCALE: 3/4"=1'-0"

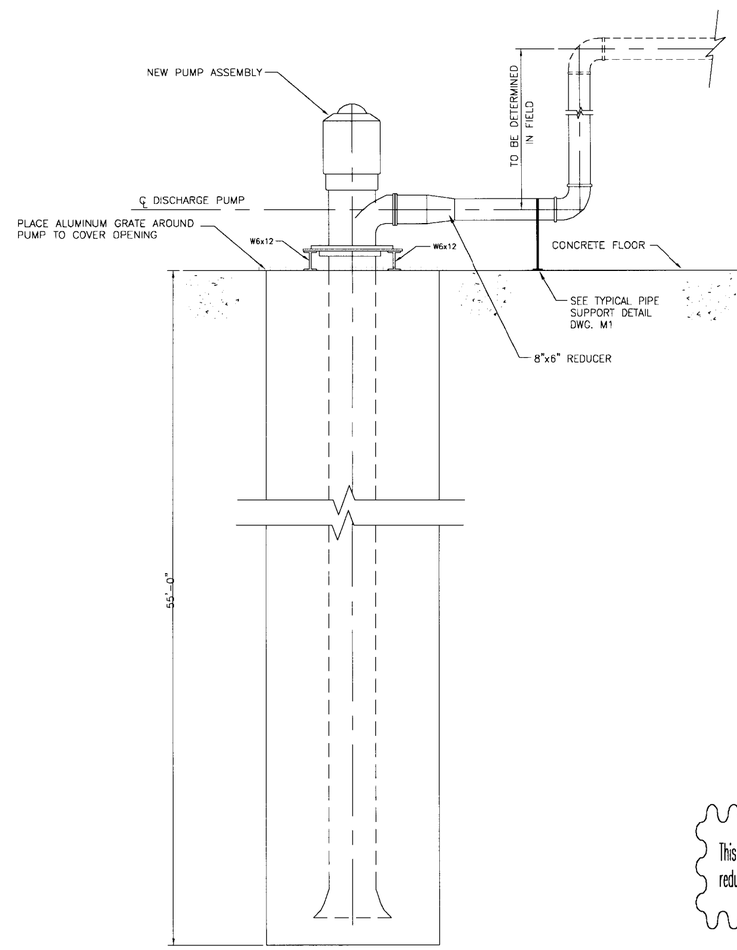

SECTION (A)

SCALE: 3/4"=1'-0"

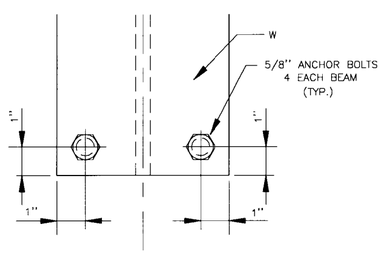

TYPICAL ANCHOR DETAIL

This drawing has been reduced to half size

FOR CONSTRUCTION
FEB.17, 2006

Brown Cunningham Gannuch
ENGINEERS ARCHITECTS CONSULTANTS
2701 KINGMAN ST. METAIRIE, LOUISIANA

US Army Corps of Engineers New Orleans District

MARK	DESCRIPTION	DATE	APPR

MARK	DESCRIPTION	DATE	APPR

U. S. ARMY ENGINEER DISTRICT, NEW ORLEANS
CORPS OF ENGINEERS
NEW ORLEANS, LOUISIANA

DESIGNED BY: CH
CHECKED BY: WHB
DRAWN BY: JSB
DATE: FEB. 06
PLOT SCALE: 1=2
PLOT DATE: 2-17-06
DESIGN FILE NAME: IHNC MECHANICAL M1
SUBMITTED BY: CARLOS HERNANDEZ DESIGN ENGINEER
SOLICITATION NO. W912PB-06-B-0034

INNER HARBOR NAVIGATION CANAL
ORLEANS PARISH, LA.

SUMP PUMP DETAILS

FILE NUMBER M2
DWG. 35 OF 35

VALUE INDEXING GUIDES ENGINEERING YOUR KEY TO HIGHER PROFITS