Safety is a Part of Your Contract

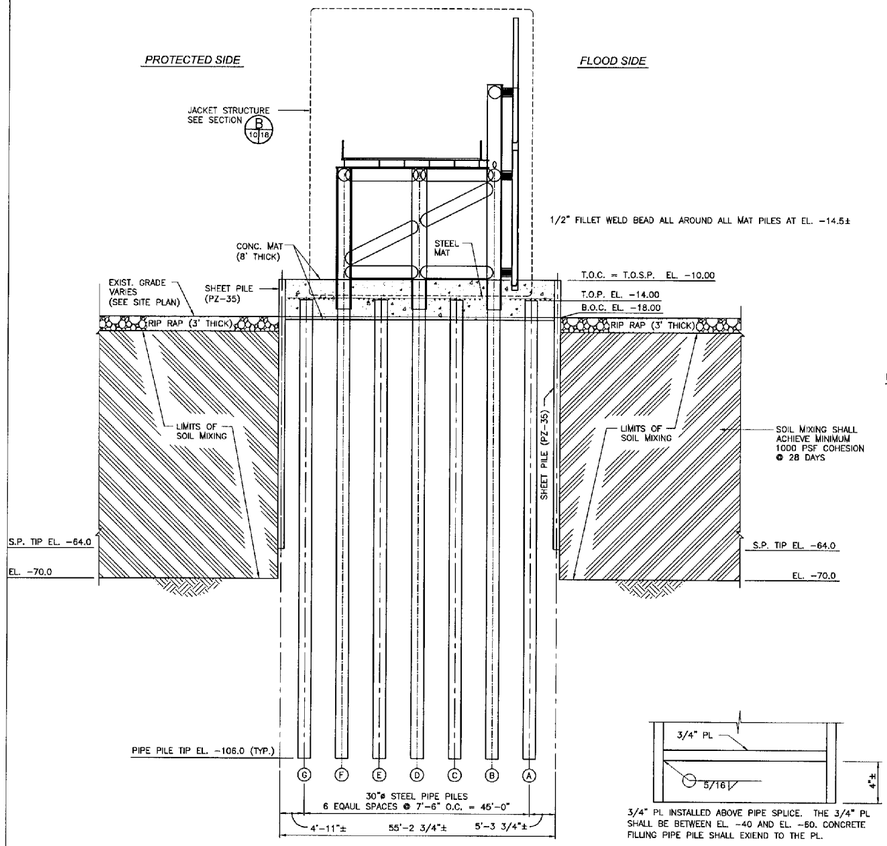

SECTION A 8/10

SCALE: 1/8" = 1'-0"

ESTIMATED QUANTITY OF PILES FOR MAT IS 8,512 LIN FT (FOR INFORMATION ONLY)

3/4" PL INSTALLED ABOVE PIPE SPLICE. THE 3/4" PL SHALL BE BETWEEN EL. -40 AND EL. -60. CONCRETE FILLING PIPE PILE SHALL EXIEND TO THE PL.

PILE CONCRETE DIAPHRAGM

NO SCALE

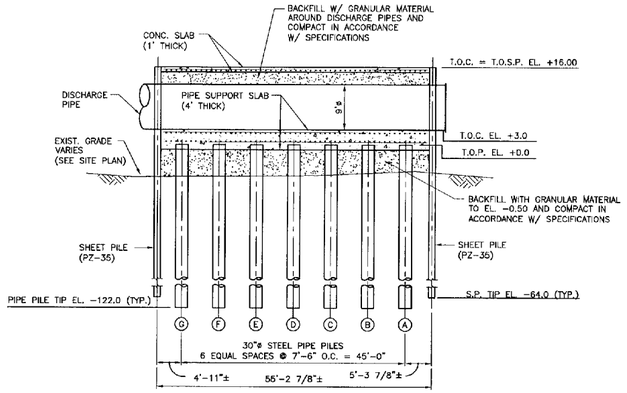

SECTION B 8/10

SCALE: 1/8" = 1'-0"

ESTIMATED QUANTITY OF PILES FOR END CELL IS 1,708 LIN FT (FOR INFORMATION ONLY)

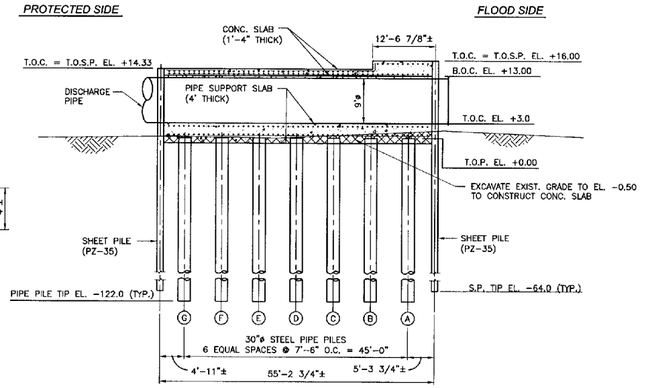

SECTION C 8/10

SCALE: 1/8" = 1'-0"

ESTIMATED QUANTITY OF PILES FOR END CELL IS 1,708 LIN FT (FOR INFORMATION ONLY)

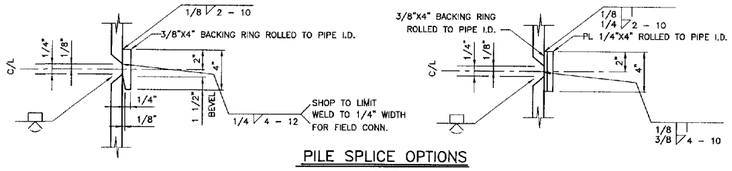

PILE SPLICE OPTIONS

NO SCALE

SCALE: 1/8" = 1'-0"

8' 4' 0 8' 16' 24' 32' 40'

NOTE: THIS DRAWING HAS BEEN REDUCED TO HALF SIZE.

LINFIELD, HUNTER & JUNIUS, INC.
CONSULTING ENGINEERS AND ARCHITECTS
3408 18th Street, Suite 200
Metairie, Louisiana 70002

US Army Corps of Engineers New Orleans District

MARK	DESCRIPTION	DATE	APPR.	DESCRIPTION	DATE	APPR.

U. S. ARMY ENGINEER DISTRICT, NEW ORLEANS
CORPS OF ENGINEERS
NEW ORLEANS, LOUISIANA

DESIGNED BY: LJJ
DETAILED BY: LJJ
DRAWN BY: LJJ
DATE: 05-26-06

PLOT SCALE: 1
PLOT DATE:

DESIGN FILE NAME:
SUBMITTED BY: ANGEL M. ARCILA, JR.
DESIGN MANAGER:

SOLICITATION NO.

LAKE PONTCHARTRAIN AND VICINITY
INTERIM CLOSURE STRUCTURE
17TH STREET CANAL
NEW ORLEANS, LOUISIANA
FOUNDATION SECTIONS

FILE NUMBER

DWG. 10 OF 34

LAKE PONTCHARTRAIN AND VICINITY
NEW ORLEANS PLAN
EMERGENCY RESTORATION
17TH STREET, LONDON AVE. & ORLEANS AVE. CANALS
SCADA & CCTV INSTALLATION
17th STREET CLOSURE STRUCTURE
REFERENCE DWG. 3
ORLEANS PARISH, LA.

U.S. ARMY ENGINEER DISTRICT, NEW ORLEANS
CORPS OF ENGINEERS
NEW ORLEANS, LOUISIANA

DRAWN BY: T.J.T.	PLOT SCALE: 100	CADD FILE: CABLE18.DGN
CHECKED BY: D.F.B.	DWG. R3 OF R13	FILE NO. X
DATE: MAR 2006		