JOINT PUBLIC NOTICE

April 4, 2016

United States Army
Corps of Engineers
New Orleans District
Attn: Regulatory Branch
Post Office Box 60267
New Orleans, Louisiana 70160-0267

State of Louisiana
Department of Environmental Quality
Attn: Water Quality Certification Sec.
Post Office Box 4313
Baton Rouge, Louisiana 70821-4313

Project Manager: Dirreen Arnold
(504) 862-2301 / fax: (504) 862-2574
dirreen.s.arnold@usace.army.mil
Permit Application Number:
MVN-2016-00397-CA

Project Manager:
Elizabeth Hill
(225) 219-3225 / fax: (225) 219-3156
WQC Application Number:
WQC-160317-02

Interested parties are hereby notified that a permit application has been received by the New Orleans District of the US Army Corps of Engineers pursuant to: [**X**] Section 10 of the Rivers and Harbors Act of March 3, 1899 (30 Stat. 1151; 33 USC 403); and/or [**X**] Section 404 of the Clean Water Act (86 Stat. 816; 33 USC 1344).

Application has also been made to the Louisiana Department of Environmental Quality, Office of Environmental Services, for a Water Quality Certification (WQC) in accordance with statutory authority contained in LRS 30:2074 A(3) and provisions of Section 401 of the Clean Water Act.

DREDGE AN ACCESS CHANNEL AND WELL SLIP FOUR LEAGUE BAY IN TERREBONNE PARISH

NAME OF APPLICANT: CASTEX ENERGY, c/o Blue Ox Environmental, 2851 Johnston Street, Suite 1803, Lafayette, Louisiana 70503

LOCATION OF WORK: Four League Bay, approximately 20 miles west from Cocodrie, Louisiana, (29.321614, -91.142017), in Sections 6, 7, 8, 17 and 18, Township 20 South, Range 13 East, in Terrebonne Parish, as shown on the enclosed drawings, within Hydrologic Unit Code 08090302, West Central Louisiana Coastal.

CHARACTER OF WORK: The applicant has requested Department of the Army authorization to bucket dredge an access channel in order to place a drilling barge on location and install and maintain a rock pad, two well head protectors and appurtenant structures, all to drill and produce the Four League Bay South Prospect and Four League South SWD Wells. The access channel length is 13,310-ft long x 70-ft wide. Approximately 121,450 cubic yards of water bottoms will be excavated and the staggered spoil will be placed 70-ft wide x 200-ft long x 5-ft height with 100-ft gaps along the access route. Spoil markers will be installed every 300 feet. A 70-ft wide x 250-ft long x 1-ft deep rock pad will be installed at the well site. The entire site is located in open waters and no adverse impacts to wetlands will be affected by this project.

It is presumed that the applicant has designed the project to avoid and minimize direct and secondary adverse impacts to the maximum extent practicable.

The comment period for the Department of the Army Permit and the Louisiana Department of Environmental Quality WQC will close **20 days** from the date of this joint public notice. Written comments, including suggestions for modifications or objections to the proposed work, stating reasons thereof, are being solicited from anyone having interest in this permit and/or this WQC request and must be submitted so as to be received before or by the last day of the comment period. Letters concerning the Corps of Engineers permit application must reference the applicant's name and the Permit Application Number, and be forwarded to the Corps of Engineers at the address above, **ATTENTION: REGULATORY BRANCH**. Similar letters concerning the Water Quality Certification must reference the applicant's name and the WQC application number and be mailed to the Louisiana Department of Environmental Quality at the address above. Individuals or parties may request an extension of time in which to comment on the proposed work by writing, faxing, or e-mailing the Corps of Engineers Project Manager listed above. Any request must be specific and substantively supportive of the requested extension, and received by this office prior to the end of the initial comment period. The Section Chief will review the request and the requestor will be promptly notified of the decision to grant or deny the request. If granted, the time extension will be continuous to the initial comment period and, inclusive of the initial comment period, will not exceed a total of 30 calendar days.

The application for this proposed project is on file with the Louisiana Department of Environmental Quality and may be examined during weekdays between 8:00 a.m. and 4:30 p.m. Copies may be obtained upon payment of costs of reproduction.

Corps of Engineers Permit Criteria

The decision whether to issue a permit will be based on an evaluation of the probable impacts, including cumulative impacts of the proposed activity on the public interest. That decision will reflect the national concern for both protection and utilization of important resources. The benefit which reasonably may be expected to accrue from the proposal must be balanced against its reasonably foreseeable detriments. All factors which may be relevant to the proposal will be considered including the cumulative effects thereof; among those are conservation, economics, aesthetics, general environmental concerns, wetlands, historic properties, fish and wildlife values, flood hazards, floodplain values, land use, navigation, shoreline erosion and accretion, recreation, water supply and conservation, water quality, energy needs, safety, food and fiber production, mineral needs, considerations of property ownership and, in general, the needs and welfare of the people.

The U.S. Army Corps of Engineers is soliciting comments from the public, federal, state, and local agencies and officials, Indian Tribes, and other interested parties in order to consider and evaluate the impacts of this proposed activity. Any comments received will be considered by the U.S. Army Corps of Engineers to determine whether to make, modify, condition, or deny a permit for this proposal. To make this decision, comments are used to assess impacts on endangered species, historic properties, water quality, general environmental effects, and other public interest factors listed above. Comments are used in the preparation of an Environmental Assessment and/or an Environmental Impact Statement pursuant to the National Environmental Policy Act. Comments are also used to determine the need for a public hearing and to determine the overall public interest of the proposed activity.

The New Orleans District is unaware of properties listed on the National Register of Historic Places near the proposed work. The possibility exists that the proposed work may damage or destroy presently unknown archeological, scientific, pre-historical, historical sites, or data. Issuance of this public notice solicits input from the State Archeologist and State Historic Preservation Officer regarding potential impacts to cultural resources.

The New Orleans District has determined that the proposed project is located within waters known to be occupied by the endangered West Indian Manatee (*Trichechus manatus*) and determined with the inclusion of the Standard Manatee Conditions for In-Water Activities the proposed activity is not likely to adversely affect the species based on the Standard Local Operating Procedure for Endangered Species in Louisiana (SLOPES), dated October 22, 2014, between the U.S. Army Corps of Engineers, New Orleans and U.S. Fish and Wildlife Service, Ecological Services Office.

This notice initiates the Essential Fish Habitat (EFH) consultation requirements of the Magnuson-Stevens Fishery Conservation and Management Act. The applicant's proposal may result in the destruction or alteration of 28.5 acres of EFH utilized by various life stages of red drum and penaeid shrimp. Our initial determination is that the proposed action would not have a substantial adverse impact on EFH or federally managed fisheries in the Gulf of Mexico. Our final determination relative to project impacts and the need for mitigation measures is subject to review by and coordination with the National Marine Fisheries Service.

If the proposed work involves deposits of dredged or fill material into navigable waters, the evaluation of the probable impacts will include the application of guidelines established by the Administrator of the Environmental Protection Agency. Also, a certification that the proposed activity will not violate applicable water quality standards will be required from the Department of Environmental Quality, before a permit is issued.

Any person may request, in writing, within the comment period specified in this notice, that a public hearing be held to consider this application. Requests for public hearings shall state, with particularity, the reasons for holding a public hearing. You are requested to communicate the information contained in this notice to any other parties whom you deem likely to have interest in the matter.

The applicant has certified that the proposed activity described in the application complies with and will be conducted in a manner that is consistent with the Louisiana Coastal Resources Program. The Department of the Army permit will not be issued unless the applicant received approval or a waiver of the Coastal Use Permit by the Department of Natural Resources.

JOHN M. HERMAN
Chief, Central Evaluation Section
Regulatory Branch

Enclosure

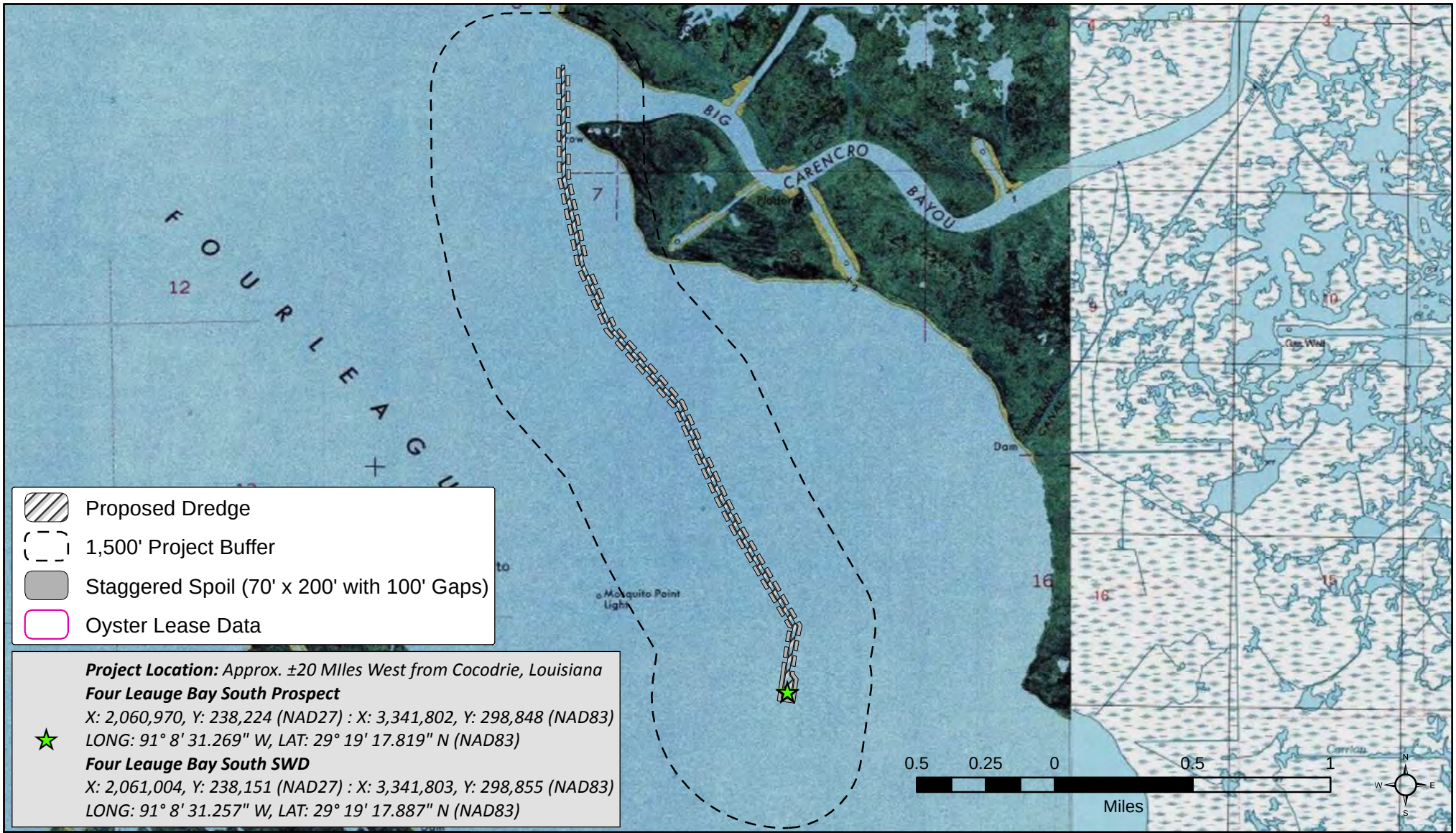

Project Location: *Approx. ±20 MIles West from Cocodrie, Louisiana*

Four Leauge Bay South Prospect

X: 2,060,970, Y: 238,224 (NAD27) : X: 3,341,802, Y: 298,848 (NAD83)

LONG: 91° 8' 31.269" W, LAT: 29° 19' 17.819" N (NAD83)

Four Leauge Bay South SWD

X: 2,061,004, Y: 238,151 (NAD27) : X: 3,341,803, Y: 298,855 (NAD83)

LONG: 91° 8' 31.257" W, LAT: 29° 19' 17.887" N (NAD83)

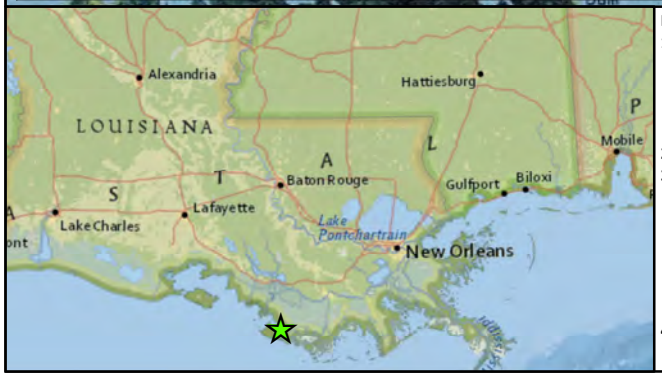

NOTES

1) All Structures, Facilities, well and pipelines/flowlines shall be removed within 120 days of abandonment of the facilities for the herein permitted use. This condition does not preclude the necessity for revising the current permit or obtaining a separate Coastal Use Permit, should one be required, for such removal activities.
2) All structures will be marked and lighted in accordance with US Coast Guard regulations.
3) As-Built drawings shall be submitted within 30 days of completion of this project to the Louisiana Department of Natural Resources, Office of Pipeline Safety, PO Box 94275, Baton Rouge, LA 70804, and to the Louisiana Department of Natural Resources, Office of Coastal Management, PO Box 44487, Baton Rouge, LA 70804-4487 and to Louisiana Land and Exploration Company, P.O Box 7097, Houma, Louisiana 70361-7097.
4) Permittee shall contact Louisiana ONE CALL at 1-800-272-3020 forty-eight hours prior to excavation or demolition.

Castex Energy, Inc.

Proposed Well Locations, Dredging, Rock Pad & Structures to Drill the Four League Bay South Prospect

SECS 6, 7, 8, 17, & 18 T20S-R13E

Terrebonne Parish, Louisiana

BLUE OX ENVIRONMENTAL PLANNING SERVICES, LLC

Job Number: 15123

Rev: (date/initial)	Created by: KFM
03-04-2016/KFM	Date: 02/26/2016
03-09-2016/KFM	PAGE 1 OF 3

NOTE: The contents of these plans are intended exclusively for the purpose of obtaining environmental compliance permits and are not construction drawings.

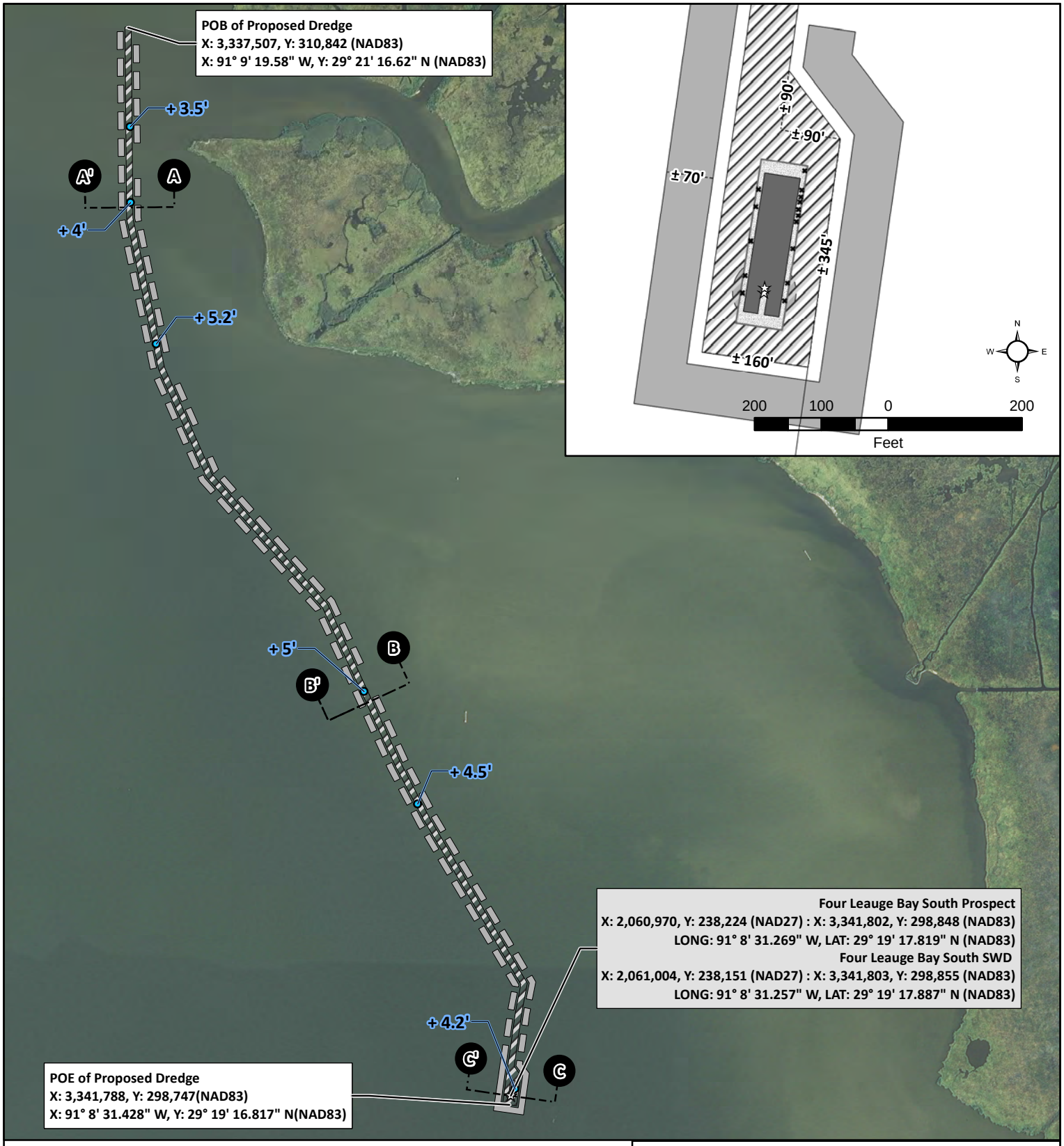

1,500 750 0 1,500 3,000

Feet

N W E S

Proposed Dredge (Dredge Length = ± 13,310')

Staggered Spoil (70' x 200' with 100' Gaps)

Water Depth — *Water depth obtained from T. Baker Smith survey dated 12-01-2015 (Adjusted to 0.0' MLLWL)*

Castex Energy, Inc.

Proposed Well Locations, Dredging, Rock Pad & Structures to Drill the Four League Bay South Prospect

SECS 6, 7, 8, 17, & 18 T20S-R13E
Terrebonne Parish, Louisiana

BLUE OX ENVIRONMENTAL PLANNING SERVICES, LLC

Job Number: 15123

Rev: (date/initial)
03-04-2016/KFM
03-09-2016/KFM

Created by: KFM
Date: 02/26/2016

NOTE: The contents of these plans are intended exclusively for the purpose of obtaining environmental compliance permits and are not construction drawings.

Cross Section A - A'

No Scale

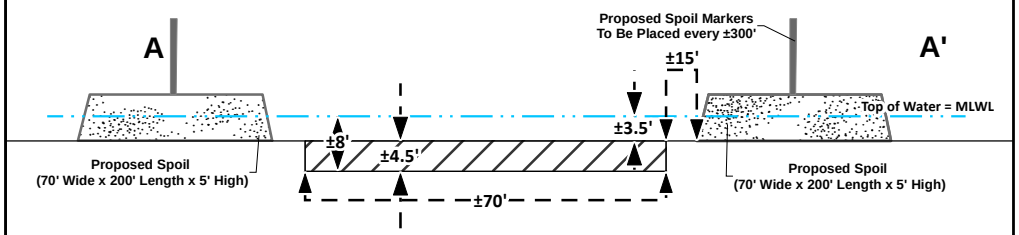

Cross Section B - B'

No Scale

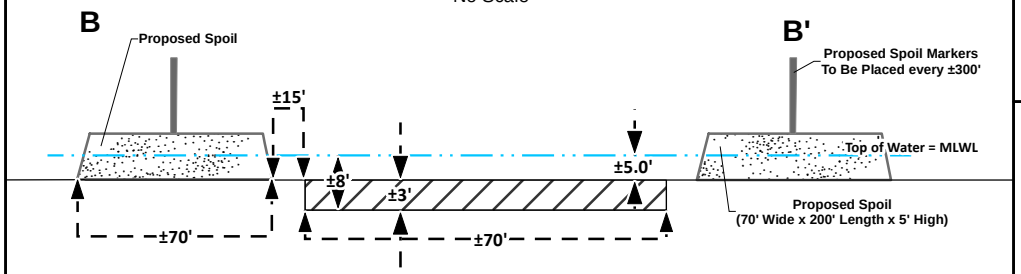

Cross Section C - C'

No Scale

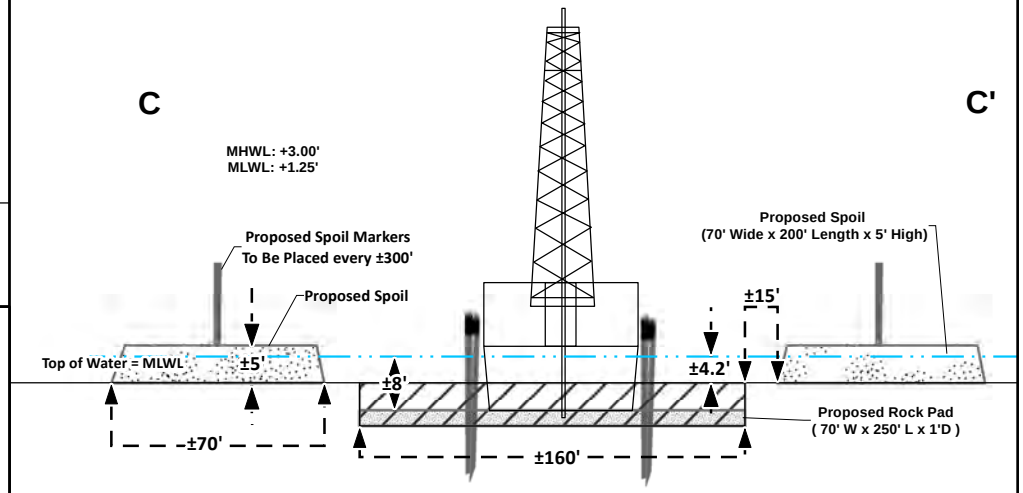

Typical Well Structure Plan View

No Scale

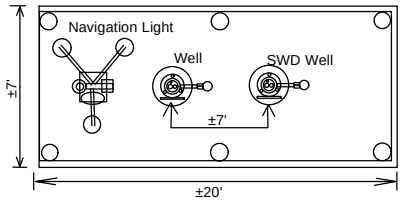

Typical Well Structure Profile View

No Scale

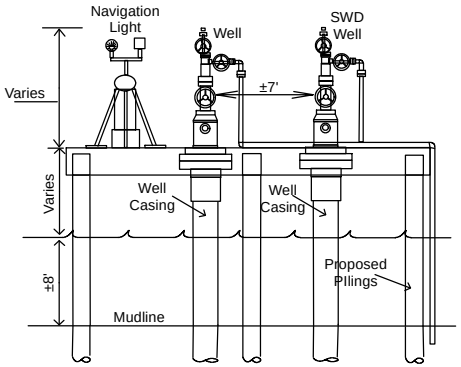

Typical Drill Barge

Not to Scale

Plan View

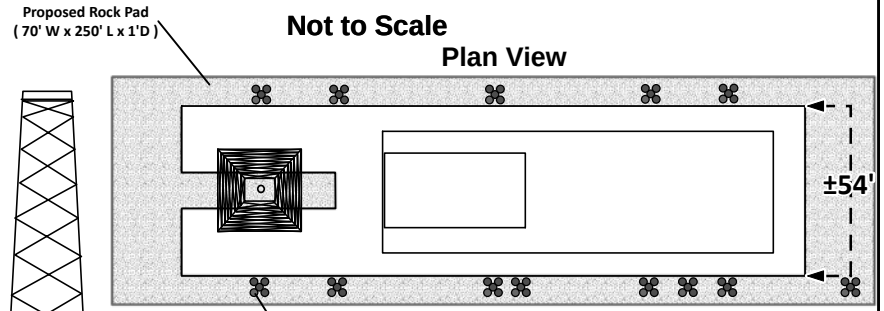

Thirteen (13) temporary five (5) pile clusters to be driven to assist in removing drill barge from location. Temporary clusters to be removed when permanent well guard in installed.

Elevation View

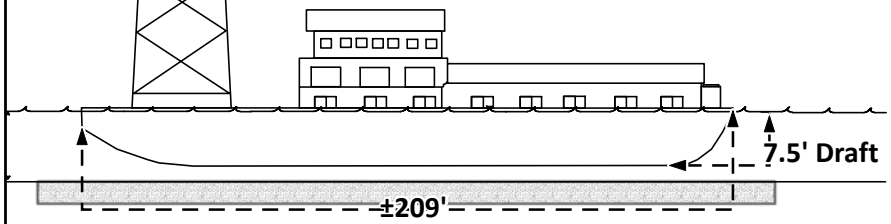

Project Impact Summary	
Excavation (Native Water Bottoms)	
±22.2	Acres of Proposed Bucket Dredging
±121,450'	Cubic Yards of Proposed Bucket Dredging
Fill	
±28.5	Acres of Proposed Bucket Dredge Fill
±121,450'	Cubic Yards of Native Material
±648	Cubic Yards of Rock

Castex Energy, Inc.

Proposed Well Locations, Dredging, Rock Pad & Structures to Drill the Four League Bay South Prospect

SECS 6, 7, 8, 17, & 18 T20S-R13E

Terrebonne Parish, Louisiana

BLUE OX ENVIRONMENTAL PLANNING SERVICES, LLC

Job Number: 15123

Rev: (date/initial)
03-04-2016/KFM
03-09-2016/KFM

Created by: KFM
Date: 02/26/2016

NOTE: The contents of these plans are intended exclusively for the purpose of obtaining environmental compliance permits and are not construction drawings.