JOINT PUBLIC NOTICE

March 2, 2015

United States Army Corps of Engineers
New Orleans District
Regulatory Branch
Post Office Box 60267
New Orleans, Louisiana 70160-0267

(504) 862-1301
Project Manager
Neil T. Gauthier
Neil.T.Gauthier@USACE.army.mil
MVN 2014-01035-CM

State of Louisiana
Department of Environmental Quality
Office of Environmental Services
Post Office Box 4313
Baton Rouge, Louisiana 70821-4313

(225) 219-3225
Project Manager
Elizabeth Johnson
WQC Application Number
150224-01

Interested parties are hereby notified that a permit application has been received by the New Orleans District of the US Army Corps of Engineers pursuant to: [X] Section 10 of the Rivers and Harbors Act of March 3, 1899 (30 Stat. 1151; 33 USC 403); and/or [X] Section 404 of the Clean Water Act (86 Stat. 816; 33 USC 1344).

Application has also been made to the Louisiana Department of Environmental Quality, Office of Environmental Services, for a Water Quality Certification (WQC) in accordance with statutory authority contained in LRS 30:2074 A(3) and provisions of Section 401 of the Clean Water Act.

Proposed Dirt Pit Expansion in the Batture of the Mississippi River in West Baton Rouge Parish

NAME OF APPLICANT: Perrault's Trucking, c/o Morris P. Hebert, Inc., Attn: Timothy Robertson, 10343 Siegen Lane, Suite 4B, Baton Rouge, Louisiana 70810.

LOCATION OF WORK: In the batture of the Mississippi River on the right descending bank at mile point 226.5, Section 5, T8S-R12E, approximately 3 miles south of Port Allen, Louisiana, in West Baton Rouge, within the Lower Mississippi-Baton Rouge River Basin in hydrologic unit (HUC 08070100), as shown on the attached drawings.

The work described below was partially completed prior to obtaining a Department of the Army permit and was in violation of Section 301 of the Clean Water Act. All legal issues concerning the unauthorized work have since been deferred.

CHARACTER OF WORK: The applicant has requested Department of the Army authorization to clear and excavate an area of the Mississippi River batture for dirt to be sold and used as building base for local construction projects. Part of this area is already in operation as dirt pit. The current proposal is for permission to expand the operation for excavation of more area and to deepen the existing pits to 12 feet. Approximately 100,402.52 cubic yards of native sand material would be excavated and hauled offsite to other construction areas and used as fill. The proposed project is situated on an

approximately 38-acre tract that has been determined to include forested wetlands, other waters of the US, and herbaceous wetlands. Of this, approximately 0.45 acre of forested wetlands and 0.26 acre of herbaceous wetlands would be permanently impacted and 5.21 acres of other waters of the US will be temporarily impacted. It is anticipated that the proposed action would have minimal impact on adjacent wetlands.

The applicant has designed the project to avoid and minimize direct and secondary adverse impacts to the maximum extent practicable. Any further reduction would limit usage of the property and function, therefore deeming the project impracticable. As compensation for unavoidable wetland impacts, the applicant proposes to mitigate in-kind wetland credits from a Corps approved mitigation bank located in the watershed.

The applicant may be required to fully or partially restore the site to pre-project conditions if issuance of a permit is determined to be contrary to the public interest.

The comment period for the Department of Army will close in **30 days** from the date of this public notice. Written comments, including suggestions for modifications or objections to the proposed work, stating reasons thereof, are being solicited from anyone having interest in this permit and must be mailed so as to be received before or by the last day of the comment period. Letters concerning the Corps of Engineers permit application must reference the applicant's name and the Permit Application Number, and be mailed to the Corps of Engineers at the address above, **ATTENTION: REGULATORY BRANCH**. Similar letters concerning the Water Quality Certification must reference the applicant's name and the WQC Application number and be mailed to the Louisiana Department of Environmental Quality at the address above.

The application for this proposed project is on file with the Louisiana Department of Environmental Quality and may be examined during weekdays between 8:00 a.m. and 4:30 p.m. Copies may be obtained upon payment of costs of reproduction.

Corps of Engineers Permit Criteria

The decision whether to issue a permit will be based on an evaluation of the probable impacts, including cumulative impacts of the proposed activity on the public interest. That decision will reflect the national concern for both protection and utilization of important resources. The benefit which reasonably may be expected to accrue from the proposal must be balanced against its reasonably foreseeable detriments. All factors which may be relevant to the proposal will be considered including the cumulative effects thereof; among those are conservation, economics, aesthetics, general environmental concerns, wetlands, historic properties, fish and wildlife values, flood hazards, floodplain values, land use, navigation, shoreline erosion and accretion, recreation, water supply and conservation, water quality, energy needs, safety, food and fiber production, mineral needs, considerations of property ownership and, in general, the needs and welfare of the people.

The US Army Corps of Engineers is soliciting comments from the public, federal, state, and local agencies and officials, Indian Tribes, and other interested parties in order to consider and evaluate the impacts of this proposed activity. Any comments received will be considered by the US Army Corps of Engineers to determine whether to make, modify, condition, or deny a permit for this proposal. To make this decision, comments are used to

assess impacts on endangered species, historic properties, water quality, general environmental effects, and other public interest factors listed above. Comments are used in the preparation of an Environmental Assessment and/or an Environmental Impact Statement pursuant to the National Environmental Policy Act. Comments are also used to determine the need for a public hearing and to determine the overall public interest of the proposed activity.

The New Orleans District is unaware of properties listed on the National Register of Historic Places near the proposed work. The possibility exists that the proposed work may damage or destroy presently unknown archeological, scientific, prehistorical, historical sites, or data. Issuance of this public notice solicits input from the State Archeologist and State Historic Preservation Office regarding potential impacts to cultural resources.

The proposed activity is located in waters known to be utilized by the pallid sturgeon (*Scaphirhynchus albus*). Approximately 9 acres of potential foraging habitat will be directly impacted by the proposed activity. Because the impact is minimal and only effects the foraging habitat during high water events, the Corps has determined that this activity is not likely to adversely affect the pallid sturgeon.

Our initial finding is that the proposed work would neither affect any species listed as endangered by the U.S. Departments of Interior or Commerce, nor affect any habitat designated as critical to the survival and recovery of any endangered species.

This notice initiates the Essential Fish Habitat (EFH) consultation requirements of the Magnuson-Stevens Fishery Conservation and Management Act. The applicant's proposal would result in the destruction or alteration of up to **n/a** acres of EFH utilized by various life stages of red drum and penaeid shrimp. Our initial determination is that the proposed action would not have a substantial adverse impact on EFH or federally managed fisheries in the Gulf of Mexico. Our final determination relative to project impacts and the need for mitigation measures is subject to review by and coordination with the National Marine Fisheries Service.

If the proposed work involves deposits of dredged or fill material into navigable waters, the evaluation of the probable impacts will include the application of guidelines established by the Administrator of the Environmental Protection Agency. Also, a certification that the proposed activity will not violate water quality standards will be required from the Department of Environmental Quality, Office of Environmental Services before a permit is issued.

Any person may request, in writing, within the comment period specified in this notice, that a public hearing be held to consider this application. Requests for public hearings shall state, with particularity, the reasons for holding a public hearing. You are requested to communicate the information contained in this notice to any other parties whom you deem likely to have interest in the matter.

JOHN M. HERMAN
Chief, Central Evaluation Section
Regulatory Branch

Enclosures

Imagery Source: NAIPCopyr

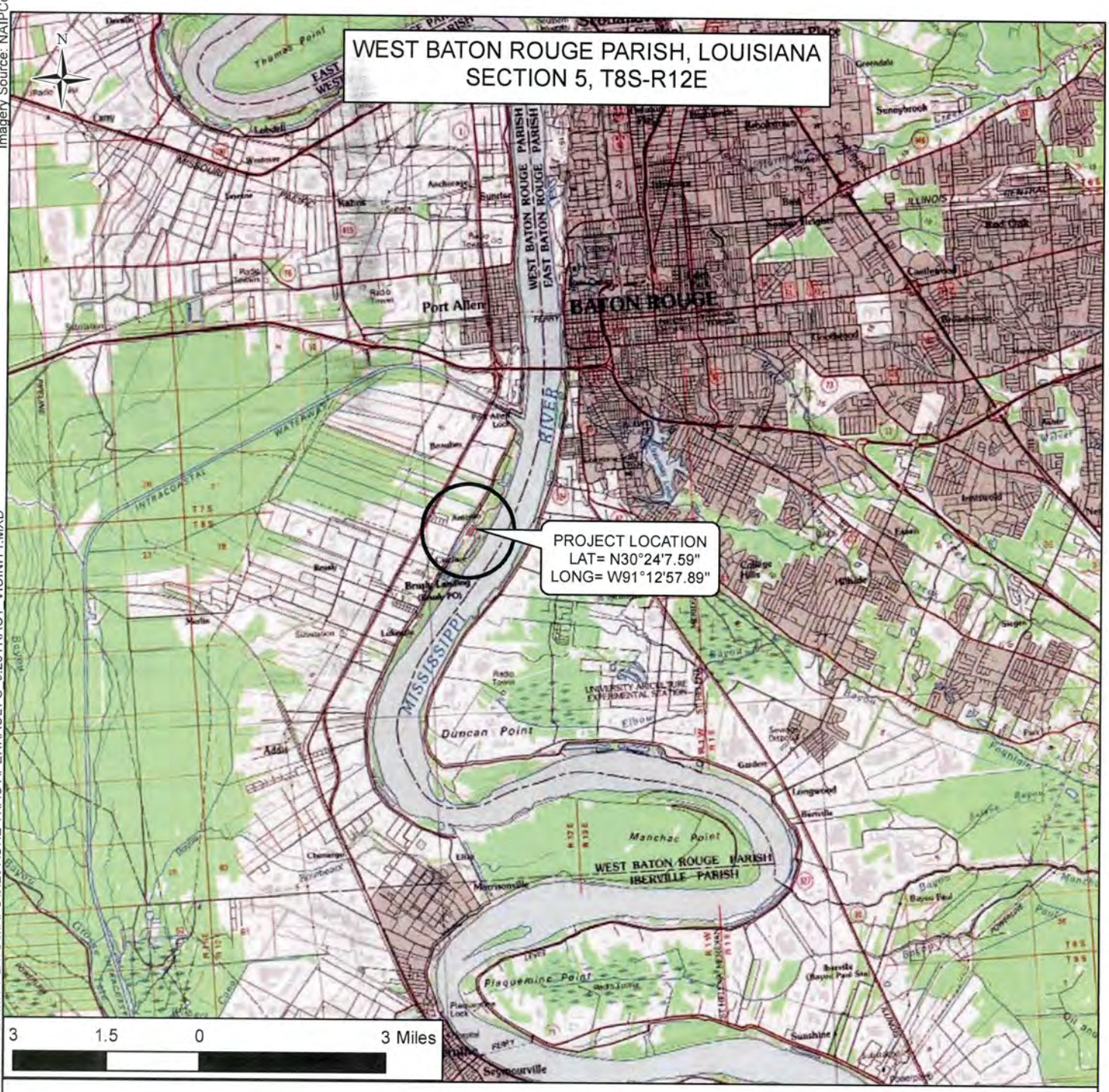

NOTE: NO FIELD SURVEY WAS MADE FOR THIS PROJECT AND NO ON-THE-GROUND EFFORT HAS BEEN MADE TO LOCATE AND INDICATE ALL CABLES, PIPELINES, ETC. CROSSED BY THE PROPOSED PROJECT. THEREFORE, MORRIS P. HEBERT, INC. IS NOT RESPONSIBLE FOR ANY LOCATED DURING THE COURSE OF THE PROJECT.

NOTE: THIS DRAWING WAS PREPARED FOR PERMITTING PURPOSES ONLY, AND IS NOT A PROPERTY BOUNDARY SURVEY AND AS SUCH DOES NOT COMPLY WITH THE STANDARDS SET FORTH FOR PROPERTY BOUNDARY SURVEYS BY THE PROFESSIONAL LAND SURVEY LISCENSING INSTITUTE FOR THE STATE(S) ILLUSTRATED.

PERRAULT'S TRUCKING

9.22 ACRE TRACT
AFTER THE FACT DIRT PIT AND PROPOSED NEW EXPANSION
VICINITY MAP

mph
Morris P. Hebert, Inc.
client focused solutions
SURVEYING • ENGINEERING • ENVIRONMENTAL SERVICES • FIELD SERVICES • GIS
283 CORPORATE DRIVE • P.O. BOX 3106 • HOUMA, LOUISIANA 70361 • (985) 879-2731
10101 SOUTHWEST FREEWAY • SUITE 620 • HOUSTON, TEXAS 77071 • (713) 219-1470

DRAWN BY: JLC	SHEET: 1
CHECKED BY: CRF/JC	SCALE: 1 IN = 3 Miles
APPROVED BY:	DATE: 1/29/2015
REVISION BY:	JOB NO.: 1172100
GIS FILE: PERRAULT'S_9.22TRACT_VICINITY.MXD	

FILE LOCATION: E:\L DRIVE\1172100-BRUSLY WETLAND DELINEATION\PERMIT PLATS\MAPS\9.28 ACRE TRACT\PERRAULT'S_9.28TRACT_VICINITY.MXD

Imagery Source: NAIPSourc

FILE LOCATION: E:\L DRIVE\1172100-BRUSLY WETLAND DELINEATION\PERMIT PLATS\MAPS\9.28 ACRE TRACT\PERRAULT'S_9.28TRACT_DETAIL.MXD

NOTE: NO FIELD SURVEY WAS MADE FOR THIS PROJECT AND NO ON-THE-GROUND EFFORT HAS BEEN MADE TO LOCATE AND INDICATE ALL CABLES, PIPELINES, ETC. CROSSED BY THE PROPOSED PROJECT. THEREFORE, MORRIS P. HEBERT, INC. IS NOT RESPONSIBLE FOR ANY LOCATED DURING THE COURSE OF THE PROJECT.

NOTE: THIS DRAWING WAS PREPARED FOR PERMITTING PURPOSES ONLY, AND IS NOT A PROPERTY BOUNDARY SURVEY AND AS SUCH DOES NOT COMPLY WITH THE STANDARDS SET FORTH FOR PROPERTY BOUNDARY SURVEYS BY THE PROFESSIONAL LAND SURVEY LISCENSING INSTITUTE FOR THE STATE(S) ILLUSTRATED.

PERRAULT'S TRUCKING

9.22 ACRE TRACT
AFTER THE FACT DIRT PIT AND PROPOSED NEW EXPANSION
ACCESS ROUTE & DIG LOCATION DETAIL

mph
Morris P. Hebert, Inc.
client focused solutions
SURVEYING • ENGINEERING • ENVIRONMENTAL SERVICES • FIELD SERVICES • GIS
283 CORPORATE DRIVE • P.O. BOX 3106 • HOUMA, LOUISIANA 70361 • (985) 879-2731
10101 SOUTHWEST FREEWAY • SUITE 620 • HOUSTON, TEXAS 77071 • (713) 219-1470

DRAWN BY: JLC	SHEET: 2
CHECKED BY: CRF/JC	SCALE: 1 IN = 400 ft
APPROVED BY:	DATE: 1/29/2015
REVISION BY:	JOB NO.: 1172100
GIS FILE: PERRAULT'S_9.22TRACT_DETAIL.MXD	

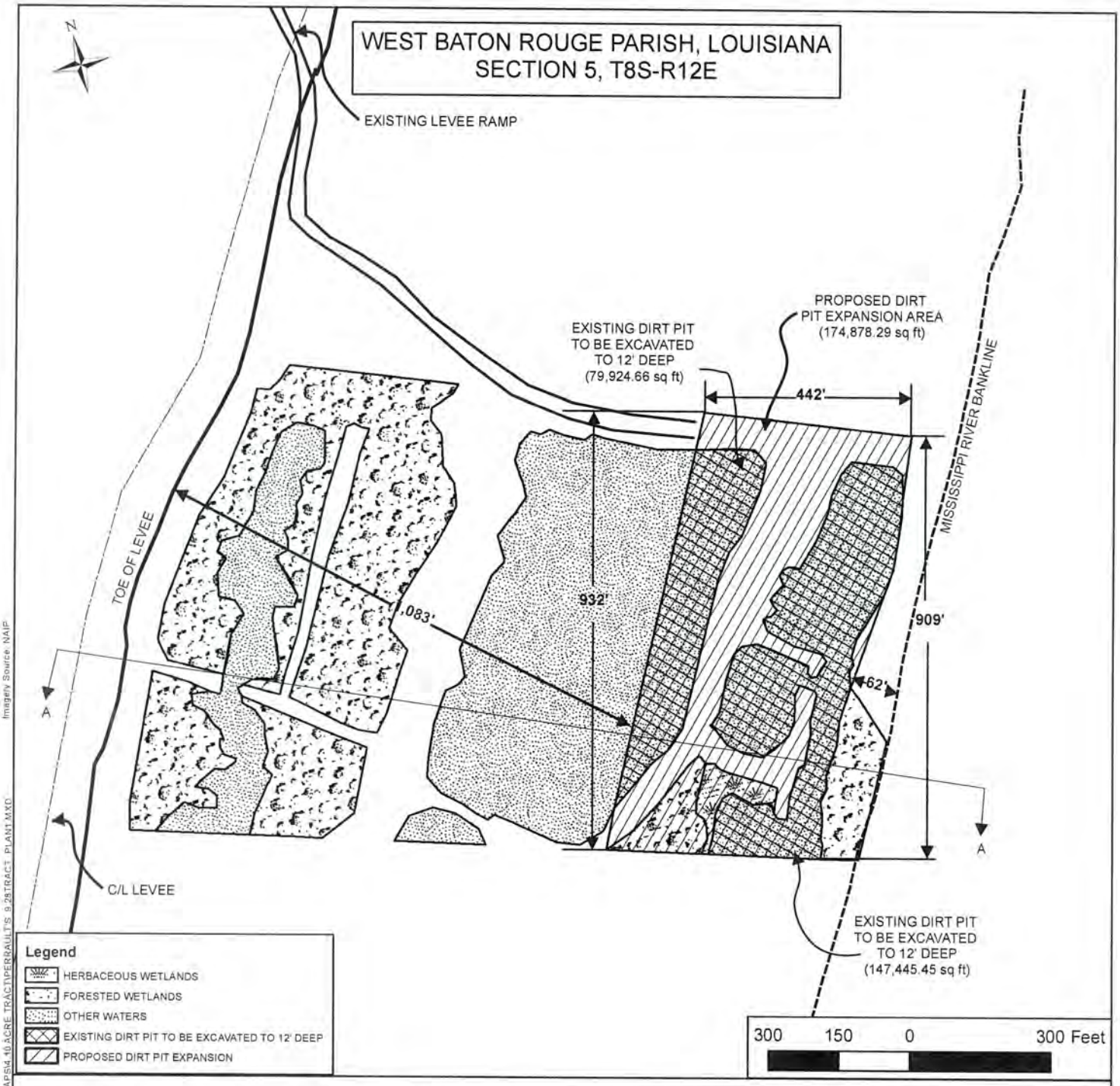

NOTE: NO FIELD SURVEY WAS MADE FOR THIS PROJECT AND NO ON-THE-GROUND EFFORT HAS BEEN MADE TO LOCATE AND INDICATE ALL CABLES, PIPELINES, ETC. CROSSED BY THE PROPOSED PROJECT. THEREFORE, MORRIS P. HEBERT, INC. IS NOT RESPONSIBLE FOR ANY LOCATED DURING THE COURSE OF THE PROJECT.

NOTE: THIS DRAWING WAS PREPARED FOR PERMITTING PURPOSES ONLY, AND IS NOT A PROPERTY BOUNDARY SURVEY AND AS SUCH DOES NOT COMPLY WITH THE STANDARDS SET FORTH FOR PROPERTY BOUNDARY SURVEYS BY THE PROFESSIONAL LAND SURVEY LISCENSING INSTITUTE FOR THE STATE(S) ILLUSTRATED.

PERRAULT'S TRUCKING

9.22 ACRE TRACT
AFTER THE FACT DIRT PIT AND PROPOSED NEW EXPANSION
PLAN VIEW

mph
Morris P. Hebert, Inc.
Client focused solutions
SURVEYING · ENGINEERING · ENVIRONMENTAL SERVICES · FIELD SERVICES · GIS
283 CORPORATE DRIVE · P.O. BOX 3106 · HOUMA, LOUISIANA 70361 · (985) 879-2731
10101 SOUTHWEST FREEWAY · SUITE 620 · HOUSTON, TEXAS 77071 · (713) 219-1470

DRAWN BY: JLC	SHEET: 3
CHECKED BY:	SCALE: 1 IN = 300 ft
APPROVED BY:	DATE: 1/28/2015
REVISION BY:	JOB NO.: 1172100
GIS FILE: PERRAULT'S_9.22TRACT_PLAN1.MXD	

FILE LOCATION: E:\LDRIVE\1172100-BRUSLY WETLAND DELINEATION\PERMIT PLATS\MAPS\4.10 ACRE TRACT\PERRAULT'S 9.28TRACT_PLAN1.MXD
Imagery Source: NAIP

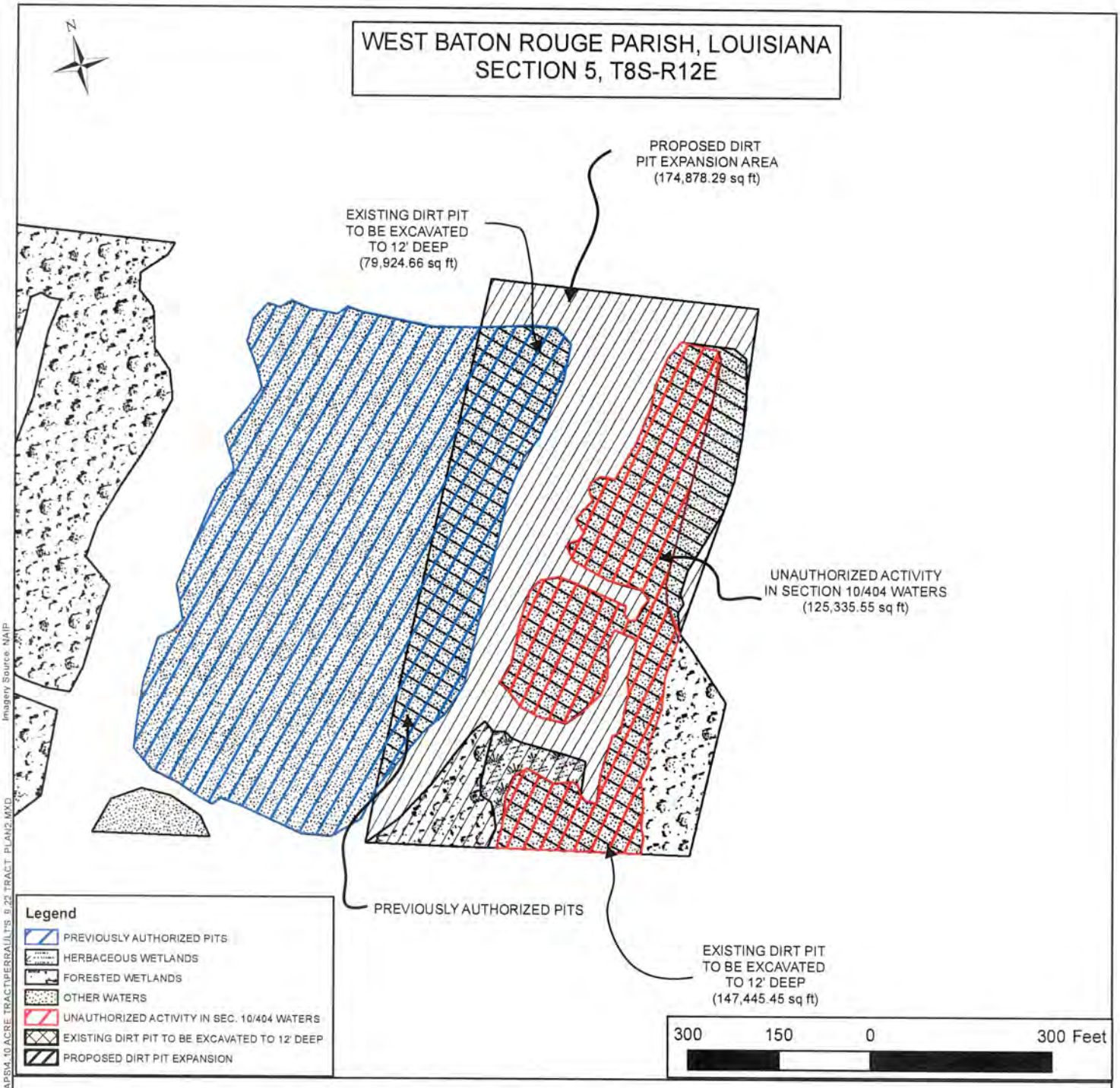

NOTE: NO FIELD SURVEY WAS MADE FOR THIS PROJECT AND NO ON-THE-GROUND EFFORT HAS BEEN MADE TO LOCATE AND INDICATE ALL CABLES, PIPELINES, ETC. CROSSED BY THE PROPOSED PROJECT. THEREFORE, MORRIS P. HEBERT, INC. IS NOT RESPONSIBLE FOR ANY LOCATED DURING THE COURSE OF THE PROJECT.

NOTE: THIS DRAWING WAS PREPARED FOR PERMITTING PURPOSES ONLY, AND IS NOT A PROPERTY BOUNDARY SURVEY AND AS SUCH DOES NOT COMPLY WITH THE STANDARDS SET FORTH FOR PROPERTY BOUNDARY SURVEYS BY THE PROFESSIONAL LAND SURVEY LISCENSING INSTITUTE FOR THE STATE(S) ILLUSTRATED.

PERRAULT'S TRUCKING

9.22 ACRE TRACT
AFTER THE FACT DIRT PIT AND PROPOSED NEW EXPANSION
PLAN VIEW

mph
Morris P. Hebert, Inc.
client focused solutions
SURVEYING • ENGINEERING • ENVIRONMENTAL SERVICES • FIELD SERVICES • GIS
283 CORPORATE DRIVE · P.O. BOX 3106 · HOUMA, LOUISIANA 70361 · (985) 879-2731
10101 SOUTHWEST FREEWAY · SUITE 620 · HOUSTON, TEXAS 77071 · (713) 219-1470

DRAWN BY: JLC	SHEET: 4
CHECKED BY:	SCALE: 1 IN = 300 ft
APPROVED BY:	DATE: 1/29/2015
REVISION BY:	JOB NO.: 1172100
GIS FILE: PERRAULT'S_9.22 TRACT_PLAN2.MXD	

Imagery Source: NAIP

FILE LOCATION: E:\LDRIVE\1172100-BRUSLY WETLAND DELINEATION\PERMIT PLATS\MAPS\4.10 ACRE TRACT\PERRAULTS 9.22 TRACT PLAN2.MXD

PROPOSED DREDGE AREA

TYPICAL CROSS-SECTION "A-A"

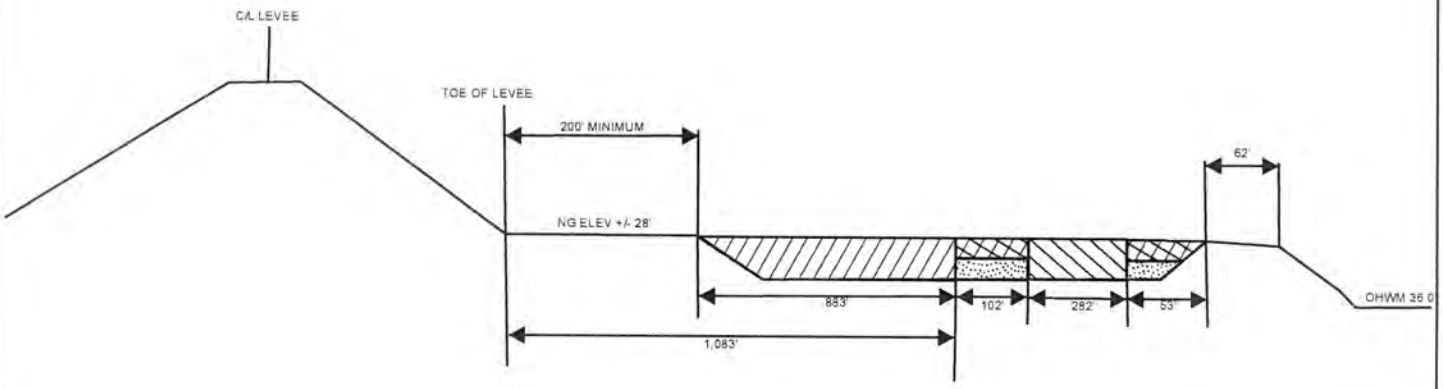

PROPOSED EXCAVATIONS		
CLASSIFICATION	**Acreage**	**Cubic Yards**
FORESTED WETLANDS	0.45	8829.35
HERBACEOUS WETLANDS	0.26	4985.84
OPEN WATER	2.34	22699.33
UPLAND	3.30	63888.00
TOTAL	**6.35**	**100402.52**

UNAUTHORIZED ACTIVITY		
CLASSIFICATION	**Acreage**	**Cubic Yards**
OPEN WATER	2.87	27781.55
TOTAL	**2.87**	**27781.55**

Legend

- EXISTING DIRT PIT TO BE EXCAVATED TO 12' DEEP
- PREVIOUSLY DREDGED AREA
- AVAILABLE FOR BORROW
- PROPOSED DIRT PIT EXPANSION

NOTE:
1. EXCAVATED MATERIAL TO BE SOLD AND HAULED OFF SITE.
2. PLEASE SEE ATTACHED BRADFORD ENGINEERING AND SERVICES, LLC RIVER SIDE BORROW PITS PLATS FOR NATURAL GROUND ELEVATION CONTOURS.

NOTE: NO FIELD SURVEY WAS MADE FOR THIS PROJECT AND NO ON-THE-GROUND EFFORT HAS BEEN MADE TO LOCATE AND INDICATE ALL CABLES, PIPELINES, ETC. CROSSED BY THE PROPOSED PROJECT. THEREFORE, MORRIS P. HEBERT, INC. IS NOT RESPONSIBLE FOR ANY LOCATED DURING THE COURSE OF THE PROJECT.

NOTE: THIS DRAWING WAS PREPARED FOR PERMITTING PURPOSES ONLY, AND IS NOT A PROPERTY BOUNDARY SURVEY AND AS SUCH DOES NOT COMPLY WITH THE STANDARDS SET FORTH FOR PROPERTY BOUNDARY SURVEYS BY THE PROFESSIONAL LAND SURVEY LISCENSING INSTITUTE FOR THE STATE(S) ILLUSTRATED.

PERRAULT'S TRUCKING

9.22 ACRE TRACT
AFTER THE FACT DIRT PIT AND PROPOSED NEW EXPANSION
TYPICAL DREDGE PROFILE VIEW AND NOTES

mph Morris P. Hebert, Inc.
client focused solutions
SURVEYING • ENGINEERING • ENVIRONMENTAL SERVICES • FIELD SERVICES • GIS
283 CORPORATE DRIVE • P.O. BOX 3106 • HOUMA, LOUISIANA 70361 • (985) 879-2731
10101 SOUTHWEST FREEWAY • SUITE 620 • HOUSTON, TEXAS 77071 • (713) 219-1470

DRAWN BY: JLC	SHEET: 5
CHECKED BY: CRF/JC	SCALE:
APPROVED BY:	DATE: 1/29/2015
REVISION BY:	JOB NO.: 1172100
GIS FILE: PERRAULT'S_9.22TRACT_NOTES1.MXD	

Imagery Source: NAIP
FILE LOCATION: E:\L DRIVE\1172100-BRUSLY WETLAND DELINEATION\PERMIT PLATS\MAPS\4.10 ACRE TRACT\PERRAULT'S_9.22TRACT_NOTES1.MXD