JOINT PUBLIC NOTICE

May 19, 2014

United States Army
Corps of Engineers
New Orleans District
Regulatory Branch
Post Office Box 60267
New Orleans, Louisiana 70160-0267

(504) 862-2259
Project Manager
Scott N. Kennedy
scott.n.kennedy@usace.army.mil
Permit Application Number
MVN 2013-3062 EMM

State of Louisiana
Department of Environmental Quality
Attn: Water Quality Certifications
Post Office Box 4313
Baton Rouge, Louisiana 70821-4313

(225) 219-3225
Project Manager
Elizabeth Johnson
WQC Application Number
WQC 140514-02

Interested parties are hereby notified that a permit application has been received by the New Orleans District of the U.S. Army Corps of Engineers pursuant to: [ ] Section 10 of the Rivers and Harbors Act of March 3, 1899 (30 Stat. 1151; 33 USC 403); and/or [X] Section 404 of the Clean Water Act (86 Stat. 816; 33 USC 1344).

Application has also been made to the Louisiana Department of Environmental Quality, Water Quality Certifications, for a Water Quality Certification (WQC) in accordance with statutory authority contained in LRS 30:2074 A(3) and provisions of Section 401 of the Clean Water Act.

CLEAR, GRADE, AND FILL FOR A DRIVEWAY, TWO RECREATIONAL VEHICLE PADS, AND TWO SEPTIC SYSTEMS IN GRAND ISLE IN JEFFERSON PARISH

NAME OF APPLICANT: Brandon Johnson, 15135 Cocodrie Avenue, Baton Rouge, Louisiana 70817

LOCATION OF WORK: At 144 and 148 Pete's Wharf Lane, in Grand Isle, Louisiana, in Jefferson Parish, as shown on the attached drawings.

HUC: 08090301 East - Central Louisiana Coastal : Barataria Basin
Latitude: 29.214014 Longitude: -90.028511

CHARACTER OF WORK: Clear, grade, and fill for a driveway, two recreational vehicle pads, and two septic systems in the Grand Isle. Approximately 58 cubic yards of sand and concrete will be used as fill in wetlands. Approximately 0.07 acres of wetlands would be filled. The applicant's mitigation requirement would be met by use of an appropriate mitigation bank.

The comment period for the Department of the Army Permit and the Louisiana Department of Environmental Quality WQC will close **20 days** from the date of this joint public notice. Written comments, including suggestions for modifications or objections to the proposed work, stating reasons thereof, are being solicited from anyone having interest in this permit and/or this WQC request and must be mailed so as to be received before or by the last day of the comment period. Letters concerning the Corps of Engineers permit application must reference the applicant's nameand the Permit Application Number, and be mailed to the Corps of Engineers at the address above, **ATTENTION: REGULATORY BRANCH**. Similar letters concerning the Water Quality Certification must reference the applicant's name and the WQC Application number and be mailed to the Louisiana Department of Environmental Quality at the address above. Individuals or parties may request an extension of time in

which to comment on the proposed work by writing or e-mailing the Corps of Engineers Project Manager listed above. Any request must be specific and substantively supportive of the requested extension, and received by this office prior to the end of the initial comment period. The Section Chief will review the request and the requestor will be promptly notified of the decision to grant or deny the request. If granted, the time extension will be continuous to the initial comment period and, inclusive of the initial comment period, will not exceed a total of 30 calendar days.

The application for this proposed project is on file with the Louisiana Department of Environmental Quality and may be examined weekdays between 8:00 a.m. and 4:30 p.m. Copies may be obtained upon payment of costs of reproduction.

Corps of Engineers Permit Criteria

The decision whether to issue a permit will be based on an evaluation of the probable impacts, including cumulative impacts of the proposed activity on the public interest. That decision will reflect the national concern for both protection and utilization of important resources. The benefit which reasonably may be expected to accrue from the proposal must be balanced against its reasonably foreseeable detriments. All factors which may be relevant to the proposal will be considered including the cumulative effects thereof; among those are conservation, economics, aesthetics, general environmental concerns, wetlands, historic properties, fish and wildlife values, flood hazards, floodplain values, land use, navigation, shoreline erosion and accretion, recreation, water supply and conservation, water quality, energy needs, safety, food and fiber production, mineral needs, considerations of property ownership and, in general, the needs and welfare of the people.

The U.S. Army Corps of Engineers is soliciting comments from the public, federal, state, and local agencies and officials, Indian Tribes, and other interested parties in order to consider and evaluate the impacts of this proposed activity. Any comments received will be considered by the U.S. Army Corps of Engineers to determine whether to make, modify, condition, or deny a permit for this proposal. To make this decision, comments are used to assess impacts on endangered species, historic properties, water quality, general environmental effects, and other public interest factors listed above. Comments are used in the preparation of an Environmental Assessment and/or an Environmental Impact Statement pursuant to the National Environmental Policy Act. Comments are also used to determine the need for a public hearing and to determine the overall public interest of the proposed activity.

The New Orleans District is unaware of properties listed on the National Register of Historic Places near the proposed work. The possibility exists that the proposed work may damage or destroy presently unknown archeological, scientific, prehistorical, historical sites, or data. Issuance of the public notice solicits input from the State Archeologist and State Historic Preservation Office regarding potential impacts to cultural resources.

Our initial finding is that the proposed work would neither affect any species listed as endangered by the U.S. Departments of Interior or Commerce, nor affect any habitat designated as critical to the survival and recovery of any endangered species.

This notice initiates the Essential Fish Habitat (EFH) consultation requirements of the Magnuson-Stevens Fishery Conservation and Management Act. The applicant's proposal would result in the destruction or alteration of up to 0.07 acres of EFH utilized by various life stages of red drum and penaeid shrimp. Our initial determination is that the proposed action would not have a substantial adverse impact on EFH or federally managed fisheries in the Gulf of Mexico. Our final determination relative to project impacts and the need for mitigation measures is subject to review by and coordination with the National Marine Fisheries Service.

If the proposed work involves deposits of dredged or fill material into navigable waters, the evaluation of the probable impacts will include the application of guidelines established by the Administrator of the Environmental Protection Agency. Also, a certification that the proposed activity will not violate water quality standards will be required from the Department of Environmental Quality, Water Quality Certifications, before a permit is issued.

Any person may request, in writing, within the comment period specified in this notice, that a public hearing be held to consider this application. Requests for public hearings shall state, with particularity, the reasons for holding a public hearing.

The applicant has certified that the proposed activity described in the application complies with and will be conducted in a manner that is consistent with the Louisiana Coastal Resources Program. The Department of the Army permit will not be issued unless the applicant received approval or a waiver of the Coastal Use Permit by the Department of Natural Resources.

You are requested to communicate the information contained in this notice to any other parties whom you deem likely to have interest in the matter.

Michael Farabee
Chief, Eastern Evaluation Section

Enclosures

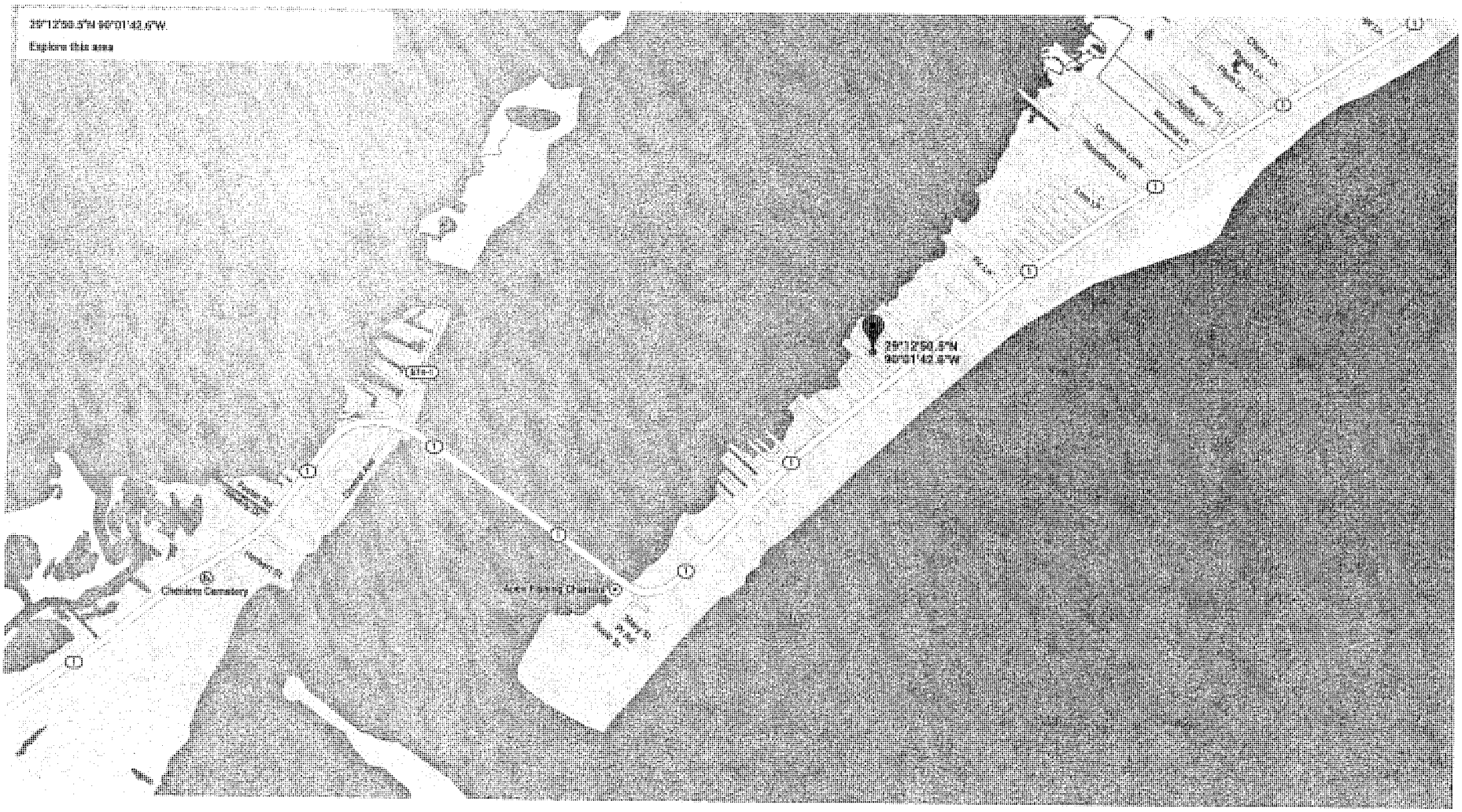
29°12'50.5"N 90°01'42.6"W
Explore this area
Cemetery Cemetery
Lake Fairing Cemetery
Map data ©2014 Google 1000 ft

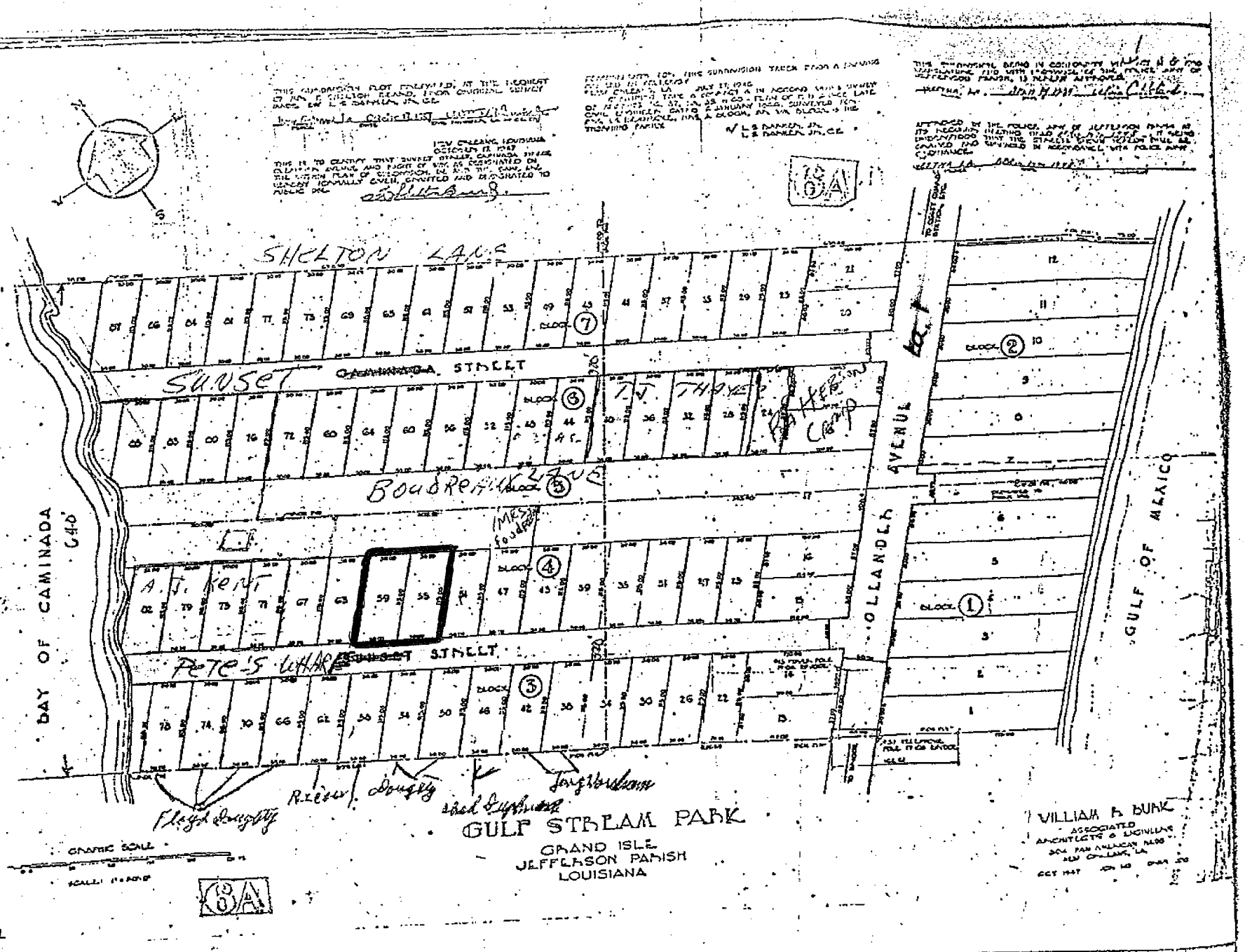
SHELTON LANE
SUNSET STREET
BOUDREAUX LANE
PETE'S WHARF
BAY OF CAMINADA
GULF OF MEXICO
OLLANDER AVENUE
GULF STREAM PARK
GRAND ISLE
JEFFERSON PARISH
LOUISIANA
WILLIAM A. BURK
ASSOCIATED ARCHITECTS & ENGINEERS
NEW ORLEANS, LA.
GRAPHIC SCALE

CONCRETE PADS FOR RV CAMP SITE (REV 2)

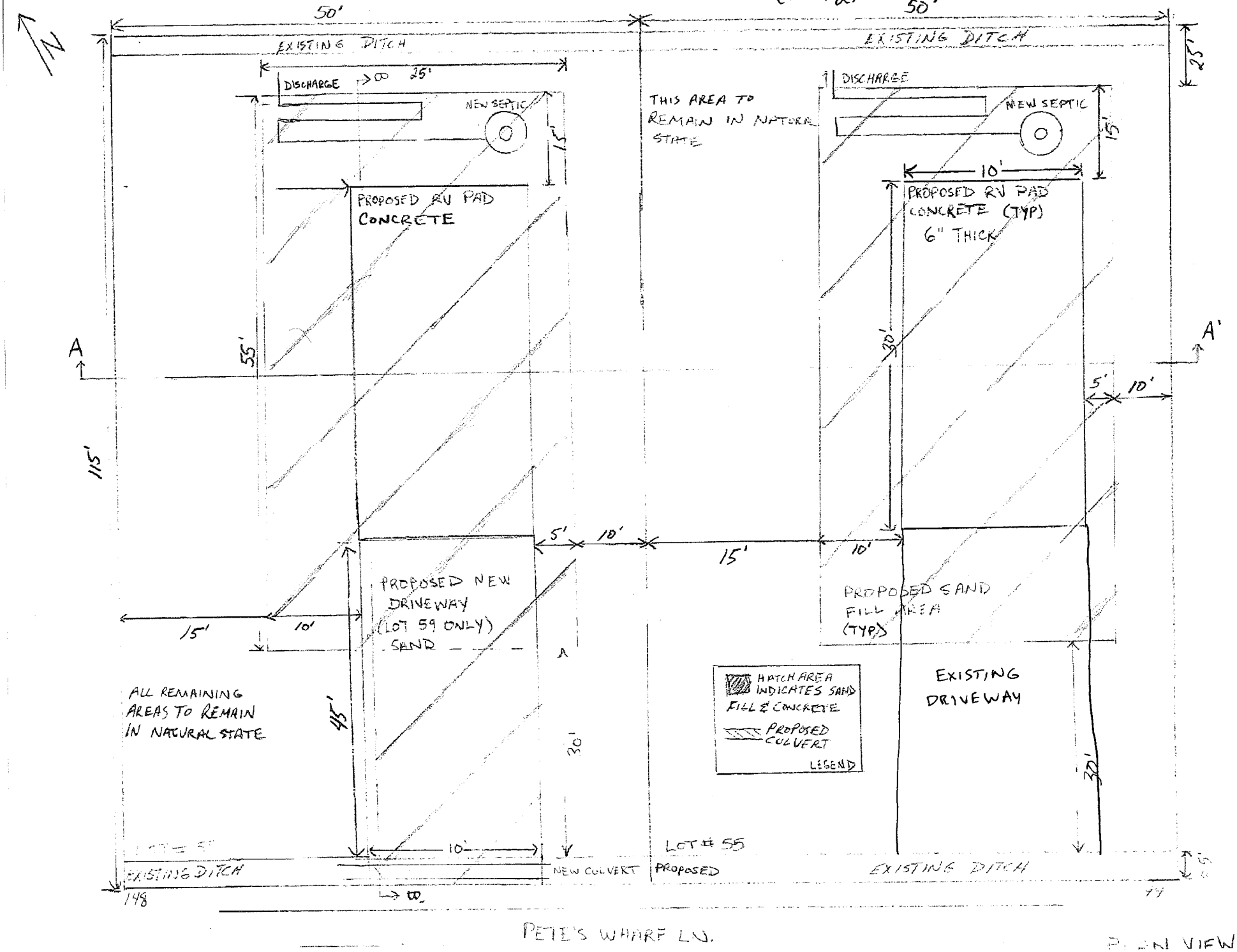

PLAN VIEW

REV 2 02/14/14

NOTE: NOT TO SCALE

CONCRETE PADS FOR RV CAMP SITE
CROSS SECTION VIEWS

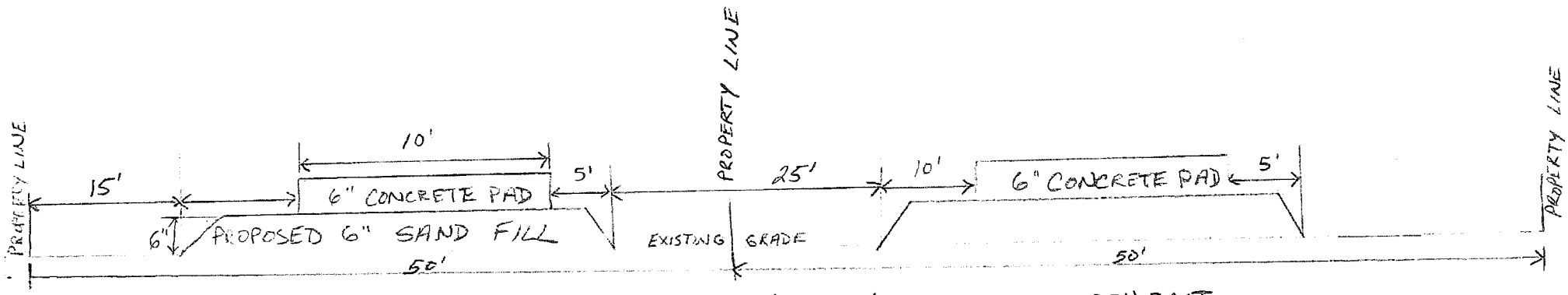

SECTION A-A' LOOKING NORTHEAST

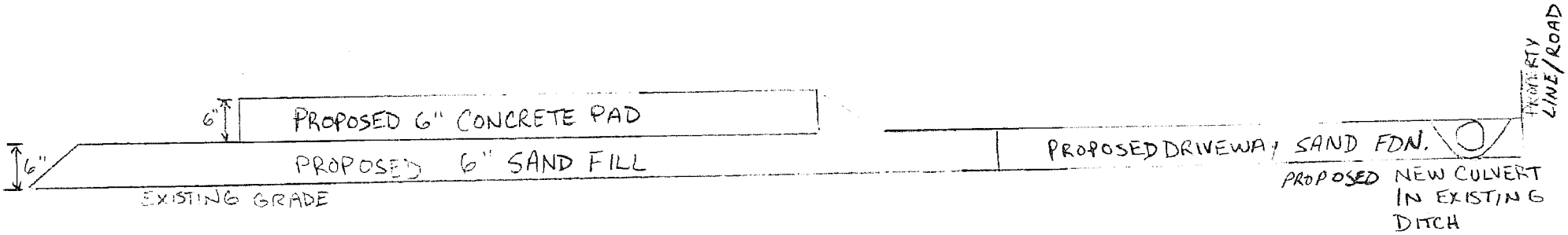

REV1 02/14/14 Brandon Johnson

SECTION B-B' LOOKING SOUTHEAST

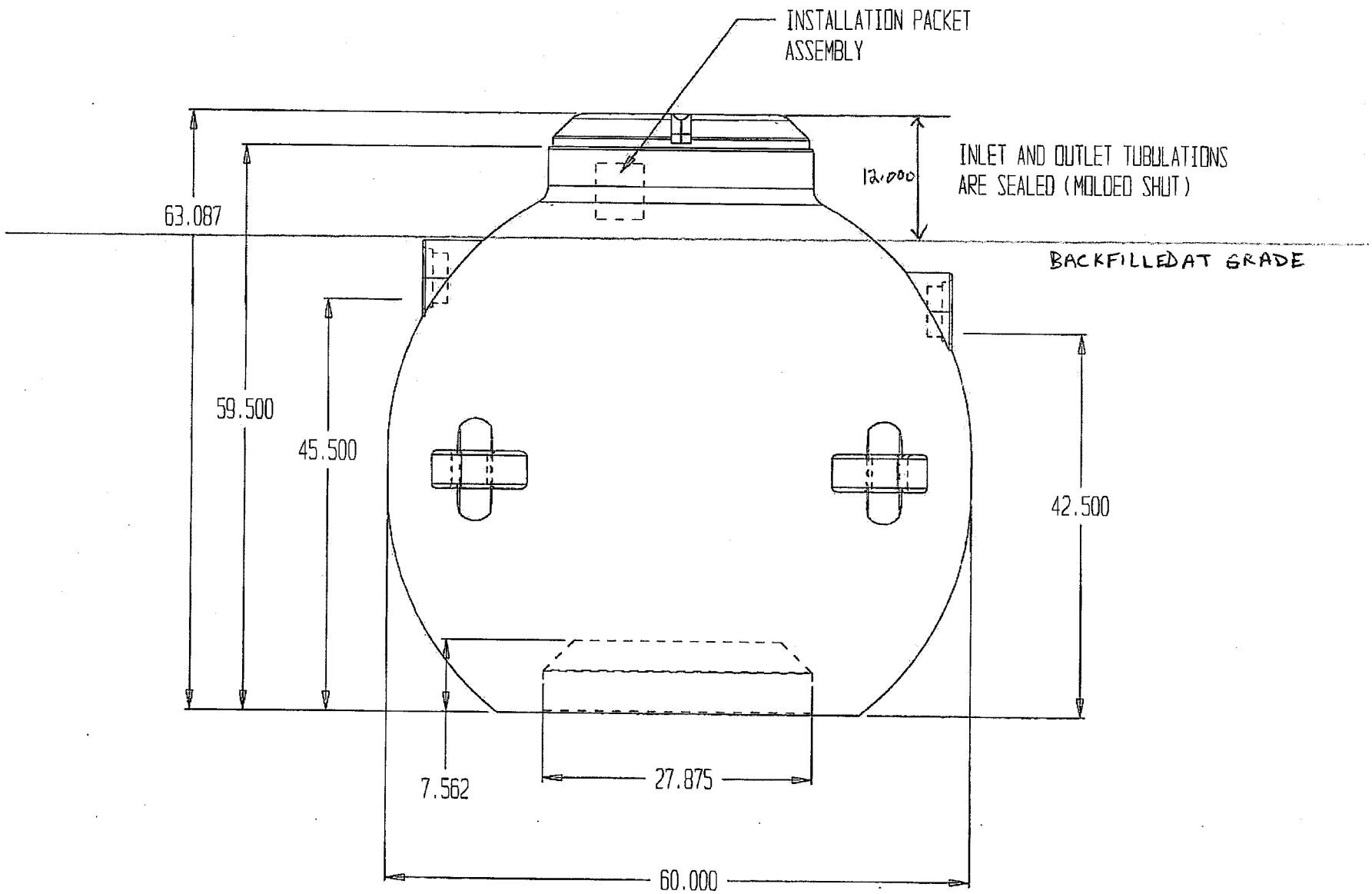

(all dimensions in inches)

PART #S
51755

Proposed 500 Gallon Pump Tank Installation x2

CONTINUITY INDUSTRIES INC.