JOINT PUBLIC NOTICE

December 2, 2013

United States Army
Corps of Engineers
New Orleans District
Regulatory Branch
Post Office Box 60267
New Orleans, Louisiana 70160-0267

(504) 862-2225
Stephanie.L.Castaing@usace.army.mil
Project Manager
Stephanie Castaing
Permit Application Number
MVN 2013-0668 EPP

State of Louisiana
Department of Environmental Quality
ATTN: Water Quality Certifications
Post Office Box 4313
Baton Rouge, Louisiana 70821-4313

(225) 219-3225

Project Manager
Jamie Phillippe
WQC Application Number
WQC 130325-01

Interested parties are hereby notified that a permit application has been received by the New Orleans District of the U.S. Army Corps of Engineers pursuant to: [X] Section 10 of the Rivers and Harbors Act of March 3, 1899 (30 Stat. 1151; 33 USC 403); and/or [X] Section 404 of the Clean Water Act (86 Stat. 816; 33 USC 1344).

Application has also been made to the Louisiana Department of Environmental Quality, Water Quality Certifications, for a Water Quality Certification (WQC) in accordance with statutory authority contained in LRS30:2047 A(3), and provisions of Section 401 of the Clean Water Act (P.L.95-17).

MODIFICATION TO INSTALL AND MAINTAIN ADDITIONAL MOORING TO FACILITATE A NEW BARGE FLEET WITHIN THE MISSISSIPPI RIVER IN PLAQUEMINES PARISH

NAME OF APPLICANT: CHS, Inc., c/o Waldemar S. Nelson & Company, Inc., 1200 St. Charles Ave, New Orleans, Louisiana 70130.

LOCATION OF WORK: Located on the left descending bank of the Mississippi River, 61.3- 62.6 miles above Head of Passes, off of LA 39, in Carlisle, Louisiana, in Plaquemines Parish, as shown on the attached drawings.

Latitude: 29.6794/Longitude: -89.9591; Hydrologic Unit Code: 08090203 – Eastern Louisiana Coastal.

CHARACTER OF WORK: Install and maintain mooring dolphins for additional barge fleeting. Project implementation will require the deposition of approximately 2,600 cubic yards/1.0 acre of rock. No impacts to wetlands are anticipated, therefore, no compensatory mitigation is proposed.

The comment period for the Department of the Army Permit and the Louisiana Department of Environmental Quality WQC will close **30 days** from the date of this joint public notice. Written comments, including suggestions for modifications or objections to the proposed work, stating reasons thereof, are being solicited from anyone having interest in this permit and/or this WQC request and must be mailed so as to be received before or by the last day of the comment period. Letters concerning the Corps of Engineers permit application must reference the applicant's name and the Permit Application Number, and be mailed to the Corps of Engineers at the address above, **ATTENTION: REGULATORY BRANCH**. **Similar letters concerning the Water Quality Certification must reference the applicant's name and the WQC Application number and be mailed to the Louisiana Department of Environmental Quality at the address above.**

The application for this proposed project is on file with the Louisiana Department of Environmental Quality and may be examined during weekdays between 8:00 a.m. and 4:30 p.m. Copies may be obtained upon payment of costs of reproduction.

Corps of Engineers Permit Criteria

The decision whether to issue a permit will be based on an evaluation of the probable impacts, including cumulative impacts of the proposed activity on the public interest. That decision will reflect the national concern for both protection and utilization of important resources. The benefit which reasonably may be expected to accrue from the proposal must be balanced against its reasonably foreseeable detriments. All factors which may be relevant to the proposal will be considered including the cumulative effects thereof; among those are conservation, economics, aesthetics, general environmental concerns, wetlands, historic properties, fish and wildlife values, flood hazards, floodplain values, land use, navigation, shoreline erosion and accretion, recreation, water supply and conservation, water quality, energy needs, safety, food and fiber production, mineral needs, considerations of property ownership and, in general, the needs and welfare of the people.

The U.S. Army Corps of Engineers is soliciting comments from the public, federal, state, and local agencies and officials, Indian Tribes, and other interested parties in order to consider and evaluate the impacts of this proposed activity. Any comments received will be considered by the U.S. Army Corps of Engineers to determine whether to make, modify, condition, or deny a permit for this proposal. To make this decision, comments are used to assess impacts on endangered species, historic properties, water quality, general environmental effects, and other public interest factors listed above. Comments are used in the preparation of an Environmental Assessment and/or an Environmental Impact Statement pursuant to the National Environmental Policy Act. Comments are also used to determine the need for a public hearing and to determine the overall public interest of the proposed activity.

The New Orleans District is unaware of properties listed on the National Register of Historic Places near the proposed work. The possibility exists that the proposed work may damage or destroy presently unknown archeological, scientific, prehistorical, historical sites, or data. Issuance of this public notice solicits input from the State Archeologist and State Historic Preservation Officer regarding potential impacts to cultural resources.

This notice initiates the Essential Fish Habitat (EFH) consultation requirements of the Magnuson-Stevens Fishery Conservation and Management Act. The applicant's proposal would result in the destruction or alteration of **1.0** acres of EFH utilized by various life stages of red drum and penaeid shrimp. Our initial determination is that the proposed action would not have a substantial adverse impact on EFH or federally managed fisheries in the Gulf of Mexico. Our final determination relative to project impacts and the need for mitigation measures is subject to review by and coordination with the National Marine Fisheries Service.

If the proposed work involves deposits of dredged or fill material into navigable waters, the evaluation of the probable impacts will include the application of guidelines established by the Administrator of the Environmental Protection Agency. Also, a certification that the proposed activity will not violate applicable water quality standards will be required from the Department of Environmental Quality, Water Quality Certifications, before a permit is issued.

Any person may request, in writing, within the comment period specified in this notice, that a public hearing be held to consider this application. Requests for public hearings shall state, with particularity, the reasons for holding a public hearing.

The applicant has certified that the proposed activity described in the application complies with and will be conducted in a manner that is consistent with the Louisiana Coastal Resources Program. The Department of the Army permit will not be issued unless the applicant receives approval or a waiver of the Coastal Use Permit by the Department of Natural Resources.

You are requested to communicate the information contained in this notice to any other parties whom you deem likely to have interest in the matter.

Michael V. Farabee
Chief, Eastern Evaluation Section

Enclosure

PLAQUEMINES PARISH, LA.
T 16 S R 12 E
SECTIONS 1 & 2

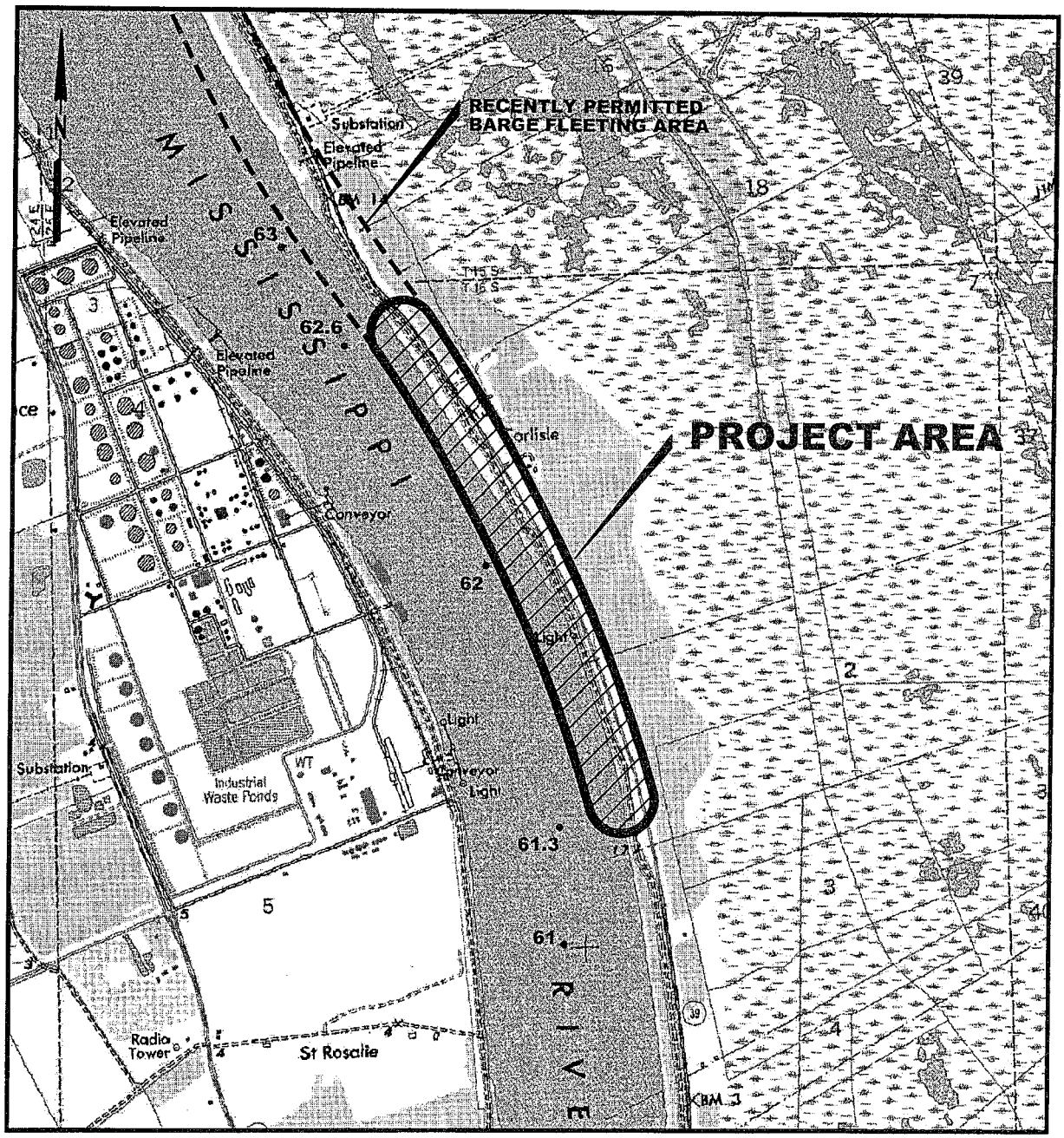

VICINITY MAP

2000 1000 0 2000 4000 6000 FT.

WALDEMAR S. NELSON AND COMPANY INCORPORATED ENGINEERS AND ARCHITECTS 1200 ST. CHARLES AVE. NEW ORLEANS, LA.	CHS, INC. BARGE MOORING FACILITY CARLISLE, LA.		
	DATE	SCALE	JOB NO.	DRAWING NO.
	6-24-13	SHOWN	20130128	P1

PLOT DATE: 6/30/13 4:20 P.M. ACAD FILE: 20130128P1.DWG

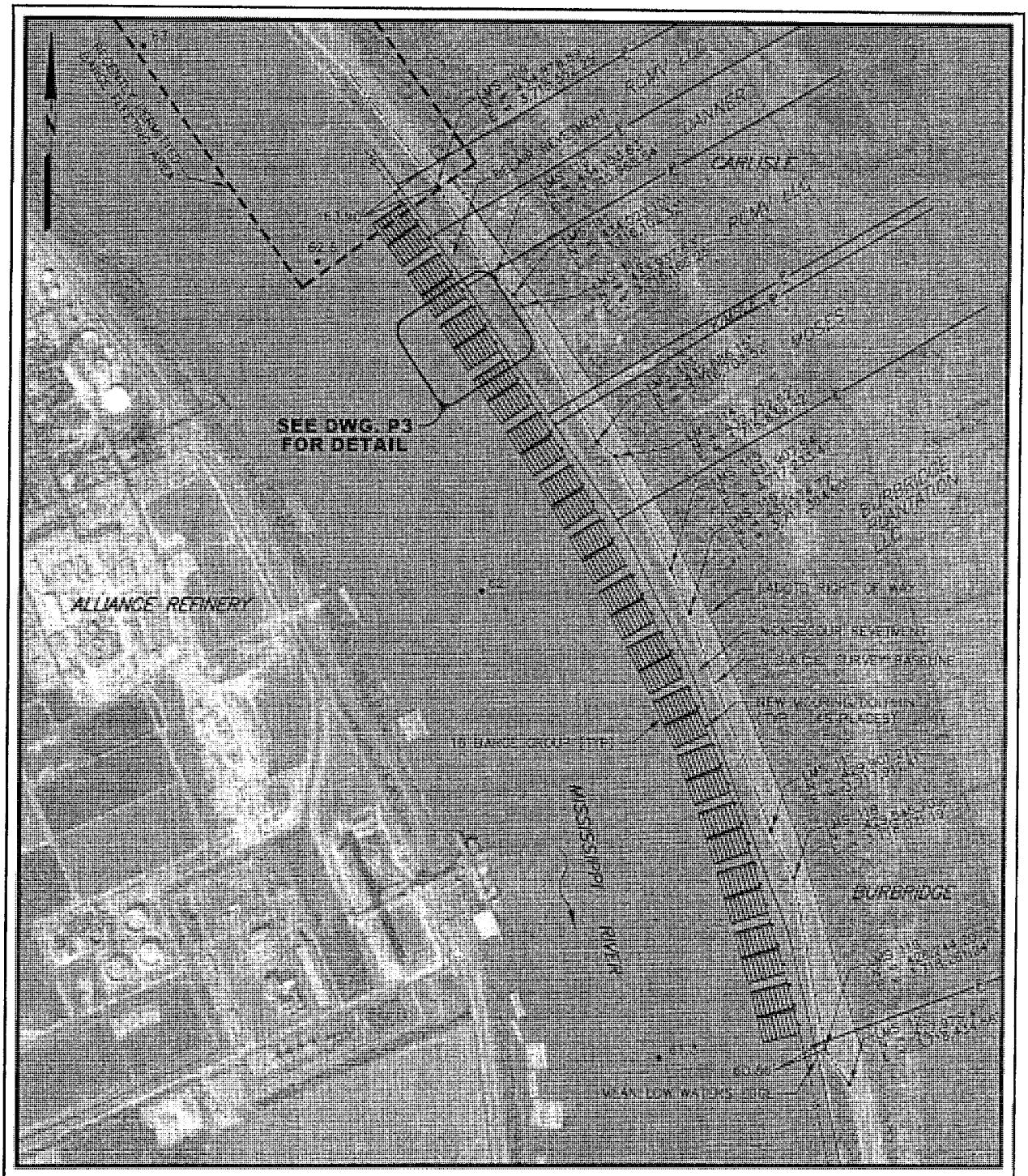

SITE PLAN

1000 500 0 1000 2000 6000 FT

WALDEMAR S. NELSON AND COMPANY INCORPORATED ENGINEERS AND ARCHITECTS 1200 ST. CHARLES AVE. · NEW ORLEANS, LA.	CHS, INC. BARGE MOORING FACILITY CARLISLE, LA.		
	DATE	SCALE	JOB NO.	DRAWING NO.
	7-15-13	SHOWN	20130128	P2

PLOT DATE: 7/15/13 4:20 P.M. ACAD FILE: 20130128P2.DWG

DETAILED SITE PLAN

100 50 0 100 200 600 FT

WALDEMAR S. NELSON AND COMPANY
INCORPORATED
ENGINEERS AND ARCHITECTS
1200 ST. CHARLES AVE. NEW ORLEANS, LA.

CHS, INC.
BARGE MOORING FACILITY
CARLISLE, LA.

DATE	SCALE	JOB NO.	DRAWING NO.
7-15-13	SHOWN	20130128	P3

PLOT DATE: 7/15/13 4:20 P.M. ACAD FILE: 20130128P3.DWG

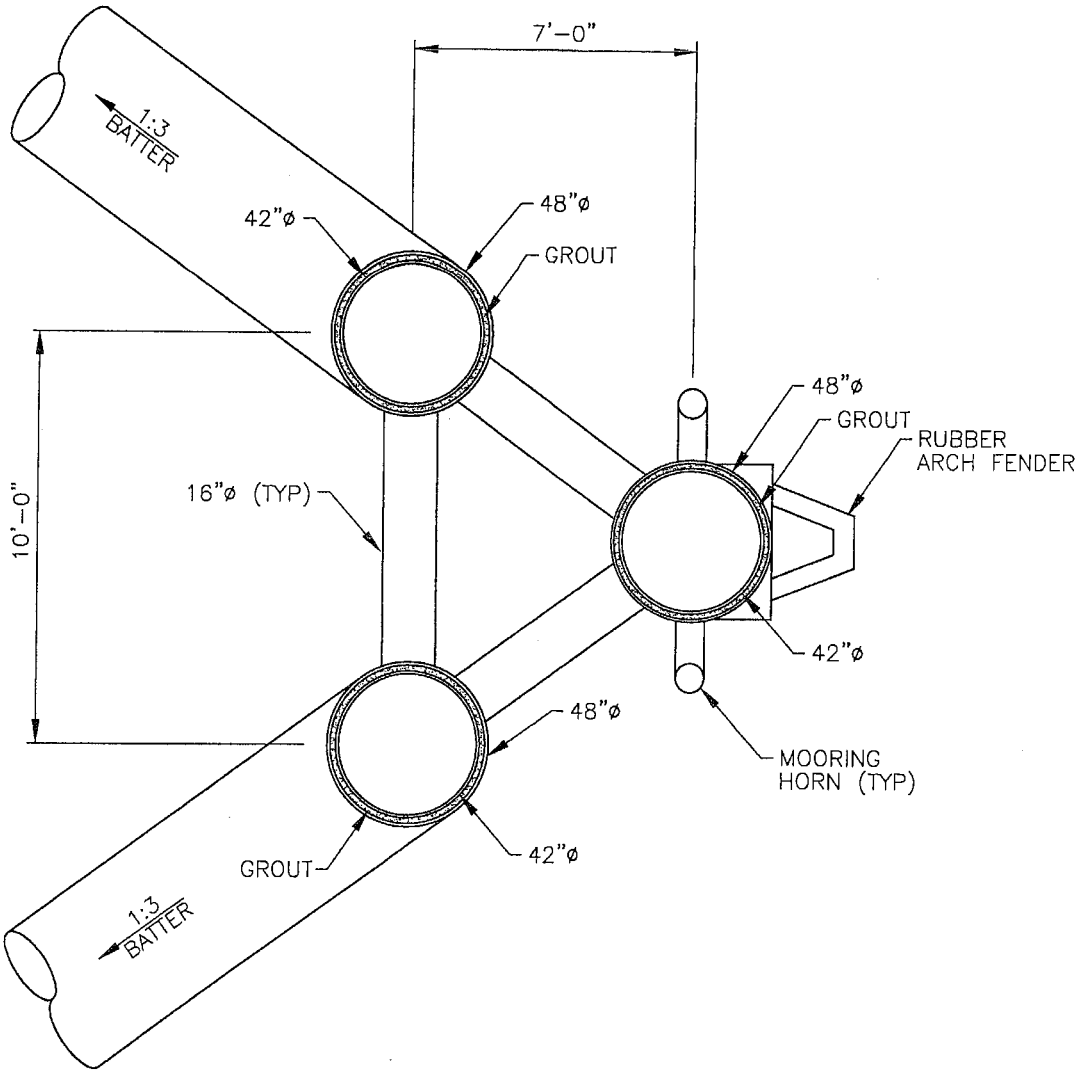

MOORING DOLPHIN

PLAN (OPTION 1)

SCALE 1/4"=1'-0"

NOTE:
TYPE OF DOLPHIN (OPTION 1 TRIPOD OR OPTION 2 MONOPILE) WILL BE CONFIRMED UPON RECEIPT OF GEOTECHNICAL REPORT.

WALDEMAR S. NELSON AND COMPANY
INCORPORATED
ENGINEERS AND ARCHITECTS
1200 ST. CHARLES AVE. NEW ORLEANS, LA.

CHS, INC.
BARGE MOORING FACILITY
CARLISLE, LA.

DATE	SCALE	JOB NO.	DRAWING NO.
7-15-13	SHOWN	20130128	P4

PLOT DATE: 7/15/13 4:20 P.M. ACAD FILE: 20130128P4.DWG

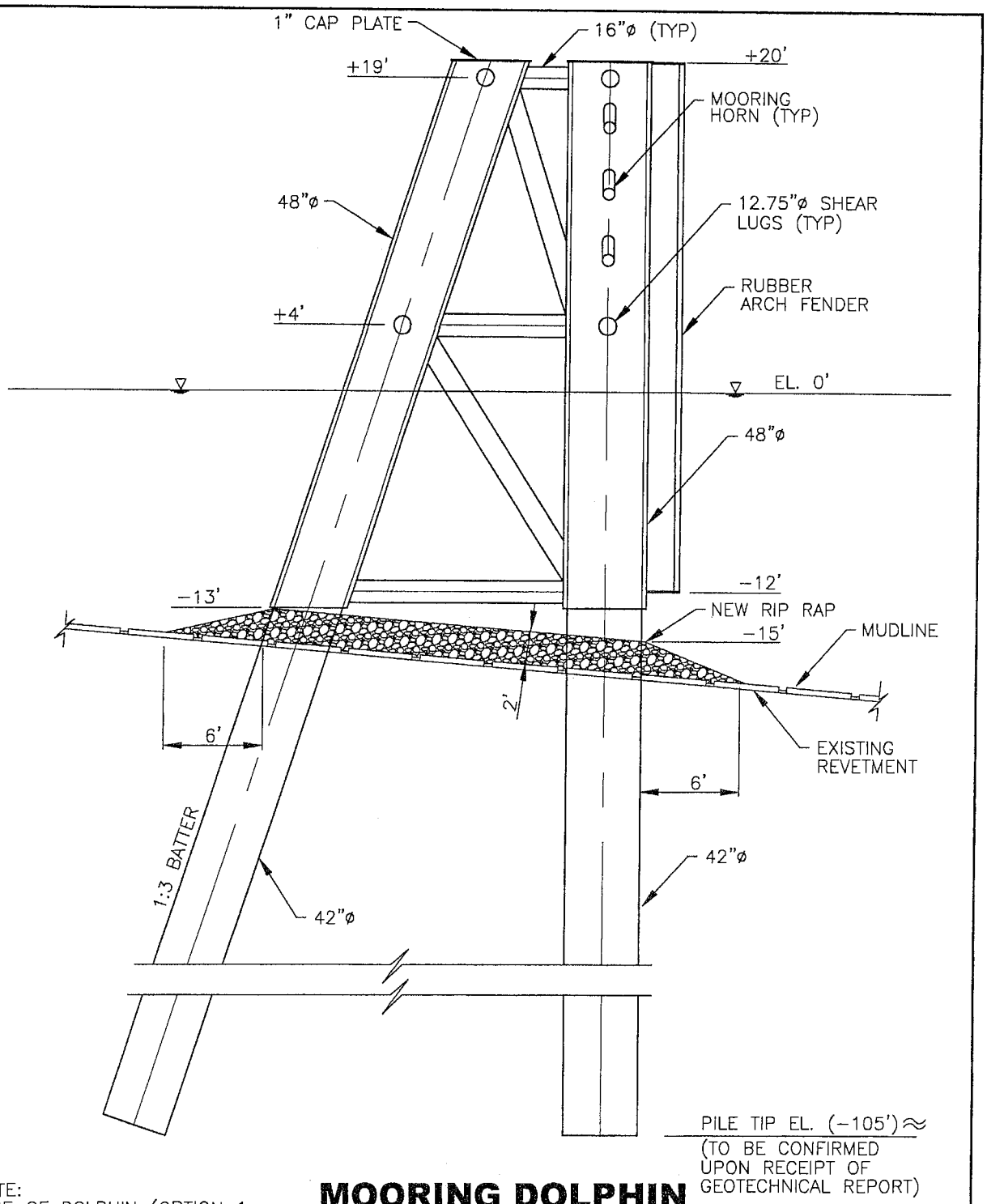

NOTE:
TYPE OF DOLPHIN (OPTION 1 TRIPOD OR OPTION 2 MONOPILE) WILL BE CONFIRMED UPON RECEIPT OF GEOTECHNICAL REPORT.

MOORING DOLPHIN
ELEVATION (OPTION 1)

SCALE 1/8"=1'-0"

WALDEMAR S. NELSON AND COMPANY
INCORPORATED
ENGINEERS AND ARCHITECTS
1200 ST. CHARLES AVE. NEW ORLEANS, LA.

CHS, INC.
BARGE MOORING FACILITY
CARLISLE, LA.

DATE	SCALE	JOB NO.	DRAWING NO.
7-15-13	SHOWN	20130128	P5

PLOT DATE: 7/15/13 4:20 P.M. ACAD FILE: 20130128P5a.DWG

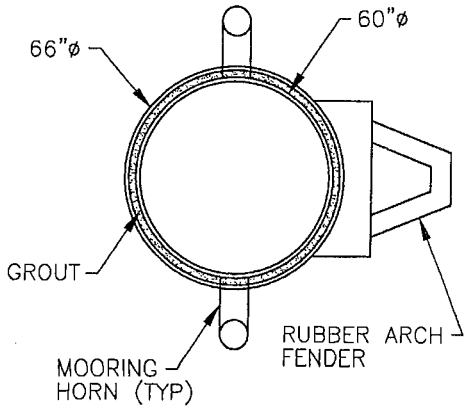

PLAN

SCALE 1/4"=1'-0"

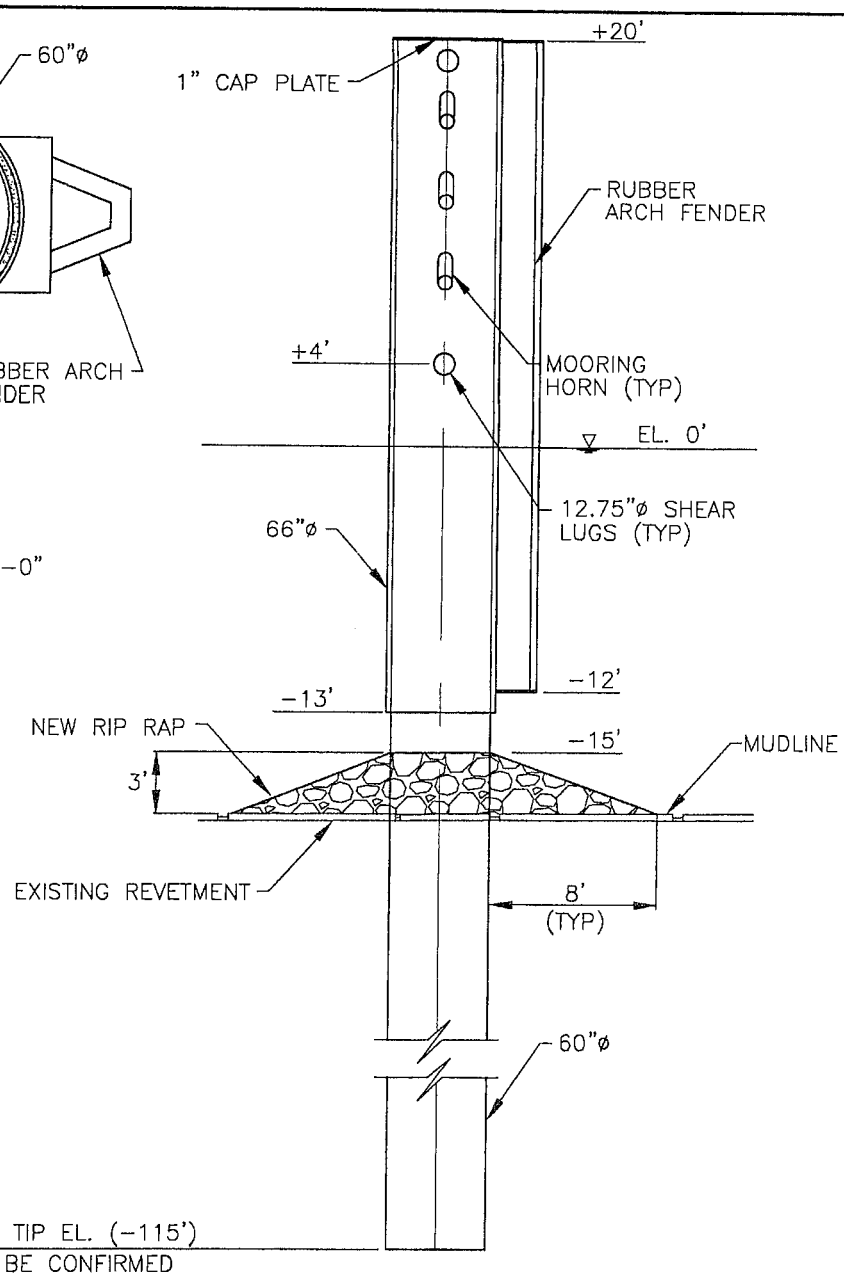

ELEVATION

SCALE 1/8"=1'-0"

MOORING DOLPHIN (OPTION 2)

NOTE:
TYPE OF DOLPHIN (OPTION 1 TRIPOD OR OPTION 2 MONOPILE) WILL BE CONFIRMED UPON RECEIPT OF GEOTECHNICAL REPORT.

WALDEMAR S. NELSON AND COMPANY
INCORPORATED
ENGINEERS AND ARCHITECTS
1200 ST. CHARLES AVE. NEW ORLEANS, LA.

CHS, INC.
BARGE MOORING FACILITY
CARLISLE, LA.

DATE	SCALE	JOB NO.	DRAWING NO.
7-15-13	SHOWN	20130128	P6

PLOT DATE: 7/15/13 4:20 P.M. ACAD FILE: 20130128P6.DWG

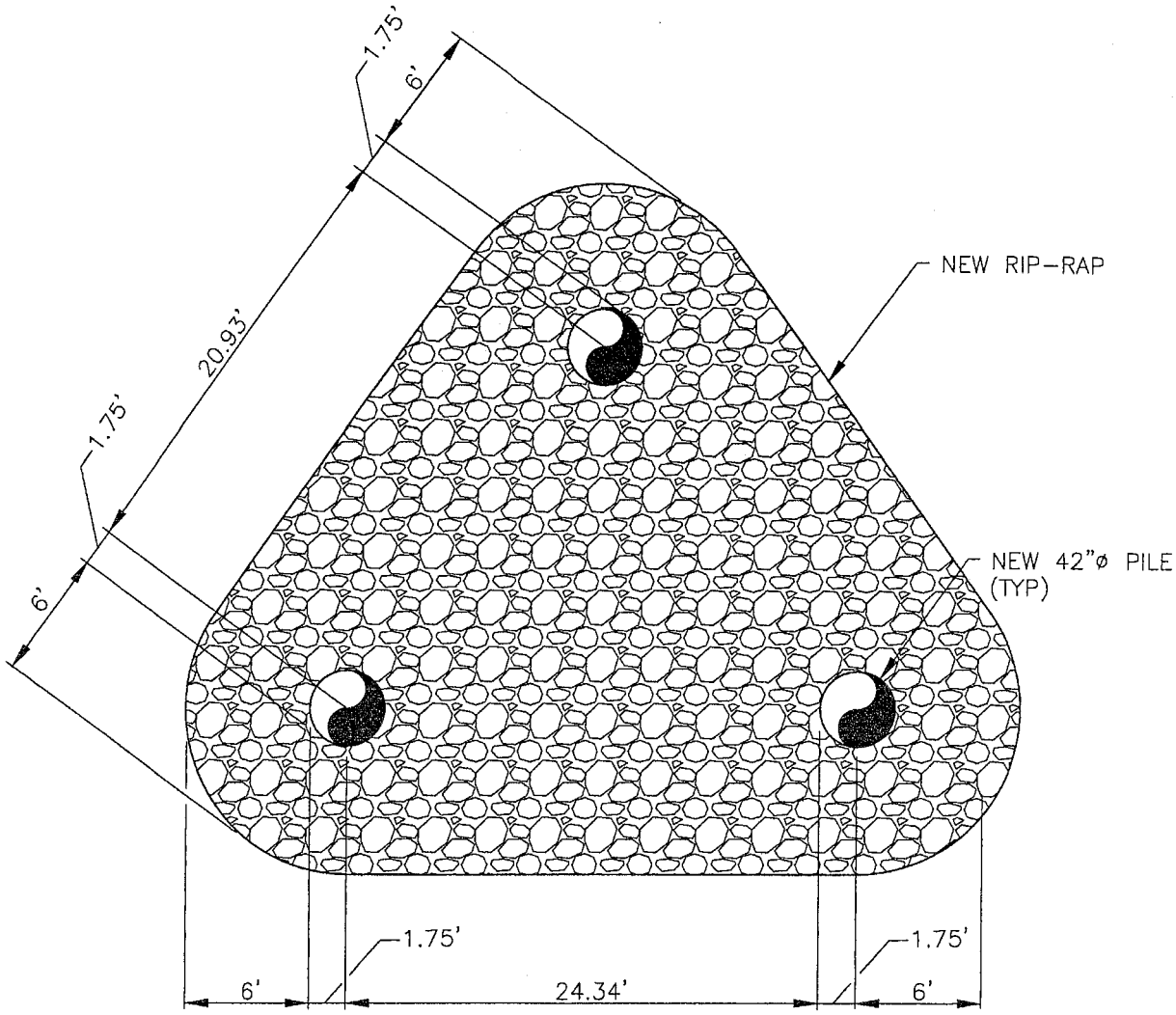

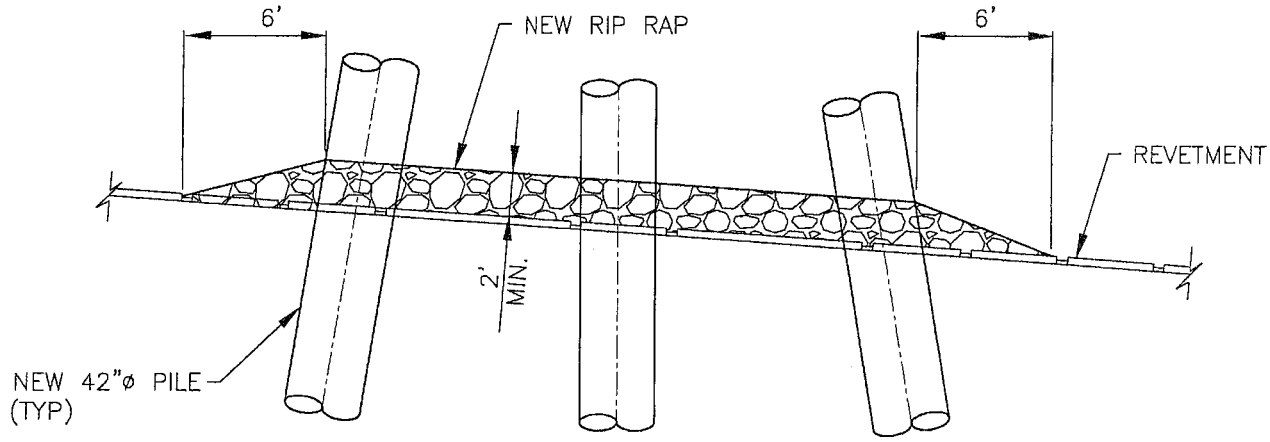

REVETMENT REPAIR DETAIL

(TO CONFORM WITH U.S.A.C.E. STANDARDS)

N.T.S.

WALDEMAR S. NELSON AND COMPANY
INCORPORATED
ENGINEERS AND ARCHITECTS
1200 ST. CHARLES AVE. NEW ORLEANS, LA.

CHS, INC.
BARGE MOORING FACILITY
CARLISLE, LA.

DATE	SCALE	JOB NO.	DRAWING NO.
7-15-13	SHOWN	20130128	P7

PLOT DATE: 7/15/13 4:20 P.M. ACAD FILE: 20130128P7.DWG

GENERAL NOTES

1. AS-BUILT DRAWINGS AND/OR PLATS SHALL HAVE WRITTEN ON THEM THE DATE OF COMPLETION OF SAID ACTIVITIES AND SHALL BE SUBMITTED TO THE LOUISIANA DEPARTMENT OF NATURAL RESOURCES, OFFICE OF COASTAL MANAGEMENT, P. O. BOX 44487, BATON ROUGE, LA. 70804-4487 WITHIN 30 DAYS FOLLOWING PROJECT COMPLETION.

2. ALL STRUCTURES, FACILITIES, WELLS AND PIPELINES/FLOWLINES OCCURING IN OPEN WATER AREAS OR IN OILFIELD CANALS OR SLIPS SHALL BE REMOVED WITHIN 120 DAYS OF ABANDONMENT OF THE FACILITIES FOR THE HEREIN PERMITTED USE UNLESS PRIOR WRITTEN APPROVAL TO LEAVE SUCH STRUCTURES IN PLACE IS RECEIVED FROM THE OFFICE OF COASTAL MANAGEMENT. THIS CONDITION DOES NOT PRECLUDE THE NECESSITY FOR REVISING THE CURRENT PERMIT OR OBTAINING A SEPARATE COASTAL USE PERMIT, SHOULD ONE BE REQUIRED.

3. STRUCTURES MUST ALSO BE MARKED/LIGHTED IN ACCORDANCE WITH U. S. COAST GUARD REGULATIONS.

4. IN ORDER TO ENSURE THE SAFETY OF ALL PARTIES, THE PERMITEE SHALL CONTACT THE LOUISIANA ONE CALL SYSTEM (1-800-272-3020) A MINIMUM OF 48 HOURS PRIOR TO THE COMMENCEMENT OF ANY EXCAVATION (DIGGING, DREDGING, JETTING, ETC.) OR DEMOLITION ACTIVITY.