JOINT PUBLIC NOTICE

December 14, 2015

United States Army Corps of Engineers
New Orleans District
Regulatory Branch
Post Office Box 60267
New Orleans, Louisiana 70160-0267

(504) 862-1301
Project Manager
Neil T. Gauthier
Neil.T.Gauthier@usace.army.mil
MVN 2011-0954-CM

State of Louisiana
Department of Environmental Quality
Office of Environmental Services
Post Office Box 4313
Baton Rouge, Louisiana 70821-4313

(225) 219-3225
Project Manager
Elizabeth Hill
WQC Application Number
103019-01

Interested parties are hereby notified that a permit application has been received by the New Orleans District of the US Army Corps of Engineers pursuant to: [X] Section 10 of the Rivers and Harbors Act of March 3, 1899 (30 Stat. 1151; 33 USC 403); and/or [X] Section 404 of the Clean Water Act (86 Stat. 816; 33 USC 1344).

Application has also been made to the Louisiana Department of Environmental Quality, Office of Environmental Services, for a Water Quality Certification (WQC) in accordance with statutory authority contained in LRS 30:2074 A(3) and provisions of Section 401 of the Clean Water Act.

DREDGING AND CREST WIER CONSTRUCTION FOR MARSH CREATION IN TERREBONNE PARISH

NAME OF APPLICANT: United States Fish and Wildlife Service, c/o Louisiana Coastal Protection and Restoration Authority, Attn: Sydney Dobson, P.O. Box 44027, Baton Rouge, Louisiana 70804.

LOCATION OF WORK: In Lost Lake, Bayou DeCade, and Carencro Bayou, Sections 1, 2, 3, 4, 5, 6, 20, 21, 28, 29, 32, 33, and 34, T19 and 20S-R14E, approximately 23 miles southwesterly from Houma, Louisiana, in Terrebonne Parish, within the West Central Louisiana Coastal Basin in hydrologic unit (HUC 08090302), as shown on the attached drawings.

CHARACTER OF WORK: The applicant has requested Department of the Army authorization to hydraulically dredge Lost Lake and provide material for 643 acres of marsh creation in eight (8) different areas to include terraces. Additionally, five (5) fixed crest weir structures will be replaced with variable crest structures to improve hydrology within two (2) of the semi-impounded marsh creation areas. A dredge pipeline will be installed temporarily for the movement of the dredged material to the marsh creation areas. A permit for the primary activity was issued on February 24, 2014 and modified on November 24, 2014. The following items are additional modifications to the original

authorization. The applicant will add three (3) new areas of creation, modify the location of four (4) terraces, one (1) control structure will be extended, dykes will be modified to increase slope stability, one of the creation areas will be split into two sections to avoid a pipeline, a switch will be made from semi contained dykes to full earthen containment dykes, the depth of the dredged access channel will be increased by dredging, and the dredge pipeline will be buried under Bayou Decade and floated on pontoons to cross Whitson Pipeline and the rock revetment at Bayou Decade. Approximately 8,699,041.25 cubic yards of material will be dredged and deposited in areas of degraded marsh for marsh re-creation and construction of terraces covering 643 acres.

A Preliminary analysis has determined that the proposed project would temporarily impact 608 acres of jurisdictional waters bottoms at the project site.

The applicant has designed the project to avoid and minimize direct and secondary adverse impacts to the maximum extent practicable. The purpose of the project is to create marsh and further protect additional marsh from erosion, therefore not mitigation will be required.

The comment period for the Department of Army will close in **20 days** from the date of this joint public notice. Written comments, including suggestions for modifications or objections to the proposed work, stating reasons thereof, are being solicited from anyone having interest in this permit and/or this WQC request and must be mailed so as to be received before or by the last day of the comment period. Letters concerning the Corps of Engineers permit application must reference the applicant's name and the Permit Application Number, and be mailed to the Corps of Engineers at the address above, **ATTENTION: REGULATORY BRANCH**. Similar letters concerning the Water Quality Certification must reference the applicant's name and the WQC application number and be mailed to the Louisiana Department of Environmental Quality at the address above. Individuals or parties may request an extension of time in which to comment on the proposed work by writing or e-mailing the Corps of Engineers Project Manager listed above. Any request must be specific and substantively supportive of the requested extension, and received by this office prior to the end of the initial comment period. The Section Chief will review the request and the requestor will be promptly notified of the decision to grant or deny the request. If granted, the time extension will be continuous to the initial comment period and, inclusive of the initial comment period, will not exceed a total of 30 calendar days.

The application for this proposed project is on file with the Louisiana Department of Environmental Quality and may be examined during weekdays between 8:00 a.m. and 4:30 p.m. Copies may be obtained upon payment of costs of reproduction.

Corps of Engineers Permit Criteria

The decision whether to issue a permit will be based on an evaluation of the probable impacts, including cumulative impacts of the proposed activity on the public interest. That decision will reflect the national concern for both protection and utilization of important resources. The benefit which reasonably may be expected to accrue from the proposal must be balanced against its reasonably foreseeable detriments. All factors which may be

relevant to the proposal will be considered including the cumulative effects thereof; among those are conservation, economics, aesthetics, general environmental concerns, wetlands, historic properties, fish and wildlife values, flood hazards, floodplain values, land use, navigation, shoreline erosion and accretion, recreation, water supply and conservation, water quality, energy needs, safety, food and fiber production, mineral needs, considerations of property ownership and, in general, the needs and welfare of the people.

The US Army Corps of Engineers is soliciting comments from the public, federal, state, and local agencies and officials, Indian Tribes, and other interested parties in order to consider and evaluate the impacts of this proposed activity. Any comments received will be considered by the US Army Corps of Engineers to determine whether to make, modify, condition, or deny a permit for this proposal. To make this decision, comments are used to assess impacts on endangered species, historic properties, water quality, general environmental effects, and other public interest factors listed above. Comments are used in the preparation of an Environmental Assessment and/or an Environmental Impact Statement pursuant to the National Environmental Policy Act. Comments are also used to determine the need for a public hearing and to determine the overall public interest of the proposed activity.

The New Orleans District is unaware of properties listed on the National Register of Historic Places near the proposed work. The possibility exists that the proposed work may damage or destroy presently unknown archeological, scientific, pre-historical, historical sites, or data. Issuance of this public notice solicits input from the State Archeologist and State Historic Preservation Officer regarding potential impacts to cultural resources.

Our initial finding is that the proposed work would neither affect any species listed as endangered by the U.S. Departments of Interior or Commerce, nor affect any habitat designated as critical to the survival and recovery of any endangered species.

The New Orleans District has determined that the proposed project is located in waters known to be utilized by the West Indian Manatee (*Trichechus manatus*) and determined that the proposed activity is not likely to adversely affect the species based on the Standard Local Operating Procedure for Endangered Species of Louisiana (SLOPES), dated October 22, 2014, between the U.S. Army Corps of Engineers and U.S. Fish and Wildlife Service, Ecological Services Office.

This notice initiates the Essential Fish Habitat (EFH) consultation requirements of the Magnuson-Stevens Fishery Conservation and Management Act. The applicant's proposal would result in the destruction or alteration of up to **608** acres of EFH utilized by various life stages of red drum and penaeid shrimp. Our initial determination is that the proposed action would not have a substantial adverse impact on EFH or federally managed fisheries in the Gulf of Mexico. Our final determination relative to project impacts and the need for mitigation measures is subject to review by and coordination with the National Marine Fisheries Service.

If the proposed work involves deposits of dredged or fill material into navigable waters, the evaluation of the probable impacts will include the application of guidelines established by the Administrator of the Environmental Protection Agency. Also, a certification that the

proposed activity will not violate water quality standards will be required from the Department of Environmental Quality, Office of Environmental Services before a permit is issued.

Any person may request, in writing, within the comment period specified in this notice, that a public hearing be held to consider this application. Requests for public hearings shall state, with particularity, the reasons for holding a public hearing. You are requested to communicate the information contained in this notice to any other parties whom you deem likely to have interest in the matter.

The applicant has certified that the proposed activity described in the application complies with and will be conducted in a manner that is consistent with the Louisiana Coastal Resources Program. The Department of the Army permit will not be issued unless the applicant received approval or a waiver of the Coastal Use Permit by the Department of Natural Resources.

JOHN M. HERMAN
Chief, Central Evaluation Section
Regulatory Branch

Enclosures

INDEX TO SHEETS

SHEET NO.	DESCRIPTION
1	TITLE SHEET
2	PLAN VIEW
3	BORROW AREA LAYOUT
4	MARSH CREATION AREA 1A & 1B LAYOUT
5	MARSH CREATION AREA 2A, 2B, 2C, & 2D LAYOUT
6	MARSH CREATION AREA 3 LAYOUT
7	EARTHEN TERRACE LAYOUT
8	TERRACE COORDINATES
9	TYPICAL BORROW AND ACCESS CHANNEL SECTIONS
10	TYPICAL CONTAINMENT DIKE AND FILL SECTIONS
11	TYPICAL BANK STABILIZATION & CONTAINMENT DIKES & FILL SECTION
12	BAYOU DECADE DREDGE PIPELINE ALIGNMENT
13	BAYOU DECADE REVETTED EMBANKMENT CROSSING
14	PIPELINE CROSSING DETAIL
15	TYPICAL EARTHEN TERRACE SECTION
16	PLANTING LAYOUT AND DETAIL
17-28	WEIR STRUCTURES

STATE OF LOUISIANA
COASTAL PROTECTION AND RESTORATION AUTHORITY

LOST LAKE MARSH CREATION AND HYDROLOGIC RESTORATION PROJECT

TE-72
TERREBONNE PARISH

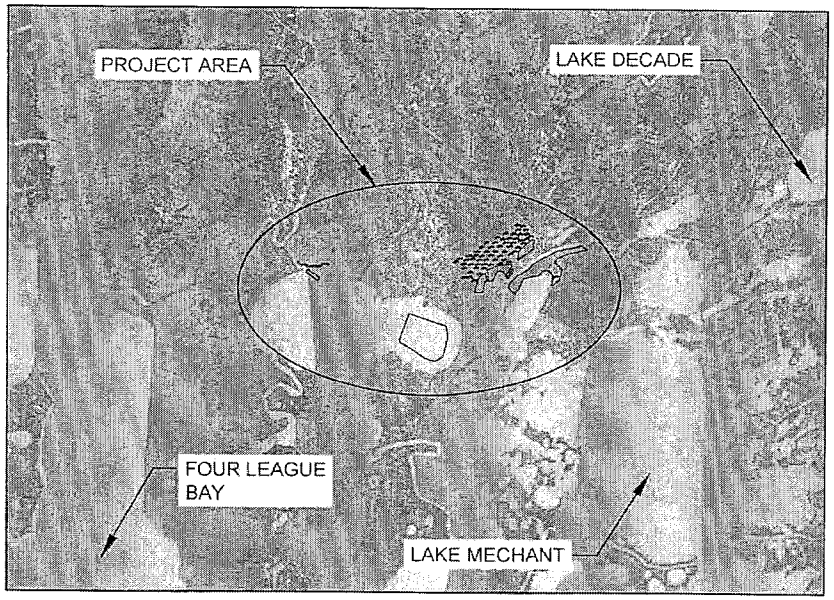

20,000' 10,000' 0' 20,000' 40,000'

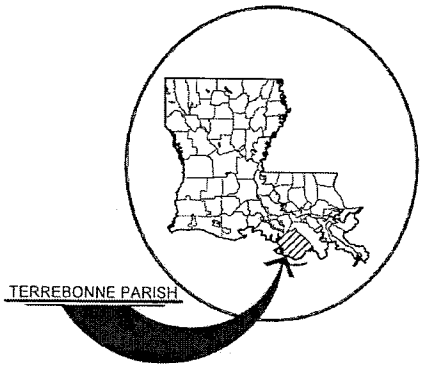

N

NOT FOR CONSTRUCTION

DOCUMENTS ARE NOT TO BE USED FOR CONSTRUCTION, BIDDING, RECORDATION, CONVEYANCE, OR SALES.

APPLICATION BY: UNITED STATES FISH AND WILDLIFE SERVICE 646 CAJUNDOME BLVD SUITE 400 LAFAYETTE, LA 70506	COASTAL PROTECTION AND RESTORATION AUTHORITY 450 LAUREL STREET BATON ROUGE, LOUISIANA 70801		LOST LAKE MARSH CREATION AND HYDROLOGIC RESTORATION PROJECT	TITLE SHEET
			STATE PROJECT NUMBER: TE-72	DATE: OCTOBER 2015
DRAWN BY: SHANE FAUST	DESIGNED BY: S. HAYNES, P.E.	APPROVED BY: RUSS JOFFRION, P.E.	FEDERAL PROJECT NUMBER: TE-72	SHEET 1 OF 28

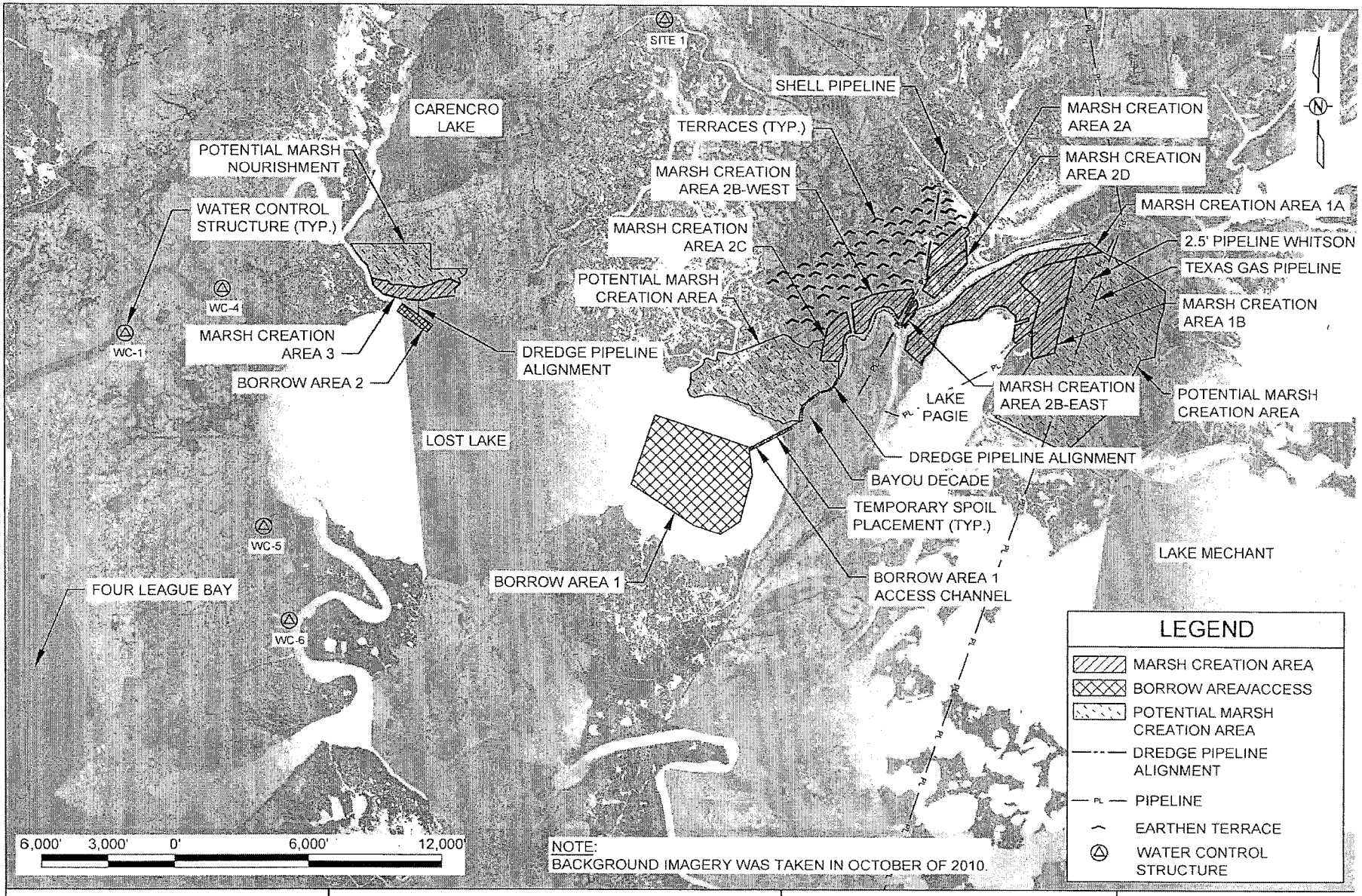

APPLICATION BY: UNITED STATES FISH AND WILDLIFE SERVICE 646 CAJUNDOME BLVD. SUITE 400 LAFAYETTE, LA. 70506	**COASTAL PROTECTION AND RESTORATION AUTHORITY** 450 LAUREL STREET BATON ROUGE, LOUISIANA 70801		LOST LAKE MARSH CREATION AND HYDROLOGIC RESTORATION PROJECT	PLAN VIEW
			STATE PROJECT NUMBER: TE-72	DATE: OCTOBER 2015
DRAWN BY: SHANE FAUST	DESIGNED BY: S. HAYNES, P.E.	APPROVED BY: RUSS JOFFRION, P.E.	FEDERAL PROJECT NUMBER: TE-72	SHEET 2 OF 28

BORROW AREA 2 COORDINATES		
POINT	LONGITUDE	LATITUDE
1	91° 04' 32.78"	29° 21' 22.59"
2	91° 04' 30.08"	29° 21' 25.85"
3	91° 04' 14.61"	29° 21' 16.33"
4	91° 04' 17.45"	29° 21' 13.01"

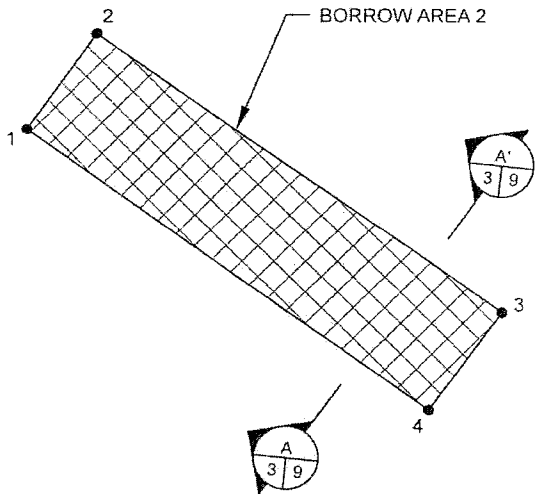

BORROW AREA 1 COORDINATES		
POINT	LONGITUDE	LATITUDE
5	91° 02' 34.57"	29° 20' 04.59"
6	91° 02' 22.29"	29° 20' 35.93"
7	91° 01' 34.65"	29° 20' 21.47"
8	91° 01' 32.94"	29° 20' 08.78"
9	91° 01' 39.14"	29° 19' 47.45"
10	91° 01' 49.24"	29° 19' 41.70"
11	91° 02' 02.72"	29° 19' 45.78"

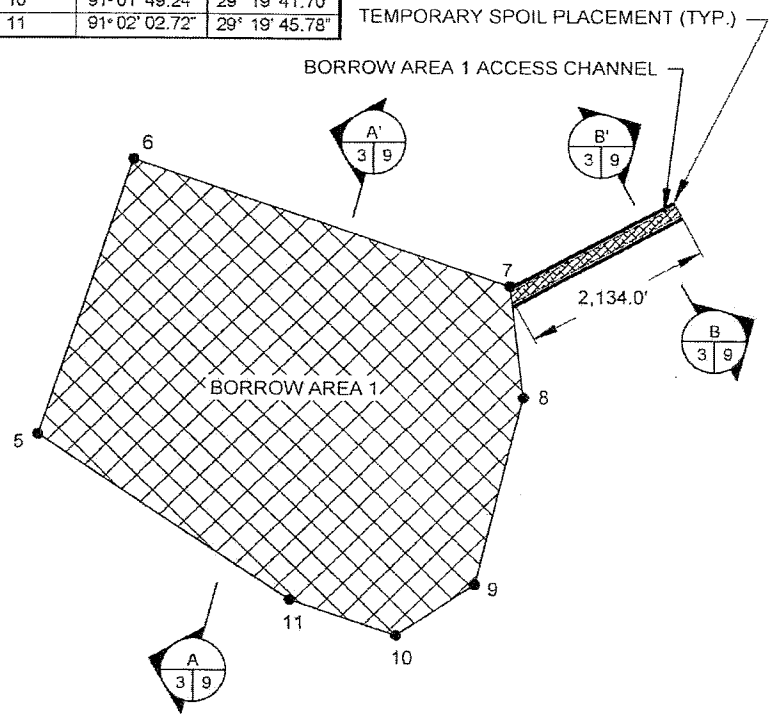

NOTES:
1. BORROW AREA 1 CONTAINS APPROXIMATELY 7,460,572.00 CUBIC YARDS OF MATERIAL.
2. BORROW AREA 2 CONTAINS APPROXIMATELY 259,689.75 CUBIC YARDS OF MATERIAL.

600' 300' 0' 600' 1,200'

2,000' 1,000' 0' 2,000' 4,000'

APPLICATION BY: UNITED STATES FISH AND WILDLIFE SERVICE 646 CAJUNDOME BLVD. SUITE 400 LAFAYETTE, LA 70506	COASTAL PROTECTION AND RESTORATION AUTHORITY 450 LAUREL STREET BATON ROUGE, LOUISIANA 70801	LOST LAKE MARSH CREATION AND HYDROLOGIC RESTORATION PROJECT	BORROW AREA LAYOUT
		STATE PROJECT NUMBER: TE-72	DATE: OCTOBER 2015
DRAWN BY: SHANE FAUST	DESIGNED BY: S. HAYNES, P.E. / APPROVED BY: RUSS JOFFRION, P.E.	FEDERAL PROJECT NUMBER: TE-72	SHEET 3 OF 28

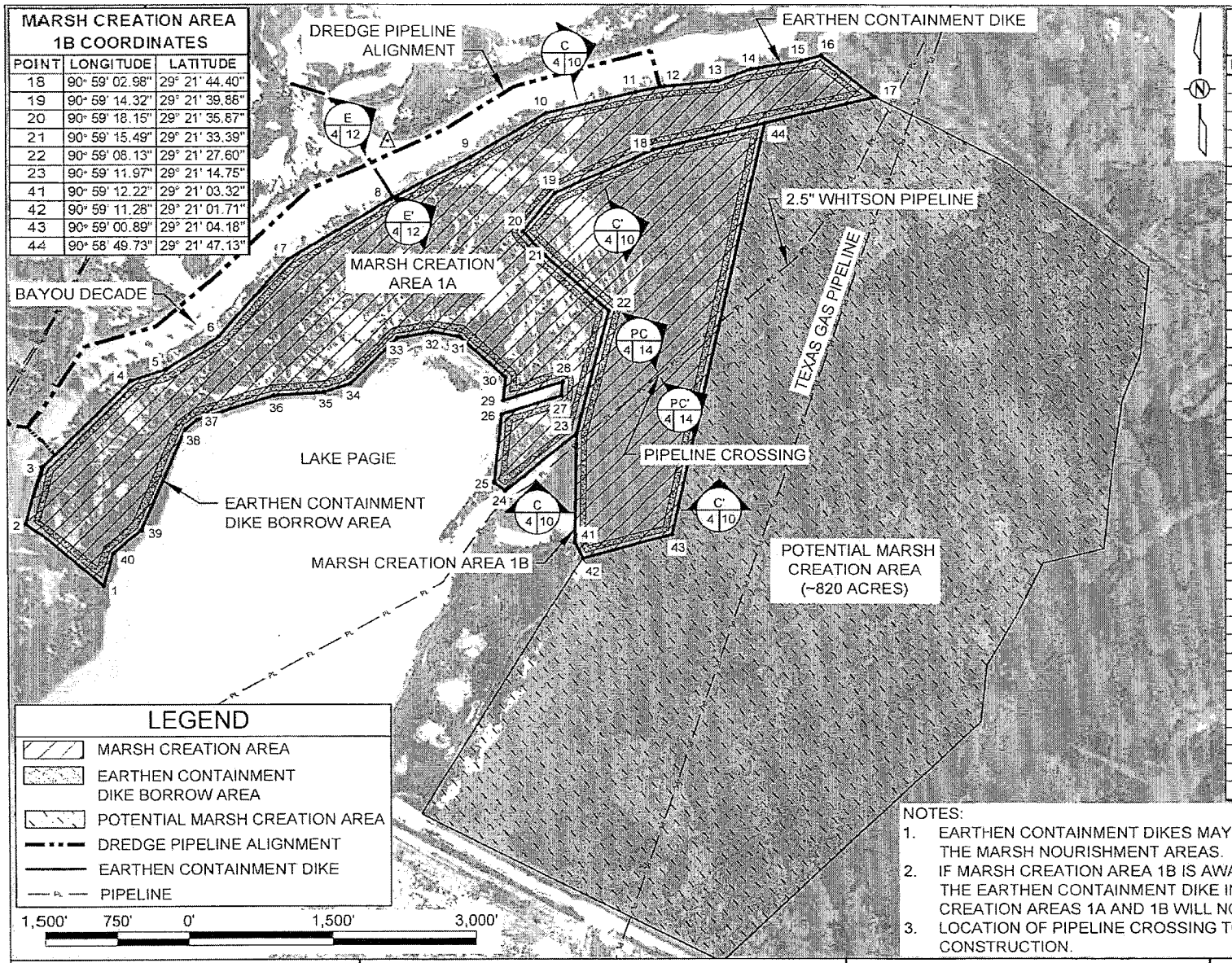

MARSH CREATION AREA 1B COORDINATES

POINT	LONGITUDE	LATITUDE
18	90° 59' 02.98"	29° 21' 44.40"
19	90° 59' 14.32"	29° 21' 39.88"
20	90° 59' 18.15"	29° 21' 35.87"
21	90° 59' 15.49"	29° 21' 33.39"
22	90° 59' 08.13"	29° 21' 27.60"
23	90° 59' 11.97"	29° 21' 14.75"
41	90° 59' 12.22"	29° 21' 03.32"
42	90° 59' 11.28"	29° 21' 01.71"
43	90° 59' 00.89"	29° 21' 04.18"
44	90° 58' 49.73"	29° 21' 47.13"

MARSH CREATION AREA 1A COORDINATES

POINT	LONGITUDE	LATITUDE
1	91° 00' 07.77"	29° 20' 58.96"
2	91° 00' 16.44"	29° 21' 05.56"
3	91° 00' 14.68"	29° 21' 11.53"
4	91° 00' 04.43"	29° 21' 20.47"
5	91° 00' 00.14"	29° 21' 21.68"
6	90° 59' 53.84"	29° 21' 25.05"
7	90° 59' 45.75"	29° 21' 33.03"
8	90° 59' 33.75"	29° 21' 39.33"
9	90° 59' 24.33"	29° 21' 43.67"
10	90° 59' 15.33"	29° 21' 48.17"
11	90° 59' 05.04"	29° 21' 50.39"
12	90° 59' 01.67"	29° 21' 50.97"
13	90° 58' 55.38"	29° 21' 51.47"
14	90° 58' 51.40"	29° 21' 52.72"
15	90° 58' 45.41"	29° 21' 53.57"
16	90° 58' 43.11"	29° 21' 54.09"
17	90° 58' 36.82"	29° 21' 49.79"
18	90° 59' 02.98"	29° 21' 44.40"
19	90° 59' 14.32"	29° 21' 39.88"
20	90° 59' 18.15"	29° 21' 35.87"
21	90° 59' 15.49"	29° 21' 33.39"
22	90° 59' 08.13"	29° 21' 27.60"
23	90° 59' 11.97"	29° 21' 14.75"
24	90° 59' 20.39"	29° 21' 08.80"
25	90° 59' 21.65"	29° 21' 09.69"
26	90° 59' 20.74"	29° 21' 16.80"
27	90° 59' 13.72"	29° 21' 18.75"
28	90° 59' 13.53"	29° 21' 20.21"
29	90° 59' 20.56"	29° 21' 18.26"
30	90° 59' 20.25"	29° 21' 20.66"
31	90° 59' 25.68"	29° 21' 24.99"
32	90° 59' 28.97"	29° 21' 25.46"
33	90° 59' 33.06"	29° 21' 24.83"
34	90° 59' 38.65"	29° 21' 20.10"
35	90° 59' 41.64"	29° 21' 19.19"
36	90° 59' 47.46"	29° 21' 18.86"
37	90° 59' 56.45"	29° 21' 16.39"
38	90° 59' 57.88"	29° 21' 15.45"
39	91° 00' 03.26"	29° 21' 04.81"
40	91° 00' 06.60"	29° 21' 02.38"

NOTES:
1. EARTHEN CONTAINMENT DIKES MAY BE CONSTRUCTED WITHIN THE MARSH NOURISHMENT AREAS.
2. IF MARSH CREATION AREA 1B IS AWARDED FOR CONSTRUCTION, THE EARTHEN CONTAINMENT DIKE IN BETWEEN MARSH CREATION AREAS 1A AND 1B WILL NOT BE CONSTRUCTED.
3. LOCATION OF PIPELINE CROSSING TO BE DETERMINED DURING CONSTRUCTION.

APPLICATION BY:
UNITED STATES FISH AND WILDLIFE SERVICE
646 CAJUNDOME BLVD, SUITE 400
LAFAYETTE, LA. 70506

COASTAL PROTECTION AND RESTORATION AUTHORITY
450 LAUREL STREET
BATON ROUGE, LOUISIANA 70801

LOST LAKE MARSH CREATION AND HYDROLOGIC RESTORATION PROJECT

MARSH CREATION AREA 1A AND 1B LAYOUT

STATE PROJECT NUMBER: TE-72

DATE: OCTOBER 2015

DRAWN BY: SHANE FAUST

DESIGNED BY: S. HAYNES, P.E.

APPROVED BY: RUSS JOFFRION, P.E.

FEDERAL PROJECT NUMBER: TE-72

SHEET 4 OF 28

MARSH CREATION AREA 2A COORDINATES

POINT	LONGITUDE	LATITUDE
76	91° 00' 05.22"	29° 21' 38.79"
77	91° 00' 03.20"	29° 21' 48.87"
78	90° 59' 47.85"	29° 22' 00.93"
79	90° 59' 44.39"	29° 22' 00.11"
80	90° 59' 43.86"	29° 21' 58.20"
81	90° 59' 44.77"	29° 21' 56.88"
82	90° 59' 46.25"	29° 21' 55.97"
83	90° 59' 45.43"	29° 21' 54.24"
84	90° 59' 45.23"	29° 21' 49.90"
85	90° 59' 46.38"	29° 21' 49.93"
86	90° 59' 48.55"	29° 21' 49.12"
87	90° 59' 52.69"	29° 21' 45.55"
88	90° 59' 56.29"	29° 21' 43.46"
89	90° 59' 58.57"	29° 21' 41.86"
90	91° 00' 04.32"	29° 21' 37.73"

MARSH CREATION AREA 2B-WEST COORDINATES

POINT	LONGITUDE	LATITUDE
52	91° 00' 43.15"	29° 21' 26.28"
53	91° 00' 32.77"	29° 21' 30.39"
54	91° 00' 25.23"	29° 21' 31.74"
55	91° 00' 20.28"	29° 21' 32.34"
56	91° 00' 12.60"	29° 21' 33.00"
57	91° 00' 11.98"	29° 21' 31.27"
58	91° 00' 19.80"	29° 21' 19.48"
59	91° 00' 21.65"	29° 21' 22.61"
60	91° 00' 23.46"	29° 21' 24.45"
61	91° 00' 27.48"	29° 21' 24.98"
62	91° 00' 30.70"	29° 21' 23.88"
63	91° 00' 33.09"	29° 21' 20.86"
64	91° 00' 35.15"	29° 21' 15.44"
65	91° 00' 38.11"	29° 21' 12.96"
66	91° 00' 41.50"	29° 21' 12.94"

MARSH CREATION AREA 2C COORDINATES

POINT	LONGITUDE	LATITUDE
41	91° 00' 58.91"	29° 21' 00.51"
42	91° 00' 57.86"	29° 21' 06.48"
43	91° 00' 55.28"	29° 21' 15.44"
44	91° 00' 52.02"	29° 21' 19.00"
45	91° 00' 47.80"	29° 21' 21.89"
46	91° 00' 45.80"	29° 21' 22.55"
47	91° 00' 43.39"	29° 21' 13.48"
48	91° 00' 45.92"	29° 21' 12.68"
49	91° 00' 47.49"	29° 21' 09.76"
50	91° 00' 47.67"	29° 21' 03.24"
51	91° 00' 49.71"	29° 21' 00.41"

MARSH CREATION AREA 2B-EAST COORDINATES

POINT	LONGITUDE	LATITUDE
67	91° 00' 18.31"	29° 21' 16.78"
68	91° 00' 17.53"	29° 21' 16.43"
69	91° 00' 16.56"	29° 21' 16.65"
70	91° 00' 14.54"	29° 21' 18.87"
71	91° 00' 10.97"	29° 21' 23.38"
72	91° 00' 09.93"	29° 21' 25.24"
73	91° 00' 10.02"	29° 21' 26.78"
74	91° 00' 10.36"	29° 21' 27.67"
75	91° 00' 10.95"	29° 21' 28.41"

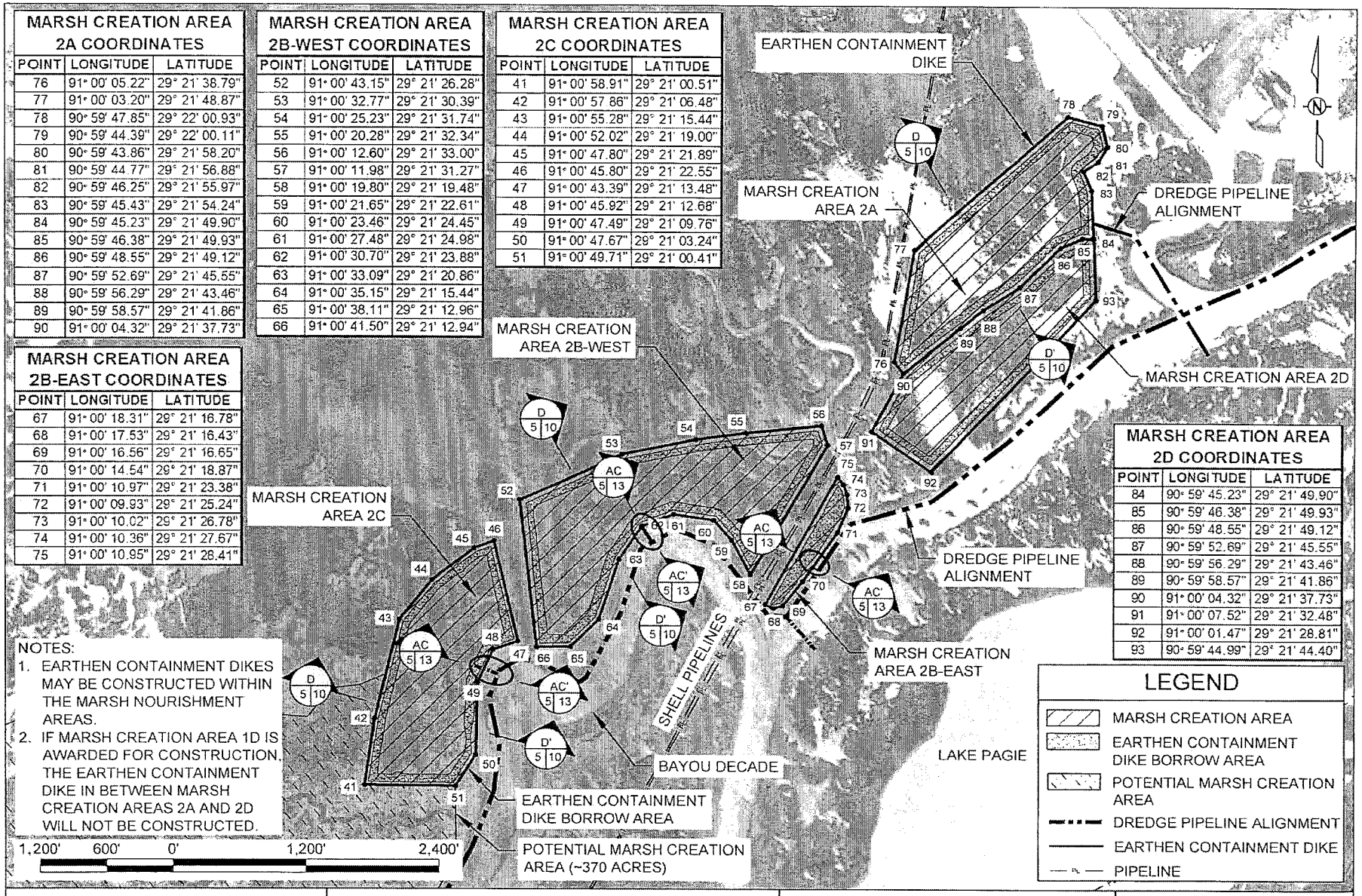

NOTES:
1. EARTHEN CONTAINMENT DIKES MAY BE CONSTRUCTED WITHIN THE MARSH NOURISHMENT AREAS.
2. IF MARSH CREATION AREA 1D IS AWARDED FOR CONSTRUCTION, THE EARTHEN CONTAINMENT DIKE IN BETWEEN MARSH CREATION AREAS 2A AND 2D WILL NOT BE CONSTRUCTED.

MARSH CREATION AREA 2D COORDINATES

POINT	LONGITUDE	LATITUDE
84	90° 59' 45.23"	29° 21' 49.90"
85	90° 59' 46.38"	29° 21' 49.93"
86	90° 59' 48.55"	29° 21' 49.12"
87	90° 59' 52.69"	29° 21' 45.55"
88	90° 59' 56.29"	29° 21' 43.46"
89	90° 59' 58.57"	29° 21' 41.86"
90	91° 00' 04.32"	29° 21' 37.73"
91	91° 00' 07.52"	29° 21' 32.48"
92	91° 00' 01.47"	29° 21' 28.81"
93	90° 59' 44.99"	29° 21' 44.40"

LEGEND

- MARSH CREATION AREA
- EARTHEN CONTAINMENT DIKE BORROW AREA
- POTENTIAL MARSH CREATION AREA
- DREDGE PIPELINE ALIGNMENT
- EARTHEN CONTAINMENT DIKE
- PIPELINE

APPLICATION BY: UNITED STATES FISH AND WILDLIFE SERVICE, 646 CAJUNDOME BLVD. SUITE 400, LAFAYETTE, LA. 70506	COASTAL PROTECTION AND RESTORATION AUTHORITY, 450 LAUREL STREET, BATON ROUGE, LOUISIANA 70801	LOST LAKE MARSH CREATION AND HYDROLOGIC RESTORATION PROJECT	MARSH CREATION AREA 2A, 2B, 2C, & 2D LAYOUT
		STATE PROJECT NUMBER: TE-72	DATE: OCTOBER 2015
DRAWN BY: SHANE FAUST	DESIGNED BY: S. HAYNES, P.E. / APPROVED BY: RUSS JOFFRION, P.E	FEDERAL PROJECT NUMBER: TE-72	SHEET 5 OF 28

MARSH CREATION AREA 3 COORDINATES		
POINT	LONGITUDE	LATITUDE
112	91° 04' 44.82"	29° 21' 34.20"
113	91° 04' 44.18"	29° 21' 34.51"
114	91° 04' 42.87"	29° 21' 34.67"
115	91° 04' 40.83"	29° 21' 33.13"
116	91° 04' 39.75"	29° 21' 31.94"
117	91° 04' 39.26"	29° 21' 31.58"
118	91° 04' 30.83"	29° 21' 29.66"
119	91° 04' 29.63"	29° 21' 30.07"
120	91° 04' 27.75"	29° 21' 29.81"
121	91° 04' 27.00"	29° 21' 29.18"
122	91° 04' 19.45"	29° 21' 28.95"
123	91° 04' 18.41"	29° 21' 29.19"
124	91° 04' 17.08"	29° 21' 29.93"
125	91° 04' 15.80"	29° 21' 30.11"
126	91° 04' 14.85"	29° 21' 29.74"
127	91° 04' 5.58"	29° 21' 30.77"
128	91° 04' 3.16"	29° 21' 30.72"

MARSH CREATION AREA 3 COORDINATES		
POINT	LONGITUDE	LATITUDE
129	91° 04' 03.55"	29° 21' 29.26"
130	91° 04' 05.57"	29° 21' 29.28"
131	91° 04' 13.89"	29° 21' 28.26"
132	91° 04' 15.21"	29° 21' 28.25"
133	91° 04' 16.03"	29° 21' 28.25"
134	91° 04' 16.46"	29° 21' 28.51"
135	91° 04' 17.73"	29° 21' 27.81"
136	91° 04' 19.27"	29° 21' 27.45"
137	91° 04' 24.73"	29° 21' 27.64"
138	91° 04' 27.00"	29° 21' 27.69"
139	91° 04' 27.51"	29° 21' 27.56"
140	91° 04' 28.54"	29° 21' 28.42"
141	91° 04' 29.44"	29° 21' 28.54"
142	91° 04' 30.71"	29° 21' 28.10"
143	91° 04' 39.27"	29° 21' 30.02"
144	91° 04' 40.11"	29° 21' 30.26"
145	91° 04' 40.96"	29° 21' 30.89"
146	91° 04' 42.06"	29° 21' 32.09"

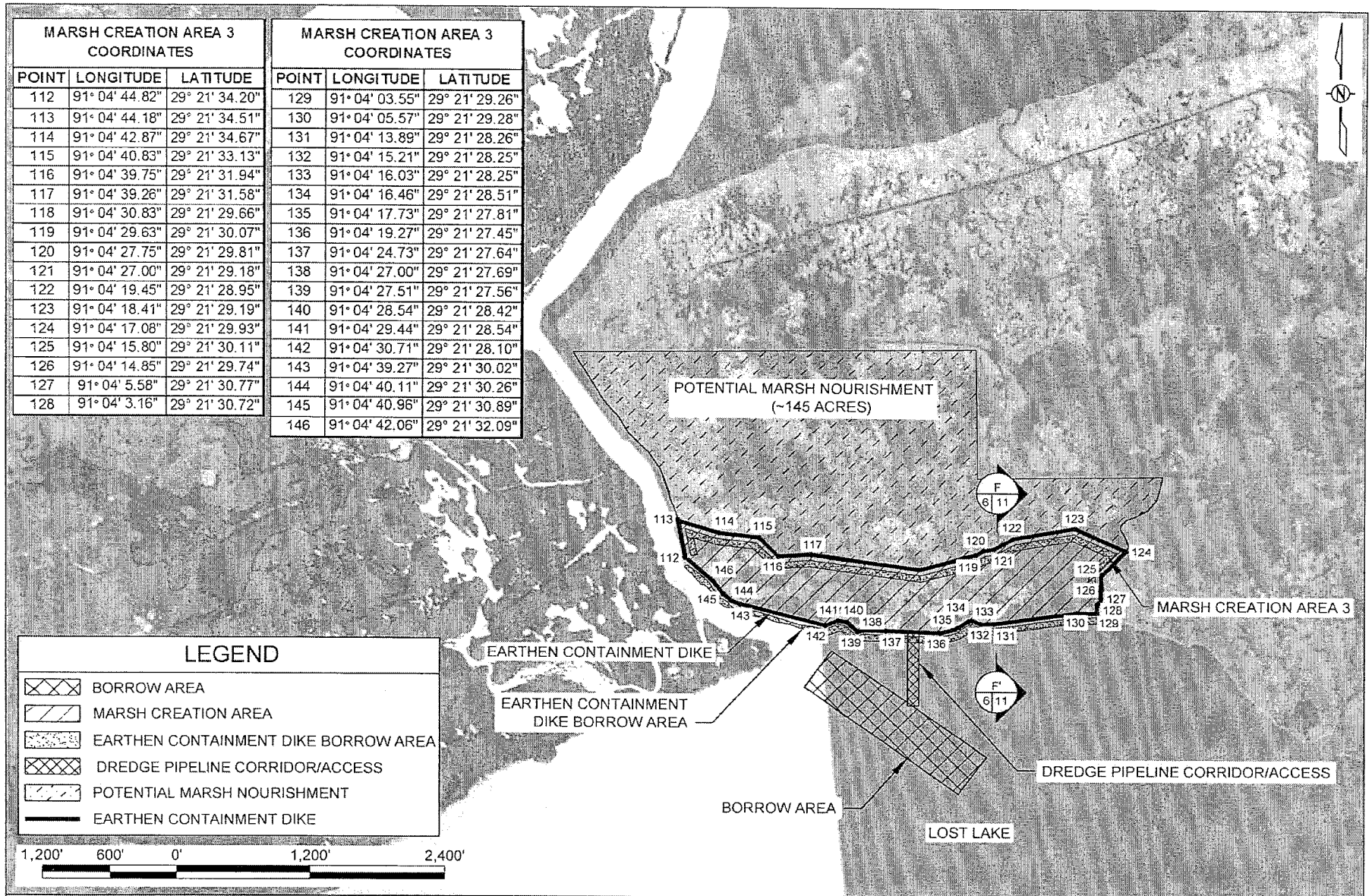

APPLICATION BY:
UNITED STATES FISH AND WILDLIFE SERVICE
646 CAJUNDOME BLVD. SUITE 400
LAFAYETTE, LA. 70506

COASTAL PROTECTION AND RESTORATION AUTHORITY
450 LAUREL STREET
BATON ROUGE, LOUISIANA 70801

LOST LAKE MARSH CREATION AND HYDROLOGIC RESTORATION PROJECT

MARSH CREATION AREA 3 LAYOUT

STATE PROJECT NUMBER: TE-72

DATE: OCTOBER 2015

DRAWN BY: SHANE FAUST

DESIGNED BY: TRAVIS BYLAND, E.I.

APPROVED BY: JASON LANCLOS, P.E.

FEDERAL PROJECT NUMBER: TE-72

SHEET 6 OF 28

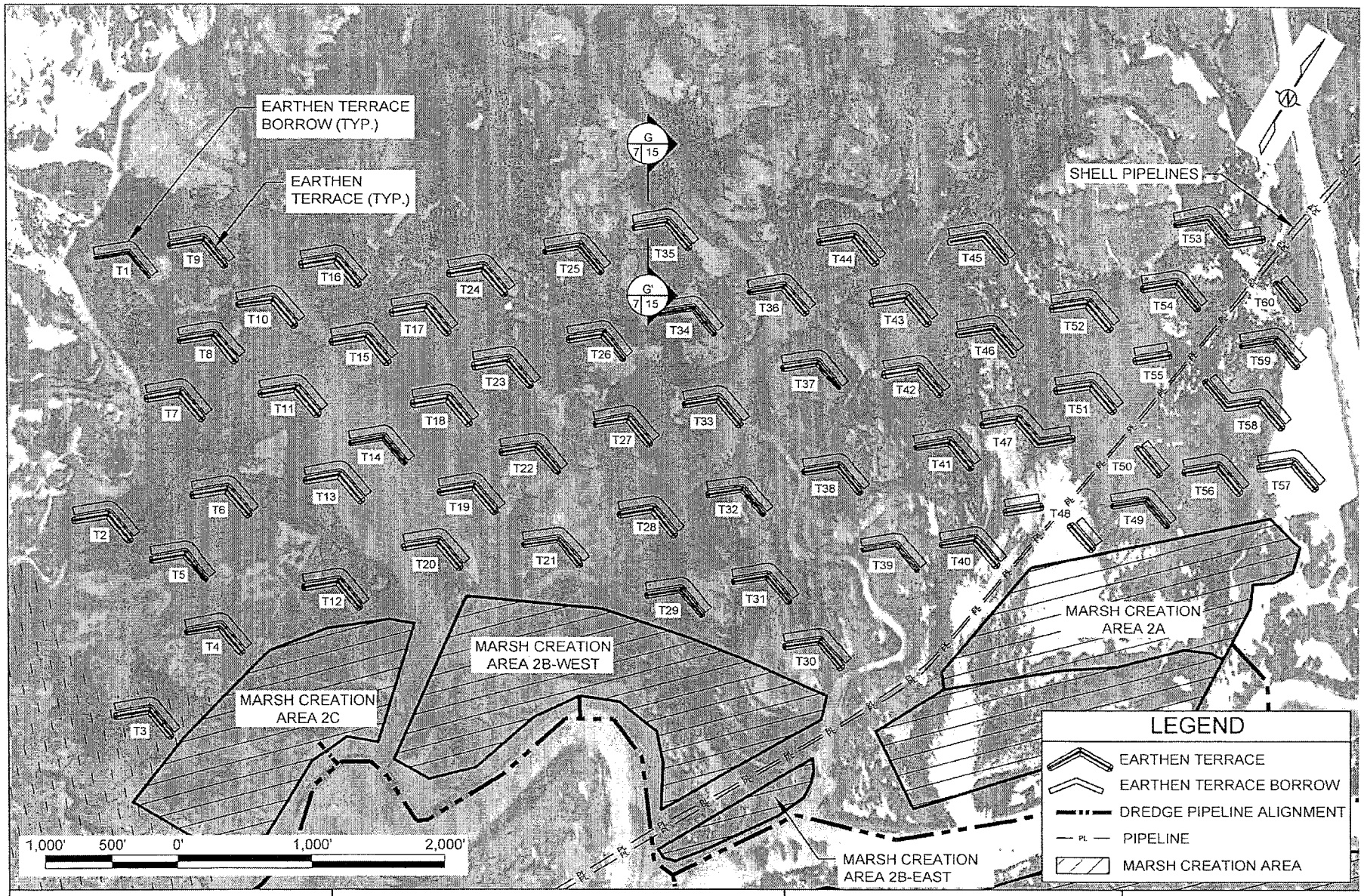

APPLICATION BY: UNITED STATES FISH AND WILDLIFE SERVICE 646 CAJUNDOME BLVD. SUITE 400 LAFAYETTE, LA. 70506	**COASTAL PROTECTION AND RESTORATION AUTHORITY** 450 LAUREL STREET BATON ROUGE, LOUISIANA 70801	LOST LAKE MARSH CREATION AND HYDROLOGIC RESTORATION PROJECT	EARTHEN TERRACE LAYOUT
		STATE PROJECT NUMBER: TE-72	DATE: OCTOBER 2015
DRAWN BY: SHANE FAUST	DESIGNED BY: S. HAYNES, P.E. / APPROVED BY: RUSS JOFFRION, P.E.	FEDERAL PROJECT NUMBER: TE-72	SHEET 7 OF 28

TERRACE COORDINATES		
TERRACE	LONGITUDE	LATITUDE
T1	91° 01 24.72"	29° 21' 34.66"
	91° 01' 22.54"	29° 21' 36.24"
	91° 01' 19.90'	29° 21' 35.38"
T2	91° 01' 15.09"	29° 21' 16.79"
	91° 01' 12.91"	29° 21' 16.37"
	91° 01' 10.26"	29° 21' 17.50"
T3	91° 01' 03.73"	29° 21' 05.51"
	91° 01' 01.55"	29° 21' 07.09"
	91° 00' 58.90"	29° 21' 06.22"
T4	91° 01' 02.05"	29° 21' 13.61"
	91° 00' 59.87"	29° 21' 15.19"
	91° 00' 57.22"	29° 21' 14.32"
T5	91° 01' 07.69"	29° 21' 17.02"
	91° 01' 05.51"	29° 21' 18.60"
	91° 01' 02.86"	29° 21' 17.73"
T6	91° 01' 07.39"	29° 21' 22.86"
	91° 01' 05.21"	29° 21' 24.44"
	91° 01' 02.57"	29° 21' 23.57"
T7	91° 01' 14.91"	29° 21' 27.45"
	91° 01' 12.74"	29° 21' 29.03"
	91° 01' 10.09"	29° 21' 28.16"
T8	91° 01' 14.96"	29° 21' 32.45"
	91° 01' 12.78"	29° 21' 34.02"
	91° 01' 10.13"	29° 21' 33.16"
T9	91° 01' 19.72"	29° 21' 38.28"
	91° 01' 17.54"	29° 21' 39.86"
	91° 01' 14.90"	29° 21' 39.00"
T10	101° 28' 40.52"	37° 24' 33.09"
	101° 28' 38.77"	37° 24' 35.10"
	101° 28' 40.09"	37° 24' 37.32"
T11	101° 28' 47.17"	37° 24' 37.37"
	101° 28' 45.43"	37° 24' 39.39"
	101° 28' 46.74"	37° 24' 41.60"
T12	101° 29' 01.98"	37° 24' 46.26"
	101° 29' 00.23"	37° 24' 48.28"
	101° 29' 01.55"	37° 24' 50.49"
T13	91° 00' 59.85"	29° 21' 27.92"
	91° 00' 57.67"	29° 21' 29.49"
	91° 00' 55.02"	29° 21' 28.63"
T14	91° 00' 58.18"	29° 21' 31.97"
	91° 00' 56.00"	29° 21' 33.55"
	91° 00' 53.35"	29° 21' 32.68"
T15	91° 01' 03.82"	29° 21' 37.93"
	91° 01' 01.65"	29° 21' 39.50"
	91° 00' 59.00"	29° 21' 38.64"
T16	91° 01' 09.34"	29° 21' 41.87"
	91° 01' 07.16"	29° 21' 43.44"
	91° 01' 04.51"	29° 21' 42.58"

TERRACE COORDINATES		
TERRACE	LONGITUDE	LATITUDE
T17	91° 01' 00.64"	29° 21' 42.08"
	91° 00' 58.46"	29° 21' 43.66"
	91° 00' 55.81"	29° 21' 42.79"
T18	91° 00' 55.16"	29° 21' 36.94"
	91° 00' 53.00"	29° 21' 38.51"
	91° 00' 50.36"	29° 21' 37.65"
T19	91° 00' 49.49"	29° 21' 32.13"
	91° 00' 47.31"	29° 21' 33.71"
	91° 00' 44.67"	29° 21' 32.84"
T20	91° 00' 49.70"	29° 21' 27.18"
	91° 00' 47.52"	29° 21' 28.75"
	91° 00' 44.88"	29° 21' 27.89"
T21	91° 00' 41.12"	29° 21' 31.72"
	91° 00' 38.94"	29° 21' 33.30"
	91° 00' 36.29"	29° 21' 32.43"
T22	91° 00' 46.68"	29° 21' 37.00"
	91° 00' 44.50"	29° 21' 38.57"
	91° 00' 41.86"	29° 21' 37.71"
T23	91° 00' 52.34"	29° 21' 41.64"
	91° 00' 50.16"	29° 21' 43.22"
	91° 00' 47.52"	29° 21' 42.35"
T24	91° 00' 58.12"	29° 21' 46.73"
	91° 00' 55.94"	29° 21' 48.30"
	91° 00' 53.29"	29° 21' 47.44"
T25	91° 00' 52.13"	29° 21' 51.64"
	91° 00' 49.95"	29° 21' 53.22"
	91° 00' 47.30"	29° 21' 52.35"
T26	91° 00' 46.68"	29° 21' 46.78"
	91° 00' 44.50"	29° 21' 48.36"
	91° 00' 41.86"	29° 21' 47.49"
T27	91° 00' 41.13"	29° 21' 42.23"
	91° 00' 38.95"	29° 21' 43.80"
	91° 00' 36.30"	29° 21' 42.94"
T28	91° 00' 35.42"	29° 21' 37.23"
	91° 00' 33.24"	29° 21' 38.80"
	91° 00' 30.59"	29° 21' 37.94"
T29	91° 00' 29.91"	29° 21' 32.98"
	91° 00' 27.73"	29° 21' 34.55"
	91° 00' 25.08"	29° 21' 33.69"
T30	91° 00' 17.65"	29° 21' 34.71"
	91° 00' 15.47"	29° 21' 36.29"
	91° 00' 12.83"	29° 21' 35.42"
T31	91° 00' 24.15"	29° 21' 37.06"
	91° 00' 21.97"	29° 21' 38.63"
	91° 00' 19.33"	29° 21' 37.77"
T32	91° 00' 29.75"	29° 21' 41.86"
	91° 00' 27.57"	29° 21' 43.43"
	91° 00' 24.92"	29° 21' 42.57"

TERRACE COORDINATES		
TERRACE	LONGITUDE	LATITUDE
T33	91° 00' 35.34"	29° 21' 46.87"
	91° 00' 33.16"	29° 21' 48.44"
	91° 00' 30.52"	29° 21' 47 58"
T34	91° 00' 41.07"	29° 21' 51.85"
	91° 00' 38.89"	29° 21' 53.43"
	91° 00' 36.24"	29° 21' 52 56"
T35	91° 00' 46.65"	29° 21' 56.51"
	91° 00' 44.47"	29° 21' 58.09"
	91° 00' 41.83"	29° 21' 57 22"
T36	91° 00' 35.41"	29° 21' 56.56"
	91° 00' 33.23"	29° 21' 58.14"
	91° 00' 30.59"	29° 21' 57 27"
T37	91° 00' 29.71"	29° 21' 52.86"
	91° 00' 27.53"	29° 21' 54.44"
	91° 00' 24.88"	29° 21' 53.57"
T38	91° 00' 23.77"	29° 21' 46.85"
	91° 00' 21.59"	29° 21' 48.43"
	91° 00' 18.94"	29° 21' 47.56"
T39	91° 00' 16.21"	29° 21' 43.84"
	91° 00' 14.03"	29° 21' 45.42"
	91° 00' 11.39"	29° 21' 44.55"
T40	91° 00' 10.65"	29° 21' 47.09"
	91° 00' 08.47"	29° 21' 48.66"
	91° 00' 05.82"	29° 21' 47.80"
T41	91° 00' 16.71"	29° 21' 52.53"
	91° 00' 14.54"	29° 21' 54.10"
	91° 00' 11.89"	29° 21' 53.24"
T42	91° 00' 22.11"	29° 21' 56.20"
	91° 00' 19.93"	29° 21' 57.77"
	91° 00' 17.28"	29° 21' 56.91"
T43	91° 00' 26.08"	29° 22' 00.39"
	91° 00' 23.90"	29° 22' 01.97"
	91° 00' 21.25"	29° 22' 01.10"
T44	91° 00' 32.50"	29° 22' 02.42"
	91° 00' 30.32"	29° 22' 03.99"
	91° 00' 27.67"	29° 22' 03.13"
T45	91° 00' 23.00"	29° 22' 07.25"
	91° 00' 20.82"	29° 22' 08.82"
	91° 00' 18.18"	29° 22' 07.96"
T46	91° 00' 18.45"	29° 22' 01.52"
	91° 00' 16.28"	29° 22' 03.10"
	91° 00' 13.63"	29° 22' 02.23"
T47	91° 00' 12.79"	29° 21' 56.53"
	91° 00' 10.62"	29° 21' 58.11"
	91° 00' 08.00"	29° 21' 57.26"
	91° 00' 05.82"	29° 21' 58.84"

TERRACE'S COORDINATES		
TERRACE	LONGITUDE	LATITUDE
T48	91° 00' 07.34"	29° 21' 51.64"
	91° 00' 05.14"	29° 21' 53.23"
	91° 00' 02.09"	29° 21' 53.11"
	90° 59' 59.68"	29° 21' 52.32"
T49	90° 59' 59.98"	29° 21' 55.90"
	90° 59' 57.80"	29° 21' 57.48"
	90° 59' 55.15"	29° 21' 56.61"
T50	91° 00' 03.28"	29° 21' 59.16"
	91° 00' 01.10"	29° 22' 00.74"
	90° 59' 58.45"	29° 21' 59.87"
T51	91° 00' 08.91"	29° 22' 01.44"
	91° 00' 06.73"	29° 22' 03.01"
	91° 00' 04.08"	29° 22' 02.15"
T52	91° 00' 12.71"	29° 22' 06.66"
	91° 00' 10.53"	29° 22' 08.24"
	91° 00' 07.88"	29° 22' 07.37"
T53	91° 00' 07.02"	29° 22' 16.59"
	91° 00' 04.85"	29° 22' 18.17"
	91° 00' 02.20"	29° 22' 17.30"
T54	91° 00' 07.05"	29° 22' 11.24"
	91° 00' 04.87"	29° 22' 12.81"
	91° 00' 02.22"	29° 22' 11.95"
T55	91° 00' 04.14"	29° 22' 06.27"
	91° 00' 01.96"	29° 22' 07.85"
	90° 59' 59.31"	29° 22' 06.98"
T56	90° 59' 56.09"	29° 22' 00.80"
	90° 59' 53.91"	29° 22' 02.38"
	90° 59' 51.26"	29° 22' 01.51"
T57	90° 59' 50.75"	29° 22' 03.85"
	90° 59' 48.57"	29° 22' 05.43"
	90° 59' 45.92"	29° 22' 04.56"
T58	90° 59' 55.80"	29° 22' 06.62"
	90° 59' 53.62"	29° 22' 08.19"
	90° 59' 50.97"	29° 22' 07.33"
T59	90° 59' 57.35"	29° 22' 11.18"
	90° 59' 55.17"	29° 22' 12.75"
	90° 59' 52.52"	29° 22' 11.89"
T60	91° 00' 00.50"	29° 22' 15.23"
	90° 59' 58.33"	29° 22' 16.80"
	90° 59' 55.68"	29° 22' 15.94"

APPLICATION BY:

UNITED STATES FISH AND WILDLIFE SERVICE
646 CAJUNDOME BLVD. SUITE 400
LAFAYETTE, LA 70506

COASTAL PROTECTION AND RESTORATION AUTHORITY
450 LAUREL STREET
BATON ROUGE, LOUISIANA 70801

LOST LAKE MARSH CREATION AND HYDROLOGIC RESTORATION PROJECT

TERRACE COORDINATES

STATE PROJECT NUMBER: TE-72

DATE: OCTOBER 2015

DRAWN BY: SHANE FAUST

DESIGNED BY: S. HAYNES, P.E.

APPROVED BY: RUSS JOFFRION, P.E.

FEDERAL PROJECT NUMBER: TE-72

SHEET 8 OF 28

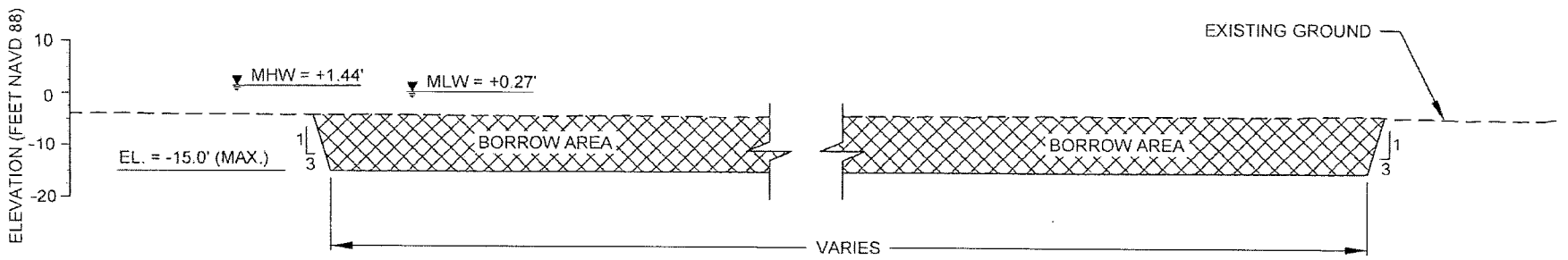

A-A' 9 3 TYPICAL BORROW AREA SECTION

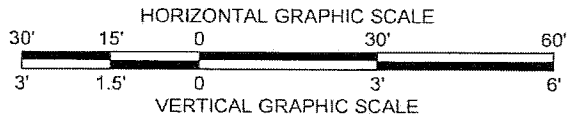

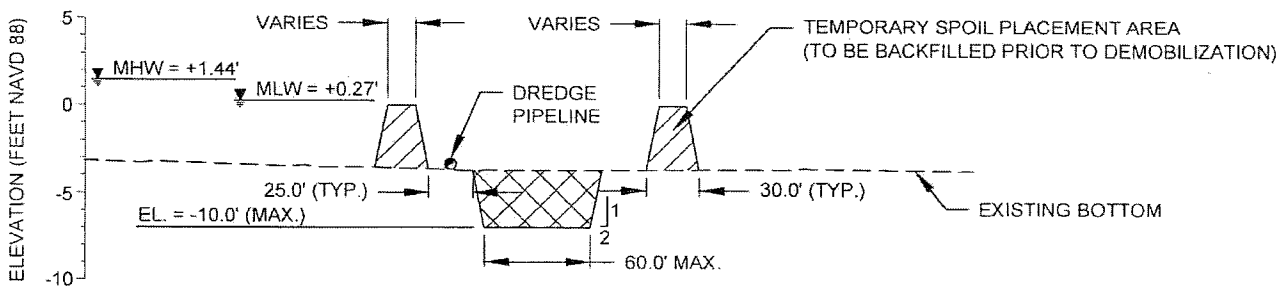

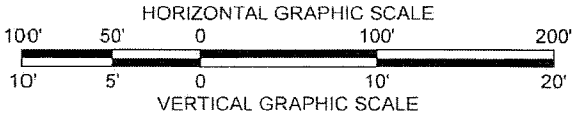

B-B' 9 3 TYPICAL BORROW AREA 1 ACCESS CHANNEL SECTION

APPLICATION BY UNITED STATES FISH AND WILDLIFE SERVICE 646 CAJUNDOME BLVD SUITE 400 LAFAYETTE, LA 70506	COASTAL PROTECTION AND RESTORATION AUTHORITY 450 LAUREL STREET BATON ROUGE, LOUISIANA 70801		LOST LAKE MARSH CREATION AND HYDROLOGIC RESTORATION PROJECT	TYPICAL BORROW AND ACCESS CHANNEL SECTIONS
			STATE PROJECT NUMBER: TE-72	DATE: OCTOBER 2015
DRAWN BY: SHANE FAUST	DESIGNED BY S. HAYNES, P.E.	APPROVED BY: RUSS JOFFRION, P.E.	FEDERAL PROJECT NUMBER: TE-72	SHEET 9 OF 28

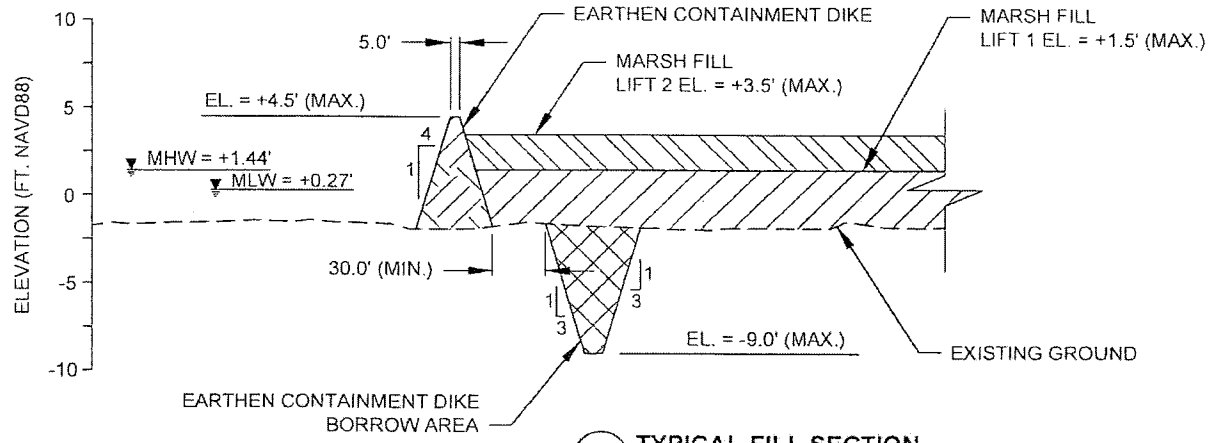

C-C' 10 4 **TYPICAL FILL SECTION**
MARSH CREATION AREA 1A AND 1B

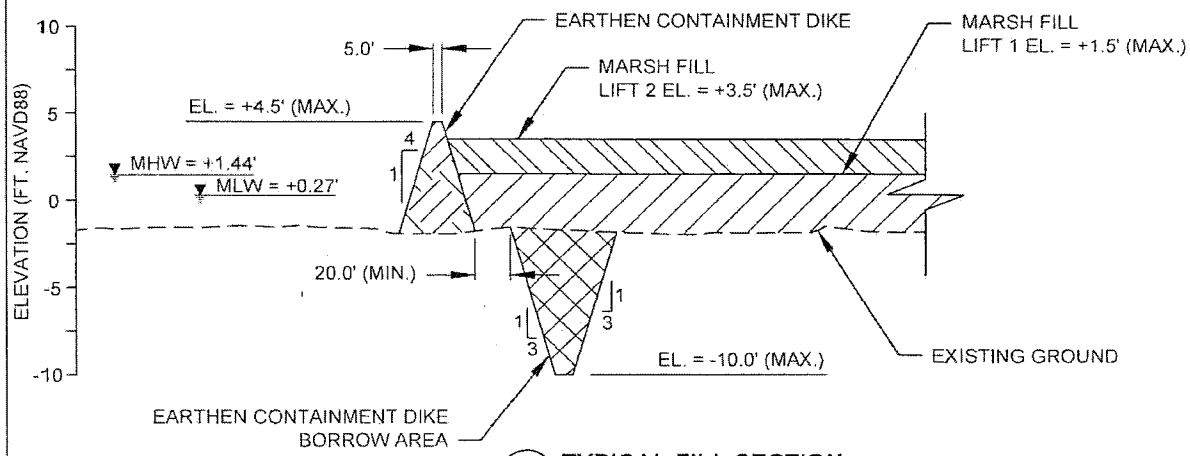

D-D' 10 5 **TYPICAL FILL SECTION**
MARSH CREATION AREAS 2A, 2B (EAST AND WEST), 2C, AND 2D

NOTES:
1. CONTAINMENT DIKES SHALL BE CONSTRUCTED USING IN-SITU MATERIAL.
2. NO DREDGING WILL BE ALLOWED WITHIN 20.0' OR 30.0' OF THE CONTAINMENT DIKE TO EARTHEN CONTAINMENT DIKE BORROW AREAS.

HORIZONTAL GRAPHIC SCALE
100' 50' 0 100' 200'
6' 3' 0 6' 12'
VERTICAL GRAPHIC SCALE

APPLICATION BY: UNITED STATES FISH AND WILDLIFE SERVICE 645 CAJUNDOME BLVD SUITE 400 LAFAYETTE, LA 70508	COASTAL PROTECTION AND RESTORATION AUTHORITY 450 LAUREL STREET BATON ROUGE, LOUISIANA 70801		LOST LAKE MARSH CREATION AND HYDROLOGICAL RESTORATION PROJECT	TYPICAL CONTAINMENT DIKE AND FILL SECTIONS
			STATE PROJECT NUMBER: TE-72	DATE: OCTOBER 2015
DRAWN BY: SHANE FAUST	DESIGNED BY: S. HAYNES, P.E.	APPROVED BY: RUSS JOFFRION, P.E.	FEDERAL PROJECT NUMBER: TE-72	SHEET 10 OF 28

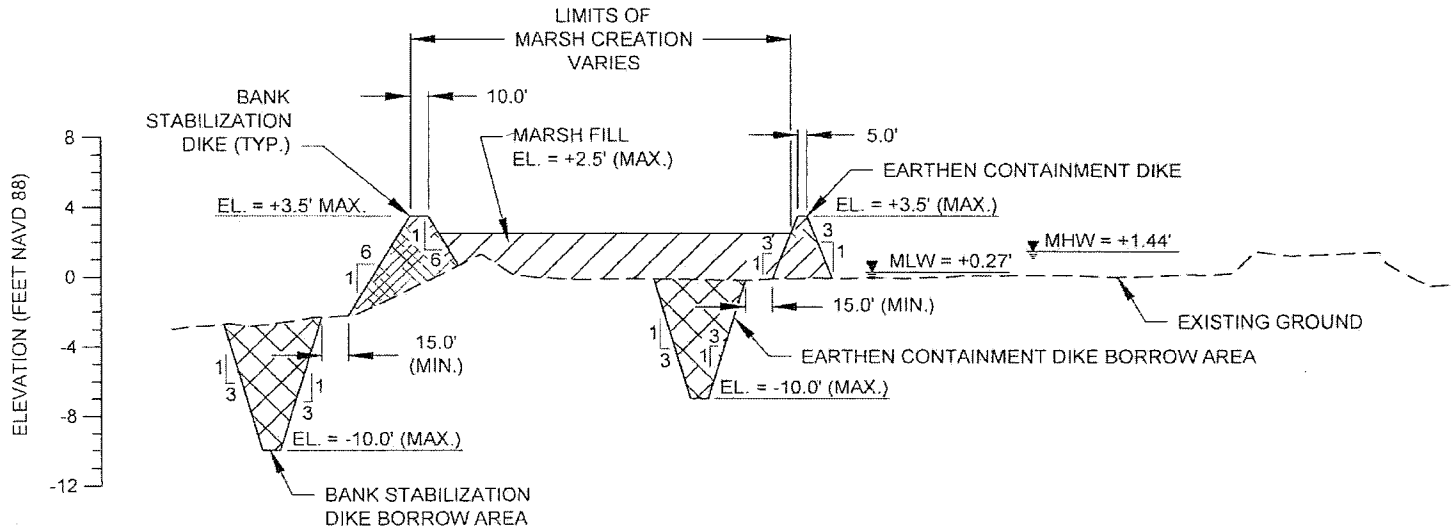

F-F' 11 6 **TYPICAL MARSH FILL AREA 3 SECTION**

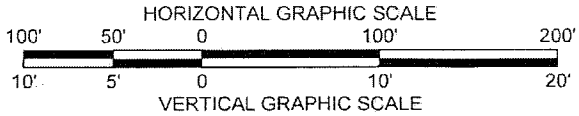

APPLICATION BY: UNITED STATES FISH AND WILDLIFE SERVICE 646 CAJUNDOME BLVD. SUITE 400 LAFAYETTE, LA. 70598	COASTAL PROTECTION AND RESTORATION AUTHORITY 450 LAUREL STREET BATON ROUGE, LOUISIANA 70801		LOST LAKE MARSH CREATION AND HYDROLOGICAL RESTORATION PROJECT	TYPICAL BANK STABILIZATION AND CONTAINMENT DIKES AND FILL SECTION
			STATE PROJECT NUMBER: TE-72	DATE: OCTOBER 2015
DRAWN BY: SHANE FAUST	DESIGNED BY: S. HAYNES, P.E.	APPROVED BY: RUSS JOFFRION, P.E.	FEDERAL PROJECT NUMBER: TE-72	SHEET 11 OF 28

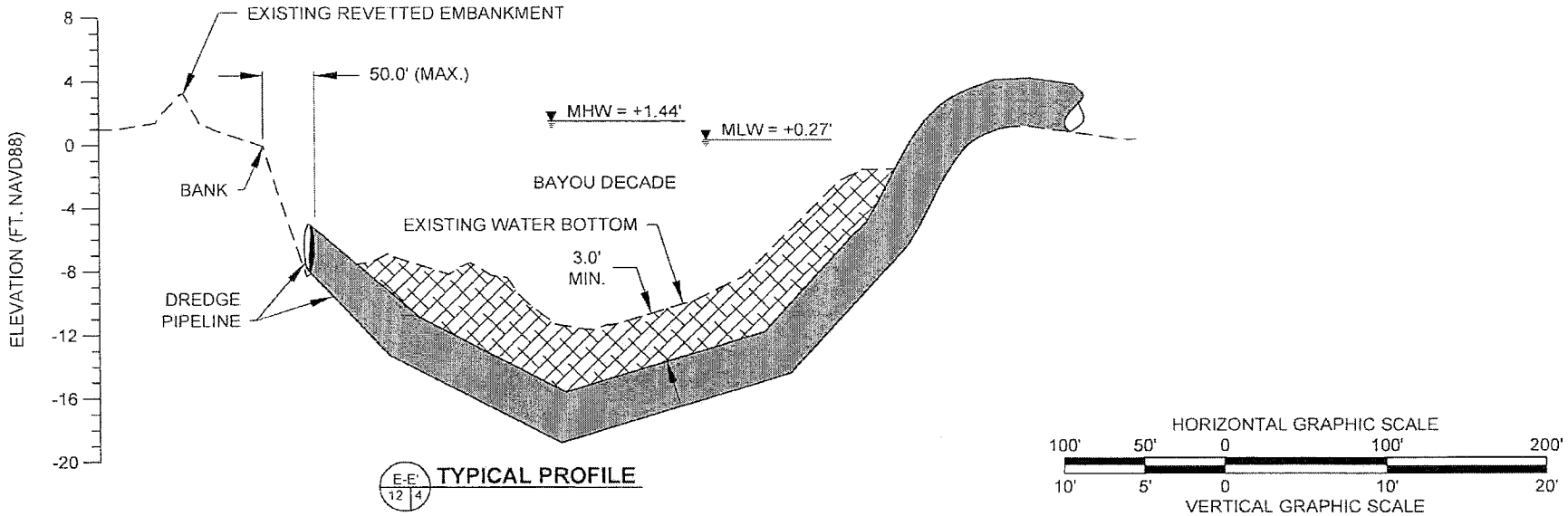

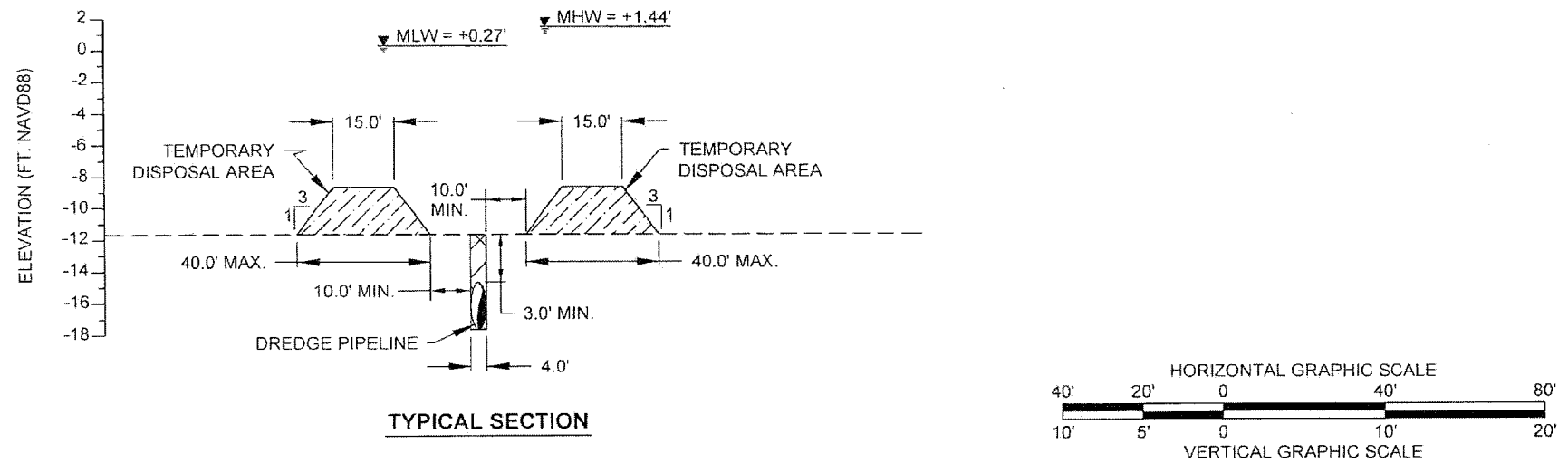

APPLICATION BY: UNITED STATES FISH AND WILDLIFE SERVICE 646 CAJUNDOME BLVD. SUITE 400 LAFAYETTE, LA. 70598	COASTAL PROTECTION AND RESTORATION AUTHORITY 450 LAUREL STREET BATON ROUGE, LOUISIANA 70801		LOST LAKE MARSH CREATION AND HYDROLOGICAL RESTORATION PROJECT	BAYOU DECADE DREDGE PIPELINE ALIGNMENT
			STATE PROJECT NUMBER: TE-72	DATE: OCTOBER 2015
DRAWN BY: SHANE FAUST	DESIGNED BY: S. HAYNES, P.E.	APPROVED BY: RUSS JOFFRION, P.E.	FEDERAL PROJECT NUMBER: TE-72	SHEET 12 OF 28

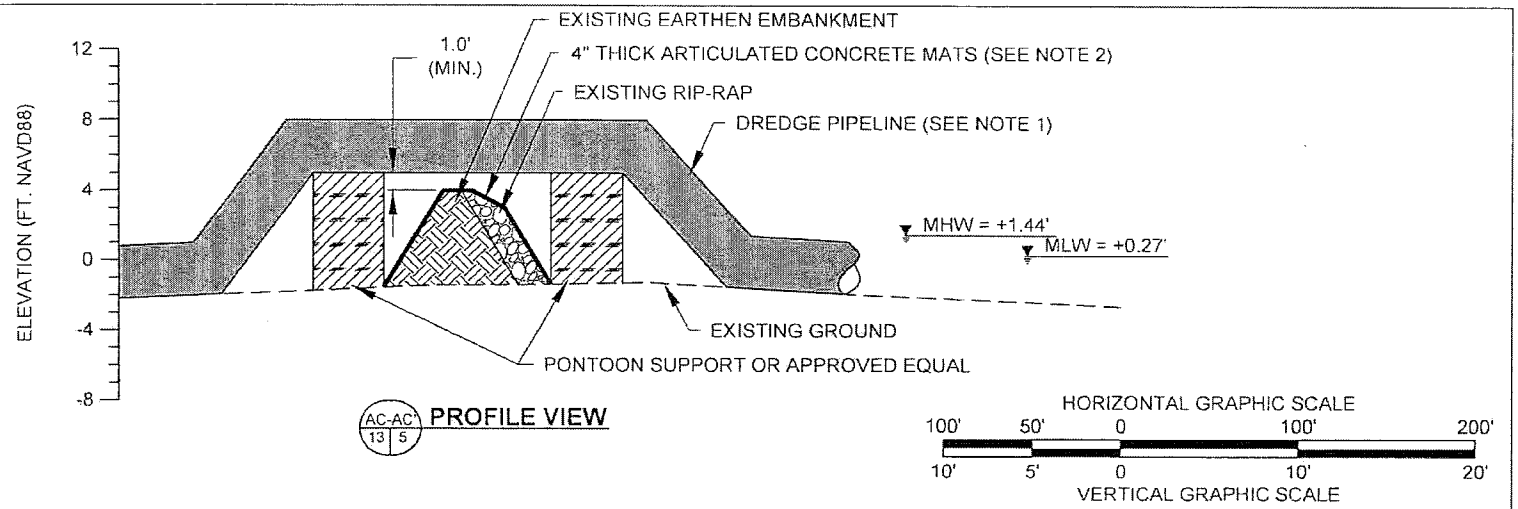

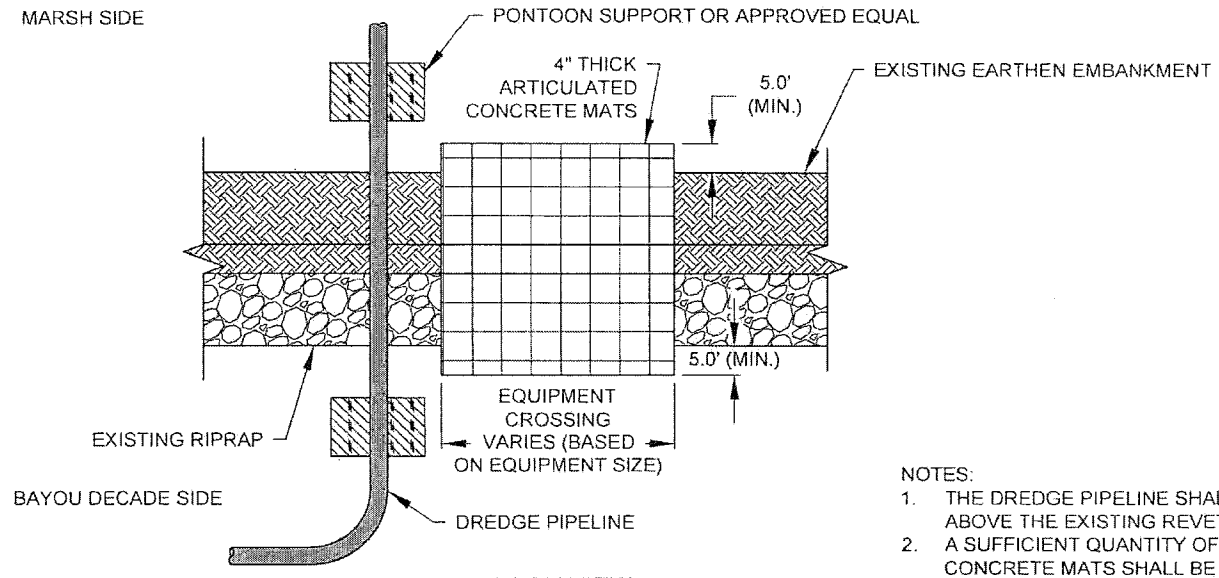

PLAN VIEW
N.T.S

NOTES:
1. THE DREDGE PIPELINE SHALL REMAIN ELEVATED ABOVE THE EXISTING REVETTED EMBANKMENT.
2. A SUFFICIENT QUANTITY OF ARTICULATED CONCRETE MATS SHALL BE PLACED ACROSS THE ENTIRE CROSSING WIDTH TO ENABLE ACCESS FOR EQUIPMENT.

APPLICATION BY: UNITED STATES FISH AND WILDLIFE SERVICE 646 CAJUNDOME BLVD. SUITE 400 LAFAYETTE, LA. 70598	COASTAL PROTECTION AND RESTORATION AUTHORITY 450 LAUREL STREET BATON ROUGE, LOUISIANA 70801		LOST LAKE MARSH CREATION AND HYDROLOGICAL RESTORATION PROJECT	BAYOU DECADE REVETTED EMBANKMENT CROSSING
			STATE PROJECT NUMBER: TE-72	DATE: OCTOBER 2015
DRAWN BY: SHANE FAUST	DESIGNED BY: S. HAYNES, P.E	APPROVED BY: RUSS JOFFRION, P.E.	FEDERAL PROJECT NUMBER: TE-72	SHEET 13 OF 28

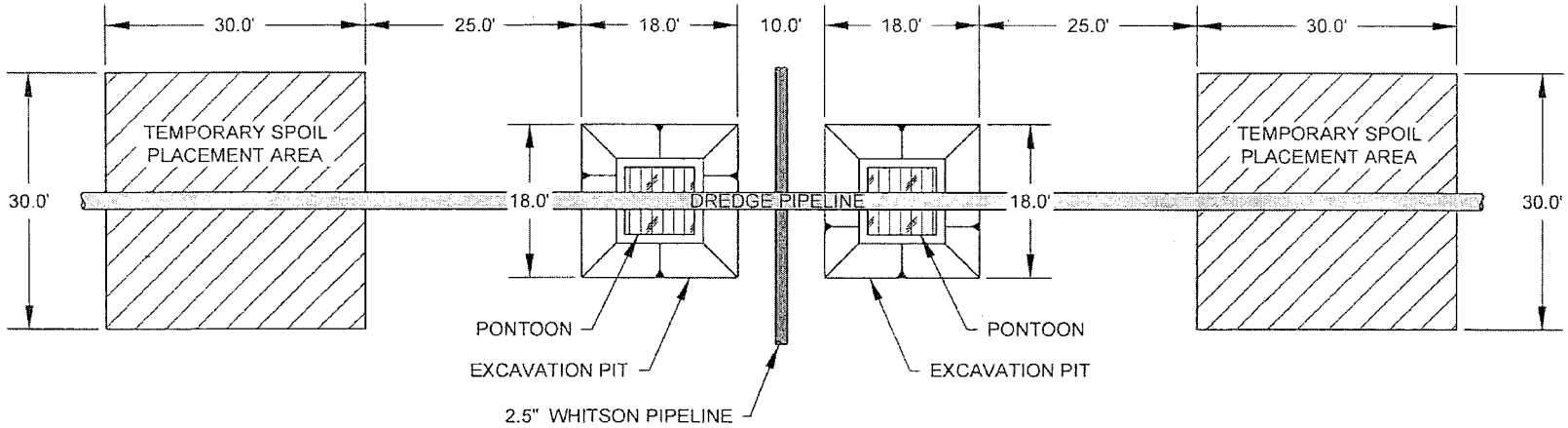

PLAN VIEW

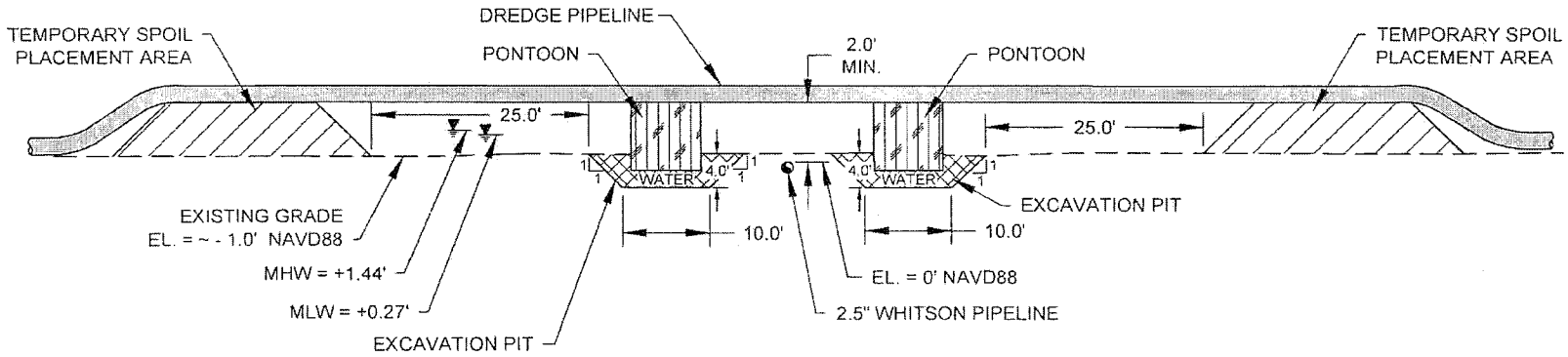

SECTION VIEW

10' 5' 0' 10' 20'

PC-PC 14 4

PIPELINE CROSSING DETAIL

NOT TO SCALE

NOTES:
1. SPOIL TO BE BACKFILLED.
2. PONTOONS AND PIPELINE TO BE ANCHORED.

APPLICATION BY: UNITED STATES FISH AND WILDLIFE SERVICE (USFWS) 646 CAJUNDOME BLVD. SUITE 400 LAFAYETTE, LA. 70506	COASTAL PROTECTION AND RESTORATION AUTHORITY 450 LAUREL STREET BATON ROUGE, LOUISIANA 70801		LOST LAKE MARSH CREATION AND HYDROLOGIC RESTORATION PROJECT	PIPELINE CROSSING DETAIL
			STATE PROJECT NUMBER: TE-72	DATE: OCTOBER 2015
DRAWN BY: K. CANTU	DESIGNED BY: S. HAYNES, P.E.	APPROVED BY: R. JOFFRION, P.E.	FEDERAL PROJECT NUMBER: TE-72	SHEET 14 OF 28

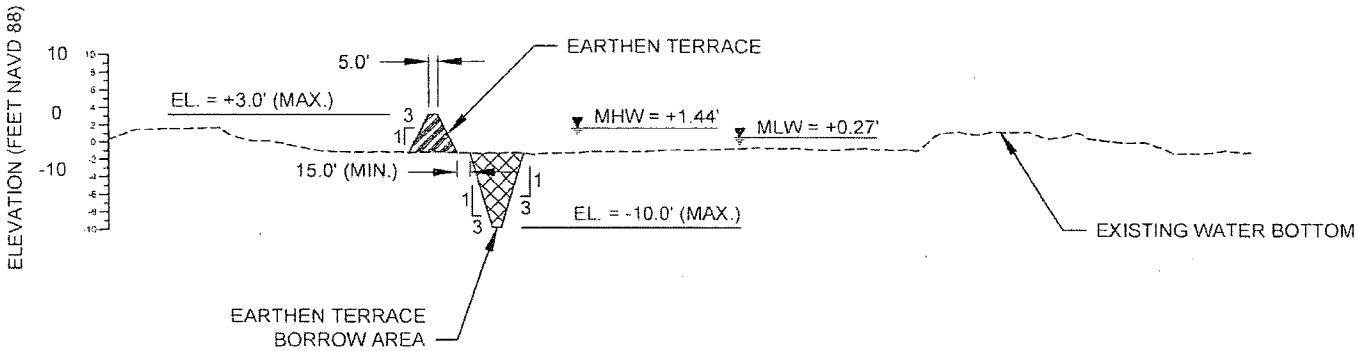

G-G' 15 7 **TYPICAL EARTHEN TERRACE SECTION**

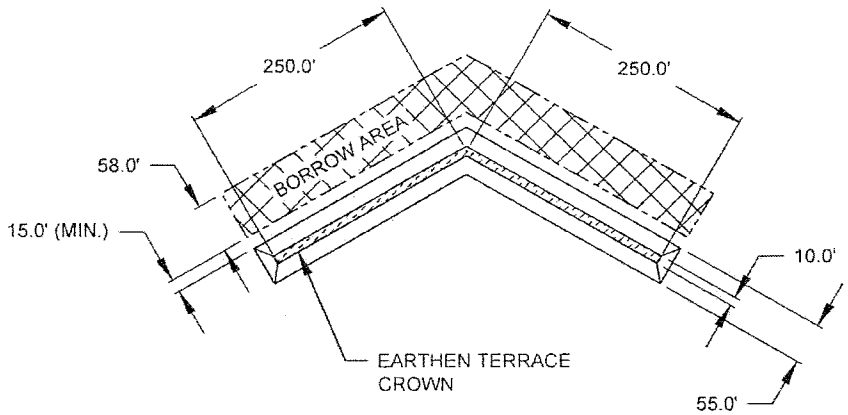

NOTE:
EXACT LOCATION OF THE EARTHEN TERRACES SHALL BE DETERMINED ON SITE AND WILL NOT DISTURB ANY EXISTING MARSH.

TYPICAL EARTHEN TERRACE
PLAN VIEW

HORIZONTAL GRAPHIC SCALE
200' 100' 0 200' 400'
20' 10' 0 20' 40'
VERTICAL GRAPHIC SCALE

APPLICATION BY: UNITED STATES FISH AND WILDLIFE SERVICE 646 CAJUNDOME BLVD. SUITE 400 LAFAYETTE, LA. 70598	COASTAL PROTECTION AND RESTORATION AUTHORITY 450 LAUREL STREET BATON ROUGE, LOUISIANA 70801		LOST LAKE MARSH CREATION AND HYDROLOGICAL RESTORATION PROJECT	TYPICAL EARTHEN TERRACE SECTION
			STATE PROJECT NUMBER: TE-72	DATE: OCTOBER 2015
DRAWN BY: SHANE FAUST	DESIGNED BY: S. HAYNES, P.E.	APPROVED BY: RUSS JOFFRION, P.E.	FEDERAL PROJECT NUMBER: TE-72	SHEET 15 OF 28

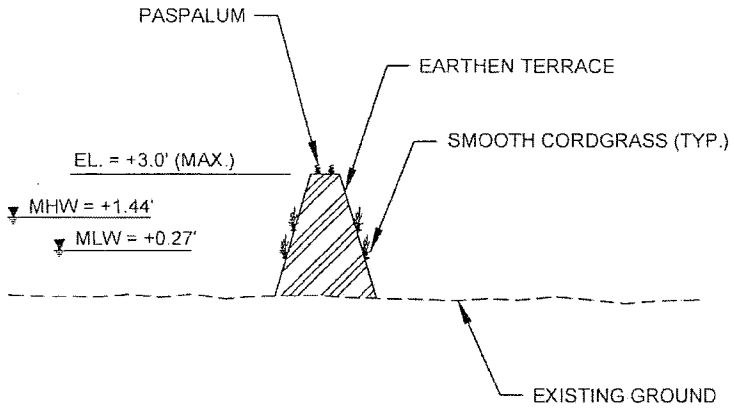

TYPICAL TERRACE PLANTING SECTION

(NTS)

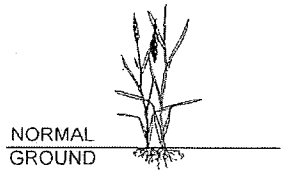

TYPICAL PLANTING
SMOOTH CORDGRASS
PLUG

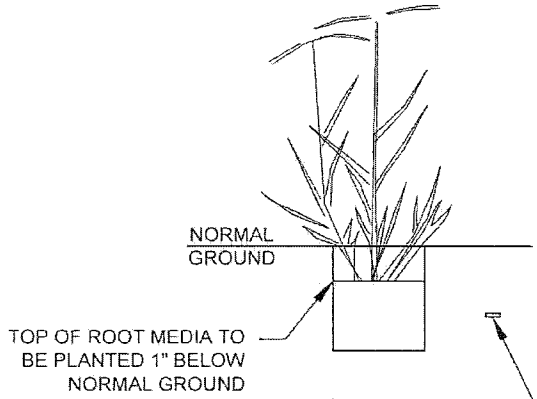

TYPICAL PLANTING
SEASHORE PASPALUM
4" CONTAINER

NOTES:

1. EXACT LOCATION OF THE PLANTS SHALL BE DETERMINED ON SITE BY CPRA DURING PRE-CONSTRUCTION LAYOUT.
2. NO EQUIPMENT MAY ALTER THE EXISTING CONDITIONS OF THE NEWLY CREATED TERRACE OR DISTURB EXISTING VEGETATION.
3. THE SMOOTH CORDGRASS SHALL BE PLANTED ON THREE FOOT CENTERS IN ROWS.
4. THE PASPALUM SHALL BE PLANTED ON FIVE FOOT CENTERS IN ROWS.

APPLICATION BY: UNITED STATES FISH AND WILDLIFE SERVICE 646 CAJUNDOME BLVD SUITE 400 LAFAYETTE, LA 70508	COASTAL PROTECTION AND RESTORATION AUTHORITY 450 LAUREL STREET BATON ROUGE, LOUISIANA 70801		LOST LAKE MARSH CREATION AND HYDROLOGICAL RESTORATION PROJECT	PLANTING LAYOUT AND DETAIL
			STATE PROJECT NUMBER: TE-72	DATE: OCTOBER 2015
DRAWN BY: SHANE FAUST	DESIGNED BY: S. HAYNES, P.E.	APPROVED BY: RUSS JOFFRION, P.E.	FEDERAL PROJECT NUMBER: TE-72	SHEET 16 OF 28

NO ATTEMPT HAS BEEN MADE BY SIGMA CONSULTING GROUP, INC. TO VERIFY TITLE, ACTUAL LEGAL OWNERSHIPS, SERVITUDES, EASEMENTS, RIGHTS-OF-WAY, OR OTHER BURDENS ON THE PROPERTY.

EXISTING TOPOGRAPHIC SURVEY PERFORMED BY PYBURN & ODOM MCA DATED MAY 2011

DATUM: ALL ELEVATIONS ARE IN NAVD 88 IN US SURVEY FEET. ALL HORIZONTAL COORDINATES ARE IN NAD 83 (LOUISIANA STATE PLANE, SOUTH ZONE) IN US SURVEY FEET. SEE GENERAL NOTES ON SHEET 2 FOR SURVEY CONTROL DATA.

ALL REQUIRED CHANNEL EXCAVATION IS TO BE PLACED ON SITE. REFER TO THE ELEVATION VIEW ON THE FOLLOWING SHEET FOR ADDITIONAL INFORMATION.

NON-VEGETATED WATER BOTTOM		
0.16 AC.	26.6 C.Y.	EXCAVATION
0.16 AC.	13.3 C.Y.	IN-SITU FILL
0.10 AC.	324.4 C.Y.	ROCK/RIPRAP

LEGEND:

- EXISTING CONTOURS
- PROPOSED CONTOURS
- EXISTING TOP OF BANK
- PROPOSED WEIR
- PROPOSED RIPRAP 2' THICK (MIN.)
- EXISTING WEIR TO BE REMOVED

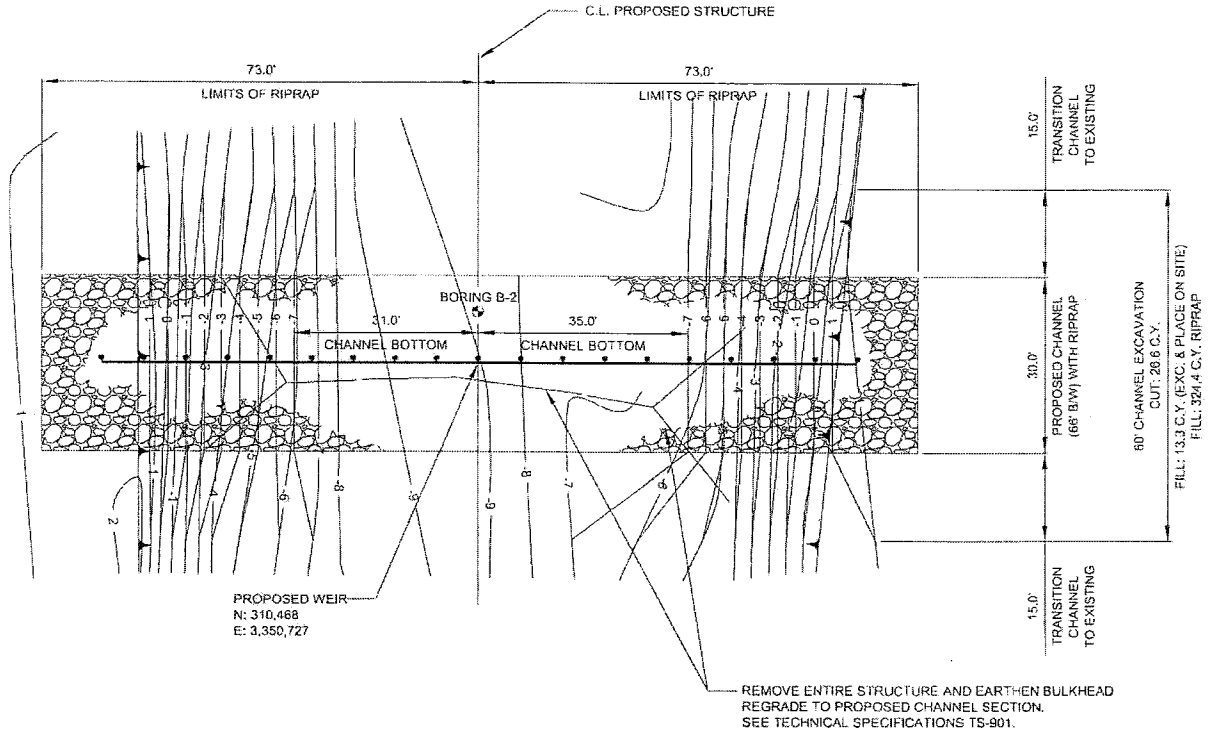

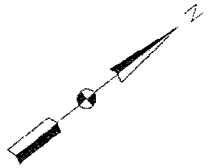

Gregory P. Seymour
NAME
PRELIMINARY
SEE TITLE BLOCK
DATE
P.E. 26669
LICENSE NO.

THIS DOCUMENT IS NOT TO BE USED FOR CONSTRUCTION, BIDDING, RECORDATION, CONVEYANCE, SALES OR AS THE BASIS FOR THE ISSUANCE OF A PERMIT

0 20 40 60
(IN FEET)
SCALE: 1" = 20'

REV	DATE	DESCRIPTION	BY

SIGMA CONSULTING GROUP, INC.
ENGINEERING CONSULTANTS
10585 Airline Highway
Baton Rouge, Louisiana 70816

COASTAL PROTECTION AND RESTORATION AUTHORITY
450 LAUREL STREET
BATON ROUGE, LOUISIANA 70801

DRAWN BY: AMEDIE
DESIGNED BY: SHPEDA

LOST LAKE MARSH CREATION AND HYDROLOGIC RESTORATION

STATE PROJECT NUMBER: TE-72
FEDERAL PROJECT NUMBER: TE-72
APPROVED BY: LEAR

SITE WC-1
PLAN VIEW

DATE: APRIL 2015
SHEET 17 OF 28

SITE NOTES

1. DATUM: ALL ELEVATIONS ARE NAVD 88 IN US FEET

   MHW = +1.44 FT.
   MLW = +0.27 FT.

2. FOR STRUCTURAL DETAILS AND NOTES OF TIMBER PILING, SHEET PILE WALL AND STEEL BAYS, SEE SHEET 27.

3. CHANNEL EXCAVATION SHALL CONFORM TO TECHNICAL SPECIFICATION TS-905.

4. RIPRAP SHALL BE 55 LB. CLASS AND CONFORM TO TECHNICAL SPECIFICATION TS-911.

5. ONE (1) PERMANENT WARNING SIGN SHALL BE INSTALLED ON EACH SIDE OF THE STRUCTURE.

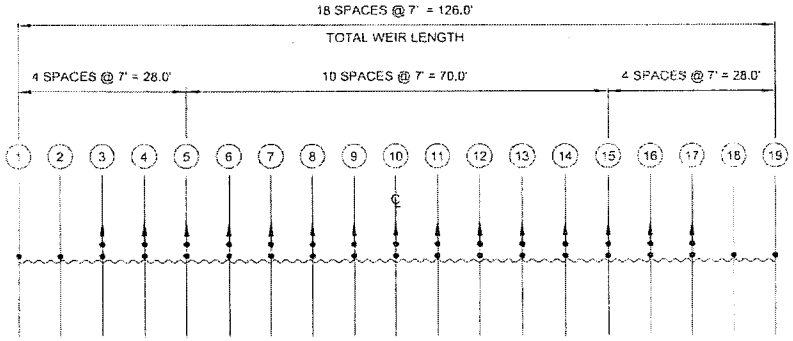

PILE LAYOUT PLAN
SCALE: 1" = 20'

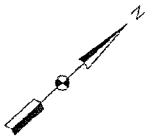

LEGEND:

- VERTICAL PILE
- BATTERED PILE
- CHANNEL EXCAVATION
- IN-SITU FILL

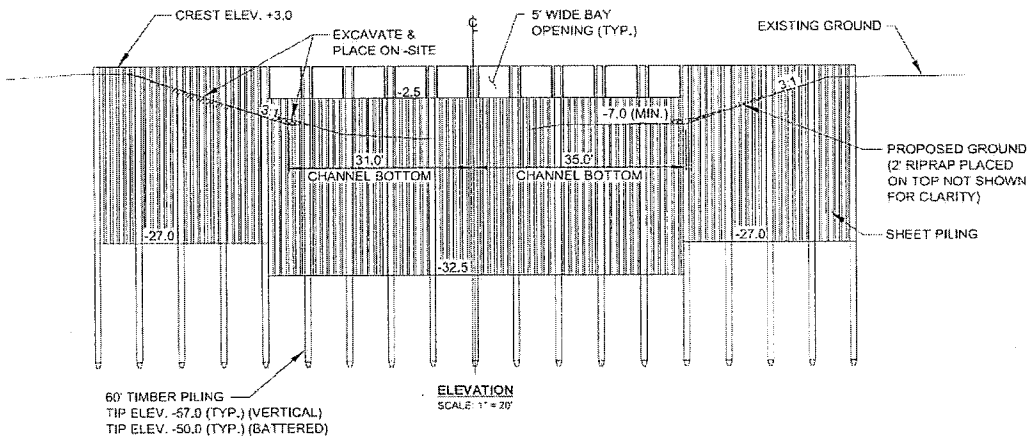

ELEVATION
SCALE: 1" = 20'

Gregory P. Sepeda
NAME
PRELIMINARY
SEE TITLE BLOCK
DATE
P.E. 26669
LICENSE NO.

THIS DOCUMENT IS NOT TO BE USED FOR CONSTRUCTION, BIDDING, RECORDATION, CONVEYANCE, SALES OR AS THE BASIS FOR THE ISSUANCE OF A PERMIT

0 20 40 60
(IN FEET)
SCALE: 1" = 20'

REV	DATE	DESCRIPTION	BY

SIGMA CONSULTING GROUP, INC.
ENGINEERING CONSULTANTS
10305 Airline Highway
Baton Rouge, Louisiana 70816

COASTAL PROTECTION AND RESTORATION AUTHORITY
450 LAUREL STREET
BATON ROUGE, LOUISIANA 70801

LOST LAKE MARSH CREATION AND HYDROLOGIC RESTORATION

SITE WC-1 STRUCTURE DETAIL

STATE PROJECT NUMBER: TE-72

FEDERAL PROJECT NUMBER: TE-72

DATE: APRIL 2015

DRAWN BY: AMEDEE | DESIGNED BY: SEPEDA | APPROVED BY: LEAR

SHEET 18 OF 25

NO ATTEMPT HAS BEEN MADE BY SIGMA CONSULTING GROUP, INC. TO VERIFY TITLE, ACTUAL LEGAL OWNERSHIPS, SERVITUDES, EASEMENTS, RIGHTS-OF-WAY, OR OTHER BURDENS ON THE PROPERTY.

EXISTING TOPOGRAPHIC SURVEY PERFORMED BY PYBURN & ODOM MCA DATED MAY 2011

DATUM: ALL ELEVATIONS ARE IN NAVD 88 IN US SURVEY FEET. ALL HORIZONTAL COORDINATES ARE IN NAD 83 (LOUISIANA STATE PLANE, SOUTH ZONE) IN US SURVEY FEET. SEE GENERAL NOTES ON SHEET 2 FOR SURVEY CONTROL DATA.

ALL REQUIRED CHANNEL EXCAVATION IS TO BE PLACED ON SITE. REFER TO THE ELEVATION VIEW ON THE FOLLOWING SHEET FOR ADDITIONAL INFORMATION.

NON-VEGETATED WATER BOTTOM		
0.06 AC.	16.3 C.Y.	EXCAVATION
0.08 AC.	8.1 C.Y.	IN-SITU FILL
0.05 AC.	154.1 C.Y.	ROCK/RIPRAP

LEGEND:

- EXISTING CONTOURS
- PROPOSED CONTOURS
- EXISTING TOP OF BANK
- PROPOSED WEIR
- PROPOSED RIPRAP 2' THICK (MIN.)
- EXISTING WEIR TO BE REMOVED

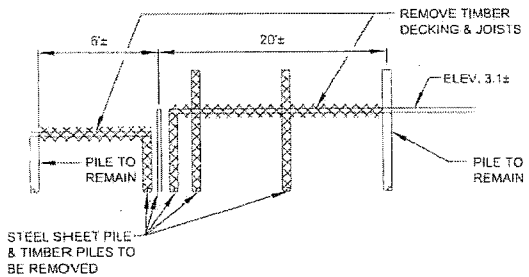

EXISTING PIER SECTION DEMOLITION LIMITS
N.T.S.

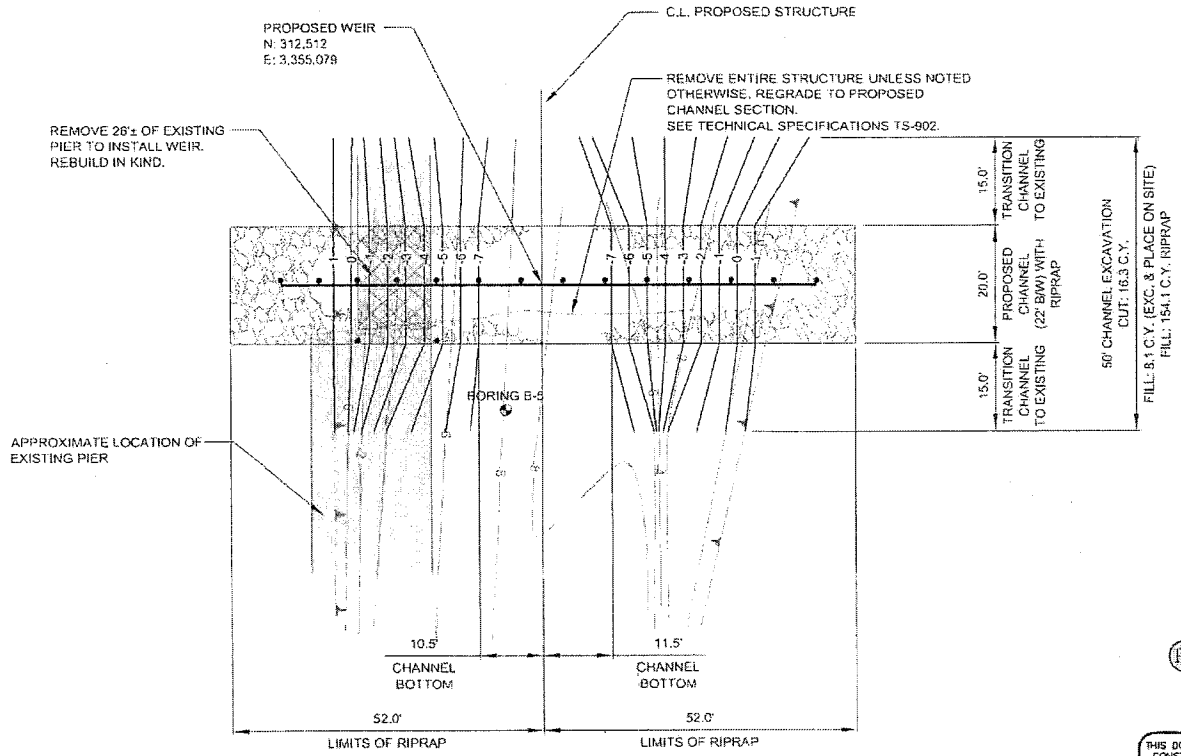

Gregory P. Sepeda
NAME
PRELIMINARY
SEE TITLE BLOCK
DATE
P.E. 28668
LICENSE NO.

THIS DOCUMENT IS NOT TO BE USED FOR CONSTRUCTION, BIDDING, RECORDATION, CONVEYANCE, SALES OR AS THE BASIS FOR THE ISSUANCE OF A PERMIT

0 20 40 60
(IN FEET)
SCALE: 1" = 20'

REV.	DATE	DESCRIPTION	BY

SIGMA CONSULTING GROUP, INC.
ENGINEERING CONSULTANTS
10305 Airline Highway
Baton Rouge, Louisiana 70816

COASTAL PROTECTION AND RESTORATION AUTHORITY
450 LAUREL STREET
BATON ROUGE, LOUISIANA 70801

DRAWN BY: AMEDEE | DESIGNED BY: SEPEDA

LOST LAKE MARSH CREATION AND HYDROLOGIC RESTORATION
STATE PROJECT NUMBER: TE-72
FEDERAL PROJECT NUMBER: TE-72
APPROVED BY: LEAR

SITE WC-4
PLAN VIEW
DATE: APRIL 2013
SHEET 19 OF 28

SITE NOTES

1. DATUM: ALL ELEVATIONS ARE NAVD 88 IN US FEET

   MHW = +1.44 FT.
   MLW = +0.27 FT.

2. FOR STRUCTURAL DETAILS AND NOTES OF TIMBER PILING, SHEET PILE WALL AND STEEL BAYS, SEE SHEET 27.

3. CHANNEL EXCAVATION SHALL CONFORM TO TECHNICAL SPECIFICATION TS-905.

4. RIPRAP SHALL BE 55 LB. CLASS AND CONFORM TO TECHNICAL SPECIFICATION TS-911.

5. ONE (1) PERMANENT WARNING SIGN SHALL BE INSTALLED ON EACH SIDE OF THE STRUCTURE.

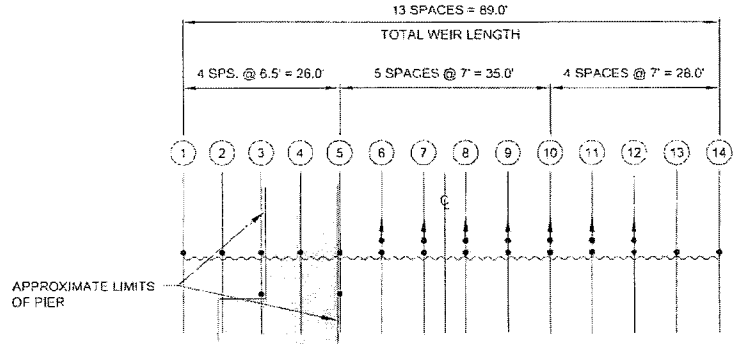

PILE LAYOUT PLAN
SCALE: 1" = 20'

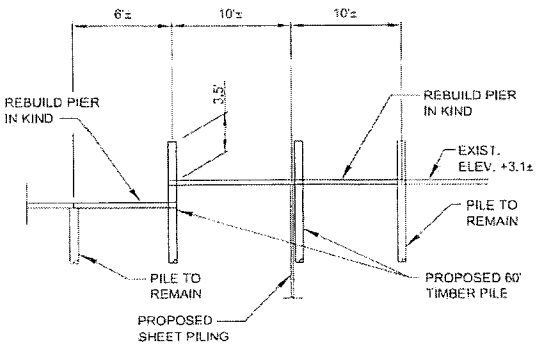

REBUILT PIER SECTION
N.T.S.

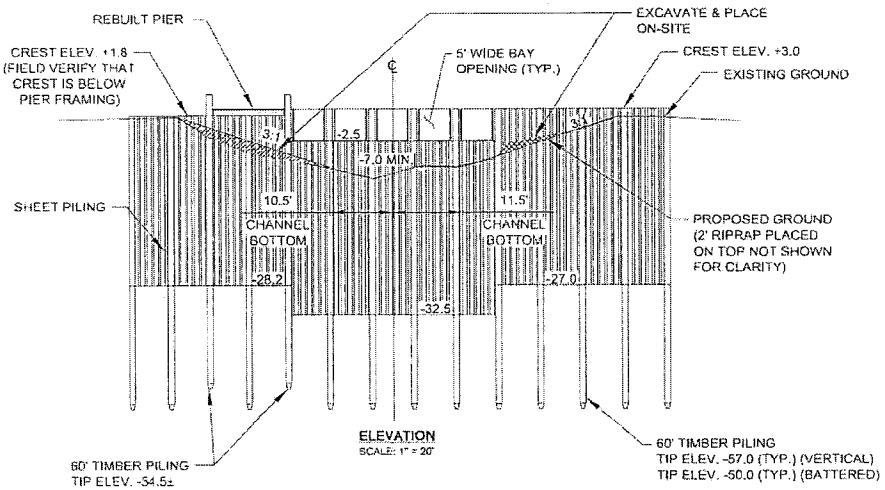

ELEVATION
SCALE: 1" = 20'

LEGEND:

- VERTICAL PILE
- BATTERED PILE
- CHANNEL EXCAVATION
- IN-SITU FILL

Gregory P. Sepeda
NAME
PRELIMINARY
SEE TITLE BLOCK
SIGN
P.E. 25563
LICENSE NO.

THIS DOCUMENT IS NOT TO BE USED FOR CONSTRUCTION, BIDDING, RECORDATION, CONVEYANCE, SALES OR AS THE BASIS FOR THE ISSUANCE OF A PERMIT

0 20 40 60
(IN FEET)
SCALE: 1" = 20'

REV	DATE	DESCRIPTION	BY

SIGMA CONSULTING GROUP, INC.
ENGINEERING CONSULTANTS
10306 Airline Highway
Baton Rouge, Louisiana 70816

COASTAL PROTECTION AND RESTORATION AUTHORITY
450 LAUREL STREET
BATON ROUGE, LOUISIANA 70801

DRAWN BY: AMEDEE | DESIGNED BY: SEPEDA

LOST LAKE MARSH CREATION AND HYDROLOGIC RESTORATION

STATE PROJECT NUMBER: TE-72
FEDERAL PROJECT NUMBER: TE-72
APPROVED BY: LEAR

SITE WC-4
STRUCTURE DETAIL

DATE: APRIL 2015
SHEET 20 OF 28

NO ATTEMPT HAS BEEN MADE BY SIGMA CONSULTING GROUP, INC. TO VERIFY TITLE, ACTUAL LEGAL OWNERSHIPS, SERVITUDES, EASEMENTS, RIGHTS-OF-WAY, OR OTHER BURDENS ON THE PROPERTY.

EXISTING TOPOGRAPHIC SURVEY PERFORMED BY PYBURN & ODOM MCA DATED MAY 2011

DATUM: ALL ELEVATIONS ARE IN NAVD 88 IN US SURVEY FEET. ALL HORIZONTAL COORDINATES ARE IN NAD 83 (LOUISIANA STATE PLANE, SOUTH ZONE) IN US SURVEY FEET. SEE GENERAL NOTES ON SHEET 2 FOR SURVEY CONTROL DATA.

ALL REQUIRED CHANNEL EXCAVATION IS TO BE PLACED ON SITE. REFER TO THE ELEVATION VIEW ON THE FOLLOWING SHEET FOR ADDITIONAL INFORMATION.

NON-VEGETATED WATER BOTTOM		
0.18 AC.	190.0 C.Y.	EXCAVATION
0.18 AC.	95.0 C.Y.	IN-SITU FILL
0.09 AC.	293.3 C.Y.	ROCK/RIPRAP

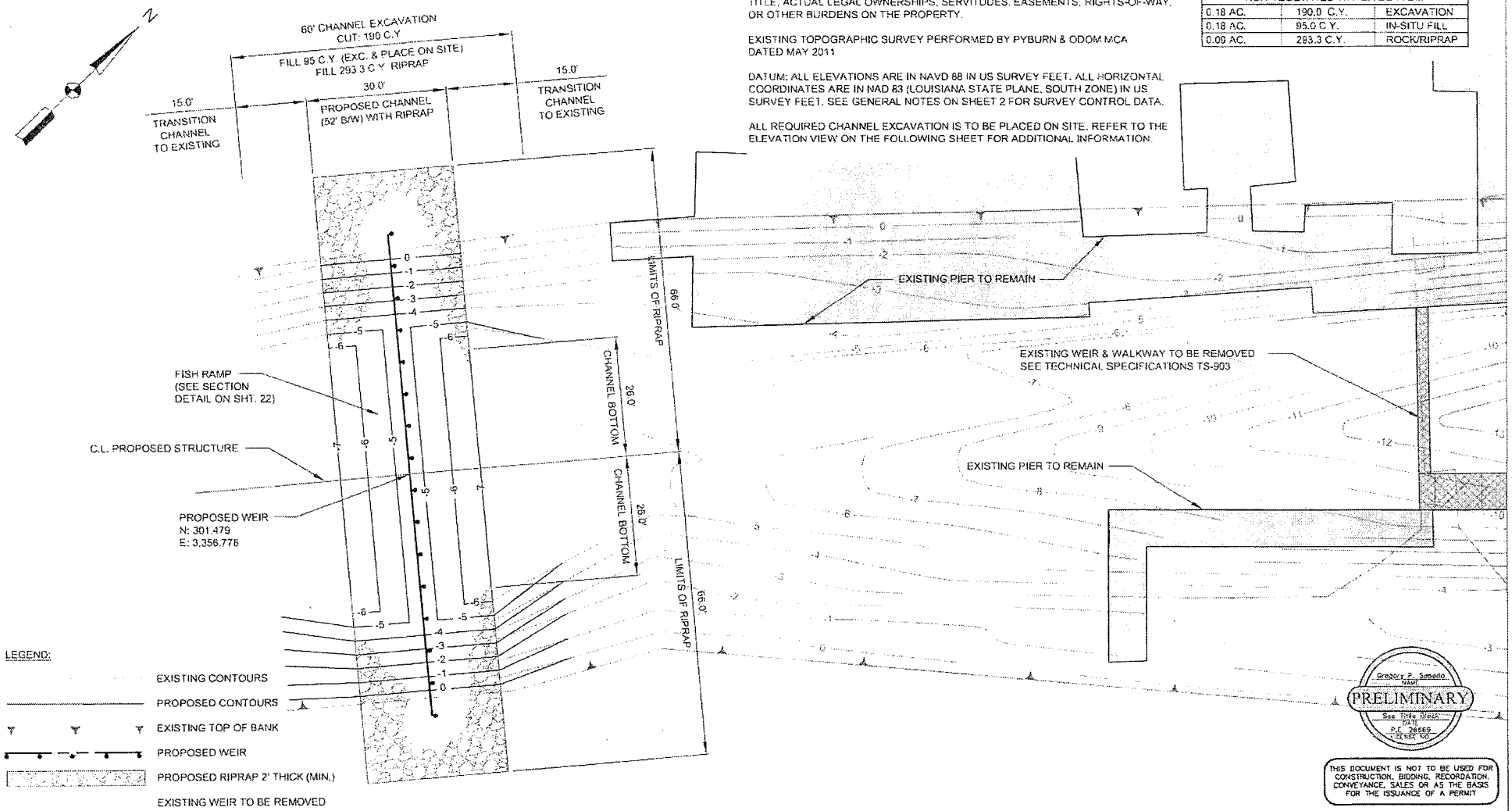

LEGEND:

- EXISTING CONTOURS
- PROPOSED CONTOURS
- EXISTING TOP OF BANK
- PROPOSED WEIR
- PROPOSED RIPRAP 2' THICK (MIN.)
- EXISTING WEIR TO BE REMOVED

0 20 40 60
(IN FEET)
SCALE 1" = 20'

Gregory P. Smedo
NAME
PRELIMINARY
See Title Sheet
DATE
P.E. 26569
LICENSE NO.

THIS DOCUMENT IS NOT TO BE USED FOR CONSTRUCTION, BIDDING, RECORDATION, CONVEYANCE, SALES OR AS THE BASIS FOR THE ISSUANCE OF A PERMIT

REV.	DATE	DESCRIPTION	BY

SIGMA CONSULTING GROUP, INC.
ENGINEERING CONSULTANTS
10305 Airline Highway
Baton Rouge, Louisiana 70816

COASTAL PROTECTION AND RESTORATION AUTHORITY
450 LAUREL STREET
BATON ROUGE, LOUISIANA 70801

LOST LAKE MARSH CREATION AND HYDROLOGIC RESTORATION

STATE PROJECT NUMBER: TE-72
FEDERAL PROJECT NUMBER: TE-72

SITE WC-5
PLAN SHEET

DATE: APRIL 2015

DRAWN BY: AMEDEE | DESIGNED BY: SEPEDA | APPROVED BY: LEAR | SHEET 21 OF 28

SITE NOTES

1. DATUM: ALL ELEVATIONS ARE NAVD 88 IN US FEET

   MHW = +1.44 FT.
   MLW = +0.27 FT.

2. FOR STRUCTURAL DETAILS AND NOTES OF TIMBER PILING, SHEET PILE WALL AND STEEL BAYS, SEE SHEET 27

3. CHANNEL EXCAVATION SHALL CONFORM TO TECHNICAL SPECIFICATION TS-905.

4. RIPRAP SHALL BE 55 LB. CLASS AND CONFORM TO TECHNICAL SPECIFICATION TS-911.

5. ONE (1) PERMANENT WARNING SIGN SHALL BE INSTALLED ON EACH SIDE OF THE STRUCTURE.

LEGEND:

- VERTICAL PILE
- BATTERED PILE
- CHANNEL EXCAVATION
- IN-SITU FILL

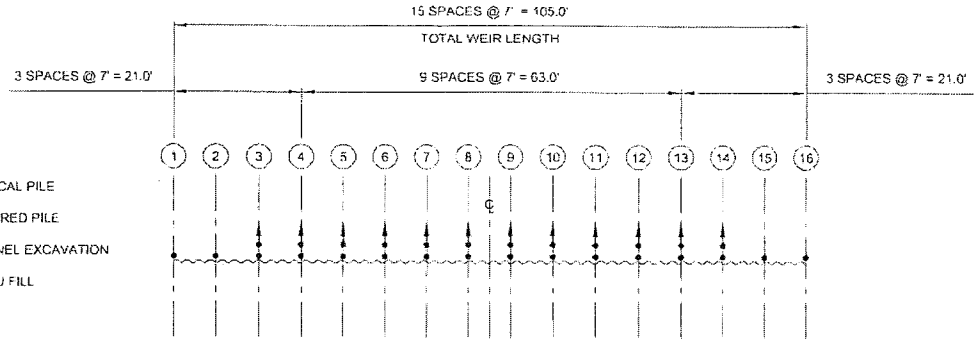

PILE LAYOUT PLAN
SCALE: 1" = 20'

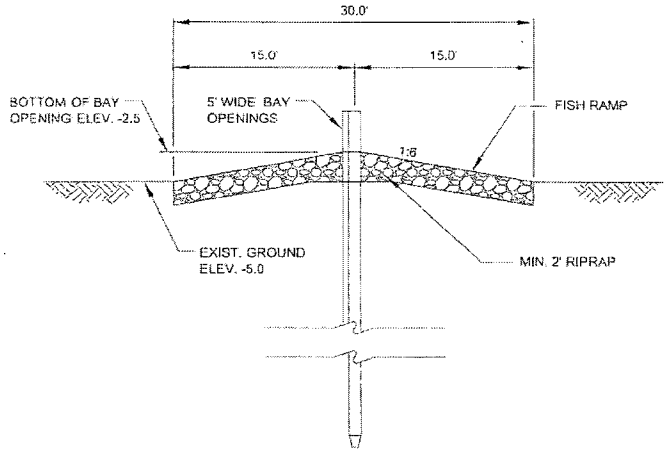

FISH RAMP DETAIL
SECTION "A-A"
SCALE: 1" = 10'

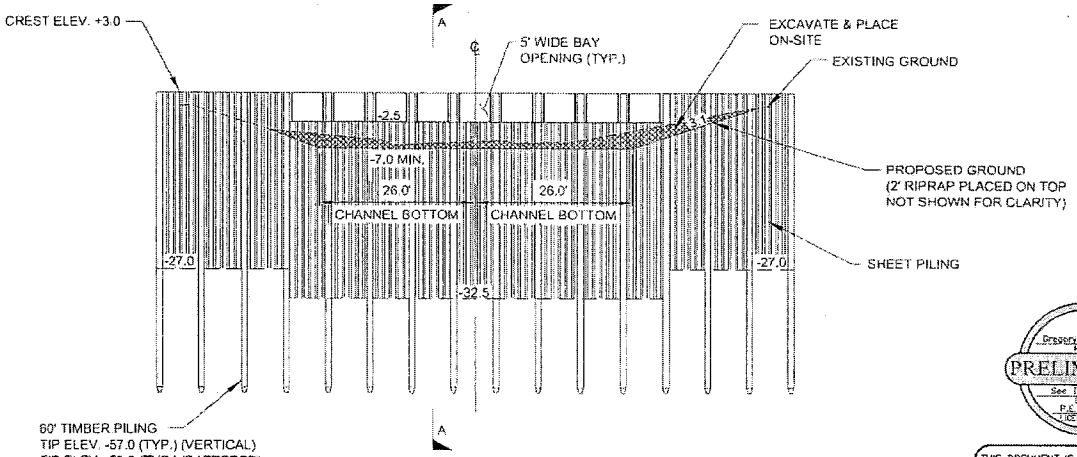

ELEVATION
SCALE: 1" = 20'

Gregory F. Sepeda
NAME
PRELIMINARY
See Title Block
DATE
P.E. 26869
LICENSE NO.

THIS DOCUMENT IS NOT TO BE USED FOR CONSTRUCTION, BIDDING, RECORDATION, CONVEYANCE, SALES OR AS THE BASIS FOR THE ISSUANCE OF A PERMIT

0 20 40 60
(IN FEET)
SCALE: 1" = 20'

REV.	DATE	DESCRIPTION	BY

SIGMA CONSULTING GROUP, INC.
ENGINEERING CONSULTANTS
10305 Airline Highway
Baton Rouge, Louisiana 70816

COASTAL PROTECTION AND RESTORATION AUTHORITY
450 LAUREL STREET
BATON ROUGE, LOUISIANA 70801

DRAWN BY: AMEDEE
DESIGNED BY: SEPEDA

LOST LAKE MARSH CREATION AND HYDROLOGIC RESTORATION

STATE PROJECT NUMBER: TE-72
FEDERAL PROJECT NUMBER: TE-72
APPROVED BY: LEAR

SITE WC-5
STRUCTURE DETAIL

DATE: APRIL 2015
SHEET 22 OF 28

NO ATTEMPT HAS BEEN MADE BY SIGMA CONSULTING GROUP, INC. TO VERIFY TITLE, ACTUAL LEGAL OWNERSHIPS, SERVITUDES, EASEMENTS, RIGHTS-OF-WAY, OR OTHER BURDENS ON THE PROPERTY.

EXISTING TOPOGRAPHIC SURVEY PERFORMED BY PYBURN & ODOM MCA DATED MAY 2011

DATUM: ALL ELEVATIONS ARE IN NAVD 88 IN US SURVEY FEET. ALL HORIZONTAL COORDINATES ARE IN NAD 83 (LOUISIANA STATE PLANE, SOUTH ZONE) IN US SURVEY FEET. SEE GENERAL NOTES ON SHEET 2 FOR SURVEY CONTROL DATA.

ALL REQUIRED CHANNEL EXCAVATION IS TO BE PLACED ON SITE, REFER TO THE ELEVATION VIEW ON THE FOLLOWING SHEET FOR ADDITIONAL INFORMATION.

NON-VEGETATED WATER BOTTOM		
0.75 AC.	866.3 C.Y.	EXCAVATION
0.75 AC.	433.1 C.Y.	IN-SITU FILL
0.12 AC.	373.3 C.Y.	ROCK/RIPRAP

LEGEND:

- EXISTING CONTOURS
- PROPOSED CONTOURS
- EXISTING TOP OF BANK
- PROPOSED WEIR
- PROPOSED RIPRAP 2' THICK (MIN.)
- EXISTING WEIR TO BE REMOVED

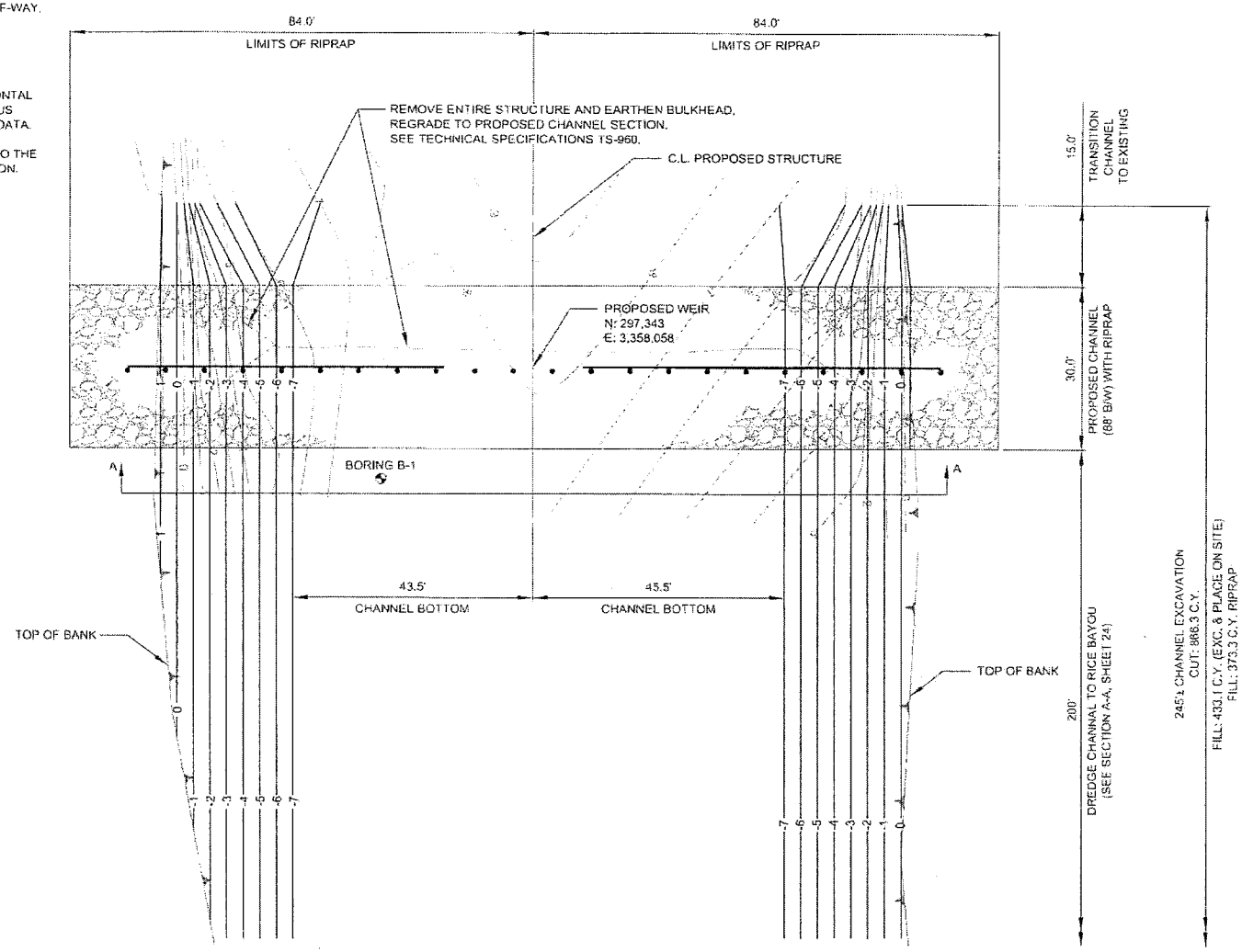

Gregory P. Sepeda
PRELIMINARY
SEE TITLE BLOCK
DATE
P.E. 26669
LICENSE NO.

THIS DOCUMENT IS NOT TO BE USED FOR CONSTRUCTION, BIDDING, RECORDATION, CONVEYANCE, SALES OR AS THE BASIS FOR THE ISSUANCE OF A PERMIT

0 20 40 60
(IN FEET)
SCALE: 1" = 20'

REV	DATE	DESCRIPTION	BY

SIGMA CONSULTING GROUP, INC.
ENGINEERING CONSULTANTS
10305 Airline Highway
Baton Rouge, Louisiana 70816

COASTAL PROTECTION AND RESTORATION AUTHORITY
450 LAUREL STREET
BATON ROUGE, LOUISIANA 70801

DRAWN BY: AMEDEE | DESIGNED BY: SEPEDA

LOST LAKE MARSH CREATION AND HYDROLOGIC RESTORATION
STATE PROJECT NUMBER: TE-72
FEDERAL PROJECT NUMBER: TE-72
APPROVED BY: LEAR

SITE WC-6
PLAN SHEET
DATE: APRIL 2015
SHEET 23 OF 28

SITE NOTES

1. DATUM: ALL ELEVATIONS ARE NAVD 88 IN US FEET

   MHW = +1.44 FT.
   MLW = +0.27 FT.

2. FOR STRUCTURAL DETAILS AND NOTES OF TIMBER PILING, SHEET PILE WALL AND STEEL BAYS, SEE SHEET 27
3. CHANNEL EXCAVATION SHALL CONFORM TO TECHNICAL SPECIFICATION TS-400.
4. RIPRAP SHALL BE 55 LB. CLASS AND CONFORM TO TECHNICAL SPECIFICATION TS-720.
5. ONE (1) PERMANENT WARNING SIGN SHALL BE INSTALLED ON EACH SIDE OF THE STRUCTURE.

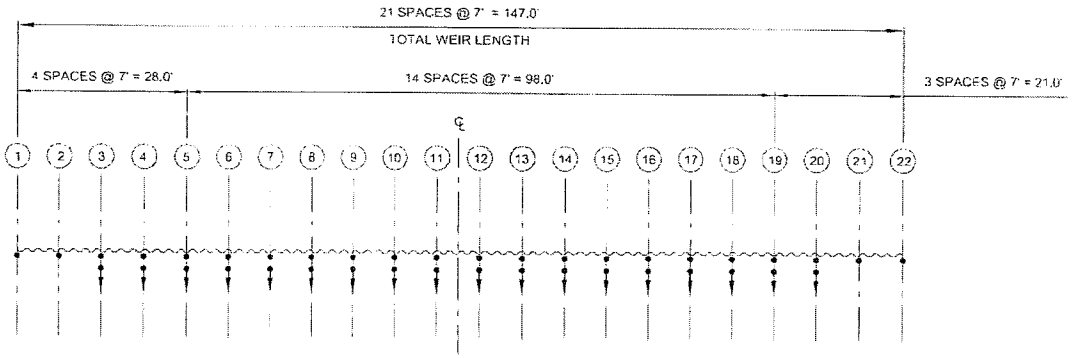

PILE LAYOUT PLAN
SCALE: 1" = 20'

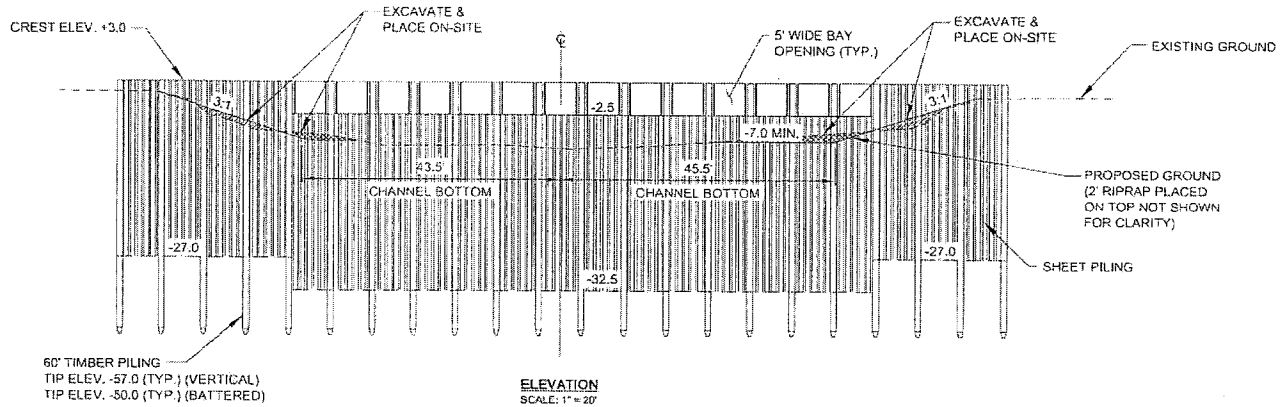

ELEVATION
SCALE: 1" = 20'

LEGEND:

- VERTICAL PILE
- BATTERED PILE
- CHANNEL EXCAVATION
- IN-SITU FILL

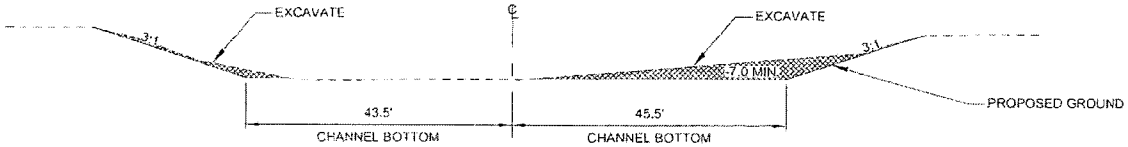

SECTION A-A
SCALE: 1" = 20'

Gregory E. Sepeda
SEAL
PRELIMINARY
SEE TITLE BLOCK
DATE
P.E. 25669
LICENSE NO.

THIS DOCUMENT IS NOT TO BE USED FOR CONSTRUCTION, BIDDING, RECORDATION, CONVEYANCE, SALES OR AS THE BASIS FOR THE ISSUANCE OF A PERMIT

0 20 40 60
(IN FEET)
SCALE: 1" = 20'

REV.	DATE	DESCRIPTION	BY

SIGMA CONSULTING GROUP, INC.
ENGINEERING CONSULTANTS
10305 Airline Highway
Baton Rouge, Louisiana 70816

COASTAL PROTECTION AND RESTORATION AUTHORITY
150 LAUREL STREET
BATON ROUGE, LOUISIANA 70801

DRAWN BY: AMEDEE | DESIGNED BY: SEPEDA

LOST LAKE MARSH CREATION AND HYDROLOGIC RESTORATION

STATE PROJECT NUMBER: TE-72
FEDERAL PROJECT NUMBER: TE-72
APPROVED BY: LEAR

SITE WC-6
STRUCTURE DETAIL

DATE: APRIL 2015
SHEET 24 OF 28

NO ATTEMPT HAS BEEN MADE BY SIGMA CONSULTING GROUP, INC. TO VERIFY TITLE, ACTUAL LEGAL OWNERSHIPS, SERVITUDES, EASEMENTS, RIGHTS-OF-WAY, OR OTHER BURDENS ON THE PROPERTY.

EXISTING TOPOGRAPHIC SURVEY PERFORMED BY SIGMA CONSULTING GROUP, INC. ON AUGUST 21, 2012

DATUM: ALL ELEVATIONS ARE IN NAVD 88 IN US SURVEY FEET. ALL HORIZONTAL COORDINATES ARE IN NAD 83 (LOUISIANA STATE PLANE, SOUTH ZONE) IN US SURVEY FEET. SEE GENERAL NOTES ON SHEET 2 FOR SURVEY CONTROL DATA.

SOIL BORING B-20 MAY BE REFERENCED FOR THIS LOCATION.

ALL REQUIRED CHANNEL EXCAVATION IS TO BE PLACED ON SITE IN AREAS DESIGNATED. REFER TO THE ELEVATION VIEW ON THE FOLLOWING SHEET FOR ADDITIONAL INFORMATION.

NON-VEGETATED WATER BOTTOM		
0.39 AC.	1,190.0 C.Y.	EXCAVATION
0.28 AC.	595.0 C.Y.	IN-SITU FILL
0.08 AC.	244.4 C.Y.	ROCK/RIPRAP

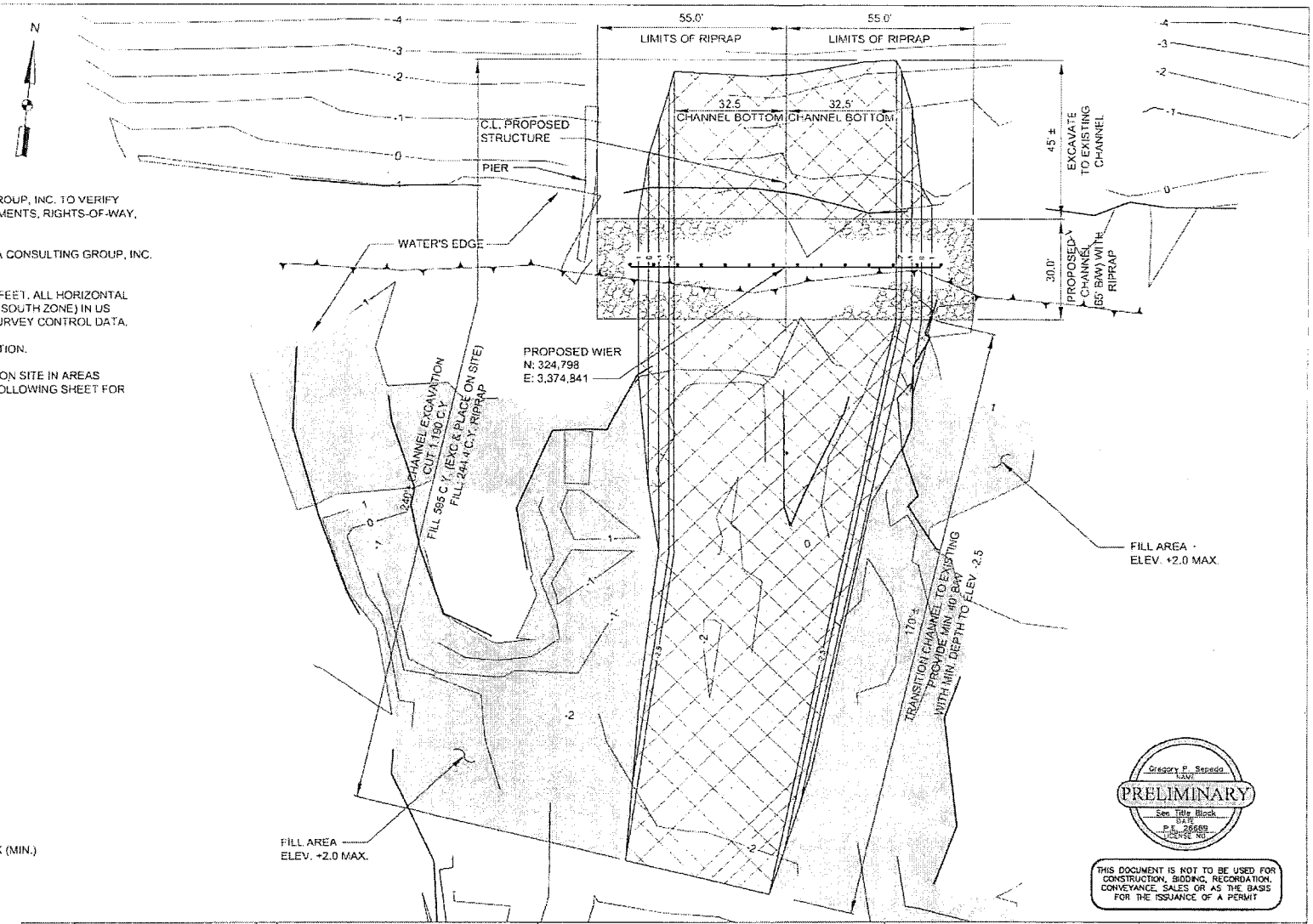

LEGEND:

- EXISTING CONTOURS
- PROPOSED CONTOURS
- EXISTING TOP OF BANK
- PROPOSED WEIR
- PROPOSED RIPRAP 2' THICK (MIN.)
- CHANNEL EXCAVATION
- FILL AREA

0 30 60 90
(IN FEET)
SCALE: 1" = 30'

Gregory P. Sepeda
NAME
PRELIMINARY
See Title Block
DATE
P.E. 26669
LICENSE NO.

THIS DOCUMENT IS NOT TO BE USED FOR CONSTRUCTION, BIDDING, RECORDATION, CONVEYANCE, SALES OR AS THE BASIS FOR THE ISSUANCE OF A PERMIT

REV.	DATE	DESCRIPTION	BY

SIGMA CONSULTING GROUP, INC.
ENGINEERING CONSULTANTS
10305 Airline Highway
Baton Rouge, Louisiana 70816

COASTAL PROTECTION AND RESTORATION AUTHORITY
450 LAUREL STREET
BATON ROUGE, LOUISIANA 70801

DRAWN BY: AMEDEE | DESIGNED BY: SEPEDA

LOST LAKE MARSH CREATION AND HYDROLOGIC RESTORATION

STATE PROJECT NUMBER: TE-72
FEDERAL PROJECT NUMBER: TE-72
APPROVED BY: LEAR

SITE-1 PLAN VIEW

DATE: APRIL 2015
SHEET 25 OF 28

SITE NOTES

1. DATUM: ALL ELEVATIONS ARE NAVD 88 IN US FEET

   MHW = +1.44 FT.
   MLW = +0.27 FT.

2. FOR STRUCTURAL DETAILS AND NOTES OF TIMBER PILING, SHEET PILE WALL AND STEEL BAYS, SEE SHEET 27.

3. CHANNEL EXCAVATION SHALL CONFORM TO TECHNICAL SPECIFICATION TS-905.

4. RIPRAP SHALL BE 55 LB. CLASS AND CONFORM TO TECHNICAL SPECIFICATION TS-911.

5. ONE (1) PERMANENT WARNING SIGN SHALL BE INSTALLED ON EACH SIDE OF THE STRUCTURE

LEGEND:

- VERTICAL PILE
- BATTERED PILE
- CHANNEL EXCAVATION
- IN-SITU FILL

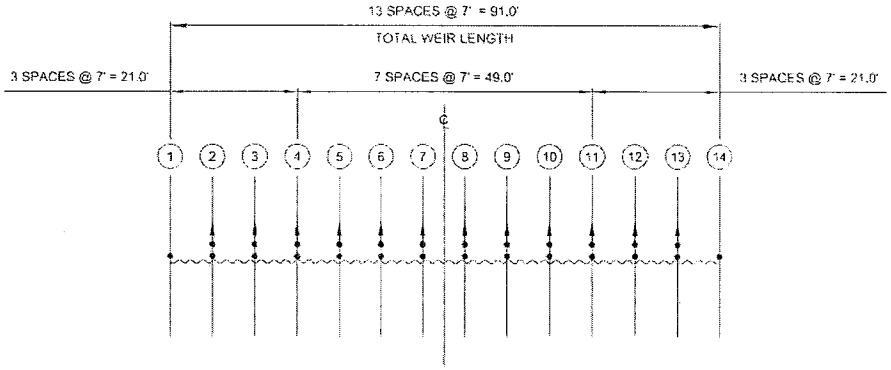

PILE LAYOUT PLAN
SCALE: 1" = 20'

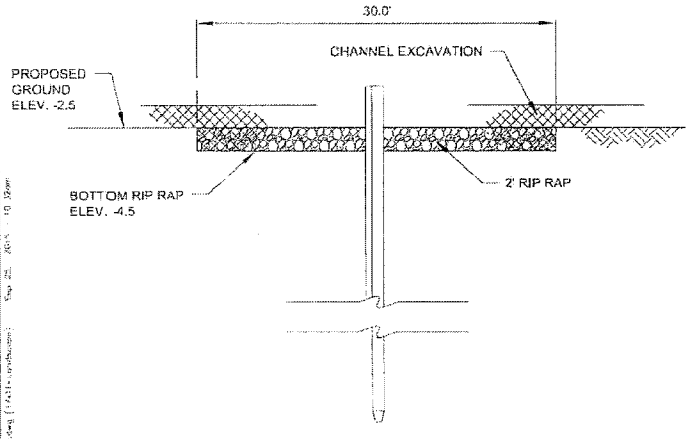

SECTION
SCALE: 1" = 10'

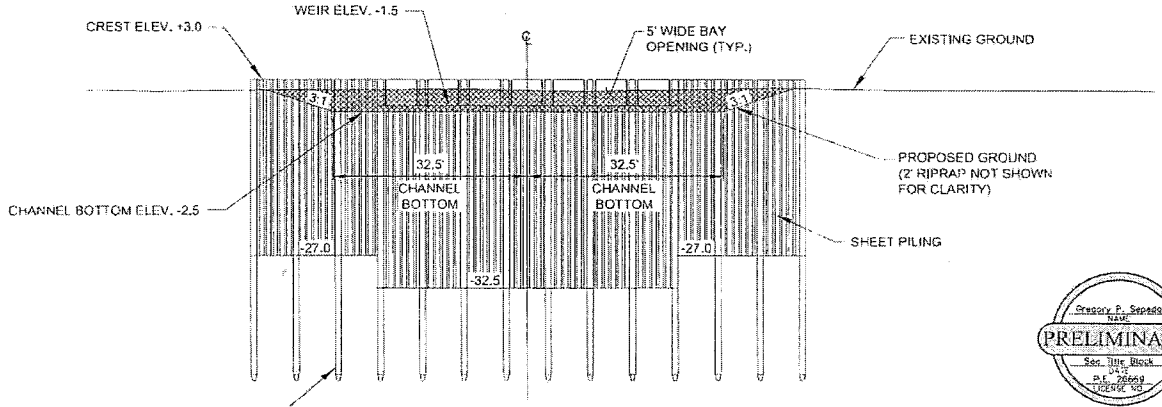

ELEVATION
SCALE: 1" = 20'

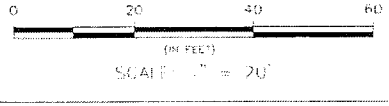

Gregory P. Sepeda
NAME
PRELIMINARY
See Title Block
DATE
P.E. 26669
LICENSE NO.

THIS DOCUMENT IS NOT TO BE USED FOR CONSTRUCTION, BIDDING, RECORDATION, CONVEYANCE, SALES OR AS THE BASIS FOR THE ISSUANCE OF A PERMIT

REV.	DATE	DESCRIPTION	BY

SIGMA CONSULTING GROUP, INC.
ENGINEERING CONSULTANTS
10205 Airline Highway
Baton Rouge, Louisiana 70816

COASTAL PROTECTION AND RESTORATION AUTHORITY
150 LAUREL STREET
BATON ROUGE, LOUISIANA 70801

DRAWN BY: AMEDEE | DESIGNED BY: SEPEDA

LOST LAKE MARSH CREATION AND HYDROLOGIC RESTORATION

STATE PROJECT NUMBER: TE-72
FEDERAL PROJECT NUMBER: TE-72
APPROVED BY: CLAR

SITE -1
STRUCTURE DETAIL

DATE: APRIL 2015
SHEET 26 OF 28

STRUCTURE NOTES:

1. TIMBER PILES SHALL CONFORM TO TECHNICAL SPECIFICATION TS-906. PILES SHALL BE TREATED WITH A CREOSOTE SOLUTION CONFORMING TO AWPA P2 TO A MINIMUM RETENTION OF 20 PCF AND CAPPED.
2. TIMBER PILINGS SHALL BE 60' IN LENGTH WITH A NORMAL 13" DIAMETER BUTT AND 7" MINIMUM DIAMETER AT THE TIP.
3. THE TOP OF THE PILES SHALL BE COATED WITH CREOSOTE OIL PRIOR TO PLACING CAP. THE PILE CAP SHALL BE ATTACHED USING ALUMINUM OR STAINLESS STEEL NAILS.
4. THE WALERS SHALL BE TREATED STRUCTURAL TIMBER AND CONFORM TO TECHNICAL SPECIFICATION TS-908.
5. THE STEEL SHEET PILING SHALL CONFORM TO TECHNICAL SPECIFICATION TS-907.
6. WHEN FIELD DRILLING HOLES IN STEEL PLATES FOR THE WOOD SCREWS, CARE SHOULD BE TAKEN NOT TO PENETRATE THE TIMBER MEMBER MORE THAN ½".

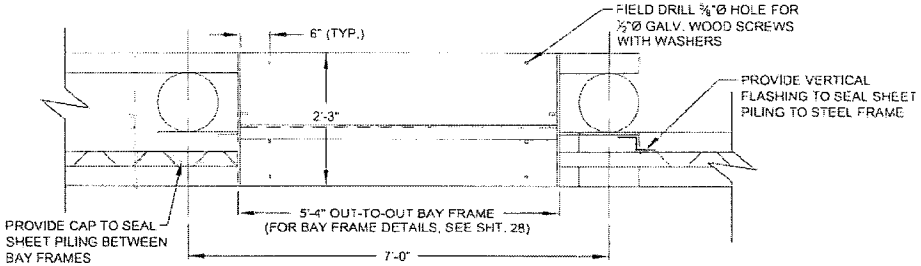

TOP VIEW
(END BAY FRAME)
SCALE: ½" = 1'-0"

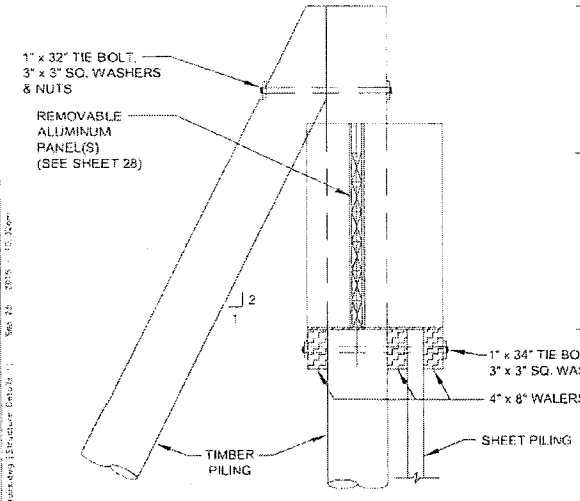

SECTION A-A
SCALE: ½" = 1'-0"

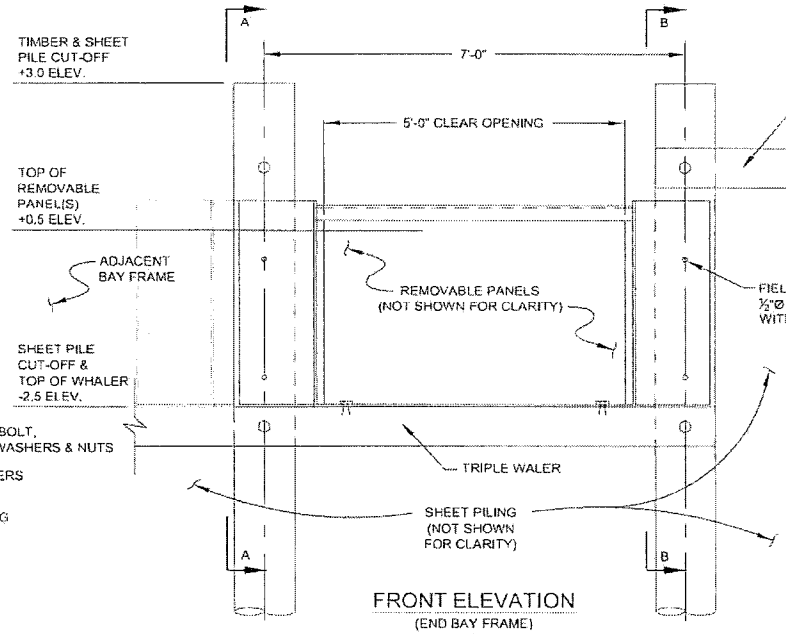

FRONT ELEVATION
(END BAY FRAME)
SCALE: ½" = 1'-0"

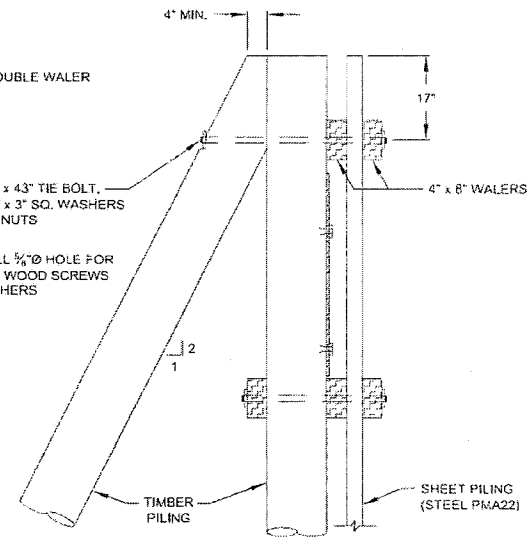

SECTION B-B
SCALE: ½" = 1'-0"

Gregory P. Sepeda
NAME
PRELIMINARY
See Title Block
DATE
P.E. 26469
LICENSE NO.

THIS DOCUMENT IS NOT TO BE USED FOR CONSTRUCTION, BIDDING, RECORDATION, CONVEYANCE, SALES OR AS THE BASIS FOR THE ISSUANCE OF A PERMIT

REV	DATE	DESCRIPTION	BY

SIGMA CONSULTING GROUP, INC.
ENGINEERING CONSULTANTS
10305 Airline Highway
Baton Rouge, Louisiana 70816

COASTAL PROTECTION AND RESTORATION AUTHORITY
450 LAUREL STREET
BATON ROUGE, LOUISIANA 70801

LOST LAKE MARSH CREATION AND HYDROLOGIC RESTORATION

STATE PROJECT NUMBER: TE-72
FEDERAL PROJECT NUMBER: TE-72

TYPICAL DETAILS

DRAWN BY: YARBROUGH | DESIGNED BY: SEPEDA | APPROVED BY: BRASUELL | DATE: APRIL 2015 | SHEET 21 OF 28

STEEL NOTES:

1. ALL STRUCTURAL STEEL WORK SHALL CONFORM TO TECHNICAL SPECIFICATION TS-909.
2. ALL STRUCTURAL STEEL SHALL BE STRUCTURAL CARBON STEEL (GRADE 36). ALL STEEL SHALL BE HOT-DIPPED GALVANIZED AFTER FABRICATION.
3. ALUMINUM PLANKS SHALL CONFORM TO TECHNICAL SPECIFICATION TS-910.
4. CLEVIS PINS SHALL BE STAINLESS STEEL MATERIAL, AND ARE AT NO DIRECT PAY. PADLOCKS ARE TO BE PROVIDED BY CPRA.

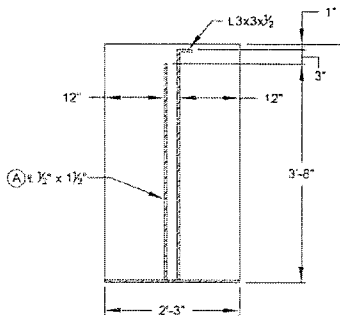

SECTION A-A
SCALE: ½" = 1'-0"

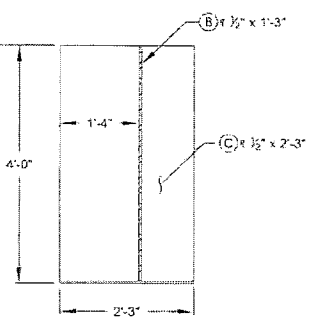

SECTION B-B
SCALE: ½" = 1'-0"

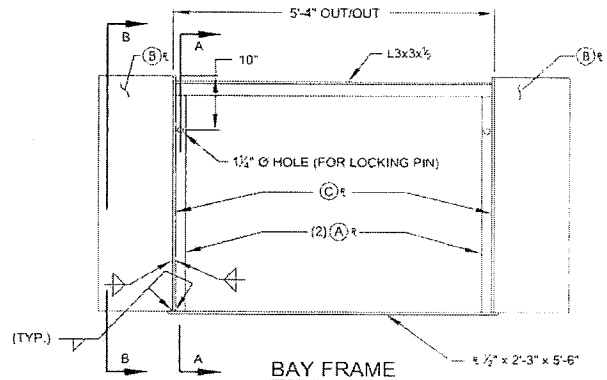

BAY FRAME
FRONT ELEVATION
SCALE: ½" = 1'-0"

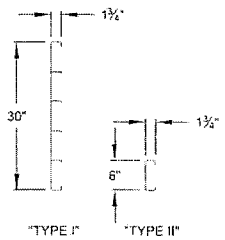

ALUMINUM PLANKS
N.T.S.
(ONE TYPE I & TYPE II REQUIRED PER EACH BAY)

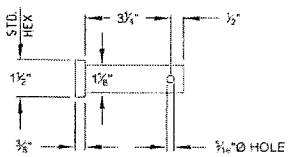

CLEVIS LOCKING PIN
N.T.S.
(2 PINS REQUIRED PER BAY)

Gregory P. Sepeda
NAME
PRELIMINARY
Sec Title Block
DATE
P.E. 26869
LICENSE NO.

THIS DOCUMENT IS NOT TO BE USED FOR CONSTRUCTION, BIDDING, RECORDATION, CONVEYANCE, SALES OR AS THE BASIS FOR THE ISSUANCE OF A PERMIT

REV	DATE	DESCRIPTION	BY

SIGMA CONSULTING GROUP, INC.
ENGINEERING CONSULTANTS
10305 Airline Highway
Baton Rouge, Louisiana 70816

COASTAL PROTECTION AND RESTORATION AUTHORITY
450 LAUREL STREET
BATON ROUGE, LOUISIANA 70801

DRAWN BY: VARBROUGH | DESIGNED BY: SEPEDA

LOST LAKE MARSH CREATION AND HYDROLOGIC RESTORATION
STATE PROJECT NUMBER: TE-72
FEDERAL PROJECT NUMBER: TE-72
APPROVED BY: BRASUELL

TYPICAL DETAILS
DATE: APRIL 2015
SHEET 28 OF 28